APPENDIX A CONNECTION ASSESSMENT

AESO Engineering Connection Assessment

Paintearth Wind Farm Connection

AESO Project Number: 1704

Role	Name	Date	Signature
Prepared:	For Jahnavi Gopi Krishnan, E.I.T. Peter Macleod, P. Eng	Dec. 15/2017 Dec. 15, 2017	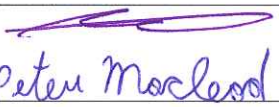
Reviewed:	Maz Mazadi, PhD., P. Eng.	Dec 15 2017	
Approved:	Mohamed Kamh, Manager, Projects and System Access Studies, PhD., P. Eng.	Dec. 15 2017	

Version: V1

Engineering Stamp



Dec 15, 2017

APEGA Permit - Practice P-08200

MK Dec. 15 2017

2500, 330-5th Avenue SW, Calgary, Alberta T2P 0L4 Phone: 403-539-2450 Fax: 403-539-2949
www.aeso.ca www.poweringalberta.com

Note:

The conclusion and recommendations stated in this Report are based on results listed in the Connection Assessment Results report prepared by a third party as part of the AESO's connection process (Attachment A of this report).

The AESO has reviewed the Connection Assessment Results Report, and finds it acceptable for the purpose of assessing potential impacts of the proposed connection on the transmission system.

Contents

1. Introduction 5
1.1. Project Overview 5
2. Assessment Scope 6
2.1. Objectives 6
2.2. Study Area 6
3. Connection Alternatives 7
3.1. Connection Alternatives Identified 7
3.2. Connection Alternatives Selected for Further Studies 8
3.3. Connection Alternatives Not Selected for Further Studies 8
4. Assessment Approach 9
4.1. Standards, Criteria, and Assumptions 9
4.2. Studies Performed 9
4.2.1. Power Flow Studies 10
4.2.2. Transient Stability Studies 10
4.2.3. Short-Circuit Studies 10
4.3. Mitigation Measure Development and Evaluation 10
4.3.1. Post-Mitigation Studies 11
4.3.2. Constraint Effective Factor Studies 11
5. Interpretation of Results 12
5.1. Results Overview 12
5.2. Case A - Without the Planned Irma Wind Power Project 13
5.2.1. Pre-Project Studies Results 13
5.2.2. Post-Project Studies Results 13
5.3. Case B - With Planned Irma Wind Power Project 19
5.3.1. Pre-Project Studies Results 19
5.3.2. Post-Project Studies Results 19
5.4. Mitigation Measures 25
5.4.1. Case A - Without the Planned Irma Wind Power Project 25
5.4.2. Case B - With the Planned Irma Wind Power Project 25
5.5. Post-Mitigation Studies Results 25
5.5.1. Case A - Without the Planned Irma Wind Power Project 25
5.5.2. Case B - With the Planned Irma Wind Power Project 26
6. Project Dependencies 27
7. Conclusions and Recommendations 28

Attachments

Attachment A Engineering Connection Assessment Results

Tables

Table 4-1: List of the Connection Study Scenarios 9

Table 5-1: Updated Thermal Ratings for Key Transmission Lines in the Study Area 12

Table 5-2: Summary of Reliability Criteria Violations, Project Impact and Mitigation Measures for Case A 14

Table 5-3: Summary of Reliability Criteria Violations, Project Impact and Mitigation Measures for Case B 20

1. Introduction

This AESO Engineering Connection Assessment report describes the engineering studies that were completed to assess the impact of the Project (as defined below) on the performance of the Alberta interconnected electric system (AIES). This report also provides the AESO's conclusions and recommendations based on the results of the engineering studies.

Attached to this report are the results of the engineering studies (see Attachment A) and the scope and methodology used to perform the studies (see Attachment A1 to Attachment A7). These attachments provide details regarding the technical criteria, assumptions, and methods for performing these engineering studies, and the results of the engineering studies.

1.1. Project Overview

Paintearth Wind Project Limited Partnership (Market Participant) has submitted a request for system access service to the Alberta Electric System Operator (AESO) to connect its proposed Paintearth Wind Project (Facility) to the AIES. The Facility is a 150 MW wind aggregated facility, and includes a proposed collector station, to be designated Lanes Lake 973S substation. The Facility will be located in the AESO planning area of Hanna (Area 42).

The Market Participant's request includes: a request for a Rate STS, *Supply Transmission Service*, contract capacity of 150 MW; a request for a Rate DTS, *Demand Transmission Service*, contract capacity of 1.0 MW for new system access service in the area; and a request for transmission development (collectively, the Project).

The scheduled in-service date (ISD) for the Project is July 1, 2019.

2. Assessment Scope

2.1. Objectives

The objectives of the AESO Engineering Connection Assessment are as follows:

- Assess the impact of the Project on the performance of the AIES
- Evaluate Project connection alternatives and identify the AESO's preferred alternative
- Recommend mitigation measures, if required, to reliably connect the Project to the AIES
- Identify project dependencies, including any legal owner of transmission facilities (TFO) projects or AESO plans to expand or enhance the transmission system that must be completed prior to connection.

2.2. Study Area

The Study Area for the Project consists of the AESO Planning areas of Hanna (Area 42), Alliance/Battle River (Area 36), Vegreville (Area 56), Wainwright (Area 32), Lloydminster (Area 13), Provost (Area 37) and Sheerness (Area 43), including the tie lines connecting these planning areas to the rest of the AIES. All transmission facilities within the Study Area will be studied and monitored for violations of the Reliability Criteria (defined in Section 3.1 of Attachment A1).

3. Connection Alternatives

The AESO, in consultation with the TFO in the Study Area and the Market Participant, examined two transmission alternatives to meet the Market Participant's request for system access service.

3.1. Connection Alternatives Identified

Below is a description of the developments associated with the transmission alternatives that were examined for the Project.

Alternative 1 – In-and-out connection to the 240 kV transmission line 9L59

This alternative includes the following developments:

- Add a new 240 kV substation with three 240 kV breakers;
- Add two 240 kV circuits to connect the proposed 240 kV substation to the existing 240 kV transmission line 9L59 (between the Tinchebray 972S and the Anderson 801S substations) using an in-and-out configuration;
- Add a 240 kV circuit, at least 15 km[1] in length, to connect the Facility to the proposed 240 kV substation using a radial configuration; and
- Add or modify associated equipment as required for the above transmission developments.

Alternative 2 – In-and-out connection to the 240 kV transmission line 9L93

This alternative includes the following developments:

- Add a new substation, to be designated as Pioneer 805S substation, with two 240 kV circuit breakers;
- Add two 240 kV circuits to connect the Pioneer 805S substation to the existing 9L93 (between the Tinchebray 972S and the Halkirk 615S substations) using an in-and-out configuration;
- Add a 240 kV circuit, approximately 12 km[1] in length, to connect the Facility to the Pioneer 805S substation using a radial connection; and
- Add or modify associated equipment as required for the above transmission developments.

[1] Exact line length to be determined by the TFO

3.2. Connection Alternatives Selected for Further Studies

Alternative 2 is considered technically feasible and was selected for further study.

3.3. Connection Alternatives Not Selected for Further Studies

Alternative 1 would involve increased transmission development, and hence overall increased cost compared to Alternative 2. Therefore, Alternative 1 was not selected for further study.

4. Assessment Approach

4.1. Standards, Criteria, and Assumptions

A detailed description of the standards, criteria, and assumptions that were used for the connection assessment can be found in Attachment A1.

4.2. Studies Performed

The scheduled ISD for the Project is July 1, 2019. Therefore, the studies were performed using the 2019 summer light (SL), summer peak (SP), and winter peak (WP) scenarios. The short-circuit studies were performed using the 2026 WP scenario.

Table 4-1 provides a list of the study scenarios. The post-Project scenarios reflect the requested Rate STS contract capacity of 150 MW.

Table 4-1: List of the Connection Study Scenarios

Scenario	Year/Season Load	Condition	Project Generation (MW)	System Generation Dispatch Conditions
1	2019 SL	Pre-project	0	High Wind, Economic coal
2	2019 SP	Pre-Project	0	High Wind, Economic coal
3	2019 WP	Pre-project	0	High Wind, Economic coal*
4	2019 SL	Post-Project	150	High Wind, Economic coal
5	2019 SP	Post Project	150	High Wind, Economic coal
6	2019 WP	Post-Project	150	High Wind, Economic coal*
7	2026 WP	Post-Project	150	All generation in the Study Area on

**Note: ***for short circuit studies all generation in the Study Area is assumed in service.

As described in Section 3.3.2 of Attachment A1, two different renewable generation dispatch cases were studied, Case A (without the planned Irma Wind Power Project [2]) and Case B (with the planned Irma Wind Power Project). Two different renewable generation dispatch cases were studied as it was expected that different mitigation measures would be required, depending on whether or not the planned Irma Wind Power Project is connected prior to the connection of the Project.[3]

[2]The *Irma Wind Power Project Connection Needs Identification Document* (NID) was filed with the AUC on August 3, 2017 in Proceeding 22857.

[3] At the time of this filing, the *Irma Wind Power Project* is currently in abeyance in AUC Proceeding 22722. In AUC Letter to Parties re Request for Abeyance (Exhibit 22722-X0084), the Commission stated "Irma has delayed the project in-service date until the latter part of 2020." As a result, the AESO considers the Case A study scenario to be more realistic than Case B.

The AESO Planning Region load forecasts used for the connection studies were based on the *AESO 2016 Long-term Outlook* (2016 LTO). While the AESO has updated its regional forecasts since the connection studies were performed, the use of the current AESO forecast, the *AESO 2017 Long-term Outlook*, would not materially alter the connection study results or affect the conclusions and recommendations in this report.

4.2.1. Power Flow Studies

The purpose of the power flow studies is to identify and quantify any thermal and voltage criteria violations in the Study Area.

In addition, power flow studies are also used to identify point of delivery (POD) low voltage bus voltage deviations beyond the limits listed in Table 3-1 of Attachment A1.[4]

Power flow studies were performed for the 2019 summer light (SL), summer peak (SP) and winter peak (WP) pre-Project and post-Project scenarios for both Case A and Case B.

4.2.2. Transient Stability Studies

The purpose of the transient stability studies is to assess the post-Project stability of the transmission system after three-phase to ground faults are applied on select transmission lines in the Study Area.

Transient stability studies were performed for the 2019 SL, SP and WP post-Project scenarios for both Case A and Case B.

4.2.3. Short-Circuit Studies

The purpose of the short-circuit studies is to determine the expected system short-circuit current levels in the vicinity of the Project.

Short-circuit studies were performed for the 2019 WP pre-Project scenario and for the 2019 WP and 2026 WP post-Project scenarios for Case B.

4.3. Mitigation Measure Development and Evaluation

As contemplated in Section 5 of Attachment A1, mitigation measures were developed to address the system performance issues that were identified in the post-Project scenarios. The studies completed to assess the effectiveness of the mitigation measures are briefly outlined below.

[4] The AESO's desired post-contingency voltage deviations for low voltage busses represent guidelines rather than criteria. A POD bus voltage deviation that exceeds the desired limits shown in Table 3-1 of Attachment A1 does not represent a Reliability Criteria violation. Mitigation measures would not be developed to specifically address POD bus voltage deviations that exceed the desired values in Table 3-1 of Attachment A1.

4.3.1. Post-Mitigation Studies

Power flow studies were performed to assess the impact of the Project on the performance of the AIES following the implementation of the AESO's proposed mitigation measures.

4.3.2. Constraint Effective Factor Studies

Constraint effective factor studies were used to determine the generator- and load- constraint effective factors and to identify the most effective generators or loads to manage the thermal criteria violations that were observed under Category B conditions.

5. Interpretation of Results

5.1. Results Overview

This section provides an assessment of the impact of the Project on the performance of the AIES. An overview of the Reliability Criteria violations observed during the connection assessment studies are provided in the following sections:

- Section 5.2 of this report includes an overview of the pre-Project and post-Project studies results for Case A
- Section 5.3 of this report includes an overview of the pre-Project and post-Project studies results for Case B
- Section 5.4 of this report includes a detailed description of the proposed mitigation measures to address the observed Reliability Criteria violations
- Section 5.5 of this report includes an overview of the post-mitigation studies results

The detailed study results are provided in Attachment A.

Please note that, after the studies were performed, the TFO provided updated thermal ratings for transmission lines 7L127, 7L159 and 9L27, as shown in Table 5-1. The updated transmission line ratings are higher than those used in the studies. Using the new ratings for 7L159 and 9L27 will not impact the study results or the conclusions and recommendations contained herein. The 144 kV transmission line 7L127 thermal rating was updated after the completion of a TFO capital maintenance project. As described in Sections 5.2 and 5.3, this TFO capital maintenance project will mitigate the observed thermal violations on the 144 kV transmission line 7L127.

Table 5-1: Updated Thermal Ratings for Key Transmission Lines in the Study Area

Line ID	Line Description	Voltage Class (kV)	Seasonal Continuous Rating (MVA)		Short-term (Emergency) Rating (MVA)	
			Summer	Winter	Summer	Winter
7L127	Pemukan 932S – Monitor 774S	138	180.2	217.5	180.2	217.5
7L159	Ghost Pine 114S Tap Point - Three Hills 770S	138	109.3[a]	139.0	123.6[a]	150.5
9L27	Cordel 755S - Paintearth 863S	240	399 CT	399 CT	399 CT	399 CT

Notes:
[a] These ratings are identical to the ones in Table 3-10 in Attachment A1.

5.2. Case A - Without the Planned Irma Wind Power Project

This section describes the results of the pre-Project and post-Project studies for Case A. Table 5-2 below provides a summary of all observed Reliability Criteria violations, the Project impact, and proposed mitigation measures for Case A.

5.2.1. Pre-Project Studies Results

Category A condition

No Reliability Criteria violations were observed under the Category A condition for any of the pre-Project scenarios.

Category B conditions

The pre-Project power flow studies identified a number of thermal criteria violations under Category B conditions (i.e., loss of a single system element) for all scenarios. Voltage criteria violations and voltage deviations beyond the limits listed in Table 3-1 of Attachment A1 (hereafter referred to as, point of delivery (POD) bus voltage deviations) was observed following the loss of 648ST1 (Metiskow 648S transformer T1) in the 2019 SP pre-Project scenario. A voltage collapse was observed for the contingency of 648ST1 in the 2019 WP pre-Project scenario. In both scenarios, real-time operational practices are already in place to manage this issue.

5.2.2. Post-Project Studies Results

Category A condition

No Reliability Criteria violations were observed under the Category A condition for any of the pre-Project scenarios.

Category B conditions

The post-Project power flow studies identified a number of thermal criteria violations under Category B conditions for all scenarios studied. No voltage criteria violations or POD bus voltage deviations were observed under Category B conditions. A voltage collapse was observed following the loss of 648ST1 in the 2019 SP and 2019 WP scenarios. However, the Project does not contribute to this voltage collapse. Real-time operational practices are already in place to manage this voltage collapse.

Table 5-2: Summary of Reliability Criteria Violations, Project Impact and Mitigation Measures for Case A

Scenario	Details of Violation (Violation Observed On)	Contingency (System Element Lost)	Project impact	Pre- Project Mitigation Measures	Post- Project Mitigation Measures
2019 SL	7L130 (Vermilion 710S – Kitscoty 705S)	648ST1 (Metiskow 648S Transformer T1)	Marginally increased existing thermal criteria violation	Real-time operational practices	Real-time operational practices
	174L (Bardo 197S – North Holden 395S)	766S901T (Nevis 766S 901T transformer)	Materially increased existing thermal criteria violation	Existing RAS 134	Existing RAS 134
	174L (Bardo 197S – North Holden 395S)	912L/9L912 (Red Deer 63S – Nevis 766S)	Materially increased existing thermal criteria violation	Existing RAS 134	Existing RAS 134
	174L (Bardo 197S – North Holden 395S)	9L20 (Nevis 766S – Cordel 755S)	New thermal criteria violation	N/A	Existing RAS 134
	766S901T (Nevis 766S 901T transformer)		Materially increased existing thermal criteria violation	Planned RAS 139[a]	Modify planned RAS 139[b,c]
	766S901T (Nevis 766S 901T transformer)	9L29 (Oakland 946S – Coyote Lake 963S)	Materially reduced existing thermal criteria violation	Planned RAS 139	Planned RAS 139
	7L159 (Heatburg 948S – Ghost Pine 114S Tap Point)		Materially reduced existing thermal criteria violation	Planned RAS 139	Planned RAS 139
	7L16 (Nevis 766S – Heatburg 948S)		Materially reduced existing thermal criteria violation	Planned RAS 139	Planned RAS 139
	7L85 (Bullpound 803S – Anderson 801S)		Marginally reduced existing thermal criteria violation	Planned RAS 139	Planned RAS 139
	7L85 (Wintering Hills 804S – Bullpound 803S)		Marginally reduced existing thermal criteria violation	Planned RAS 139	Planned RAS 139
	801S901T (Anderson 801S 240/144 kV transformer)		Marginally reduced existing thermal criteria violation	Planned RAS 139	Planned RAS 139
2019 SP	Bull Creek 280S voltage violations	648ST1 (Metiskow 648S Transformer T1)	No impact on existing voltage criteria violations[5]	Real-time operational practices	Real-time operational practices
	Briker 880S voltage violations			Real-time operational practices	Real-time operational practices
	Kitscoty 705S voltage violations			Real-time operational practices	Real-time operational practices
	Hill 751S voltage violations			Real-time operational practices	Real-time operational practices
	Lloydminster 716S voltage violations			Real-time operational practices	Real-time operational practices

[5] The Project does not impact the Reliability Criteria violations observed after the loss of the Metiskow 648S substation transformer T1. Any differences between the pre-Project and post-Project study scenario results under this contingency are attributed to the limits to the precision of PSS/E model.

Scenario	Details of Violation (Violation Observed On)	Contingency (System Element Lost)	Project impact	Pre- Project Mitigation Measures	Post- Project Mitigation Measures
	Killarney Lake 267S voltage violations			Real-time operational practices	Real-time operational practices
	Hayter 277S voltage violations			Real-time operational practices	Real-time operational practices
	Edgerton 899S voltage violations			Real-time operational practices	Real-time operational practices
	Kitscoty 705S voltage violations			Real-time operational practices	Real-time operational practices
	Hill 751S voltage violations			Real-time operational practices	Real-time operational practices
	7L50 (Buffalo Creek 526S to Jarrow 252S Tap Point)	395ST1 (North Holden 395S Transformer T1)	Marginally increased existing thermal criteria violation	Planned RAS 138[d]	Modify planned RAS 138
	749L (Edgerton 899S to Killarney Lake 267S Tap Point)	526ST1 OR 526ST2 (Buffalo Creek 526S Transformer T1 or T2)	Marginally increased existing thermal criteria violation	Real-time operational practices	Real-time operational practices
	7L50 (Buffalo Creek 526S to Jarrow 252S Tap Point)	701L (North Holden 395S to Strome 223S)	Materially increased existing thermal criteria violation	Planned RAS 138	Modify planned RAS 138
	7L129 (Buffalo Creek 526S to Bauer 918S Tap Point)	749L\749AL (Metiskow 648S to Edgerton 899S)	Marginally increased existing thermal criteria violation	Planned RAS 138	Modify planned RAS 138
	7L130 (Vermilion 710S to Kitscoty 705S)		Marginally reduced existing thermal criteria violation	Real-time operational practices	Real-time operational practices
	7L14 (Kitscoty 705S to Hill 751S)		Marginally reduced existing thermal criteria violation	Real-time operational practices	Real-time operational practices
	7L50 (Buffalo Creek 526S to Jarrow 252S Tap Point)		Marginally increased existing thermal criteria violation	Planned RAS 138	Modify planned RAS 138
	701L (North Holden 395S to Strome 223S)	766S901T (Nevis 766S Transformer 901T)	New thermal criteria violation	N/A	Modify planned RAS 138, Real-time operational practices, if necessary
	7L50 (Buffalo Creek 526S to Jarrow 252S Tap Point)		Materially increased existing thermal criteria violation	Planned RAS 138	Modify planned RAS 138
	7L50 (Buffalo Creek 526S to Jarrow 252S Tap Point)	7L42 (Hill 751S to Lloydminster 716S)	Marginally increased existing thermal criteria violation	Planned RAS 138	Modify planned RAS 138
	749L (Edgerton 899S to Killarney Lake 267S Tap Point)	7L50 (Battle River 757S to Jarrow 252S to Buffalo Creek 526S)	Marginally increased existing thermal criteria violation	Real-time operational practices	Real-time operational practices
	749L (Metiskow 648S to Killarney Lake 267S Tap Point)		Marginally increased existing thermal criteria violation	Real-time operational practices	Real-time operational practices
	7L50 (Buffalo Creek 526S to Jarrow 252S Tap Point)	7L701\7LA701\701L (Battle River 757S to Heisler 764S to Strome 223S)	Materially increased existing thermal criteria violation	Planned RAS 138	Modify planned RAS 138

Scenario	Details of Violation (Violation Observed On)	Contingency (System Element Lost)	Project impact	Pre- Project Mitigation Measures	Post- Project Mitigation Measures
	7L130 (Vermilion 710S to Kitscoty 705S)	7L749\749L\7LB749 (Edgerton 899S to Briker 880S to Lloydminster 716S)	Marginally reduced existing thermal criteria violation	Real-time operational practices	Real-time operational practices
	7L50 (Buffalo Creek 526S to Jarrow 252S Tap Point)		Marginally increased existing thermal criteria violation	Planned RAS 138	Modify planned RAS 138
	7L50 (Buffalo Creek 526S to Jarrow 252S Tap Point)	7L77 (North Holden 395S to Vegreville 709S)	Marginally increased existing thermal criteria violation	Planned RAS 138	Modify planned RAS 138
	7L130 (Vermilion 710S to Kitscoty 705S)	899ST3A (Edgerton 899S Transformer T3A)	Marginally reduced existing thermal criteria violation	Real-time operational practices	Real-time operational practices
	7L14 (Kitscoty 705S to Hill 751S)		Marginally reduced existing thermal criteria violation	Real-time operational practices	Real-time operational practices
	7L50 (Buffalo Creek 526S to Jarrow 252S Tap Point)		Marginally increased existing thermal criteria violation	Planned RAS 138	Modify planned RAS 138
	701L (North Holden 395S to Strome 223S)	912L\9L912 (Red Deer 63S to Nevis 766S)	New thermal criteria violation	N/A	Modify planned RAS 138, Real-time operational practices if necessary
	7L50 (Buffalo Creek 526S to Jarrow 252S Tap Point)		Materially increased existing thermal criteria violation	Planned RAS 138	Modify planned RAS 138, Real-time operational practices, if necessary
	7L127 (Monitor 774S to Pemukan 932S)	966L\9L966 (Hansman Lake 650S to Pemukan 932S)	Materially reduced existing thermal criteria violation	7L127 TFO Capital Maintenance Project[e]	7L127 TFO Capital Maintenance Project
	7L224 (Hansman Lake 650S to Monitor 774S)		Materially reduced existing thermal criteria violation	Real-time operational practices	Real-time operational practices
	9L51 (Sedalia 363S to Pemukan 932S)	9L16 (Tinchebray 972S to Cordel 755S)	Materially increased existing thermal criteria violation	Real-time operational practices	Real-time operational practices
	7L50 (Buffalo Creek 526S to Jarrow 252S Tap Point)	9L20 (Nevis 766S to Cordel 755S)	New thermal criteria violation	N/A	Modify planned RAS 138
	766S901T (Nevis 766S Transformer 901T)	9L29 (Oakland 946S to Coyote Lake 963S)	Marginally increased existing thermal criteria violation	Planned RAS 139	Planned RAS 139
	7L159 (Ghost Pine 114S Tap Point to Heatburg 948S)		Marginally increased existing thermal criteria violation	Planned RAS 139	Planned RAS 139
	7L16 (Nevis 766S to Heatburg 948S)		Marginally increased existing thermal criteria violation	Planned RAS 139	Planned RAS 139
	7L85 (Wintering Hills 804S to Bullpound 803S)		Marginally increased existing thermal criteria violation	Planned RAS 139	Planned RAS 139
	701L (North Holden 395S to Strome 223S)	EATL	New thermal criteria violation	N/A	Modify planned RAS 138
	7L50 (Buffalo Creek 526S to Jarrow 252S Tap Point)		Marginally increased existing thermal criteria violation	Planned RAS 138	Modify planned RAS 138, Real-time operational practices, if necessary

Scenario	Details of Violation (Violation Observed On)	Contingency (System Element Lost)	Project impact	Pre- Project Mitigation Measures	Post- Project Mitigation Measures
2019 WP	Voltage collapse	648ST1 (Metiskow 648S Transformer T1)	No impact	Real-time operational practices	Real-time operational practices
	749L (Edgerton 899S - 749L Tap)	526ST1 OR 526ST2 (Buffalo Creek 526S Transformer T1 or T2)	Project materially increased existing thermal violation	Real-time operational practices	Real-time operational practices
	7L130 (Vermilion 710S to Kitscoty 705S)	749L\749AL (Metiskow 648S to Edgerton 899S)	Marginally increased existing thermal criteria violation	Real-time operational practices	Real-time operational practices
	7L50 (Buffalo Creek 526S to Jarrow 252S Tap Point)		Materially increased existing thermal criteria violation	Planned RAS 138	Modify planned RAS 138
	701L (North Holden 395S to Strome 223S)	766S901T (Nevis 766S Transformer 901T)	New thermal criteria violation	N/A	Modify planned RAS 138, Real-time operational practices, if necessary
	701L (Strome 223S to Heisler 764S Tap Point)		New thermal criteria violation	N/A	Modify planned RAS 138, Real-time operational practices, if necessary
	7L50 (Buffalo Creek 526S to Jarrow 252S Tap Point)		New thermal criteria violation	N/A	Modify planned RAS 138
	749L (Edgerton 899S to Killarney Lake 267S Tap Point)	7L129\7LA129 (Buffalo Creek 526S to Vermilion 710S to Bauer 918S)	Materially increased existing thermal criteria violation	Real-time operational practices	Real-time operational practices
	749L (Edgerton 899S to Killarney Lake 267S Tap Point)	7L50 (Battle River 757S to Jarrow 252S to Buffalo Creek 526S)	Materially increased existing thermal criteria violation	Real-time operational practices	Real-time operational practices
	7L749 (Edgerton 899S to PV Tap)		Materially increased existing thermal criteria violation	Real-time operational practices	Real-time operational practices
	7L50 (Buffalo Creek 526S to Jarrow 252S Tap Point)	7L749\749L\7LB749 (Edgerton 899S to Briker 880S to Lloydminster 716S)	New thermal criteria violation	N/A	Modify planned RAS 138
	7L50 (Buffalo Creek 526S to Jarrow 252S Tap Point)	899ST3A (Edgerton 899S Transformer T3A)	New thermal criteria violation	N/A	Modify planned RAS 138
	701L (North Holden 395S to Strome 223S)	912L\9L912 (Red Deer 63S to Nevis 766S)	New thermal criteria violation	N/A	Modify planned RAS 138, Real-time operational practices, if necessary
	701L (Strome 223S to Heisler 764S Tap Point)		New thermal criteria violation	N/A	Modify planned RAS 138, Real-time operational practices, if necessary
	7L50 (Buffalo Creek 526S to Jarrow 252S Tap Point)		New thermal criteria violation	N/A	Modify planned RAS 138
	766S901T (Nevis 766S Transformer 901T)	9L20 (Nevis 766S to Cordel 755S)	Materially increased existing thermal criteria violation	Planned RAS 139	Modify planned RAS 139

Notes:

[a] RAS 139 is an existing RAS (See Section 1.2.2.2 of Attachment A1). Modifications to existing RAS 139 were proposed for the approved Suncor Hand Hills Wind Project and BluEarth Hand Hills Wind Project connections. These modifications to RAS 139 were identified in the approved *Suncor Hand Hills Wind Energy Connection Needs Identification Document (NID)* and the approved *BluEarth Hand Hills Wind Energy Connection NID*, as originally approved by AUC Decision 2482-D01-2015 and Approval 2482-D03-2015 and Approval 2482-D02-2015, respectively. Further modifications to RAS 139 were proposed for the proposed Sharp Hills Wind Farm Connection and identified in the *Sharp Hills Wind Farm Connection NID*, as originally filed with the Commission in AUC Proceeding 23066 and Application 23066-A001. This modified version of RAS 139 is referred to herein as “Planned RAS 139”.

[b] In this table, “Modify” refers to adding the Project to the logic of the respective RAS.

[c] Planned RAS 139 monitors two contingencies: 9L20 and 9L29. The modifications to planned RAS 139 are only for the 9L20 contingency.

[d] RAS 138 is an existing RAS (See Section 1.2.2.2 of Attachment A1). Modifications to existing RAS 138 were proposed for the proposed Sharp Hills Wind Project Connection in the Sharp Hills Wind Farm Connection NID. This modified version of RAS 138 is referred to herein as “Planned RAS 138”.

[e] The 7L127 TFO Capital Maintenance Project was completed after the studies were performed.

Marginally increased refers to a percent loading difference (post-Project percent loading minus pre-Project percent loading) below 3%.

Materially increased refers to a percent loading difference (post-Project percent loading minus pre-Project percent loading) above or equal to 3%.

5.3. Case B - With Planned Irma Wind Power Project

This section describes the results of the pre-Project and post-Project studies for Case B. Table 5-3 below provides a summary of all observed Reliability Criteria violations, the Project impact, and proposed mitigation measures for Case B.

5.3.1. Pre-Project Studies Results

Category A condition

No Reliability Criteria violations were observed under the Category A condition for any of the pre-Project scenarios. The short-circuit fault levels were found to be within the typical capabilities of the nearby facilities.

Category B conditions

The post-Project power flow studies identified a number of thermal criteria violations under Category B conditions for all scenarios. A voltage collapse was observed following the loss of 648ST1 for the 2019 SP and the 2019 WP pre-Project scenarios. Real-time operational practices are already in place to manage this voltage collapse.

5.3.2. Post-Project Studies Results

Category A condition

No Reliability Criteria violations were observed under the Category A condition for any of the pre-Project scenarios.

The post-Project short-circuit fault levels were not significantly higher than pre-Project levels. The long term short circuit levels were found to be within the typical capabilities of the nearby facilities.

Category B conditions

The post-Project power flow studies identified a number of thermal criteria violations under Category B conditions for all scenarios studied. No voltage criteria violations or POD bus voltage deviations were observed under Category B conditions. A voltage collapse was observed following the loss of 648ST1 in 2019 SP and 2019 WP post-Project scenarios. However, the Project does not contribute to this voltage collapse. Real-time operational practices are already in place to mitigate this voltage collapse.

Table 5-3: Summary of Reliability Criteria Violations, Project Impact and Mitigation Measures for Case B

Scenario	Details of Violation (Violation Observed On)	Contingency (System Element Lost)	Project impact	Pre- Project Mitigation measures	Post- Project Mitigation measures
2019 SL	7L130 (Vermilion 710S to Kitscoty 705S)	648ST1 (Metiskow 648S Transformer T1)	Marginally reduced thermal criteria violation	Real-time operational practices	Real-time operational practices
	7L14 (Kitscoty 705S to Hill 751S)		Marginally reduced thermal criteria violation	Real-time operational practices	Real-time operational practices
	174L (Bardo 197S to North Holden 395S)	757S912T (Battle River 757S Transformer 912T)	New thermal criteria violation	N/A	Existing RAS 134
	174L (Bardo 197S to North Holden 395S)	766S901T (Nevis 766S Transformer 901T)	Materially increased existing thermal criteria violation	Existing RAS 134	Existing RAS 134
	701L (North Holden 395S to Strome 223S)		New thermal criteria violation	N/A	Existing RAS 134
	174L (Bardo 197S to North Holden 395S)	912L\9L912 (Red Deer 63S to Nevis 766S)	Materially increased existing thermal criteria violation	Existing RAS 134	Existing RAS 134
	701L (North Holden 395S to Strome 223S)		New thermal criteria violation	N/A	Existing RAS 134
	174L (Bardo 197S to North Holden 395S)	9L20 (Nevis 766S to Cordel 755S)	Materially increased existing thermal criteria violation	Existing RAS 134	Existing RAS 134
	766S901T (Nevis 766S Transformer 901T)		Materially increased existing thermal criteria violation	Planned RAS 139[a]	Modify planned RAS 139[b, c]
	766S901T (Nevis 766S Transformer 901T)	9L29 (Oakland 946S to Coyote Lake 963S)	Marginally reduced thermal criteria violation	Planned RAS 139	Planned RAS 139
	7L159 (Ghost Pine 114S Tap Point to Heatburg 948S)		Marginally reduced thermal criteria violation	Planned RAS 139	Planned RAS 139
	7L16 (Nevis 766S to Heatburg 948S)		Marginally reduced thermal criteria violation	Planned RAS 139	Planned RAS 139
	7L85 (Bullpound 803S to Anderson 801S)		Marginally increased thermal criteria violation	Planned RAS 139	Planned RAS 139
	7L85 (Wintering Hills 804S to Bullpound 803S)		Marginally increased thermal criteria violation	Planned RAS 139	Planned RAS 139
	174L (Bardo 197S to North Holden 395S)	9L46 (Lanfine 959S to Sedalia 363S)	New thermal criteria violation	N/A	Existing RAS 134
	174L (Bardo 197S to North Holden 395S)	9L80 (Battle River 757S to Cordel 755S)	New thermal criteria violation	N/A	Existing RAS 134
2019 SP	Voltage collapse	648ST1 (Metiskow 648S Transformer T1)	No impact	Real-time operational practices	Real-time operational practices
	7L129 (Buffalo Creek 526S to Bauer 918S Tap Point)	296ST1 OR 296ST2 (Rosyth 296S Transformer T1 or T2)	New thermal criteria violation	N/A	Modify planned 7L129 RAS
	7L129 (Buffalo Creek 526S to Bauer 918S Tap Point)	377ST1 (Hardisty 377S Transformer T1)	New thermal criteria violation	N/A	Modify planned 7L129 RAS
	7L129 (Bauer 918S Tap Point to Vermilion 710S)	395ST1 (North Holden 395S Transformer T1)	Materially increased existing thermal criteria violations	Planned 7L129 RAS[d]	Modify planned 7L129 RAS
	7L129 (Buffalo Creek 526S to Bauer 918S Tap Point)		Materially increased existing thermal criteria violations	Planned 7L129 RAS	Modify planned 7L129 RAS
	7L129 (Buffalo Creek 526S to Bauer 918S Tap Point)	51ST3 OR 51ST4 (Wainwright 51S Transformer T3 or T4)	Materially increased existing thermal criteria violations	Planned 7L129 RAS	Modify planned 7L129 RAS
	7L129 (Buffalo Creek 526S to Bauer 918S Tap Point)	650ST1 (Hansman Lake 650S Transformer T1)	New thermal criteria violation	N/A	Modify planned 7L129 RAS
	7L129 (Buffalo Creek 526S to Bauer 918S Tap Point)	681L (Tucuman 478S to Hardisty 377S)	New thermal criteria violation	N/A	Modify planned 7L129 RAS
	7L129 (Bauer 918S Tap Point to Vermilion 710S)	701L (North Holden 395S to Strome 223S)	Materially increased existing thermal criteria violations	Planned 7L129 RAS	Modify planned 7L129 RAS

Scenario	Details of Violation (Violation Observed On)	Contingency (System Element Lost)	Project impact	Pre- Project Mitigation measures	Post- Project Mitigation measures
	7L129 (Buffalo Creek 526S to Bauer 918S Tap Point)		Materially increased existing thermal criteria violations	Planned 7L129 RAS	Modify planned 7L129 RAS
	7L129 (Bauer 918S Tap Point to Vermilion 710S)	749L\749AL (Metiskow 648S to Edgerton 899S)	Materially increased existing thermal criteria violations	Planned 7L129 RAS	Modify planned 7L129 RAS
	7L129 (Buffalo Creek 526S to Bauer 918S Tap Point)		Materially increased existing thermal criteria violations	Planned 7L129 RAS	Modify planned 7L129 RAS
	7L130 (Vermilion 710S to Kitscoty 705S)		Marginally increased thermal criteria violation	Real-time operational practices	Real-time operational practices
	7L14 (Kitscoty 705S to Hill 751S)		Marginally increased thermal criteria violation	Real-time operational practices	Real-time operational practices
	701L (North Holden 395S to Strome 223S)	766S901T (Nevis 766S Transformer 901T)	Materially increased existing thermal criteria violations	Planned 7L129 RAS	Modify planned 7L129 RAS
	701L (Strome 223S to Heisler 764S Tap Point)		Materially increased existing thermal criteria violations	Planned 7L129 RAS	Modify planned 7L129 RAS
	7L129 (Bauer 918S Tap Point to Vermilion 710S)		Materially increased existing thermal criteria violations	Planned 7L129 RAS	Modify planned 7L129 RAS
	7L129 (Buffalo Creek 526S to Bauer 918S Tap Point)		Materially increased existing thermal criteria violations	Planned 7L129 RAS	Modify planned 7L129 RAS
	7L129 (Buffalo Creek 526S to Bauer 918S Tap Point)	769L\769AL (Hardisty 377S to Clipper 656S to Rosyth 296S)	New thermal criteria violation	N/A	Modify planned 7L129 RAS
	7L129 (Bauer 918S Tap Point to Vermilion 710S)	7L42 (Hill 751S to Lloydminster 716S)	Materially increased existing thermal criteria violations	Planned 7L129 RAS	Modify planned 7L129 RAS
	7L129 (Buffalo Creek 526S to Bauer 918S Tap Point)		Materially increased existing thermal criteria violations	Planned 7L129 RAS	Modify planned 7L129 RAS
	7L129 (Bauer 918S Tap Point to Vermilion 710S)	7L701\7LA701\701L (Battle River 757S to Heisler 764S to Strome 223S)	Materially increased existing thermal criteria violations	Planned 7L129 RAS	Modify planned 7L129 RAS
	7L129 (Buffalo Creek 526S to Bauer 918S Tap Point)		Materially increased existing thermal criteria violations	Planned 7L129 RAS	Modify planned 7L129 RAS
	7L129 (Bauer 918S Tap Point to Vermilion 710S)	7L749\749L\7LB749 (Edgerton 899S to Briker 880S to Lloydminster 716S)	Materially increased existing thermal criteria violations	Planned 7L129 RAS	Modify planned 7L129 RAS
	7L129 (Buffalo Creek 526S to Bauer 918S Tap Point)		Materially increased existing thermal criteria violations	Planned 7L129 RAS	Modify planned 7L129 RAS
	7L130 (Vermilion 710S to Kitscoty 705S)		Materially increased existing thermal criteria violations	Real-time operational practices	Real-time operational practices
	7L129 (Bauer 918S Tap Point to Vermilion 710S)	7L77 (North Holden 395S to Vegreville 709S)	New thermal criteria violation	N/A	Modify planned 7L129 RAS
	7L129 (Buffalo Creek 526S to Bauer 918S Tap Point)		Materially increased existing thermal criteria violations	Planned 7L129 RAS	Modify planned 7L129 RAS
	7L129 (Buffalo Creek 526S to Bauer 918S Tap Point)	885L (Hansman Lake 650S to Metiskow 648S)	New thermal criteria violation	N/A	Modify planned 7L129 RAS
	7L129 (Bauer 918S Tap Point to Vermilion 710S)	899ST3A (Edgerton 899S Transformer T3A)	Materially increased existing thermal criteria violations	Planned 7L129 RAS	Modify planned 7L129 RAS
	7L129 (Buffalo Creek 526S to Bauer 918S Tap Point)		Materially increased existing thermal criteria violations	Planned 7L129 RAS	Modify planned 7L129 RAS
	7L130 (Vermilion 710S to Kitscoty 705S)		Marginally increased thermal criteria violation	Real-time operational practices	Real-time operational practices
	7L14 (Kitscoty 705S to Hill 751S)		Marginally increased thermal criteria violation	Real-time operational practices	Real-time operational practices
	701L (North Holden 395S to Strome 223S)	912L\9L912 (Red Deer 63S to Nevis 766S)	New thermal criteria violation	N/A	Modify planned 7L129 RAS

Scenario	Details of Violation (Violation Observed On)	Contingency (System Element Lost)	Project impact	Pre- Project Mitigation measures	Post- Project Mitigation measures
	701L (Strome 223S to Heisler 764S Tap Point)		New thermal criteria violation	N/A	Modify planned 7L129 RAS
	7L129 (Bauer 918S Tap Point to Vermilion 710S)		Materially increased existing thermal criteria violations	Planned 7L129 RAS	Modify planned 7L129 RAS
	7L129 (Buffalo Creek 526S to Bauer 918S Tap Point)		Materially increased existing thermal criteria violations	Planned 7L129 RAS	Modify planned 7L129 RAS
	7L129 (Buffalo Creek 526S to Bauer 918S Tap Point)	954L (Hansman Lake 650S to Metiskow 648S)	New thermal criteria violation	N/A	Modify planned 7L129 RAS
	7L127 (Monitor 774S to Pemukan 932S)	966L\9L966 (Hansman Lake 650S to Pemukan 932S)	Materially reduced existing thermal criteria violation	7L127 TFO Capital Maintenance Project[e]	7L127 TFO Capital Maintenance Project
	9L51 (Sedalia 363S to Pemukan 932S)	9L16 (Tinchebray 972S to Cordel 755S)	Materially increased existing thermal criteria violations	Real-time operational practices	Real-time operational practices
	766S901T (Nevis 766S Transformer 901T)	9L20 (Nevis 766S to Cordel 755S)	New thermal criteria violation	N/A	Modify planned RAS 139
	7L129 (Bauer 918S Tap Point to Vermilion 710S)		Materially increased existing thermal criteria violations	Planned 7L129 RAS	Modify planned 7L129 RAS
	7L129 (Buffalo Creek 526S to Bauer 918S Tap Point)		Materially increased existing thermal criteria violations	Planned 7L129 RAS	Modify planned 7L129 RAS
	766S901T (Nevis 766S Transformer 901T)	9L29 (Oakland 946S to Coyote Lake 963S)	Marginally reduced existing thermal criteria violation	Planned RAS 139	Planned RAS 139
	7L159 (Ghost Pine 114S Tap Point to Heatburg 948S)		Marginally reduced existing thermal criteria violation	Planned RAS 139	Planned RAS 139
	7L16 (Nevis 766S to Heatburg 948S)		Marginally reduced existing thermal criteria violation	Planned RAS 139	Planned RAS 139
	7L85 (Wintering Hills 804S to Bullpound 803S)		Marginally increased existing thermal criteria violation	Planned RAS 139	Planned RAS 139
	7L129 (Buffalo Creek 526S to Bauer 918S Tap Point)	9L46 (Lanfine 959S to Sedalia 363S)	New thermal criteria violation	N/A	Modify planned 7L129 RAS
	7L129 (Buffalo Creek 526S to Bauer 918S Tap Point)	9L933\933L (Ware Junction 132S to Anderson 801S)	New thermal criteria violation	N/A	Modify planned 7L129 RAS
	7L129 (Buffalo Creek 526S to Bauer 918S Tap Point)	9L934\934L (Ware Junction 132S to Anderson 801S)	New thermal criteria violation	N/A	Modify planned 7L129 RAS
	7L129 (Buffalo Creek 526S to Bauer 918S Tap Point)	9L950\950L (Ware Junction 132S to Anderson 801S)	New thermal criteria violation	N/A	Modify planned 7L129 RAS
	701L (North Holden 395S to Strome 223S)	EATL	New thermal criteria violation	N/A	Modify planned 7L129 RAS
	7L129 (Bauer 918S Tap Point to Vermilion 710S)		Materially increased existing thermal criteria violations	Planned 7L129 RAS	Modify planned 7L129 RAS
	7L129 (Buffalo Creek 526S to Bauer 918S Tap Point)		Materially increased existing thermal criteria violations	Planned 7L129 RAS	Modify planned 7L129 RAS
2019 WP	Voltage collapse	648ST1 (Metiskow 648S Transformer T1)	No impact	Real-time operational practices	Real-time operational practices
	7L129 (Bauer 918S Tap Point to Vermilion 710S)	395ST1 (North Holden 395S Transformer T1)	New thermal criteria violation	N/A	Modify planned 7L129 RAS
	7L129 (Buffalo Creek 526S to Bauer 918S Tap Point)		Materially increased existing thermal criteria violations	Planned 7L129 RAS	Modify planned 7L129 RAS
	749L (Edgerton 899S to Killarney Lake 267S Tap Point)	526ST1 OR 526ST2 (Buffalo Creek 526S Transformer T1 or T2)	Materially increased existing thermal criteria violations	Real-time operational practices	Real-time operational practices
	7L129 (Bauer 918S Tap Point to Vermilion 710S)	701L (North Holden 395S to Strome 223S)	New thermal criteria violation	N/A	Modify planned 7L129 RAS

Scenario	Details of Violation (Violation Observed On)	Contingency (System Element Lost)	Project impact	Pre- Project Mitigation measures	Post- Project Mitigation measures
	7L129 (Buffalo Creek 526S to Bauer 918S Tap Point)		Materially increased existing thermal criteria violations	Planned 7L129 RAS	Modify planned 7L129 RAS
	7L129 (Bauer 918S Tap Point to Vermilion 710S)	749L\749AL (Metiskow 648S to Edgerton 899S)	Materially increased existing thermal criteria violations	Planned 7L129 RAS	Modify planned 7L129 RAS
	7L129 (Buffalo Creek 526S to Bauer 918S Tap Point)		Materially increased existing thermal criteria violations	Planned 7L129 RAS	Modify planned 7L129 RAS
	7L130 (Vermilion 710S to Kitscoty 705S)		Marginally increased existing thermal criteria violations	Real-time operational violations	Real-time operational violations
	174L (Bardo 197S to North Holden 395S)	766S901T (Nevis 766S Transformer 901T)	New thermal criteria violation	N/A	Existing RAS 134
	701L (North Holden 395S to Strome 223S)		New thermal criteria violation	N/A	Existing RAS 134
	701L (Strome 223S to Heisler 764S Tap Point)		New thermal criteria violation	N/A	Existing RAS 134
	7L129 (Bauer 918S Tap Point to Vermilion 710S)		Materially increased existing thermal criteria violations	Planned 7L129 RAS	Modify planned 7L129 RAS
	7L129 (Buffalo Creek 526S to Bauer 918S Tap Point)		Materially increased existing thermal criteria violations	Planned 7L129 RAS	Modify planned 7L129 RAS
	749L (Edgerton 899S to Killarney Lake 267S Tap Point)	7L129\7LA129 (Buffalo Creek 526S to Vermilion 710S to Bauer 918S)	Materially increased existing thermal criteria violations	Real-time operational practices	Real-time operational practices
	7L129 (Buffalo Creek 526S to Bauer 918S Tap Point)	7L42 (Hill 751S to Lloydminster 716S)	New thermal criteria violation	N/A	Modify planned 7L129 RAS
	7L129 (Bauer 918S Tap Point to Vermilion 710S)	7L701\7LA701\701L (Battle River 757S to Heisler 764S to Strome 223S)	New thermal criteria violation	N/A	Modify planned 7L129 RAS
	7L129 (Buffalo Creek 526S to Bauer 918S Tap Point)		Materially increased existing thermal criteria violations	Planned 7L129 RAS	Modify planned 7L129 RAS
	7L129 (Bauer 918S Tap Point to Vermilion 710S)	7L749\749L\7LB749 (Edgerton 899S to Briker 880S to Lloydminster 716S)	Materially increased existing thermal criteria violations	Planned 7L129 RAS	Modify planned 7L129 RAS
	7L129 (Buffalo Creek 526S to Bauer 918S Tap Point)		Materially increased existing thermal criteria violations	Planned 7L129 RAS	Modify planned 7L129 RAS
	7L129 (Buffalo Creek 526S to Bauer 918S Tap Point)	7L77 (North Holden 395S to Vegreville 709S)	New thermal criteria violation	N/A	Modify planned 7L129 RAS
	7L129 (Bauer 918S Tap Point to Vermilion 710S)	899ST3A (Edgerton 899S Transformer T3A)	Materially increased existing thermal criteria violations	Planned 7L129 RAS	Modify planned 7L129 RAS
	7L129 (Buffalo Creek 526S to Bauer 918S Tap Point)		Materially increased existing thermal criteria violations	Planned 7L129 RAS	Modify planned 7L129 RAS
	174L (Bardo 197S to North Holden 395S)	912L\9L912 (Red Deer 63S to Nevis 766S)	New thermal criteria violation	N/A	Existing RAS 134
	701L (North Holden 395S to Strome 223S)		New thermal criteria violation	N/A	Existing RAS 134
	701L (Strome 223S to Heisler 764S Tap Point)		New thermal criteria violation	N/A	Existing RAS 134
	7L129 (Bauer 918S Tap Point to Vermilion 710S)		Materially increased existing thermal criteria violations	Planned 7L129 RAS	Modify planned 7L129 RAS
	7L129 (Buffalo Creek 526S to Bauer 918S Tap Point)		Materially increased existing thermal criteria violations	Planned 7L129 RAS	Modify planned 7L129 RAS
	766S901T (Nevis 766S Transformer 901T)	9L20 (Nevis 766S to Cordel 755S)	Materially increased existing thermal criteria violations	Planned RAS 139	Modify planned RAS 139
	7L129 (Bauer 918S Tap Point to Vermilion 710S)		Materially increased existing thermal criteria violations	Planned 7L129 RAS	Modify planned 7L129 RAS

Scenario	Details of Violation (Violation Observed On)	Contingency (System Element Lost)	Project impact	Pre- Project Mitigation measures	Post- Project Mitigation measures
	7L129 (Buffalo Creek 526S to Bauer 918S Tap Point)		Materially increased existing thermal criteria violations	Planned 7L129 RAS	Modify planned 7L129 RAS
	766S901T (Nevis 766S Transformer 901T)	9L29 (Oakland 946S to Coyote Lake 963S)	Marginally reduced existing thermal criteria violation	Planned RAS 139	Planned RAS 139
	7L129 (Bauer 918S Tap Point to Vermilion 710S)	EATL	Materially increased existing thermal criteria violations	Planned 7L129 RAS	Modify planned 7L129 RAS
	7L129 (Buffalo Creek 526S to Bauer 918S Tap Point)	EATL	Materially increased existing thermal criteria violations	Planned 7L129 RAS	Modify planned 7L129 RAS
	912L\9L912 (Red Deer 63S to Nevis 766S)	EATL	New thermal criteria violation	N/A	Modify planned 7L129 RAS

Notes:

[a] RAS 139 is an existing RAS (See Section 1.2.2.2 of Attachment A1). Modifications to existing RAS 139 were proposed for the approved Suncor Hand Hills Wind Project and BluEarth Hand Hills Wind Project connections. These modifications to RAS 139 were identified in the approved *Suncor Hand Hills Wind Energy Connection Needs Identification Document (NID)* and the approved *BluEarth Hand Hills Wind Energy Connection NID*, as originally approved by AUC Decision 2482-D01-2015 and Approval 2482-D03-2015 and Approval 2482-D02-2015, respectively. Further modifications to RAS 139 were proposed for the proposed Sharp Hills Wind Farm Connection and identified in the *Sharp Hills Wind Farm Connection NID*, as originally filed with the Commission in AUC Proceeding 23066 and Application 23066-A001. This modified version of RAS 139 is referred to herein as “Planned RAS 139”.

[b] In this table, “Modify” refers to adding the Project to the logic of the respective RAS.

[c] Planned RAS 139 monitors two contingencies: 9L20 and 9L29. The modifications to planned RAS 139 are only for the 9L20 contingency.

[d] The planned 7L129 RAS was proposed for the proposed Irma Wind Power Project Connection in the *Irma Wind Power Project Connection NID*, as originally filed with the Commission in AUC Proceeding 22857 and Application 22857-A001. Modifications to the planned 7L129 RAS were proposed for the proposed Sharp Hills Wind Project connection in the *Sharp Hills Wind Farm Connection NID*. This modified version of 7L129 RAS is referred to herein as “Planned 7L129 RAS”.

[e] The 7L127 TFO Capital Maintenance Project was completed after the studies were performed.

Marginally increased refers to a percent loading difference (post-Project percent loading minus pre-Project percent loading) below 3%.

Materially increased refers to a percent loading difference (post-Project percent loading minus pre-Project percent loading) above or equal to 3%.

5.4. Mitigation Measures

This section discusses the AESO's proposed mitigation measures to address the system performance issues that were identified in the pre-Project and post-Project scenarios.

5.4.1. Case A - Without the Planned Irma Wind Power Project

Pre-Project

Prior to connection of the Project, some of the observed Reliability Criteria violations can be mitigated by real-time operational practices. The thermal criteria violations observed on the 144 kV transmission line 7L127 can be mitigated by the completed 7L127 TFO capital maintenance project to restore the line ratings on 7L127. The existing RAS 134, planned RAS 138 and planned RAS 139, can be used to mitigate remaining thermal criteria violations.

Post-Project

After connection of the Project, some of the observed Reliability Criteria violations can be mitigated by real-time operational practices. The thermal criteria violations observed on the 144 kV transmission line 7L127 can be mitigated by the completed 7L127 TFO capital maintenance project to restore the line ratings on 7L127. The remaining thermal criteria violations can be mitigated by existing RAS 134, modifications to planned RAS 138, and modifications to planned RAS 139.

5.4.2. Case B - With the Planned Irma Wind Power Project

Pre-Project

Prior to connection of the Project, some of the observed Reliability Criteria violations can be mitigated by real-time operational practices. The thermal criteria violations observed on the 144 kV transmission line 7L127 can be mitigated by the completed 7L127 TFO capital maintenance project to restore the line ratings on 7L127.The remaining thermal criteria violations can be mitigated by existing RAS 134, planned RAS 139 and the planned 7L129 RAS for the Irma Wind Power Project.

Post-Project

After connection of the Project, some of the observed Reliability Criteria violations can be mitigated by real-time operational practices. The thermal criteria violations observed on the 144 kV transmission line 7L127 can be mitigated by the completed 7L127 TFO capital maintenance project to restore the line ratings on 7L127. The remaining thermal criteria violations can be mitigated by existing RAS 134, modifications to planned RAS 139, and modifications to the planned 7L129 RAS.

5.5. Post-Mitigation Studies Results

5.5.1. Case A - Without the Planned Irma Wind Power Project

Category B conditions

After the developed RASs were applied, most of the observed Reliability Criteria violations requiring RASs were effectively mitigated. After RAS action, real-time operational practices were required to fully alleviate certain thermal criteria violations observed on the 138 kV transmission line 701L and 144 kV transmission line 7L701.

5.5.2. Case B - With the Planned Irma Wind Power Project

Category B conditions

After the developed RASs were applied, most of the observed Reliability Criteria violations requiring RASs were effectively mitigated. All remaining violations were be managed using real-time operational practices.

6. Project Dependencies

The Project does not require the completion of any AESO plans to expand or enhance the transmission system prior to connection.

7. Conclusions and Recommendations

Based on the study results, Alternative 2 is technically viable under both generation dispatch cases A and B (i.e., without and with the connection of the Irma Wind Power Project, respectively). The connection assessment identified a number of pre-Project and post-Project system performance issues. Many of these issues can be managed using existing real-time operational practices.

If the Irma Wind Power Project is not connected to the AIES prior to the ISD of the Project, then the following mitigation measures would address the post-Project system performance issues that cannot be managed by real-time operational practices:

- the existing RAS 134,
- modifications to the planned RAS 138,
- modifications to the planned RAS 139, and

Should the Irma Wind Power Project be connected to the AIES prior to the ISD of the Project, then the following mitigation measures would address the post-Project system performance issues that cannot be managed by real-time operational practices:

- the existing RAS 134,
- modifications to the planned RAS 139,
- modifications to the planned 7L129 RAS, and

It is recommended to proceed with the Project using Alternative 2 as the preferred option to respond to the Market Participant's request for system access service. It is also recommended to use real-time operational practices and the mitigations listed above to mitigate the identified system performance issues. With the implementation of the recommended mitigation measures, the connection of the Project will not have an adverse effect on the performance of the AIES.

Alternative 2 involves adding a new substation, to be called Pioneer 805S substation, with two circuit breakers and adding two 240 kV circuits, approximately 100 metres in length each, to connect the proposed Pioneer 805S substation to the existing 240 kV transmission line 9L93 using an in-and-out configuration. Alternative 2 also involves adding one 240 kV circuit, approximately 12 kilometres in length, to connect the Facility (which includes the Market Participant's proposed Lanes Lake 973S substation) to the Pioneer 805S substation using a radial connection.

The conductor used for the 240 kV circuits to connect the Pioneer 805S substation to the existing 240 kV transmission line 9L93 should have a minimum thermal rating similar to that of 9L93. The conductor used to connect the Facility to the Pioneer 805S substation should also have a minimum thermal rating similar to that of the 240 kV transmission line 9L93.

Attachment A

Engineering Connection Assessment Results

Engineering Connection Assessment Results

Paintearth Wind Project Connection

Date: December 13, 2017

Role	Name	Organization	Date	Signature
Prepared:	Mahmud Tariq Rashid, P. Eng.	Teshmont Consultants LP	December 13, 2017	Rashid
Reviewed:	Ashraf Ul Haque, P. Eng.	Teshmont Consultants LP	December 13, 2017	
Approved:	Ashraf Ul Haque, P. Eng.	Teshmont Consultants LP	December 13, 2017	

Version: V1D4

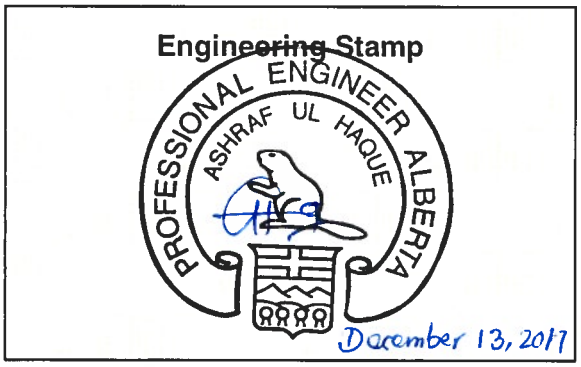

APEGA Permit - Practice: 03012

Contents

1. Introduction 4
2. Pre-Project Study Results 5
2.1. Power Flow Studies 5
2.1.1. 2019 Summer Light Pre-Project Case A 5
2.1.2. 2019 Summer Light Pre-Project Case B 6
2.1.3. 2019 Summer Peak Pre-Project Case A 7
2.1.4. 2019 Summer Peak Pre-Project Case B 11
2.1.5. 2019 Winter Peak Pre-Project Case A 13
2.1.6. 2019 Winter Peak Pre-Project Case B 14
3. Post-Project Study Results 16
3.1. Power Flow Studies 16
3.1.1. 2019 Summer Light Post-Project Case A 16
3.1.2. 2019 Summer Light Post-Project Case B 17
3.1.3. 2019 Summer Peak Post-Project Case A 18
3.1.4. 2019 Summer Peak Post-Project Case B 20
3.1.5. 2019 Winter Peak Post-Project Case A 24
3.1.6. 2019 Winter Peak Post-Project Case B 25
3.2. Transient Stability Studies 28
4. Short-Circuit Study Results 29
4.1. Pre-Project 29
4.2. Post-Project 29
5. Mitigation Measure Development and Evaluation 31
5.1. Case A 31
5.1.1. Pre-Project 31
5.1.2. Post-Project 32
5.2. Case B 33
5.2.1. Pre-Project 33
5.2.2. Post-Project 34
5.3. Mitigation Measure Evaluation 34
5.3.1. 2019 Summer Light Post-Project Case A 35
5.3.2. 2019 Summer Light Post-Project Case B 35
5.3.3. 2019 Summer Peak Post-Project Case A 36
5.3.4. 2019 Summer Peak Post-Project Case B 38
5.3.5. 2019 Winter Peak Post-Project Case A 41
5.3.6. 2019 Winter Peak Post-Project Case B 42
5.4. Constraint Effective Factors 44

Tables

Table 2-1: Thermal Criteria Violations under Category B Conditions for the 2019 SL Pre-Project Scenario Case A 5
Table 2-2: Thermal Criteria Violations under Category B Conditions for the 2019 SL Pre-Project Scenario Case B 6
Table 2-3: Thermal Criteria Violations under Category B Conditions for the 2019 SP Pre-Project Scenario Case A 7
Table 2-4: Voltage Criteria Violations under Category B Conditions for the 2019 SP Pre-Project Scenario Case A 9

Table 2-5: POD Bus Voltage Deviations under Category B Conditions for the 2019 SP Pre-Project Scenario Case A 10
Table 2-6: Thermal Criteria Violations under Category B Conditions for the 2019 SP Pre-Project Scenario Case B 11
Table 2-7: Thermal Criteria Violations under Category B Conditions for the 2019 WP Pre-Project Scenario Case A 13
Table 2-8: Thermal Criteria Violations under Category B Conditions for the 2019 WP Pre-Project Scenario Case B 14
Table 3-1: Thermal Criteria Violations under Category B Conditions for the 2019 SL Post-Project Scenario Case A 16
Table 3-2: Thermal Criteria Violations under Category B Conditions for the 2019 SL Post-Project Scenario Case B 17
Table 3-3: Thermal Criteria Violations under Category B Conditions for the 2019 SP Post-Project Scenario Case A 19
Table 3-4: Thermal Criteria Violations under Category B Conditions for the 2019 SP Post-Project Scenario Case B 21
Table 3-5: Thermal Criteria Violations under Category B Conditions for the 2019 WP Post-Project Scenario Case A 24
Table 3-6: Thermal Criteria Violations under Category B Conditions for the 2019 WP Post-Project Scenario Case B 26
Table 3-7: Transient Stability Study Results 28
Table 4-1: Short-Circuit Current Levels for the 2019 WP Pre-Project Scenario Case B 29
Table 4-2: Short-Circuit Current Levels for the 2019 WP Post-Project Scenario Case B 30
Table 4-3: Short-Circuit Current Levels for the 2026 WP Post-Project Scenario Case B 30
Table 5-1: Case A Pre-Project Mitigation Measures 31
Table 5-2: Case A Post-Project Mitigation Measures 32
Table 5-3: Case B Pre-Project Mitigation Measures 33
Table 5-4: Case B Post-Project Mitigation Measures 34
Table 5-5: Post-RAS Power Flow Study Results under certain Category B Conditions for the 2019 SL Post-Project Scenario Case A 35
Table 5-6: Post-RAS Power Flow Study Results under certain Category B Conditions for the 2019 SL Post-Project Scenario Case B 36
Table 5-7: Post-RAS Power Flow Study Results under certain Category B Conditions for the 2019 SP Post-Project Scenario Case A 37
Table 5-8: Post-RAS Power Flow Study Results under certain Category B Conditions for the 2019 SP Post-Project Scenario Case B 38
Table 5-9: Post-RAS Power Flow Study Results under certain Category B Conditions for the 2019 WP Post-Project Scenario Case A 41
Table 5-10: Post-RAS Power Flow Study Results under certain Category B Conditions for the 2019 WP Post-Project Scenario Case B 42

Attachments

Attachment A1 AESO Engineering Connection Assessment Scope
Attachment A2 Pre-Project Power Flow Diagrams
Attachment A3 Post-Project Power Flow Diagrams
Attachment A4 Post-Project Transient Stability Diagrams
Attachment A5 Dynamic Data and Assumptions of All Equipment Proposed for Connection
Attachment A6 Post-Mitigation Power Flow Diagrams
Attachment A7 Constraint Effective Factors

1. Introduction

This report presents the results of the engineering studies that were completed by Teshmont Consultants LP (the Studies Consultant) to assess the impact of the Project (as defined in Attachment A1: AESO Engineering Connection Assessment Scope) on the performance of the Alberta interconnected electric system (AIES). The studies were performed in accordance with Attachment A1, which was prepared by the Alberta Electric System Operator (AESO). The following sections describe the results of the studies.

The power system network analysis tool that was used for the studies in this connection assessment was PSS/E version 33.

2. Pre-Project Study Results

This section describes the results of the pre-Project power flow studies.

2.1. Power Flow Studies

Power flow diagrams illustrating the pre-Project power flow studies results for the Category A conditions, and the Category B conditions that resulted in Reliability Criteria violations are included in Attachment A2.

2.1.1. 2019 Summer Light Pre-Project Case A[1]

Category A condition

No Reliability Criteria (as defined in Section 3.1.1 of Attachment A1) violations were observed under the Category A condition.

Category B conditions

No voltage criteria violations or voltage deviations beyond the limits listed in Table 3-1 of Attachment A1 (hereafter referred to as, point of delivery (POD) bus voltage deviations) were observed. Thermal criteria violations, both above the seasonal continuous rating and above the short-term (emergency) rating, were observed under certain Category B conditions, as shown in Table 2-1.

Table 2-1: Thermal Criteria Violations under Category B Conditions for the 2019 SL Pre-Project Scenario Case A

Contingency (System Element Lost)	Details of Violation (Violation Observed On)	Seasonal Continuous Rating (MVA)[a]	Short-term (Emergency) Rating (MVA)[a]	Pre-Project Results	
				Power Flow (MVA)	% Loading[b]
9L20 (Nevis 766S - Cordel 755S)	766S901T (Nevis 766S Transformer 901T)	100.0	100.0	103.9	103.9
648ST1 (Metiskow 648S Transformer T1)	7L130 (Vermilion 710S - Kitscoty 705S)	71.9	71.9	72.5	100.8
912L\9L912 (Red Deer 63S - Nevis 766S)	174L (Bardo 197S - North Holden 395S)	85.0	94.0	90.7	106.8

[1] Case A refers to the case without the Irma Wind Power Project (The *Irma Wind Power Project Connection Needs Identification Document* (NID) was filed with the AUC on August 3, 2017 in Proceeding 22857)

Contingency (System Element Lost)	Details of Violation (Violation Observed On)	Seasonal Continuous Rating (MVA)[a]	Short-term (Emergency) Rating (MVA)[a]	Pre-Project Results	
				Power Flow (MVA)	% Loading[b]
9L29 (Oakland 946S - Coyote Lake 963S)	7L159 (Ghost Pine 114S Tap - Heatburg 948S)	109.3	123.6	125.7	115.0
	766S901T (Nevis 766S Transformer 901T)	100.0	100.0	123.1	123.1
	7L16 (Nevis 766S - Heatburg 948S)	109.3	123.6	122.3	111.9
	7L85 (Wintering Hills 804S - Bullpound 803S)	109.3	123.6	134.7	123.2
	7L85 (Bullpound 803S - Anderson 801S)	109.3	123.6	128.6	117.7
	801S901T (Anderson 801S Transformer 901T)	125.0	125.0	126.0	100.8
766S901T (Nevis 766S Transformer 901T)	174L (Bardo 197S - North Holden 395S)	85.0	94.0	90.7	106.7

[a] The facility ratings shown in Attachment A1 have been adjusted from a 144 kV voltage base to a 138 kV voltage base, as is used by the power system network analysis tool.

[b] Reported as a percentage of the observed power flow (in MVA) relative to the transmission line's seasonal continuous rating (also in MVA, as shown in Attachment A1, and then adjusted from a 144 kV voltage base to a 138 kV voltage base).

2.1.2. 2019 Summer Light Pre-Project Case B[2]

Category A condition

No Reliability Criteria violations were observed under the Category A condition.

Category B conditions

No voltage criteria violations or POD bus voltage deviations were observed. Thermal criteria violations, both above the seasonal continuous rating and above the short-term (emergency) rating, were observed under certain Category B conditions, as shown in Table 2-2.

Table 2-2: Thermal Criteria Violations under Category B Conditions for the 2019 SL Pre-Project Scenario Case B

Contingency (System Element Lost)	Details of Violation (Violation Observed On)	Seasonal Continuous Rating (MVA)	Short-term (Emergency) Rating (MVA)	Pre-Project Results	
				Power Flow (MVA)	% Loading
9L20 (Nevis 766S - Cordel 755S)	174L (Bardo 197S - North Holden 395S)	85.0	94.0	106.2	124.9

[2] Case B refers to the case with the Irma Wind Power Project

Contingency (System Element Lost)	Details of Violation (Violation Observed On)	Seasonal Continuous Rating (MVA)	Short-term (Emergency) Rating (MVA)	Pre-Project Results	
				Power Flow (MVA)	% Loading
	766S901T (Nevis 766S Transformer 901T)	100.0	100.0	117.1	117.1
648ST1 (Metiskow 648S Transformer T1)	7L130 (Vermilion 710S - Kitscoty 705S)	71.9	71.9	77.6	107.9
	7L14 (Kitscoty 705S - Hill 751S)	71.9	71.9	73.9	102.7
912L\9L912 (Red Deer 63S - Nevis 766S)	174L (Bardo 197S - North Holden 395S)	85.0	94.0	121.1	142.4
9L29 (Oakland 946S - Coyote Lake 963S)	7L159 (Ghost Pine 114S Tap - Heatburg 948S)	109.3	123.6	123.2	112.7
	766S901T (Nevis 766S Transformer 901T)	100.0	100.0	120.9	120.9
	7L16 (Nevis 766S - Heatburg 948S)	109.3	123.6	119.7	109.5
	7L85 (Wintering Hills 804S - Bullpound 803S)	109.3	123.6	129.8	118.8
	7L85 (Bullpound 803S - Anderson 801S)	109.3	123.6	123.8	113.3
766S901T (Nevis 766S Transformer 901T)	174L (Bardo 197S - North Holden 395S)	85.0	94.0	121.1	142.4

2.1.3. 2019 Summer Peak Pre-Project Case A

Category A condition

No Reliability Criteria violations were observed under the Category A condition.

Category B conditions

Thermal criteria violations, both above the seasonal continuous rating and above the short-term (emergency) rating, were observed under certain Category B conditions, as shown in Table 2-3.

Table 2-3: Thermal Criteria Violations under Category B Conditions for the 2019 SP Pre-Project Scenario Case A

Contingency (System Element Lost)	Details of Violation (Violation Observed On)	Seasonal Continuous Rating (MVA)	Short-term (Emergency) Rating (MVA)	Pre-Project Results	
				Power Flow (MVA)	% Loading
7L42 (Hill 751S - Lloydminster 716S)	7L50 (Buffalo Creek 526S - Jarrow 252S Tap)	109.2	123.6	113.0	103.5

Contingency (System Element Lost)	Details of Violation (Violation Observed On)	Seasonal Continuous Rating (MVA)	Short-term (Emergency) Rating (MVA)	Pre-Project Results	
				Power Flow (MVA)	% Loading
7L749\749L\7LB749 (Edgerton 899S - Briker 880S - Lloydminster 716S)	7L50 (Buffalo Creek 526S – Jarrow 252S Tap)	109.2	123.6	124.1	113.6
	7L130 (Vermilion 710S – Kitscoty 705S)	71.9	71.9	74.1	103.0
7L50 (Battle River 757S – Jarrow 252S – Buffalo Creek 526S)	749L (Metiskow 648S – Killarney Lake 267S Tap)	122.0	134.0	125.1	102.5
	749L (Edgerton 899S – Killarney Lake 267S Tap)	96.0	134.0	100.7	104.9
9L16 (Tinchebray 972S – Cordel 755S)	9L51 (Sedalia 363S – Pemukan 932S)	332.0	432.0	349.4	105.2
7L701\7LA701\701L (Battle River 757S – Heisler 764S – Strome 223S)	7L50 (Buffalo Creek 526S – Jarrow 252S Tap)	109.2	123.6	113.9	104.3
749L\749AL (Metiskow 648S – Edgerton 899S)	7L129 (Buffalo Creek 526S – Bauer 918S Tap)	109.3	123.6	110.7	101.3
	7L50 (Buffalo Creek 526S – Jarrow 252S Tap)	109.2	123.6	130.7	119.7
	7L130 (Vermilion 710S – Kitscoty 705S)	71.9	71.9	82.9	115.3
	7L14 (Kitscoty 705S – Hill 751S)	71.9	71.9	78.1	108.6
966L\9L966 (Hansman Lake 650S – Pemukan 932S)	7L224 (Hansman Lake 650S – Monitor 774S)	109.3	123.6	126.4	115.7
	7L127 (Monitor 774S – Pemukan 932S)	126.5	126.5	153.8	121.5
899ST3A (Edgerton 899S Transformer T3A)	7L50 (Buffalo Creek 526S – Jarrow 252S Tap)	109.2	123.6	126.7	116.0
	7L130 (Vermilion 710S – Kitscoty 705S)	71.9	71.9	78.3	108.9
	7L14 (Kitscoty 705S – Hill 751S)	71.9	71.9	73.5	102.3
648ST1 (Metiskow 648S Transformer T1)	7L129 (Buffalo Creek 526S – Bauer 918S Tap)	109.3	123.6	120.6	110.4
	7L50 (Buffalo Creek 526S – Jarrow 252S Tap)	109.2	123.6	140.8	128.9
	7L129 (Bauer 918S Tap – Vermilion 710S)	109.3	123.6	112.1	102.6

Contingency (System Element Lost)	Details of Violation (Violation Observed On)	Seasonal Continuous Rating (MVA)	Short-term (Emergency) Rating (MVA)	Pre-Project Results	
				Power Flow (MVA)	% Loading
	7L130 (Vermilion 710S – Kitscoty 705S)	71.9	71.9	113.6	158.1
	7L14 (Kitscoty 705S – Hill 751S)	71.9	71.9	108.9	151.4
912L\9L912 (Red Deer 63S – Nevis 766S)	7L50 (Buffalo Creek 526S – Jarrow 252S Tap)	109.2	123.6	115.6	105.8
9L29 (Oakland 946S – Coyote Lake 963S)	7L159 (Ghost Pine 114S Tap – Heatburg 948S)	109.3	123.6	121.1	110.8
	766S901T (Nevis 766S Transformer 901T)	100.0	100.0	100.6	100.6
	7L16 (Nevis 766S – Heatburg 948S)	109.3	123.6	117.0	107.0
	7L85 (Wintering Hills 804S – Bullpound 803S)	109.3	123.6	111.0	101.6
766S901T (Nevis 766S Transformer 901T)	7L50 (Buffalo Creek 526S – Jarrow 252S Tap)	109.2	123.6	115.4	105.7
701L (North Holden 395S – Strome 223S)	7L50 (Buffalo Creek 526S – Jarrow 252S Tap)	109.2	123.6	110.0	100.7
7L77 (North Holden 395S – Vegreville 709S)	7L50 (Buffalo Creek 526S – Jarrow 252S Tap)	109.2	123.6	110.9	101.5
395ST1 (North Holden 395S Transformer T1)	7L50 (Buffalo Creek 526S – Jarrow 252S Tap)	109.2	123.6	116.1	106.3
EATL (Newell 2075S – Heathfield 2029S)	7L50 (Buffalo Creek 526S – Jarrow 252S Tap)	109.2	123.6	122.4	112.1

A voltage criteria violation, below the emergency minimum voltage, was observed under certain Category B conditions, as shown in Table 2-4.

Table 2-4: Voltage Criteria Violations under Category B Conditions for the 2019 SP Pre-Project Scenario Case A

Contingency (System Element Lost)	Substation Name and Number	Bus Number	Nominal kV	Emergency Minimum Voltage (kV)	Emergency Maximum Voltage (kV)	Initial Voltage (kV)	Steady State Voltage (kV)
648ST1 (Metiskow 648S Transformer T1)	Bull Creek 280S	990	144	130	155	138	122

Contingency (System Element Lost)	Substation Name and Number	Bus Number	Nominal kV	Emergency Minimum Voltage (kV)	Emergency Maximum Voltage (kV)	Initial Voltage (kV)	Steady State Voltage (kV)
	Briker 880S	1314	144	130	155	144	125
	Kitscoty 705S	1387	144	130	155	147	129
	Hill 751S	1393	144	130	155	147	128
	Lloydminster 716S	1455	144	130	155	147	127
	Killarney Lake 267S	219	138	124	150	140	122
	Hayter 277S	220	138	124	150	138	122
	Edgerton 899S	362	138	124	150	141	123
	Kitscoty 705S	1388	72	65	79	72	62
	Hill 751S	1394	72	65	79	72	62

POD bus voltage deviations were observed under certain Category B conditions as shown in Table 2-5.

Table 2-5: POD Bus Voltage Deviations under Category B Conditions for the 2019 SP Pre-Project Scenario Case A

Contingency (System Element Lost)	Substation Name and Number	Bus Number	Nominal kV	Initial Voltage (kV)	Voltage Deviations for POD Busses					
					Post Transient (kV)	% Change	Post Auto (kV)	% Change	Post Manual (kV)	% Change
648ST1 (Metiskow 648S Transformer T1)	Killarney Lake 267S	4219	25	26	22	-14	22	-17	22	-17
	Hayter 277S	4220	25	26	23	-12	22	-15	23	-14
	Edgerton 899S	4361	25	26	22	-14	WL*	WL	WL	WL
	Lloydminster 716S	14055	25	26	23	-14	WL	WL	WL	WL

Contingency (System Element Lost)	Substation Name and Number	Bus Number	Nominal kV	Initial Voltage (kV)	Voltage Deviations for POD Busses					
					Post Transient (kV)	% Change	Post Auto (kV)	% Change	Post Manual (kV)	% Change
	Hill 751S	18393	25	26	22	-15	WL	WL	WL	WL
	Briker 880S	19314	25	26	23	-14	23	-13	23	-13
	Kitscoty 705S	19388	25	26	23	-12	WL	WL	WL	WL
	Hill 751S	99393	25	26	23	-14	23	-13	23	-14

*WL (Within Limit) – Voltage deviation was restored within the acceptable limit.

2.1.4. 2019 Summer Peak Pre-Project Case B

Category A condition

No Reliability Criteria violations were observed under the Category A condition.

Category B conditions

A voltage collapse was observed for the contingency of 648ST1 (Metiskow 648S Transformer T1). No other voltage criteria violations or POD bus voltage deviations were observed. Thermal criteria violations, both above the seasonal continuous rating and above the short-term (emergency) rating, were observed under certain Category B conditions, as shown in Table 2-6.

Table 2-6: Thermal Criteria Violations under Category B Conditions for the 2019 SP Pre-Project Scenario Case B

Contingency (System Element Lost)	Details of Violation (Violation Observed On)	Seasonal Continuous Rating (MVA)	Short-term (Emergency) Rating (MVA)	Pre-Project Results	
				Power Flow (MVA)	% Loading
7L42 (Hill 751S - Lloydminster 716S)	7L129 (Buffalo Creek 526S - Bauer 918S Tap)	109.3	123.6	117.8	107.7
	7L129 (Bauer 918S Tap - Vermilion 710S)	109.3	123.6	109.6	100.3
7L749\749L\7LB749 (Edgerton 899S - Briker 880S - Lloydminster 716S)	7L129 (Buffalo Creek 526S - Bauer 918S Tap)	109.3	123.6	128.3	117.4
	7L129 (Bauer 918S Tap - Vermilion 710S)	109.3	123.6	120.3	110.1
	7L130 (Vermilion 710S - Kitscoty 705S)	71.9	71.9	73.1	101.7

Contingency (System Element Lost)	Details of Violation (Violation Observed On)	Seasonal Continuous Rating (MVA)	Short-term (Emergency) Rating (MVA)	Pre-Project Results	
				Power Flow (MVA)	% Loading
51ST3 OR 51ST4 (Wainwright 51S Transformer T3 or T4)	7L129 (Buffalo Creek 526S - Bauer 918S Tap)	109.3	123.6	109.3	100.0
9L20 (Nevis 766S - Cordel 755S)	7L129 (Buffalo Creek 526S - Bauer 918S Tap)	109.3	123.6	122.5	112.1
	7L129 (Bauer 918S Tap - Vermilion 710S)	109.3	123.6	114.1	104.4
7L701\7LA701\701L (Battle River 757S - Heisler 764S - Strome 223S)	7L129 (Buffalo Creek 526S - Bauer 918S Tap)	109.3	123.6	125.0	114.4
	7L129 (Bauer 918S Tap - Vermilion 710S)	109.3	123.6	116.6	106.7
749L\749AL (Metiskow 648S - Edgerton 899S)	7L129 (Buffalo Creek 526S - Bauer 918S Tap)	109.3	123.6	135.8	124.2
	7L129 (Bauer 918S Tap - Vermilion 710S)	109.3	123.6	127.5	116.7
	7L130 (Vermilion 710S - Kitscoty 705S)	71.9	71.9	82.5	114.8
	7L14 (Kitscoty 705S - Hill 751S)	71.9	71.9	77.7	108.1
966L\9L966 (Hansman Lake 650S - Pemukan 932S)	7L224 (Hansman Lake 650S - Monitor 774S)	109.3	123.6	114.8	105.0
	7L127 (Monitor 774S - Pemukan 932S)	126.5	126.5	142.3	112.5
899ST3A (Edgerton 899S Transformer T3A)	7L129 (Buffalo Creek 526S - Bauer 918S Tap)	109.3	123.6	131.1	120.0
	7L129 (Bauer 918S Tap - Vermilion 710S)	109.3	123.6	123.0	112.6
	7L130 (Vermilion 710S - Kitscoty 705S)	71.9	71.9	77.6	107.9
	7L14 (Kitscoty 705S - Hill 751S)	71.9	71.9	72.8	101.2
912L\9L912 (Red Deer 63S - Nevis 766S)	7L129 (Buffalo Creek 526S - Bauer 918S Tap)	109.3	123.6	129.6	118.5
	7L129 (Bauer 918S Tap - Vermilion 710S)	109.3	123.6	121.1	110.8
9L29 (Oakland 946S - Coyote Lake 963S)	7L159 (Ghost Pine 114S Tap - Heatburg 948S)	109.3	123.6	120.3	110.0
	766S901T (Nevis 766S Transformer 901T)	100.0	100.0	101.9	101.9
	7L16 (Nevis 766S - Heatburg 948S)	109.3	123.6	116.1	106.2
	7L85 (Wintering Hills 804S - Bullpound 803S)	109.3	123.6	112.6	103.0

Contingency (System Element Lost)	Details of Violation (Violation Observed On)	Seasonal Continuous Rating (MVA)	Short-term (Emergency) Rating (MVA)	Pre-Project Results	
				Power Flow (MVA)	% Loading
766S901T (Nevis 766S Transformer 901T)	7L129 (Buffalo Creek 526S - Bauer 918S Tap)	109.3	123.6	129.5	118.5
	7L129 (Bauer 918S Tap - Vermilion 710S)	109.3	123.6	121.0	110.7
701L (North Holden 395S - Strome 223S)	7L129 (Buffalo Creek 526S - Bauer 918S Tap)	109.3	123.6	120.8	110.5
	7L129 (Bauer 918S Tap - Vermilion 710S)	109.3	123.6	112.5	102.9
7L77 (North Holden 395S - Vegreville 709S)	7L129 (Buffalo Creek 526S - Bauer 918S Tap)	109.3	123.6	117.0	107.1
395ST1 (North Holden 395S Transformer T1)	7L129 (Buffalo Creek 526S - Bauer 918S Tap)	109.3	123.6	122.9	112.4
	7L129 (Bauer 918S Tap - Vermilion 710S)	109.3	123.6	114.5	104.7
EATL (Newell 2075S – Heathfield 2029S)	7L129 (Buffalo Creek 526S - Bauer 918S Tap)	109.3	123.6	133.8	122.4
	7L129 (Bauer 918S Tap - Vermilion 710S)	109.3	123.6	125.2	114.6

2.1.5. 2019 Winter Peak Pre-Project Case A

Category A condition

No Reliability Criteria violations were observed under the Category A condition.

Category B conditions

A voltage collapse was observed for the contingency of 648ST1. No other voltage criteria violations or POD bus voltage deviations were observed. Thermal criteria violations, both above the seasonal continuous rating and above the short-term (emergency) rating, were observed under certain Category B conditions, as shown in Table 2-7.

Table 2-7: Thermal Criteria Violations under Category B Conditions for the 2019 WP Pre-Project Scenario Case A

Contingency (System Element Lost)	Details of Violation (Violation Observed On)	Seasonal Continuous Rating (MVA)	Short-term (Emergency) Rating (MVA)	Pre-Project Results	
				Power Flow (MVA)	% Loading
7L129\7LA129 (Buffalo Creek 526S - Vermilion 710S - Bauer 918S)	749L (Edgerton 899S - Killarney Lake 267S Tap)	96.0	143.0	98.4	102.5
7L50 (Battle River 757S - Jarrow 252S - Buffalo Creek 526S)	749L (Edgerton 899S - Killarney Lake 267S Tap)	96.0	143.0	105.9	110.3

Contingency (System Element Lost)	Details of Violation (Violation Observed On)	Seasonal Continuous Rating (MVA)	Short-term (Emergency) Rating (MVA)	Pre-Project Results	
				Power Flow (MVA)	% Loading
	7L749 (Edgerton 899S - Briker 880S Tap)	96.0	143.0	97.1	101.2
9L20 (Nevis 766S - Cordel 755S)	766S901T (Nevis 766S Transformer 901T)	100.0	100.0	100.6	100.6
749L\749AL (Metiskow 648S - Edgerton 899S)	7L50 (Buffalo Creek 526S - Jarrow 252S Tap)	139.8	150.5	142.8	102.1
	7L130 (Vermilion 710S - Kitscoty 705S)	86.3	86.3	91.8	106.4
9L29 (Oakland 946S - Coyote Lake 963S)	766S901T (Nevis 766S Transformer 901T)	100.0	100.0	100.7	100.7
526ST1 or 526ST2 (Buffalo Creek 526S Transformer T1 or T2)	749L (Edgerton 899S - Killarney Lake 267S Tap)	96.0	143.0	101.1	105.3

2.1.6. 2019 Winter Peak Pre-Project Case B

Category A condition

No Reliability Criteria violations were observed under the Category A condition.

Category B conditions

A voltage collapse was observed for the contingency of 648ST1. No other voltage criteria violations or POD bus voltage deviations were observed. Thermal criteria violations, both above the seasonal continuous rating and above the short-term (emergency) rating, were observed under certain Category B conditions, as shown in Table 2-8.

Table 2-8: Thermal Criteria Violations under Category B Conditions for the 2019 WP Pre-Project Scenario Case B

Contingency (System Element Lost)	Details of Violation (Violation Observed On)	Seasonal Continuous Rating (MVA)	Short-term (Emergency) Rating (MVA)	Pre-Project Results	
				Power Flow (MVA)	% Loading
7L129\7LA129 (Buffalo Creek 526S - Vermilion 710S - Bauer 918S)	749L (Edgerton 899S - Killarney Lake 267S Tap)	96.0	143.0	100.6	104.8
7L749\749L\7LB749 (Edgerton 899S - Briker 880S - Lloydminster 716S)	7L129 (Buffalo Creek 526S - Bauer 918S Tap)	139.0	142.8	148.1	106.6
	7L129 (Bauer 918S Tap - Vermilion 710S)	139.0	142.8	140.1	100.8
9L20 (Nevis 766S - Cordel 755S)	7L129 (Buffalo Creek 526S - Bauer 918S Tap)	139.0	142.8	147.5	106.1

Contingency (System Element Lost)	Details of Violation (Violation Observed On)	Seasonal Continuous Rating (MVA)	Short-term (Emergency) Rating (MVA)	Pre-Project Results	
				Power Flow (MVA)	% Loading
	7L129 (Bauer 918S Tap - Vermilion 710S)	139.0	142.8	139.2	100.1
	766S901T (Nevis 766S Transformer 901T)	100.0	100.0	104.7	104.7
7L701\7LA701\701L (Battle River 757S - Heisler 764S - Strome 223S)	7L129 (Buffalo Creek 526S - Bauer 918S Tap)	139.0	142.8	146.8	105.6
749L\749AL (Metiskow 648S - Edgerton 899S)	7L129 (Buffalo Creek 526S - Bauer 918S Tap)	139.0	142.8	156.2	112.4
	7L129 (Bauer 918S Tap - Vermilion 710S)	139.0	142.8	147.8	106.3
	7L130 (Vermilion 710S - Kitscoty 705S)	86.3	86.3	91.2	105.6
899ST3A (Edgerton 899S Transformer T3A)	7L129 (Buffalo Creek 526S - Bauer 918S Tap)	139.0	142.8	151.2	108.7
	7L129 (Bauer 918S Tap - Vermilion 710S)	139.0	142.8	143.0	102.9
912L\9L912 (Red Deer 63S - Nevis 766S)	7L129 (Buffalo Creek 526S - Bauer 918S Tap)	139.0	142.8	154.9	111.4
	7L129 (Bauer 918S Tap - Vermilion 710S)	139.0	142.8	146.4	105.3
9L29 (Oakland 946S - Coyote Lake 963S)	766S901T (Nevis 766S Transformer 901T)	100.0	100.0	100.5	100.5
766S901T (Nevis 766S Transformer 901T)	7L129 (Buffalo Creek 526S - Bauer 918S Tap)	139.0	142.8	155.2	111.6
	7L129 (Bauer 918S Tap - Vermilion 710S)	139.0	142.8	146.7	105.6
701L (North Holden 395S - Strome 223S)	7L129 (Buffalo Creek 526S - Bauer 918S Tap)	139.0	142.8	142.8	102.8
395ST1 (North Holden 395S Transformer T1)	7L129 (Buffalo Creek 526S - Bauer 918S Tap)	139.0	142.8	144.7	104.1
EATL (Newell 2075S – Heathfield 2029S)	7L129 (Buffalo Creek 526S - Bauer 918S Tap)	139.0	142.8	147.6	106.2
	7L129 (Bauer 918S Tap - Vermilion 710S)	139.0	142.8	139.2	100.1
526ST1 or 526ST2 (Buffalo Creek 526S Transformer T1 or T2)	749L (Edgerton 899S - Killarney Lake 267S Tap)	96.0	143.0	100.8	105.0

3. Post-Project Study Results

This section describes the results of the post-Project power flow studies, and transient stability studies.

As described in Section 2 of Attachment A1, the post-Project studies were performed using Alternative 2.

3.1. Power Flow Studies

Power flow diagrams illustrating the post-Project power flow studies results for Category A conditions and the Category B conditions that resulted in Reliability Criteria violations are provided in Attachment A3.

3.1.1. 2019 Summer Light Post-Project Case A

Category A condition

No Reliability Criteria violations were observed under the Category A condition.

Category B conditions

No voltage criteria violations or POD bus voltage deviations were observed. Thermal criteria violations, both above the seasonal continuous rating and above the short-term (emergency) rating, were observed under certain Category B conditions, as shown in Table 3-1.

Table 3-1: Thermal Criteria Violations under Category B Conditions for the 2019 SL Post-Project Scenario Case A

Contingency (System Element Lost)	Details of Violation (Violation Observed On)	Seasonal Continuous Rating (MVA)	Short-term (Emergency) Rating (MVA)	Pre-Project Results		Post-Project Results		% Loading Difference (Post-Pre)
				Power Flow (MVA)	% Loading	Power Flow (MVA)	% Loading	
9L20 (Nevis 766S - Cordel 755S)	174L (Bardo 197S - North Holden 395S)	85.0	94.0	78.7	92.6	93.1	109.5	16.9
	766S901T (Nevis 766S Transformer 901T)	100.0	100.0	103.9	103.9	110.0	110.0	6.1
648ST1 (Metiskow 648S Transformer T1)	7L130 (Vermilion 710S - Kitscoty 705S)	71.9	71.9	72.5	100.8	72.5	100.8	0.1
912L\9L912 (Red Deer 63S - Nevis 766S)	174L (Bardo 197S - North Holden 395S)	85.0	94.0	90.7	106.8	106.9	125.8	19.0

Contingency (System Element Lost)	Details of Violation (Violation Observed On)	Seasonal Continuous Rating (MVA)	Short-term (Emergency) Rating (MVA)	Pre-Project Results		Post-Project Results		% Loading Difference (Post-Pre)
				Power Flow (MVA)	% Loading	Power Flow (MVA)	% Loading	
9L29 (Oakland 946S - Coyote Lake 963S)	7L159 (Ghost Pine 114S Tap - Heatburg 948S)	109.3	123.6	125.7	115.0	119.3	109.2	-5.8
	766S901T (Nevis 766S Transformer 901T)	100.0	100.0	123.1	123.1	115.5	115.5	-7.6
	7L16 (Nevis 766S - Heatburg 948S)	109.3	123.6	122.3	111.9	115.9	106.0	-5.8
	7L85 (Wintering Hills 804S - Bullpound 803S)	109.3	123.6	134.7	123.2	134.3	122.9	-0.3
	7L85 (Bullpound 803S - Anderson 801S)	109.3	123.6	128.6	117.7	128.3	117.4	-0.3
	801S901T (Anderson 801S Transformer 901T)	125.0	125.0	126.0	100.8	125.7	100.6	-0.3
766S901T (Nevis 766S Transformer 901T)	174L (Bardo 197S - North Holden 395S)	85.0	94.0	90.7	106.7	107.0	125.9	19.2

3.1.2. 2019 Summer Light Post-Project Case B

Category A condition

No Reliability Criteria violations were observed under the Category A condition.

Category B conditions

No voltage criteria violations or POD bus voltage deviations were observed. Thermal criteria violations, both above the seasonal continuous rating and above the short-term (emergency) rating, were observed under certain Category B conditions, as shown in Table 3-2.

Table 3-2: Thermal Criteria Violations under Category B Conditions for the 2019 SL Post-Project Scenario Case B

Contingency (System Element Lost)	Details of Violation (Violation Observed On)	Seasonal Continuous Rating (MVA)	Short-term (Emergency) Rating (MVA)	Pre-Project Results		Post-Project Results		% Loading Difference (Post-Pre)
				Power Flow (MVA)	% Loading	Power Flow (MVA)	% Loading	
9L80 (Battle River 757S - Cordel 755S)	174L (Bardo 197S - North Holden 395S)	85.0	94.0	83.8	98.6	88.6	104.2	5.6
9L20 (Nevis 766S - Cordel 755S)	174L (Bardo 197S - North Holden 395S)	85.0	94.0	106.2	124.9	120.0	141.2	16.3
	766S901T (Nevis 766S Transformer 901T)	100.0	100.0	117.1	117.1	127.7	127.7	10.7

Contingency (System Element Lost)	Details of Violation (Violation Observed On)	Seasonal Continuous Rating (MVA)	Short-term (Emergency) Rating (MVA)	Pre-Project Results		Post-Project Results		% Loading Difference (Post-Pre)
				Power Flow (MVA)	% Loading	Power Flow (MVA)	% Loading	
757S912T (Battle River 757S Transformer 912T)	174L (Bardo 197S - North Holden 395S)	85.0	94.0	83.8	98.6	88.5	104.2	5.6
648ST1 (Metiskow 648S Transformer T1)	7L130 (Vermilion 710S - Kitscoty 705S)	71.9	71.9	77.6	107.9	76.9	106.9	-1.0
	7L14 (Kitscoty 705S - Hill 751S)	71.9	71.9	73.9	102.7	73.1	101.7	-1.0
912L\9L912 (Red Deer 63S - Nevis 766S)	174L (Bardo 197S - North Holden 395S)	85.0	94.0	121.1	142.4	136.2	160.3	17.9
	701L (North Holden 395S - Strome 223S)	119.0	131.0	107.6	90.4	123.1	103.4	13.0
9L46 (Lanfine 959S - Sedalia 363S)	174L (Bardo 197S - North Holden 395S)	85.0	94.0	78.4	92.3	86.9	102.2	9.9
9L29 (Oakland 946S - Coyote Lake 963S)	7L159 (Ghost Pine 114S Tap - Heatburg 948S)	109.3	123.6	123.2	112.7	122.0	111.7	-1.1
	766S901T (Nevis 766S Transformer 901T)	100.0	100.0	120.9	120.9	120.8	120.8	-0.1
	7L16 (Nevis 766S - Heatburg 948S)	109.3	123.6	119.7	109.5	118.6	108.5	-1.1
	7L85 (Wintering Hills 804S - Bullpound 803S)	109.3	123.6	129.8	118.8	131.5	120.3	1.5
	7L85 (Bullpound 803S - Anderson 801S)	109.3	123.6	123.8	113.3	125.5	114.8	1.5
766S901T (Nevis 766S Transformer 901T)	174L (Bardo 197S - North Holden 395S)	85.0	94.0	121.1	142.4	136.4	160.4	18.0
	701L (North Holden 395S - Strome 223S)	119.0	131.0	107.6	90.4	123.2	103.5	13.1

3.1.3. 2019 Summer Peak Post-Project Case A

Category A condition

No Reliability Criteria violations were observed under the Category A condition.

Category B conditions

A voltage collapse was observed for the contingency of 648ST1. No other voltage criteria violations or POD bus voltage deviations were observed. Thermal criteria violations, both above the seasonal continuous rating and above the short-term (emergency) rating, were observed under certain Category B conditions, as shown in Table 3-3.

Table 3-3: Thermal Criteria Violations under Category B Conditions for the 2019 SP Post-Project Scenario Case A

Contingency (System Element Lost)	Details of Violation (Violation Observed On)	Seasonal Continuous Rating (MVA)	Short-term (Emergency) Rating (MVA)	Pre-Project Results		Post-Project Results		% Loading Difference (Post-Pre)
				Power Flow (MVA)	% Loading	Power Flow (MVA)	% Loading	
7L42 (Hill 751S - Lloydminster 716S)	7L50 (Buffalo Creek 526S - Jarrow 252S Tap)	109.2	123.6	113.0	103.5	115.0	105.3	1.8
7L749\749L\7LB749 (Edgerton 899S - Briker 880S - Lloydminster 716S)	7L50 (Buffalo Creek 526S - Jarrow 252S Tap)	109.2	123.6	124.1	113.6	125.7	115.1	1.5
	7L130 (Vermilion 710S - Kitscoty 705S)	71.9	71.9	74.1	103.0	72.3	100.6	-2.5
7L50 (Battle River 757S - Jarrow 252S - Buffalo Creek 526S)	749L (Metiskow 648S - Killarney Lake 267S Tap)	122.0	134.0	125.1	102.5	126.8	103.9	1.4
	749L (Edgerton 899S - Killarney Lake 267S Tap)	96.0	134.0	100.7	104.9	101.0	105.3	0.4
9L16 (Tinchebray 972S - Cordel 755S)	9L51 (Sedalia 363S - Pemukan 932S)	332.0	432.0	349.4	105.2	368.7	111.1	5.8
9L20 (Nevis 766S - Cordel 755S)	7L50 (Buffalo Creek 526S - Jarrow 252S Tap)	109.2	123.6	109.1	99.9	116.2	106.4	6.5
7L701\7LA701\701L (Battle River 757S - Heisler 764S - Strome 223S)	7L50 (Buffalo Creek 526S - Jarrow 252S Tap)	109.2	123.6	113.9	104.3	118.2	108.2	3.9
749L\749AL (Metiskow 648S - Edgerton 899S)	7L129 (Buffalo Creek 526S - Bauer 918S Tap)	109.3	123.6	110.7	101.3	113.1	103.5	2.2
	7L50 (Buffalo Creek 526S - Jarrow 252S Tap)	109.2	123.6	130.7	119.7	133.1	121.9	2.2
	7L130 (Vermilion 710S - Kitscoty 705S)	71.9	71.9	82.9	115.3	82.0	114.0	-1.3
	7L14 (Kitscoty 705S - Hill 751S)	71.9	71.9	78.1	108.6	77.1	107.3	-1.3
966L\9L966 (Hansman Lake 650S - Pemukan 932S)	7L224 (Hansman Lake 650S - Monitor 774S)	109.3	123.6	126.4	115.7	116.1	106.2	-9.5
	7L127 (Monitor 774S - Pemukan 932S)	126.5	126.5	153.8	121.5	143.0	113.1	-8.5
899ST3A (Edgerton 899S Transformer T3A)	7L50 (Buffalo Creek 526S - Jarrow 252S Tap)	109.2	123.6	126.7	116.0	128.5	117.7	1.7
	7L130 (Vermilion 710S - Kitscoty 705S)	71.9	71.9	78.3	108.9	76.7	106.7	-2.2
	7L14 (Kitscoty 705S - Hill 751S)	71.9	71.9	73.5	102.3	71.9	100.0	-2.3

Contingency (System Element Lost)	Details of Violation (Violation Observed On)	Seasonal Continuous Rating (MVA)	Short-term (Emergency) Rating (MVA)	Pre-Project Results		Post-Project Results		% Loading Difference (Post-Pre)
				Power Flow (MVA)	% Loading	Power Flow (MVA)	% Loading	
912L\9L912 (Red Deer 63S - Nevis 766S)	701L (North Holden 395S - Strome 223S)	119.0	131.0	105.7	88.8	121.6	102.2	13.4
	7L50 (Buffalo Creek 526S - Jarrow 252S Tap)	109.2	123.6	115.6	105.8	123.6	113.2	7.4
9L29 (Oakland 946S - Coyote Lake 963S)	7L159 (Ghost Pine 114S Tap - Heatburg 948S)	109.3	123.6	121.1	110.8	122.1	111.7	0.9
	766S901T (Nevis 766S Transformer 901T)	100.0	100.0	100.6	100.6	103.0	103.0	2.4
	7L16 (Nevis 766S - Heatburg 948S)	109.3	123.6	117.0	107.0	118.0	107.9	0.9
	7L85 (Wintering Hills 804S - Bullpound 803S)	109.3	123.6	111.0	101.6	114.2	104.5	2.9
766S901T (Nevis 766S Transformer 901T)	701L (North Holden 395S - Strome 223S)	119.0	131.0	105.6	88.7	121.6	102.1	13.5
	7L50 (Buffalo Creek 526S - Jarrow 252S Tap)	109.2	123.6	115.4	105.7	123.6	113.2	7.5
701L (North Holden 395S - Strome 223S)	7L50 (Buffalo Creek 526S - Jarrow 252S Tap)	109.2	123.6	110.0	100.7	114.0	104.4	3.7
7L77 (North Holden 395S - Vegreville 709S)	7L50 (Buffalo Creek 526S - Jarrow 252S Tap)	109.2	123.6	110.9	101.5	112.7	103.2	1.7
395ST1 (North Holden 395S Transformer T1)	7L50 (Buffalo Creek 526S - Jarrow 252S Tap)	109.2	123.6	116.1	106.3	119.0	108.9	2.6
EATL (Newell 2075S – Heathfield 2029S)	701L (North Holden 395S - Strome 223S)	119.0	131.0	112.3	94.3	119.9	100.8	6.4
	7L50 (Buffalo Creek 526S - Jarrow 252S Tap)	109.2	123.6	122.4	112.1	125.4	114.8	2.7
526ST1 or 526ST2 (Buffalo Creek 526S Transformer T1 or T2)	749L (Edgerton 899S - Killarney Lake 267S Tap)	96.0	134.0	96.0	100.0	96.3	100.3	0.4

3.1.4. 2019 Summer Peak Post-Project Case B

Category A condition

No Reliability Criteria violations were observed under the Category A condition.

Category B conditions

A voltage collapse was observed for the contingency of 648ST1. No other voltage criteria violations or POD bus voltage deviations were observed. Thermal criteria violations, both above the seasonal continuous rating and above the short-term (emergency) rating, were observed under certain Category B conditions, as shown in Table 3-4.

Table 3-4: Thermal Criteria Violations under Category B Conditions for the 2019 SP Post-Project Scenario Case B

Contingency (System Element Lost)	Details of Violation (Violation Observed On)	Seasonal Continuous Rating (MVA)	Short-term (Emergency) Rating (MVA)	Pre-Project Results		Post-Project Results		% Loading Difference (Post-Pre)
				Power Flow (MVA)	% Loading	Power Flow (MVA)	% Loading	
7L42 (Hill 751S - Lloydminster 716S)	7L129 (Buffalo Creek 526S - Bauer 918S Tap)	109.3	123.6	117.8	107.7	122.0	111.6	3.8
	7L129 (Bauer 918S Tap - Vermilion 710S)	109.3	123.6	109.6	100.3	113.8	104.1	3.8
7L749\749L\7LB749 (Edgerton 899S - Briker 880S - Lloydminster 716S)	7L129 (Buffalo Creek 526S - Bauer 918S Tap)	109.3	123.6	128.3	117.4	132.4	121.1	3.7
	7L129 (Bauer 918S Tap - Vermilion 710S)	109.3	123.6	120.3	110.1	124.3	113.7	3.7
	7L130 (Vermilion 710S - Kitscoty 705S)	71.9	71.9	73.1	101.7	73.5	102.2	0.4
681L (Tucuman 478S - Hardisty 377S)	7L129 (Buffalo Creek 526S - Bauer 918S Tap)	109.3	123.6	107.0	97.9	110.4	101.0	3.2
769L\769AL (Hardisty 377S - Clipper 656S - Rosyth 286S)	7L129 (Buffalo Creek 526S - Bauer 918S Tap)	109.3	123.6	106.5	97.4	109.9	100.5	3.1
51ST3 OR 51ST4 (Wainwright 51S Transformer T3 or T4)	7L129 (Buffalo Creek 526S - Bauer 918S Tap)	109.3	123.6	109.3	100.0	112.8	103.2	3.1
377ST1 (Hardisty 377S Transformer T1)	7L129 (Buffalo Creek 526S - Bauer 918S Tap)	109.3	123.6	108.5	99.2	111.9	102.4	3.2
296ST1 OR 296ST2 (Rosyth 286S Transformer T1 or T2)	7L129 (Buffalo Creek 526S - Bauer 918S Tap)	109.3	123.6	106.5	97.4	109.9	100.5	3.1
9L16 (Tinchebray 972S - Cordel 755S)	9L51 (Sedalia 363S - Pemukan 932S)	332.0	432.0	322.5	97.1	341.8	103.0	5.8
9L20 (Nevis 766S - Cordel 755S)	7L129 (Buffalo Creek 526S - Bauer 918S Tap)	109.3	123.6	122.5	112.1	130.3	119.2	7.1
	7L129 (Bauer 918S Tap - Vermilion 710S)	109.3	123.6	114.1	104.4	121.8	111.4	7.1

Contingency (System Element Lost)	Details of Violation (Violation Observed On)	Seasonal Continuous Rating (MVA)	Short-term (Emergency) Rating (MVA)	Pre-Project Results		Post-Project Results		% Loading Difference (Post-Pre)
				Power Flow (MVA)	% Loading	Power Flow (MVA)	% Loading	
	766S901T (Nevis 766S Transformer 901T)	100.0	100.0	90.7	90.7	100.4	100.4	9.8
7L701\7LA701\ 701L (Battle River 757S - Heisler 764S - Strome 223S)	7L129 (Buffalo Creek 526S - Bauer 918S Tap)	109.3	123.6	125.0	114.4	130.0	119.0	4.6
	7L129 (Bauer 918S Tap - Vermilion 710S)	109.3	123.6	116.6	106.7	121.5	111.2	4.5
749L\749AL (Metiskow 648S - Edgerton 899S)	7L129 (Buffalo Creek 526S - Bauer 918S Tap)	109.3	123.6	135.8	124.2	139.9	128.0	3.8
	7L129 (Bauer 918S Tap - Vermilion 710S)	109.3	123.6	127.5	116.7	131.7	120.5	3.8
	7L130 (Vermilion 710S - Kitscoty 705S)	71.9	71.9	82.5	114.8	82.7	115.0	0.3
	7L14 (Kitscoty 705S - Hill 751S)	71.9	71.9	77.7	108.1	77.9	108.3	0.3
954L (Hansman Lake 650S - Metiskow 648S)	7L129 (Buffalo Creek 526S - Bauer 918S Tap)	109.3	123.6	106.0	97.0	109.4	100.1	3.1
885L (Hansman Lake 650S - Metiskow 648S)	7L129 (Buffalo Creek 526S - Bauer 918S Tap)	109.3	123.6	106.2	97.2	109.5	100.2	3.0
966L\9L966 (Hansman Lake 650S - Pemukan 932S)	7L127 (Monitor 774S - Pemukan 932S)	126.5	126.5	142.3	112.5	131.6	104.0	-8.5
899ST3A (Edgerton 899S Transformer T3A)	7L129 (Buffalo Creek 526S - Bauer 918S Tap)	109.3	123.6	131.1	120.0	135.2	123.7	3.7
	7L129 (Bauer 918S Tap - Vermilion 710S)	109.3	123.6	123.0	112.6	127.1	116.3	3.7
	7L130 (Vermilion 710S - Kitscoty 705S)	71.9	71.9	77.6	107.9	77.8	108.3	0.4
	7L14 (Kitscoty 705S - Hill 751S)	71.9	71.9	72.8	101.2	73.0	101.6	0.4
650ST1 (Hansman Lake 650S Transformer T1)	7L129 (Buffalo Creek 526S - Bauer 918S Tap)	109.3	123.6	105.9	96.9	109.3	100.0	3.1
912L\9L912 (Red Deer 63S - Nevis 766S)	701L (North Holden 395S - Strome 223S)	119.0	131.0	109.5	92.0	125.3	105.3	13.3
	7L701 (Strome 223S - Heisler 764S Tap)	139.9	158.0	126.5	90.4	142.4	101.8	11.4

Contingency (System Element Lost)	Details of Violation (Violation Observed On)	Seasonal Continuous Rating (MVA)	Short-term (Emergency) Rating (MVA)	Pre-Project Results		Post-Project Results		% Loading Difference (Post-Pre)
				Power Flow (MVA)	% Loading	Power Flow (MVA)	% Loading	
	7L129 (Buffalo Creek 526S - Bauer 918S Tap)	109.3	123.6	129.6	118.5	138.2	126.4	7.8
	7L129 (Bauer 918S Tap - Vermilion 710S)	109.3	123.6	121.1	110.8	129.6	118.5	7.8
9L46 (Lanfine 959S - Sedalia 363S)	7L129 (Buffalo Creek 526S - Bauer 918S Tap)	109.3	123.6	106.1	97.1	110.0	100.6	3.5
9L29 (Oakland 946S - Coyote Lake 963S)	7L159 (Ghost Pine 114S Tap - Heatburg 948S)	109.3	123.6	120.3	110.0	118.3	108.2	-1.8
	766S901T (Nevis 766S Transformer 901T)	100.0	100.0	101.9	101.9	100.4	100.4	-1.5
	7L16 (Nevis 766S - Heatburg 948S)	109.3	123.6	116.1	106.2	114.2	104.5	-1.8
	7L85 (Wintering Hills 804S - Bullpound 803S)	109.3	123.6	112.6	103.0	114.2	104.4	1.4
766S901T (Nevis 766S Transformer 901T)	701L (North Holden 395S - Strome 223S)	119.0	131.0	109.4	91.9	125.3	105.3	13.4
	7L701 (Strome 223S - Heisler 764S Tap)	139.9	158.0	126.4	90.4	142.4	101.8	11.4
	7L129 (Buffalo Creek 526S - Bauer 918S Tap)	109.3	123.6	129.5	118.5	138.2	126.4	8.0
	7L129 (Bauer 918S Tap - Vermilion 710S)	109.3	123.6	121.0	110.7	129.6	118.6	7.9
9L933\933L (Ware Junction 132S - Anderson 801S)	7L129 (Buffalo Creek 526S - Bauer 918S Tap)	109.3	123.6	106.4	97.4	109.9	100.6	3.2
9L934\934L (Ware Junction 132S - Anderson 801S)	7L129 (Buffalo Creek 526S - Bauer 918S Tap)	109.3	123.6	106.6	97.6	110.1	100.8	3.2
9L950\950L (Ware Junction 132S - Anderson 801S)	7L129 (Buffalo Creek 526S - Bauer 918S Tap)	109.3	123.6	106.4	97.3	109.9	100.5	3.2
701L (North Holden 395S - Strome 223S)	7L129 (Buffalo Creek 526S - Bauer 918S Tap)	109.3	123.6	120.8	110.5	125.8	115.1	4.5
	7L129 (Bauer 918S Tap - Vermilion 710S)	109.3	123.6	112.5	102.9	117.4	107.4	4.5
7L77 (North Holden 395S - Vegreville	7L129 (Buffalo Creek 526S - Bauer 918S Tap)	109.3	123.6	117.0	107.1	120.4	110.1	3.1

Contingency (System Element Lost)	Details of Violation (Violation Observed On)	Seasonal Continuous Rating (MVA)	Short-term (Emergency) Rating (MVA)	Pre-Project Results		Post-Project Results		% Loading Difference (Post-Pre)
				Power Flow (MVA)	% Loading	Power Flow (MVA)	% Loading	
709S)	7L129 (Bauer 918S Tap - Vermilion 710S)	109.3	123.6	108.6	99.4	112.0	102.4	3.1
395ST1 (North Holden 395S Transformer T1)	7L129 (Buffalo Creek 526S - Bauer 918S Tap)	109.3	123.6	122.9	112.4	127.1	116.3	3.8
	7L129 (Bauer 918S Tap - Vermilion 710S)	109.3	123.6	114.5	104.7	118.6	108.6	3.8
EATL (Newell 2075S – Heathfield 2029S)	701L (North Holden 395S - Strome 223S)	119.0	131.0	111.9	94.0	119.7	100.6	6.6
	7L129 (Buffalo Creek 526S - Bauer 918S Tap)	109.3	123.6	133.8	122.4	137.2	125.6	3.2
	7L129 (Bauer 918S Tap - Vermilion 710S)	109.3	123.6	125.2	114.6	128.6	117.7	3.1

3.1.5. 2019 Winter Peak Post-Project Case A

Category A condition

No Reliability Criteria violations were observed under the Category A condition.

Category B conditions

A voltage collapse was observed for the contingency of 648ST1. No other voltage criteria violations or POD bus voltage deviations were observed. Thermal criteria violations, both above the seasonal continuous rating and above the short-term (emergency) rating, were observed under certain Category B conditions, as shown in Table 3-5.

Table 3-5: Thermal Criteria Violations under Category B Conditions for the 2019 WP Post-Project Scenario Case A

Contingency (System Element Lost)	Details of Violation (Violation Observed On)	Seasonal Continuous Rating (MVA)	Short-term (Emergency) Rating (MVA)	Pre-Project Results		Post-Project Results		% Loading Difference (Post-Pre)
				Power Flow (MVA)	% Loading	Power Flow (MVA)	% Loading	
7L129\7LA129 (Buffalo Creek 526S - Vermilion 710S - Bauer 918S)	749L (Edgerton 899S - Killarney Lake 267S Tap)	96.0	143.0	98.4	102.5	101.9	106.2	3.7
7L749\749L\7LB749 (Edgerton 899S - Briker 880S - Lloydminster 716S)	7L50 (Buffalo Creek 526S - Jarrow 252S Tap)	139.8	150.5	134.3	96.1	140.5	100.5	4.5

Contingency (System Element Lost)	Details of Violation (Violation Observed On)	Seasonal Continuous Rating (MVA)	Short-term (Emergency) Rating (MVA)	Pre-Project Results		Post-Project Results		% Loading Difference (Post-Pre)
				Power Flow (MVA)	% Loading	Power Flow (MVA)	% Loading	
7L50 (Battle River 757S - Jarrow 252S - Buffalo Creek 526S)	749L (Edgerton 899S - Killarney Lake 267S Tap)	96.0	143.0	105.9	110.3	109.4	114.0	3.7
	7L749 (Edgerton 899S - Briker 880S Tap)	96.0	143.0	97.1	101.2	100.6	104.8	3.6
9L20 (Nevis 766S - Cordel 755S)	766S901T (Nevis 766S Transformer 901T)	100.0	100.0	100.6	100.6	110.8	110.8	10.2
749L\749AL (Metiskow 648S - Edgerton 899S)	7L50 (Buffalo Creek 526S - Jarrow 252S Tap)	139.8	150.5	142.8	102.1	149.1	106.7	4.6
	7L130 (Vermilion 710S - Kitscoty 705S)	86.3	86.3	91.8	106.4	92.1	106.8	0.4
899ST3A (Edgerton 899S Transformer T3A)	7L50 (Buffalo Creek 526S - Jarrow 252S Tap)	139.8	150.5	137.4	98.3	143.7	102.8	4.5
912L\9L912 (Red Deer 63S - Nevis 766S)	701L (North Holden 395S - Strome 223S)	146.0	161.0	135.7	92.9	152.1	104.2	11.3
	7L701 (Strome 223S - Heisler 764S Tap)	169.0	169.0	153.2	90.7	169.8	100.5	9.8
	7L50 (Buffalo Creek 526S - Jarrow 252S Tap)	139.8	150.5	134.6	96.3	145.6	104.1	7.8
766S901T (Nevis 766S Transformer 901T)	701L (North Holden 395S - Strome 223S)	146.0	161.0	135.7	93.0	152.3	104.3	11.4
	7L701 (Strome 223S - Heisler 764S Tap)	169.0	169.0	153.3	90.7	170.0	100.6	9.9
	7L50 (Buffalo Creek 526S - Jarrow 252S Tap)	139.8	150.5	134.9	96.5	146.0	104.4	8.0
526ST1 or 526ST2 (Buffalo Creek 526S Transformer T1 or T2)	749L (Edgerton 899S - Killarney Lake 267S Tap)	96.0	143.0	101.1	105.3	104.6	109.0	3.7

3.1.6. 2019 Winter Peak Post-Project Case B

Category A condition

No Reliability Criteria violations were observed under the Category A condition.

Category B conditions

A voltage collapse was observed for the contingency of 648ST1. No other voltage criteria violations or POD bus voltage deviations were observed. Thermal criteria violations, both above

the seasonal continuous rating and above the short-term (emergency) rating, were observed under certain Category B conditions, as shown in Table 3-6.

Table 3-6: Thermal Criteria Violations under Category B Conditions for the 2019 WP Post-Project Scenario Case B

Contingency (System Element Lost)	Details of Violation (Violation Observed On)	Seasonal Continuous Rating (MVA)	Short-term (Emergency) Rating (MVA)	Pre-Project Results		Post-Project Results		% Loading Difference (Post-Pre)
				Power Flow (MVA)	% Loading	Power Flow (MVA)	% Loading	
7L42 (Hill 751S - Lloydminster 716S)	7L129 (Buffalo Creek 526S - Bauer 918S Tap)	139.0	142.8	136.6	98.3	142.8	102.7	4.4
7L129\7LA129 (Buffalo Creek 526S - Vermilion 710S - Bauer 918S)	749L (Edgerton 899S - Killarney Lake 267S Tap)	96.0	143.0	100.6	104.8	104.1	108.5	3.7
7L749\749L\7LB749 (Edgerton 899S - Briker 880S - Lloydminster 716S)	7L129 (Buffalo Creek 526S - Bauer 918S Tap)	139.0	142.8	148.1	106.6	154.3	111.0	4.4
	7L129 (Bauer 918S Tap - Vermilion 710S)	139.0	142.8	140.1	100.8	146.2	105.2	4.4
9L20 (Nevis 766S - Cordel 755S)	7L129 (Buffalo Creek 526S - Bauer 918S Tap)	139.0	142.8	147.5	106.1	157.3	113.2	7.1
	7L129 (Bauer 918S Tap - Vermilion 710S)	139.0	142.8	139.2	100.1	148.9	107.1	7.0
	766S901T (Nevis 766S Transformer 901T)	100.0	100.0	104.7	104.7	115.6	115.6	10.8
7L701\7LA701\701L (Battle River 757S - Heisler 764S - Strome 223S)	7L129 (Buffalo Creek 526S - Bauer 918S Tap)	139.0	142.8	146.8	105.6	153.9	110.7	5.1
	7L129 (Bauer 918S Tap - Vermilion 710S)	139.0	142.8	138.5	99.6	145.6	104.7	5.1
749L\749AL (Metiskow 648S - Edgerton 899S)	7L129 (Buffalo Creek 526S - Bauer 918S Tap)	139.0	142.8	156.2	112.4	162.5	116.9	4.5
	7L129 (Bauer 918S Tap - Vermilion 710S)	139.0	142.8	147.8	106.3	154.0	110.8	4.5
	7L130 (Vermilion 710S - Kitscoty 705S)	86.3	86.3	91.2	105.6	91.3	105.7	0.1
899ST3A (Edgerton 899S Transformer T3A)	7L129 (Buffalo Creek 526S - Bauer 918S Tap)	139.0	142.8	151.2	108.7	157.3	113.2	4.4
	7L129 (Bauer 918S Tap - Vermilion 710S)	139.0	142.8	143.0	102.9	149.1	107.3	4.4
912L\9L912 (Red Deer 63S	174L (Bardo 197S - North Holden 395S)	90.0	99.0	84.3	93.7	100.2	111.4	17.7

Contingency (System Element Lost)	Details of Violation (Violation Observed On)	Seasonal Continuous Rating (MVA)	Short-term (Emergency) Rating (MVA)	Pre-Project Results		Post-Project Results		% Loading Difference (Post-Pre)
				Power Flow (MVA)	% Loading	Power Flow (MVA)	% Loading	
- Nevis 766S)	701L (North Holden 395S - Strome 223S)	146.0	161.0	139.6	95.6	155.9	106.8	11.2
	7L701 (Strome 223S - Heisler 764S Tap)	169.0	169.0	157.2	93.0	173.8	102.8	9.8
	7L129 (Buffalo Creek 526S - Bauer 918S Tap)	139.0	142.8	154.9	111.4	165.5	119.1	7.7
	7L129 (Bauer 918S Tap - Vermilion 710S)	139.0	142.8	146.4	105.3	156.9	112.9	7.6
9L29 (Oakland 946S - Coyote Lake 963S)	766S901T (Nevis 766S Transformer 901T)	100.0	100.0	100.5	100.5	100.2	100.2	-0.3
766S901T (Nevis 766S Transformer 901T)	174L (Bardo 197S - North Holden 395S)	90.0	99.0	84.6	94.0	100.7	111.8	17.9
	701L (North Holden 395S - Strome 223S)	146.0	161.0	139.7	95.7	156.2	106.9	11.3
	7L701 (Strome 223S - Heisler 764S Tap)	169.0	169.0	157.3	93.1	174.0	102.9	9.9
	7L129 (Buffalo Creek 526S - Bauer 918S Tap)	139.0	142.8	155.2	111.6	166.0	119.4	7.8
	7L129 (Bauer 918S Tap - Vermilion 710S)	139.0	142.8	146.7	105.6	157.4	113.2	7.7
701L (North Holden 395S - Strome 223S)	7L129 (Buffalo Creek 526S - Bauer 918S Tap)	139.0	142.8	142.8	102.8	149.9	107.8	5.1
	7L129 (Bauer 918S Tap - Vermilion 710S)	139.0	142.8	134.7	96.9	141.7	101.9	5.0
7L77 (North Holden 395S - Vegreville 709S)	7L129 (Buffalo Creek 526S - Bauer 918S Tap)	139.0	142.8	137.4	98.8	142.7	102.6	3.8
395ST1 (North Holden 395S Transformer T1)	7L129 (Buffalo Creek 526S - Bauer 918S Tap)	139.0	142.8	144.7	104.1	151.0	108.6	4.5
	7L129 (Bauer 918S Tap - Vermilion 710S)	139.0	142.8	136.4	98.1	142.6	102.6	4.5
EATL (Newell 2075S – Heathfield 2029S)	7L129 (Buffalo Creek 526S - Bauer 918S Tap)	139.0	142.8	147.6	106.2	153.0	110.1	3.9
	7L129 (Bauer 918S Tap - Vermilion 710S)	139.0	142.8	139.2	100.1	144.6	104.0	3.9
	912L\9L912 (Red Deer 63S - Nevis 766S)	498.0	498.0	449.3	90.2	504.5	101.3	11.1

Contingency (System Element Lost)	Details of Violation (Violation Observed On)	Seasonal Continuous Rating (MVA)	Short-term (Emergency) Rating (MVA)	Pre-Project Results		Post-Project Results		% Loading Difference (Post-Pre)
				Power Flow (MVA)	% Loading	Power Flow (MVA)	% Loading	
526ST1 or 526ST2 (Buffalo Creek 526S Transformer T1 or T2)	749L (Edgerton 899S - Killarney Lake 267S Tap)	96.0	143.0	100.8	105.0	104.3	108.6	3.7

3.2. Transient Stability Studies

Transient stability studies were performed for the 2019 SL, 2019 SP and 2019 WP post-Project scenarios using Case A and B for selected Category B contingencies shown in Table 2-13 of Attachment A1.

The results did not indicate any transient stability concerns, and the system showed acceptable dynamic response to all studied Category B conditions, as shown in Table 3-7.

The post-Project transient stability plots are provided in Attachment A4. Dynamic data and assumptions of all equipment proposed for the Project connection are provided in Attachment A5.

Table 3-7: Transient Stability Study Results

Studied Contingency (System Element Lost)	Fault Description and Location	Results
9L24 (Oakland 946S - Lanfine 959S)	3-phase fault at Oakland 946S	Stable
9L24 (Oakland 946S - Lanfine 959S)	3-phase fault at Lanfine 959S	Stable
9L29 (Oakland 946S - Coyote Lake 963S)	3-phase fault at Oakland 946S	Stable
9L29 (Oakland 946S - Coyote Lake 963S)	3-phase fault at Coyote Lake 963S	Stable
9L20 (Cordel 755S - Nevis 766S)	3-phase fault at Cordel 755S	Stable
9L20 (Cordel 755S - Nevis 766S)	3-phase fault at Nevis 766S	Stable
9L16 (Tinchebray 972S - Cordel 755S)	3-phase fault at Cordel 755S	Stable
9L16 (Tinchebray 972S - Cordel 755S)	3-phase fault at Tinchebray 972S	Stable
9L59 (Anderson 801S - Tinchebray 972S)	3-phase fault at Anderson 801S	Stable
9L59 (Anderson 801S - Tinchebray 972S)	3-phase fault at Tinchebray 972S	Stable
9L966 (Pemukan 932S - Hansman Lake 650S)	3-phase fault at Pemukan 932S	Stable
9L966 (Pemukan 932S - Hansman Lake 650S)	3-phase fault at Hansman Lake 650S	Stable
912L\9L912 (Nevis 766S - Red Deer 63S)	3-phase fault at Nevis 766S	Stable
912L\9L912 (Nevis 766S - Red Deer 63S)	3-phase fault at Red Deer 63S	Stable

4. Short-Circuit Study Results

4.1. Pre-Project

Pre-Project short-circuit current levels are provided in Table 4-1.[3]

Table 4-1: Short-Circuit Current Levels for the 2019 WP Pre-Project Scenario Case B

Substation Name and Number	Base Voltage (kV)	Pre-Fault Voltage (kV)	3-Φ Fault (kA)	Positive Sequence Thevenin Source Impedance (R1+jX1) (pu)	1-Φ Fault (kA)	Zero Sequence Thevenin Source Impedance (R0+jX0) (pu)
Anderson 801S	240	257.9	13.8	0.0029 + 0.0196j	15.5	0.0015 + 0.0145j
Anderson 801S	138	149.2	4.7	0.011 + 0.1019j	5.0	0.0042 + 0.0828j
Cordel 755S	240	255.4	11.4	0.0038 + 0.0225j	12.3	0.0016 + 0.0185j
Halkirk 615S	240	256.7	7.3	0.0055 + 0.0359j	7.6	0.0033 + 0.0312j
Hansman Lake 650S	138	142.0	8.3	0.0152 + 0.0513j	8.3	0.0055 + 0.0536j
Hansman Lake 650S	240	256.8	6.3	0.0107 + 0.0407j	6.8	0.0039 + 0.0328j
Oakland 946S	240	257.9	12.5	0.0032 + 0.0216j	12.5	0.0041 + 0.0225j
Paintearth 863S	240	256.0	7.3	0.0071 + 0.0353j	5.9	0.0145 + 0.0594j
Sheerness 807S	240	258.0	13.3	0.003 + 0.0203j	14.8	0.0016 + 0.0158j
Sheerness 807S	240	258.0	13.3	0.003 + 0.0203j	14.8	0.0017 + 0.0157j
Tinchebray 972S	240	256.2	9.8	0.0044 + 0.0266j	9.5	0.0046 + 0.0293j

4.2. Post-Project

Post-Project short-circuit current levels are provided in Table 4-2 and Table 4-3.

[3] Short-circuit current studies were based on modeling information provided to the AESO by third parties. The authenticity of the modeling information has not been validated. Fault levels could change as a result of system developments, new customer connections, or additional generation in the area. It is recommended that these changes be monitored and fault levels reviewed to ensure that the fault levels are within equipment operating limits. The information provided in this study should not be used as the sole source of information for electrical equipment specifications or for the design of safety-grounding systems.

Table 4-2: Short-Circuit Current Levels for the 2019 WP Post-Project Scenario Case B

Substation Name and Number	Base Voltage (kV)	Pre-Fault Voltage (kV)	3-Φ Fault (kA)	Positive Sequence Thevenin Source Impedance (R1+jX1) (pu)	1-Φ Fault (kA)	Zero Sequence Thevenin Source Impedance (R0+jX0) (pu)
Anderson 801S	240	257.4	13.9	0.0029 + 0.0195j	15.5	0.0015 + 0.0145j
Anderson 801S	138	149.0	4.7	0.011 + 0.1017j	5.0	0.0042 + 0.0827j
Cordel 755S	240	254.5	12.2	0.0035 + 0.0212j	12.9	0.0017 + 0.0181j
Halkirk 615S	240	255.2	8.2	0.0046 + 0.0317j	8.8	0.0025 + 0.0249j
Hansman Lake 650S	138	142.0	8.4	0.0149 + 0.0508j	8.3	0.0055 + 0.0536j
Hansman Lake 650S	240	256.8	6.4	0.0105 + 0.04j	6.9	0.0039 + 0.0328j
Oakland 946S	240	257.5	12.6	0.0032 + 0.0215j	12.6	0.0041 + 0.0225j
Paintearth 863S	240	255.3	7.5	0.0067 + 0.0341j	6.0	0.0146 + 0.0591j
Sheerness 807S	240	257.6	13.4	0.003 + 0.0202j	14.8	0.0016 + 0.0157j
Sheerness 807S	240	257.6	13.4	0.003 + 0.0202j	14.8	0.0017 + 0.0157j
Tinchebray 972S	240	255.0	10.6	0.0038 + 0.0243j	10.3	0.0044 + 0.0266j
Pioneer 805S	240	255.2	8.4	0.0045 + 0.0308j	9.1	0.0027 + 0.0246j
Lanes Lake 973S	240	255.1	7.0	0.006 + 0.037j	7.1	0.0037 + 0.0351j

Table 4-3: Short-Circuit Current Levels for the 2026 WP Post-Project Scenario Case B

Substation Name and Number	Base Voltage (kV)	Pre-Fault Voltage (kV)	3-Φ Fault (kA)	Positive Sequence Thevenin Source Impedance (R1+jX1) (pu)	1-Φ Fault (kA)	Zero Sequence Thevenin Source Impedance (R0+jX0) (pu)
Anderson 801S	240	257.1	14.7	0.0024 + 0.0175j	16.1	0.0014 + 0.0138j
Anderson 801S	138	149.7	4.7	0.0099 + 0.0963j	5.0	0.004 + 0.0796j
Cordel 755S	240	256.8	12.6	0.0031 + 0.0202j	13.1	0.0018 + 0.0181j
Halkirk 615S	240	256.0	8.3	0.0043 + 0.0308j	8.9	0.0025 + 0.0247j
Hansman Lake 650S	138	142.9	8.7	0.0132 + 0.0483j	9.0	0.0039 + 0.0455j
Hansman Lake 650S	240	256.8	6.9	0.0086 + 0.0363j	8.0	0.0023 + 0.0226j
Oakland 946S	240	256.8	13.3	0.0026 + 0.0194j	13.3	0.0033 + 0.0198j
Paintearth 863S	240	256.9	7.8	0.0061 + 0.0327j	6.1	0.0146 + 0.058j
Sheerness 807S	240	257.0	14.1	0.0025 + 0.0182j	15.2	0.0016 + 0.015j
Sheerness 807S	240	257.4	14.1	0.0025 + 0.0183j	15.1	0.0018 + 0.0153j
Tinchebray 972S	240	256.7	10.9	0.0035 + 0.0234j	10.5	0.0044 + 0.0266j
Pioneer 805S	240	256.1	8.5	0.0042 + 0.0298j	9.1	0.0027 + 0.0245j
Lanes Lake 973S	240	256.0	7.0	0.0057 + 0.0362j	7.1	0.0037 + 0.035j

5. Mitigation Measure Development and Evaluation

The Studies Consultant, in consultation with the AESO, developed mitigation measures to address the system performance issues that were identified in the post-Project scenarios for Alternative 2. Existing remedial action schemes (RASs) are described in Section 1.2.2.2 of Attachment A1. As part of this Project, mitigation measures will not be specifically developed for the POD bus voltage deviations observed under certain Category B conditions during pre-Project and post-Project scenarios.

There are issues following the loss of Metiskow 648S Substation Transformer T1 (648ST1) that are observed in pre-Project and post-Project scenarios. A voltage collapse was observed following the loss of 648ST1 in some pre-Project and post-Project studied scenarios. In addition, in the 2019 SP pre-Project Case A scenario, voltage criteria violations and POD bus voltage deviations were observed. Thermal criteria violations were also observed in the 2019 SL pre-Project and post-Project scenarios. Real-time operational practices are already in place to mitigate these violations and are effective in addressing the violations observed in the studied pre-Project and post-Project scenarios.

5.1. Case A

5.1.1. Pre-Project

Pre-Project mitigation measures are summarized in Table 5-1.

Table 5-1: Case A Pre-Project Mitigation Measures

Mitigation Measure	Mitigated Reliability Criteria Violation	
	Thermal Criteria Violation Type	Transmission Facility
Existing RAS 134	Above seasonal continuous rating	174L (Bardo 197S - North Holden 395S)
Planned RAS 139[a]	Above seasonal continuous rating	7L85 (Bullpound 803S - Anderson 801S)
		7L85 (Wintering Hills 804S - Bullpound 803S)
		766S901T (Nevis 766S Transformer 901T)
		801S901T (Anderson 801S Transformer 901T)
		7L16 (Nevis 766S - Heatburg 948S)
		7L159 (Ghost Pine 114S Tap - Heatburg 948S)
Planned RAS 138[b]	Above seasonal continuous rating	7L50 (Buffalo Creek 526S - Jarrow 252S Tap)
		7L129 (Bauer 918S Tap - Vermilion 710S)
		7L129 (Buffalo Creek 526S - Bauer 918S Tap)

Mitigation Measure	Mitigated Reliability Criteria Violation	
	Thermal Criteria Violation Type	Transmission Facility
TFO capital maintenance project to restore ratings on the 144 kV transmission line 7L127	Above short-term (emergency) rating	7L127 (Monitor 774S - Pemukan 932S)
Real time operational practices	Above short-term (emergency) rating	7L14 (Kitscoty 705S - Hill 751S)
		7L130 (Vermilion 710S - Kitscoty 705S)
	Above seasonal continuous rating	7L224 (Hansman Lake 650S - Monitor 774S)
		9L51 (Sedalia 363S - Pemukan 932S)
		749L (Edgerton 899S - Killarney Lake 267S Tap)
		749L (Metiskow 648S - Killarney Lake 267S Tap)
		7L749 (Edgerton 899S - Briker 880S Tap)

[a] RAS 139 is an existing RAS (See Section 1.2.2.2 of Attachment A1). Modifications to existing RAS 139 were proposed for the approved Suncor Hand Hills Wind Project and BluEarth Hand Hills Wind Project connections. These modifications to RAS 139 were identified in the approved *Suncor Hand Hills Wind Energy Connection Needs Identification Document (NID)* and the approved *BluEarth Hand Hills Wind Energy Connection NID*, as originally approved by AUC Decision 2482-D01-2015 and Approval 2482-D03-2015 and Approval 2482-D02-2015, respectively. Further modifications to RAS 139 were proposed for the proposed Sharp Hills Wind Farm Connection and identified in the *Sharp Hills Wind Farm Connection NID*, as originally filed with the Commission in AUC Proceeding 23066 and Application 23066-A001 . This modified version of RAS 139 is referred to herein as "Planned RAS 139".

[b] RAS 138 is an existing RAS (See Section 1.2.2.2 of Attachment A1). Modifications to existing RAS 138 were proposed for the proposed Sharp Hills Wind Project Connection in the *Sharp Hills Wind Farm Connection NID*. This modified version of RAS 138 is referred to herein as "Planned RAS 138".

5.1.2. Post-Project

Post-Project mitigation measures are summarized in Table 5-2.

Table 5-2: Case A Post-Project Mitigation Measures

Mitigation Measure	Mitigated Reliability Criteria Violation	
	Thermal Criteria Violation Type	Transmission Facility
Existing RAS 134	Above seasonal continuous rating	174L (Bardo 197S - North Holden 395S)
Modify Planned RAS 139[c]	Above short-term (emergency) rating	766S901T (Nevis 766S Transformer 901T)
	Above seasonal continuous rating	7L85 (Bullpound 803S - Anderson 801S)
		7L85 (Wintering Hills 804S - Bullpound 803S)
		766S901T (Nevis 766S Transformer 901T)
		801S901T (Anderson 801S Transformer 901T)
		7L16 (Nevis 766S - Heatburg 948S)
		7L159 (Ghost Pine 114S Tap - Heatburg 948S)
Modify Planned RAS 138[c]	Above seasonal continuous rating	701L (North Holden 395S - Strome 223S)
		7L50 (Buffalo Creek 526S - Jarrow 252S Tap)
		7L129 (Buffalo Creek 526S - Bauer 918S Tap)
		7L701 (Strome 223S - Heisler 764S Tap)
TFO capital maintenance project to restore ratings on the 144 kV transmission line 7L127	Above short-term (emergency) rating	7L127 (Monitor 774S - Pemukan 932S)

Mitigation Measure	Mitigated Reliability Criteria Violation	
	Thermal Criteria Violation Type	Transmission Facility
Real time operational practices	Above short-term (emergency) rating	7L14 (Kitscoty 705S - Hill 751S)
		7L130 (Vermilion 710S - Kitscoty 705S)
	Above seasonal continuous rating	7L224 (Hansman Lake 650S - Monitor 774S)
		9L51 (Sedalia 363S - Pemukan 932S)
		749L (Edgerton 899S - Killarney Lake 267S Tap)
		749L (Metiskow 648S - Killarney Lake 267S Tap)
		7L749 (Edgerton 899S - Briker 880S Tap)

[c] In this section, "Modify" refers to adding the Project to the logic of the respective RAS.

5.2. Case B

5.2.1. Pre-Project

Pre-Project mitigation measures are summarized in Table 5-3.

Table 5-3: Case B Pre-Project Mitigation Measures

Mitigation Measure	Mitigated Reliability Criteria Violation	
	Thermal Criteria Violation Type	Transmission Facility
Existing RAS 134	Above seasonal continuous rating	174L (Bardo 197S - North Holden 395S)
Planned RAS 139	Above seasonal continuous rating	7L85 (Bullpound 803S - Anderson 801S)
		7L85 (Wintering Hills 804S - Bullpound 803S)
		766S901T (Nevis 766S Transformer 901T)
		7L16 (Nevis 766S - Heatburg 948S)
		7L159 (Ghost Pine 114S Tap - Heatburg 948S)
Planned 7L129 RAS[d]	Above seasonal continuous rating	7L129 (Bauer 918S Tap - Vermilion 710S)
		7L129 (Buffalo Creek 526S - Bauer 918S Tap)
TFO capital maintenance project to restore ratings on the 144 kV transmission line 7L127	Above short-term (emergency) rating	7L127 (Monitor 774S - Pemukan 932S)
Real time operational practices	Above short-term (emergency) rating	7L14 (Kitscoty 705S - Hill 751S)
		7L130 (Vermilion 710S - Kitscoty 705S)
	Above seasonal continuous rating	7L224 (Hansman Lake 650S - Monitor 774S)
		749L (Edgerton 899S - Killarney Lake 267S Tap)

[d] The planned 7L129 RAS was proposed for the proposed Irma Wind Power Project Connection in the *Irma Wind Power Project Connection NID*, as originally filed with the Commission in AUC Proceeding 22857 and Application 22857-A001. Modifications to the planned 7L129 RAS were proposed for the proposed Sharp Hills Wind Project Connection in the *Sharp Hills Wind Farm Connection NID*. This modified version of 7L129 RAS is referred to herein as "Planned 7L129 RAS".

5.2.2. Post-Project

Post-Project mitigation measures are summarized in Table 5-4.

Table 5-4: Case B Post-Project Mitigation Measures

Mitigation Measure	Mitigated Reliability Criteria Violation	
	Thermal Criteria Violation Type	Transmission Facility
Existing RAS 134	Above seasonal continuous rating	174L (Bardo 197S - North Holden 395S)
		7L701 (Strome 223S - Heisler 764S Tap)
		701L (North Holden 395S - Strome 223S)
Modify Planned RAS 139	Above short-term (emergency) rating	766S901T (Nevis 766S Transformer 901T)
	Above seasonal continuous rating	7L85 (Bullpound 803S - Anderson 801S)
		7L85 (Wintering Hills 804S - Bullpound 803S)
		766S901T (Nevis 766S Transformer 901T)
		7L16 (Nevis 766S - Heatburg 948S)
		7L159 (Ghost Pine 114S Tap - Heatburg 948S)
Modify Planned 7L129 RAS	Above seasonal continuous rating	7L129 (Bauer 918S Tap - Vermilion 710S)
		7L129 (Buffalo Creek 526S - Bauer 918S Tap)
		912L\9L912 (Red Deer 63S - Nevis 766S)
		7L701 (Strome 223S - Heisler 764S Tap)
		701L (North Holden 395S - Strome 223S)
TFO capital maintenance project to restore ratings on the 144 kV transmission line 7L127	Above short-term (emergency) rating	7L127 (Monitor 774S - Pemukan 932S)
Real time operational practices	Above short-term (emergency) rating	7L14 (Kitscoty 705S - Hill 751S)
		7L130 (Vermilion 710S - Kitscoty 705S)
	Above seasonal continuous rating	9L51 (Sedalia 363S - Pemukan 932S)
		749L (Edgerton 899S - Killarney Lake 267S Tap)

5.3. Mitigation Measure Evaluation

This section describes the results of the power flow studies that were performed to assess the impact of the Project on the performance of the AIES following the implementation of proposed mitigation measures.

The post-mitigation measures studies were performed under Category B conditions for the 2019 SL, SP and WP scenarios using Alternative 2 and the RASs described in Sections 5.1 and 5.2.

The post-mitigation power flow diagrams for selected Category B conditions are provided in Attachment A6. The post-mitigation power flow diagrams present only those post-Project contingencies that result in thermal criteria violations that require RAS mitigation. The post-Project contingencies that result in thermal criteria violations that can be mitigated by real time operational practices or TFO capital maintenance projects were not studied. Any RAS

mitigations that resulted in cascading overloads were not assessed as part of the mitigation, and will be managed through real-time operational practices.

5.3.1. 2019 Summer Light Post-Project Case A

Category B conditions

The thermal criteria violations observed under certain Category B conditions in the post-Project studies were mitigated by the RASs described in Section 5.1, as shown in Table 5-5.

Table 5-5: Post-RAS Power Flow Study Results under certain Category B Conditions for the 2019 SL Post-Project Scenario Case A

Contingency (System Element Lost)	Details of Violation (Violation Observed On)	Seasonal Continuous Rating (MVA)	Short-term (Emergency) Rating (MVA)	Post-Project Results		Post-RAS Action Results	
				Power Flow (MVA)	% Loading	Power Flow (MVA)	% Loading
766S901T (Nevis 766S Transformer 901T)	174L (Bardo 197S - North Holden 395S)	85.0	94.0	107.0	125.9	0.0	0.0
912L\9L912 (Red Deer 63S - Nevis 766S)	174L (Bardo 197S - North Holden 395S)	85.0	94.0	106.9	125.8	0.0	0.0
9L20 (Nevis 766S - Cordel 755S)	174L (Bardo 197S - North Holden 395S)	85.0	94.0	93.1	109.5	0.0	0.0
	766S901T (Nevis 766S Transformer 901T)	100.0	100.0	110.0	110.0	96.9	96.9
9L29 (Oakland 946S - Coyote Lake 963S)	766S901T (Nevis 766S Transformer 901T)	100.0	100.0	115.5	115.5	87.3	87.3
	7L159 (Ghost Pine 114S Tap - Heatburg 948S)	109.3	123.6	119.3	109.2	91.8	84.0
	7L16 (Nevis 766S - Heatburg 948S)	109.3	123.6	115.9	106.0	88.3	80.8
	7L85 (Bullpound 803S - Anderson 801S)	109.3	123.6	128.3	117.4	90.5	82.8
	7L85 (Wintering Hills 804S - Bullpound 803S)	109.3	123.6	134.3	122.9	96.5	88.3
	801S901T (Anderson 801S Transformer 901T)	125.0	125.0	125.7	100.6	87.5	70.0

5.3.2. 2019 Summer Light Post-Project Case B

Category B conditions

The thermal criteria violations observed under certain Category B conditions in the post-Project studies were mitigated by the RASs described in Section 5.2, as shown in Table 5-6.

Table 5-6: Post-RAS Power Flow Study Results under certain Category B Conditions for the 2019 SL Post-Project Scenario Case B

Contingency (System Element Lost)	Details of Violation (Violation Observed On)	Seasonal Continuous Rating (MVA)	Short-term (Emergency) Rating (MVA)	Post-Project Results		Post-RAS Action Results	
				Power Flow (MVA)	% Loading	Power Flow (MVA)	% Loading
757S912T (Battle River 757S Transformer 912T)	174L (Bardo 197S - North Holden 395S)	85.0	94.0	88.5	104.2	0.0	0.0
766S901T (Nevis 766S Transformer 901T)	174L (Bardo 197S - North Holden 395S)	85.0	94.0	136.4	160.4	0.0	0.0
	701L (North Holden 395S - Strome 223S)	119.0	131.0	123.2	103.5	62.5	52.5
912L\9L912 (Red Deer 63S - Nevis 766S)	174L (Bardo 197S - North Holden 395S)	85.0	94.0	136.2	160.3	0.0	0.0
	701L (North Holden 395S - Strome 223S)	119.0	131.0	123.1	103.4	62.5	52.5
9L20 (Nevis 766S - Cordel 755S)	174L (Bardo 197S - North Holden 395S)	85.0	94.0	120.0	141.2	0.0	0.0
	766S901T (Nevis 766S Transformer 901T)	100.0	100.0	127.7	127.7	94.1	94.1
9L29 (Oakland 946S - Coyote Lake 963S)	766S901T (Nevis 766S Transformer 901T)	100.0	100.0	120.8	120.8	92.6	92.6
	7L159 (Ghost Pine 114S Tap - Heatburg 948S)	109.3	123.6	122.0	111.7	94.5	86.5
	7L16 (Nevis 766S - Heatburg 948S)	109.3	123.6	118.6	108.5	91.2	83.4
	7L85 (Bullpound 803S - Anderson 801S)	109.3		125.5	114.8	87.5	80.1
	7L85 (Wintering Hills 804S - Bullpound 803S)	109.3	123.6	131.5	120.3	93.6	85.6
9L46 (Lanfine 959S - Sedalia 363S)	174L (Bardo 197S - North Holden 395S)	85.0	94.0	86.9	102.2	0.0	0.0
9L80 (Battle River 757S - Cordel 755S)	174L (Bardo 197S - North Holden 395S)	85.0	94.0	88.6	104.2	0.0	0.0

5.3.3. 2019 Summer Peak Post-Project Case A

Category B conditions

Most thermal criteria violations observed under certain Category B conditions in the post-Project studies were mitigated by the RASs described in Section 5.1, as shown in Table 5-7. After RAS action, real-time operational practices are required to fully alleviate certain thermal criteria violations observed on 138 kV transmission line 701L.

Table 5-7: Post-RAS Power Flow Study Results under certain Category B Conditions for the 2019 SP Post-Project Scenario Case A

Contingency (System Element Lost)	Details of Violation (Violation Observed On)	Seasonal Continuous Rating (MVA)	Short-term (Emergency) Rating (MVA)	Post-Project Results		Post-RAS Action Results	
				Power Flow (MVA)	% Loading	Power Flow (MVA)	% Loading
395ST1 (North Holden 395S Transformer T1)	7L50 (Buffalo Creek 526S - Jarrow 252S Tap)	109.2	123.6	119.0	108.9	106.9	97.9
701L (North Holden 395S - Strome 223S)	7L50 (Buffalo Creek 526S - Jarrow 252S Tap)	109.2	123.6	114.0	104.4	102.1	93.5
749L\749AL (Metiskow 648S - Edgerton 899S)	7L129 (Buffalo Creek 526S - Bauer 918S Tap)	109.3	123.6	113.1	103.5	96.4	88.2
	7L50 (Buffalo Creek 526S - Jarrow 252S Tap)	109.2	123.6	133.1	121.9	106.3	97.3
766S901T (Nevis 766S Transformer 901T)	701L (North Holden 395S - Strome 223S)	119.0	131.0	121.6	102.1	123.2	103.5[a]
	7L50 (Buffalo Creek 526S - Jarrow 252S Tap)	109.2	123.6	123.6	113.2	108.1	99.0
7L42 (Hill 751S - Lloydminster 716S)	7L50 (Buffalo Creek 526S - Jarrow 252S Tap)	109.2	123.6	115.0	105.3	101.6	93.0
7L701\7LA701\ 701L (Battle River 757S - Heisler 764S - Strome 223S)	7L50 (Buffalo Creek 526S - Jarrow 252S Tap)	109.2	123.6	118.2	108.2	106.1	97.2
7L749\749L\7LB749 (Edgerton 899S - Briker 880S - Lloydminster 716S)	7L50 (Buffalo Creek 526S - Jarrow 252S Tap)	109.2	123.6	125.7	115.1	104.7	95.9
7L77 (North Holden 395S - Vegreville 709S)	7L50 (Buffalo Creek 526S - Jarrow 252S Tap)	109.2	123.6	112.7	103.2	100.2	91.8
899ST3A (Edgerton 899S Transformer T3A)	7L50 (Buffalo Creek 526S - Jarrow 252S Tap)	109.2	123.6	128.5	117.7	107.0	98.0
912L\9L912 (Red Deer 63S - Nevis 766S)	701L (North Holden 395S - Strome 223S)	119.0	131.0	121.6	102.2	123.2	103.5[a]
	7L50 (Buffalo Creek 526S - Jarrow 252S Tap)	109.2	123.6	123.6	113.2	108.1	99.0
9L20 (Nevis 766S - Cordel 755S)	7L50 (Buffalo Creek 526S - Jarrow 252S Tap)	109.2	123.6	116.2	106.4	101.2	92.7
9L29 (Oakland 946S - Coyote Lake 963S)	766S901T (Nevis 766S Transformer 901T)	100.0	100.0	103.0	103.0	75.4	75.4

Contingency (System Element Lost)	Details of Violation (Violation Observed On)	Seasonal Continuous Rating (MVA)	Short-term (Emergency) Rating (MVA)	Post-Project Results		Post-RAS Action Results	
				Power Flow (MVA)	% Loading	Power Flow (MVA)	% Loading
	7L159 (Ghost Pine 114S Tap - Heatburg 948S)	109.3	123.6	122.1	111.7	95.1	87.0
	7L16 (Nevis 766S - Heatburg 948S)	109.3	123.6	118.0	107.9	91.0	83.3
	7L85 (Wintering Hills 804S - Bullpound 803S)	109.3	123.6	114.2	104.5	76.3	69.8
EATL (Newell 2075S – Heathfield 2029S)	701L (North Holden 395S - Strome 223S)	119.0	131.0	119.9	100.8	112.1	94.2
	7L50 (Buffalo Creek 526S - Jarrow 252S Tap)	109.2	123.6	125.4	114.8	107.3	98.3

[a] Real-time operational practices are required to mitigate this overload on 701L.

5.3.4. 2019 Summer Peak Post-Project Case B

Category B conditions

The thermal criteria violations observed under certain Category B conditions in the post-Project studies were mitigated by the RASs described in Section 5.2, as shown in Table 5-8.

Table 5-8: Post-RAS Power Flow Study Results under certain Category B Conditions for the 2019 SP Post-Project Scenario Case B

Contingency (System Element Lost)	Details of Violation (Violation Observed On)	Seasonal Continuous Rating (MVA)	Short-term (Emergency) Rating (MVA)	Post-Project Results		Post-RAS Action Results	
				Power Flow (MVA)	% Loading	Power Flow (MVA)	% Loading
296ST1 OR 296ST2 (Rosyth 286S Transformer T1 or T2)	7L129 (Buffalo Creek 526S - Bauer 918S Tap)	109.3	123.6	109.9	100.5	105.6	96.6
377ST1 (Hardisty 377S Transformer T1)	7L129 (Buffalo Creek 526S - Bauer 918S Tap)	109.3	123.6	111.9	102.4	103.4	94.6
395ST1 (North Holden 395S Transformer T1)	7L129 (Bauer 918S Tap - Vermilion 710S)	109.3	123.6	118.6	108.6	106.5	97.4
	7L129 (Buffalo Creek 526S - Bauer 918S Tap)	109.3	123.6	127.1	116.3	107.4	98.3
51ST3 OR 51ST4 (Wainwright 51S Transformer T3 or T4)	7L129 (Buffalo Creek 526S - Bauer 918S Tap)	109.3	123.6	112.8	103.2	104.3	95.4

Contingency (System Element Lost)	Details of Violation (Violation Observed On)	Seasonal Continuous Rating (MVA)	Short-term (Emergency) Rating (MVA)	Post-Project Results		Post-RAS Action Results	
				Power Flow (MVA)	% Loading	Power Flow (MVA)	% Loading
650ST1 (Hansman Lake 650S Transformer T1)	7L129 (Buffalo Creek 526S - Bauer 918S Tap)	109.3	123.6	109.3	100.0	105.0	96.1
681L (Tucuman 478S - Hardisty 377S)	7L129 (Buffalo Creek 526S - Bauer 918S Tap)	109.3	123.6	110.4	101.0	106.1	97.1
701L (North Holden 395S - Strome 223S)	7L129 (Bauer 918S Tap - Vermilion 710S)	109.3	123.6	117.4	107.4	104.3	95.4
	7L129 (Buffalo Creek 526S - Bauer 918S Tap)	109.3	123.6	125.8	115.1	104.4	95.5
749L\749AL (Metiskow 648S - Edgerton 899S)	7L129 (Bauer 918S Tap - Vermilion 710S)	109.3	123.6	131.7	120.5	103.4	94.6
	7L129 (Buffalo Creek 526S - Bauer 918S Tap)	109.3	123.6	139.9	128.0	107.4	98.3
766S901T (Nevis 766S Transformer 901T)	701L (North Holden 395S - Strome 223S)	119.0	131.0	125.3	105.3	103.8	87.2
	7L701 (Strome 223S - Heisler 764S Tap)	139.9	158.0	142.4	101.8	120.7	86.3
	7L129 (Bauer 918S Tap - Vermilion 710S)	109.3	123.6	129.6	118.6	107.2	98.1
	7L129 (Buffalo Creek 526S - Bauer 918S Tap)	109.3	123.6	138.2	126.4	103.7	94.9
769L\769AL (Hardisty 377S - Clipper 656S - Rosyth 286S)	7L129 (Buffalo Creek 526S - Bauer 918S Tap)	109.3	123.6	109.9	100.5	105.6	96.6
7L42 (Hill 751S - Lloydminster 716S)	7L129 (Bauer 918S Tap - Vermilion 710S)	109.3	123.6	113.8	104.1	106.1	97.1
	7L129 (Buffalo Creek 526S - Bauer 918S Tap)	109.3	123.6	122.0	111.6	106.6	97.5
7L701\7LA701\ 701L (Battle River 757S - Heisler 764S - Strome 223S)	7L129 (Bauer 918S Tap - Vermilion 710S)	109.3	123.6	121.5	111.2	104.1	95.2
	7L129 (Buffalo Creek 526S - Bauer 918S Tap)	109.3	123.6	130.0	119.0	105.1	96.2
7L749\749L\7LB749 (Edgerton 899S - Briker 880S - Lloydminster 716S)	7L129 (Bauer 918S Tap - Vermilion 710S)	109.3	123.6	124.3	113.7	105.3	96.3
	7L129 (Buffalo Creek 526S - Bauer 918S Tap)	109.3	123.6	132.4	121.1	106.5	97.4

Contingency (System Element Lost)	Details of Violation (Violation Observed On)	Seasonal Continuous Rating (MVA)	Short-term (Emergency) Rating (MVA)	Post-Project Results		Post-RAS Action Results	
				Power Flow (MVA)	% Loading	Power Flow (MVA)	% Loading
7L77 (North Holden 395S - Vegreville 709S)	7L129 (Bauer 918S Tap - Vermilion 710S)	109.3	123.6	112.0	102.4	104.1	95.2
	7L129 (Buffalo Creek 526S - Bauer 918S Tap)	109.3	123.6	120.4	110.1	104.5	95.6
885L (Hansman Lake 650S - Metiskow 648S)	7L129 (Buffalo Creek 526S - Bauer 918S Tap)	109.3	123.6	109.5	100.2	105.3	96.3
899ST3A (Edgerton 899S Transformer T3A)	7L129 (Bauer 918S Tap - Vermilion 710S)	109.3	123.6	127.1	116.3	101.3	92.7
	7L129 (Buffalo Creek 526S - Bauer 918S Tap)	109.3	123.6	135.2	123.7	107.3	98.2
912L\9L912 (Red Deer 63S - Nevis 766S)	701L (North Holden 395S - Strome 223S)	119.0	131.0	125.3	105.3	103.9	87.3
	7L701 (Strome 223S - Heisler 764S Tap)	139.9	158.0	142.4	101.8	120.9	86.4
	7L129 (Bauer 918S Tap - Vermilion 710S)	109.3	123.6	129.6	118.5	107.2	98.1
	7L129 (Buffalo Creek 526S - Bauer 918S Tap)	109.3	123.6	138.2	126.4	103.8	95.0
954L (Hansman Lake 650S - Metiskow 648S)	7L129 (Buffalo Creek 526S - Bauer 918S Tap)	109.3	123.6	109.4	100.1	105.1	96.2
9L20 (Nevis 766S - Cordel 755S)	766S901T (Nevis 766S Transformer 901T)	100.0	100.0	100.4	100.4	87.5	87.5
	7L129 (Bauer 918S Tap - Vermilion 710S)	109.3	123.6	121.8	111.4	103.5	94.7
	7L129 (Buffalo Creek 526S - Bauer 918S Tap)	109.3	123.6	130.3	119.2	108.1	98.9
9L29 (Oakland 946S - Coyote Lake 963S)	766S901T (Nevis 766S Transformer 901T)	100.0	100.0	100.4	100.4	72.8	72.8
	7L159 (Ghost Pine 114S Tap - Heatburg 948S)	109.3	123.6	118.3	108.2	91.5	83.7
	7L16 (Nevis 766S - Heatburg 948S)	109.3	123.6	114.2	104.5	87.4	80.0
	7L85 (Wintering Hills 804S - Bullpound 803S)	109.3	123.6	114.2	104.4	76.5	70.0
9L46 (Lanfine 959S - Sedalia 363S)	7L129 (Buffalo Creek 526S - Bauer 918S Tap)	109.3	123.6	110.0	100.6	105.7	96.7

Contingency (System Element Lost)	Details of Violation (Violation Observed On)	Seasonal Continuous Rating (MVA)	Short-term (Emergency) Rating (MVA)	Post-Project Results		Post-RAS Action Results	
				Power Flow (MVA)	% Loading	Power Flow (MVA)	% Loading
9L933\933L (Ware Junction 132S - Anderson 801S)	7L129 (Buffalo Creek 526S - Bauer 918S Tap)	109.3	123.6	109.9	100.6	105.7	96.7
9L934\934L (Ware Junction 132S - Anderson 801S)	7L129 (Buffalo Creek 526S - Bauer 918S Tap)	109.3	123.6	110.1	100.8	105.9	96.9
9L950\950L (Ware Junction 132S - Anderson 801S)	7L129 (Buffalo Creek 526S - Bauer 918S Tap)	109.3	123.6	109.9	100.5	105.6	96.6
EATL (Newell 2075S – Heathfield 2029S)	701L (North Holden 395S - Strome 223S)	119.0	131.0	119.7	100.6	110.1	92.5
	7L129 (Bauer 918S Tap - Vermilion 710S)	109.3	123.6	128.6	117.7	107.9	98.7
	7L129 (Buffalo Creek 526S - Bauer 918S Tap)	109.3	123.6	137.2	125.6	109.0	99.7

5.3.5. 2019 Winter Peak Post-Project Case A

Category B conditions

Most thermal criteria violations observed under certain Category B conditions in the post-Project studies were mitigated by the RASs described in Section 5.1, as shown in Table 5-9. After RAS action, real-time operational practices are required to fully alleviate certain thermal criteria violations observed on 138 kV transmission line 701L and 144 kV transmission line 7L701.

Table 5-9: Post-RAS Power Flow Study Results under certain Category B Conditions for the 2019 WP Post-Project Scenario Case A

Contingency (System Element Lost)	Details of Violation (Violation Observed On)	Seasonal Continuous Rating (MVA)	Short-term (Emergency) Rating (MVA)	Post-Project Results		Post-RAS Action Results	
				Power Flow (MVA)	% Loading	Power Flow (MVA)	% Loading
749L\749AL (Metiskow 648S - Edgerton 899S)	7L50 (Buffalo Creek 526S - Jarrow 252S Tap)	139.8	150.5	149.1	106.7	132.9	95.1
766S901T (Nevis 766S Transformer	701L (North Holden 395S - Strome 223S)	146.0	161.0	152.3	104.3	153.8	105.3[a]

Contingency (System Element Lost)	Details of Violation (Violation Observed On)	Seasonal Continuous Rating (MVA)	Short-term (Emergency) Rating (MVA)	Post-Project Results		Post-RAS Action Results	
				Power Flow (MVA)	% Loading	Power Flow (MVA)	% Loading
901T)	7L701 (Strome 223S - Heisler 764S Tap)	169.0	169.0	170.0	100.6	171.4	101.4[b]
	7L50 (Buffalo Creek 526S - Jarrow 252S Tap)	139.8	150.5	146.0	104.4	129.9	92.9
7L749\749L\7LB749 (Edgerton 899S - Briker 880S - Lloydminster 716S)	7L50 (Buffalo Creek 526S - Jarrow 252S Tap)	139.8	150.5	140.5	100.5	126.0	90.1
899ST3A (Edgerton 899S Transformer T3A)	7L50 (Buffalo Creek 526S - Jarrow 252S Tap)	139.8	150.5	143.7	102.8	128.6	92.0
912L\9L912 (Red Deer 63S - Nevis 766S)	701L (North Holden 395S - Strome 223S)	146.0	161.0	152.1	104.2	153.6	105.2[a]
	7L701 (Strome 223S - Heisler 764S Tap)	169.0	169.0	169.8	100.5	171.2	101.3[b]
	7L50 (Buffalo Creek 526S - Jarrow 252S Tap)	139.8	150.5	145.6	104.1	129.7	92.8
9L20 (Nevis 766S - Cordel 755S)	766S901T (Nevis 766S Transformer 901T)	100.0	100.0	110.8	110.8	98.7	98.7

[a] Real-time operational practices are required to mitigate this overload on 701L.

[b] Real-time operational practices are required to mitigate this overload on 7L701.

5.3.6. 2019 Winter Peak Post-Project Case B

Category B conditions

The thermal criteria violations observed under certain Category B conditions in the post-Project studies were mitigated by the RASs described in Section 5.2, as shown in Table 5-10.

Table 5-10: Post-RAS Power Flow Study Results under certain Category B Conditions for the 2019 WP Post-Project Scenario Case B

Contingency (System Element Lost)	Details of Violation (Violation Observed On)	Seasonal Continuous Rating (MVA)	Short-term (Emergency) Rating (MVA)	Post-Project Results		Post-RAS Action Results	
				Power Flow (MVA)	% Loading	Power Flow (MVA)	% Loading

Contingency (System Element Lost)	Details of Violation (Violation Observed On)	Seasonal Continuous Rating (MVA)	Short-term (Emergency) Rating (MVA)	Post-Project Results		Post-RAS Action Results	
				Power Flow (MVA)	% Loading	Power Flow (MVA)	% Loading
395ST1 (North Holden 395S Transformer T1)	7L129 (Bauer 918S Tap - Vermilion 710S)	139.0	142.8	142.6	102.6	134.4	96.7
	7L129 (Buffalo Creek 526S - Bauer 918S Tap)	139.0	142.8	151.0	108.6	134.6	96.8
701L (North Holden 395S - Strome 223S)	7L129 (Bauer 918S Tap - Vermilion 710S)	139.0	142.8	141.7	101.9	133.0	95.7
	7L129 (Buffalo Creek 526S - Bauer 918S Tap)	139.0	142.8	149.9	107.8	132.3	95.2
749L\749AL (Metiskow 648S - Edgerton 899S)	7L129 (Bauer 918S Tap - Vermilion 710S)	139.0	142.8	154.0	110.8	134.0	96.4
	7L129 (Buffalo Creek 526S - Bauer 918S Tap)	139.0	142.8	162.5	116.9	134.3	96.6
766S901T (Nevis 766S Transformer 901T)	174L (Bardo 197S - North Holden 395S)	90.0	99.0	100.7	111.8	0.0	0.0
	701L (North Holden 395S - Strome 223S)	146.0	161.0	156.2	106.9	112.6	77.1
	7L701 (Strome 223S - Heisler 764S Tap)	169.0	169.0	174.0	102.9	131.8	78.0
	7L129 (Bauer 918S Tap - Vermilion 710S)	139.0	142.8	157.4	113.2	133.7	96.2
	7L129 (Buffalo Creek 526S - Bauer 918S Tap)	139.0	142.8	166.0	119.4	132.5	95.3
7L42 (Hill 751S - Lloydminster 716S)	7L129 (Buffalo Creek 526S - Bauer 918S Tap)	139.0	142.8	142.8	102.7	135.1	97.2
7L701\7LA701\ 701L (Battle River 757S - Heisler 764S - Strome 223S)	7L129 (Bauer 918S Tap - Vermilion 710S)	139.0	142.8	145.6	104.7	132.3	95.2
	7L129 (Buffalo Creek 526S - Bauer 918S Tap)	139.0	142.8	153.9	110.7	131.8	94.8
7L749\749L\7LB749 (Edgerton 899S - Briker 880S - Lloydminster 716S)	7L129 (Bauer 918S Tap - Vermilion 710S)	139.0	142.8	146.2	105.2	134.7	96.9
	7L129 (Buffalo Creek 526S - Bauer 918S Tap)	139.0	142.8	154.3	111.0	134.8	97.0
7L77 (North Holden 395S - Vegreville 709S)	7L129 (Buffalo Creek 526S - Bauer 918S Tap)	139.0	142.8	142.7	102.6	134.7	96.9
899ST3A (Edgerton 899S	7L129 (Bauer 918S Tap - Vermilion 710S)	139.0	142.8	149.1	107.3	133.6	96.1

Contingency (System Element Lost)	Details of Violation (Violation Observed On)	Seasonal Continuous Rating (MVA)	Short-term (Emergency) Rating (MVA)	Post-Project Results		Post-RAS Action Results	
				Power Flow (MVA)	% Loading	Power Flow (MVA)	% Loading
Transformer T3A)	7L129 (Buffalo Creek 526S - Bauer 918S Tap)	139.0	142.8	157.3	113.2	133.7	96.2
912L\9L912 (Red Deer 63S - Nevis 766S)	174L (Bardo 197S - North Holden 395S)	90.0	99.0	100.2	111.4	0.0	0.0
	701L (North Holden 395S - Strome 223S)	146.0	161.0	155.9	106.8	112.5	77.0
	7L701 (Strome 223S - Heisler 764S Tap)	169.0	169.0	173.8	102.8	131.8	78.0
	7L129 (Bauer 918S Tap - Vermilion 710S)	139.0	142.8	156.9	112.9	133.3	95.9
	7L129 (Buffalo Creek 526S - Bauer 918S Tap)	139.0	142.8	165.5	119.1	132.2	95.1
9L20 (Nevis 766S - Cordel 755S)	766S901T (Nevis 766S Transformer 901T)	100.0	100.0	115.6	115.6	96.2	96.2
	7L129 (Bauer 918S Tap - Vermilion 710S)	139.0	142.8	148.9	107.1	135.0	97.1
	7L129 (Buffalo Creek 526S - Bauer 918S Tap)	139.0	142.8	157.3	113.2	134.0	96.4
9L29 (Oakland 946S - Coyote Lake 963S)	766S901T (Nevis 766S Transformer 901T)	100.0	100.0	100.2	100.2	72.6	72.6
EATL (Newell 2075S – Heathfield 2029S)	7L129 (Bauer 918S Tap - Vermilion 710S)	139.0	142.8	144.6	104.0	135.8	97.7
	7L129 (Buffalo Creek 526S - Bauer 918S Tap)	139.0	142.8	153.0	110.1	135.4	97.4
	912L\9L912 (Red Deer 63S - Nevis 766S)	498.0	498.0	504.5	101.3	490.5	98.5

5.4. Constraint Effective Factors

Constraint effective factor studies were performed for the 2019 SL, 2019 SP and 2019 WP post-Project scenarios using Alternative 2. The constraint effective factors were calculated for all Category B conditions when the thermal loadings of the monitored transmission elements in the Study Area exceeded 100% (i.e., for all of the contingencies for which thermal criteria violations were observed). The results of the constraint effective factor studies are provided in Attachment A7.

AESO Engineering Connection Assessment Scope

Paintearth Wind Project Limited Partnership
Paintearth Wind Project Connection

AESO Project Number: 1704

Company Name	Engineer Name P.Eng.	Date	Engineer Signature
Teshmont Consultants LP	Ashraf Ul Haque PhD, P.Eng.	December 13, 2017	
AESO (Project Studies Engineer)	for Jahnavi Gopi Krishnan, E.I.T	Dec. 15, 2017	
	Peter Macleod, P.Eng	December 15, 2017	Peter Macleod
	Maz Mazadi, PhD, P.Eng.	Dec 15, 2017	Mazadi

Company Name	Name	Date	Signature
Paintearth Wind Project LP	Jeff Jenner	Dec 13 2017	

Document Release V1

13 December 2017

Contents

1. Introduction 4
1.1. Project 4
1.1.1. Project Overview 4
1.1.2. Load Component 4
1.1.3. Generation Component 4
1.2. Study Scope 5
1.2.1. Study Objectives 5
1.2.2. Study Area 5
1.2.3. Engineering Studies Required 8
2. Connection Alternative to be Studied 9
3. Criteria, System Data, and Study Assumptions 11
3.1. Criteria, Standards, and Requirements 11
3.1.1. Transmission Planning Standards and Reliability Criteria 11
3.1.2. ISO Rules and IDs 12
3.1.3. Wind Aggregated Generation Facility Requirements 12
3.2. Study Scenarios 12
3.3. Load and Generation Assumptions 13
3.3.1. Load Assumptions 13
3.3.2. Generation Assumptions 13
3.3.3. Intertie Flow Assumptions 16
3.3.4. HVDC Power Order 16
3.4. System Projects 17
3.5. Connection Projects 17
3.6. Facility Ratings and Shunt Elements 18
3.7. Protection Fault Clearing Times 21
3.8. Voltage Profile Assumption 22
4. Study Methodology 23
4.1. Engineering Studies to be Performed 23
4.2. Power Flow Studies 23
4.2.1. Contingencies Studied 24
4.3. Transient Stability Studies 24
4.3.1. Contingencies Studied 24
4.4. Short-circuit Studies 25
5. Mitigation Measures 26
5.1. Development 26
5.2. Evaluation 27
5.2.1. Post-Mitigation Studies 27
5.2.2. Constraint Effective Factor Studies 27

Attachments

Attachment A1.1 Transmission Planning Criteria – Basis and Assumptions

Tables

Table 3-1: Post Contingency Voltage Deviation Guidelines for Low Voltage Busses....12
Table 3-2: List of the Connection Study Scenarios....13
Table 3-3: Forecast Area Load (2016 LTO at Central Region Peak)....13
Table 3-4: Non-Renewable Generation in the Study Area....14
Table 3-5: Pre-Project Scenario Dispatch Levels for Existing Renewable Generation....14
Table 3-6: Pre-Project Scenario Dispatch Levels for Planned Renewable Generation in the Study Area....15
Table 3-7: Intertie Flow Assumptions....16
Table 3-8: HVDC Power Order by Scenario....16
Table 3-9: Connection Project Assumptions....17
Table 3-10: Thermal Rating Assumptions for Transmission Lines in the Study Area....18
Table 3-11: Summary of Key Transformer Ratings in the Study Area....20
Table 3-12: Summary of Key Shunt Elements in the Study Area....20
Table 3-13: Contingencies to be Studied for Transient Stability Assessment and the Respective Protection Fault Clearing Times....21
Table 4-1: Summary of Engineering Studies to be Performed....23

Figures

Figure 1-1: Existing Study Area Transmission System....7
Figure 2-1: Connection Alternative 2....10

1. Introduction

This Engineering Connection Assessment Scope provides an overview of the engineering studies to be completed by Teshmont Consultants LP, (the Studies Consultant) to assess the impact of the Project (as defined in Section 1.1) on the performance of the Alberta interconnected electric system (AIES). Technical criteria, assumptions and methods for performing these engineering studies are provided in this document.

1.1. Project

1.1.1. Project Overview

Paintearth Wind Project LP (Market Participant) has submitted a request for system access service to the Alberta Electric System Operator (AESO) to connect its proposed Paintearth Wind Project (Facility) to the AIES. The Facility will be located in the AESO planning area of Hanna (Area 42). The Facility is a wind aggregated generating facility, and includes a proposed collector station, to be designated the Lanes Lake 973S substation.

The Market Participant's request includes: a request for a Rate STS, *Supply Transmission Service*, contract capacity of 150 MW; a request for a Rate DTS, *Demand Transmission Service*, contract capacity of 1.0 MW for new system access service in the area; and a request for transmission development (collectively, the Project).

The scheduled in-service date (ISD) for the Project is July 1, 2019.

1.1.2. Load Component

The Project includes a load component:

- Requested Rate DTS contract capacity: 1 MW
- Load type: substation service and auxiliary load.

1.1.3. Generation Component

The Project includes the following generation component:

- Requested Rate STS contract capacity: 150 MW

- Facility maximum authorized real power (MARP): 150 MW
- Facility maximum capability (MC): 150 MW
- Generator type: Wind
- Turbine size and type: 3.6M/CCO/60Hz
- It is assumed that the aggregated generating facility has the minimum continuous reactive power capability of either supplying reactive power at 0.9 power factor (PF) lagging or absorbing reactive power at 0.95 PF leading, per the technical requirements of Section 502.1 of the ISO rules, *Wind Aggregated Generating Facilities Technical Requirements*
- The Market Participant advised that there is no future expansion planned.

1.2. Study Scope

1.2.1. Study Objectives

The objectives of the studies are as follows:

- Study the impact of the Project on the performance of the AIES.
- Identify any violations of the relevant criteria, standards, or requirements of the AESO, both pre-Project and post-Project.
- Recommend mitigation measures, if required, to enable the reliable connection of the Project to the AIES.

1.2.2. Study Area

1.2.2.1. Study Area Description

Geographically, the Project is located in the AESO planning area of Hanna (Area 42), which is part of the AESO Central Planning Region.

The Study Area for the Project consists of the AESO Planning areas of Hanna (Area 42), Alliance/Battle River (Area 36), Vegreville (Area 56), Wainwright (Area 32), Lloydminster (Area 13), Provost (Area 37) and Sheerness (Area 43), including the tie lines connecting these planning areas to the rest of the AIES. All transmission facilities within the Study Area will be studied and monitored for violations of the Reliability Criteria (defined in Section 3.1).

Figure 1-1 shows the existing transmission system configuration in the Study Area. The Study Area is served by 240 kV, 138/144 kV, and 69/72 kV transmission systems. Generation in the

Study Area includes coal generation facilities in Alliance/Battle River (Area 36) and Sheerness (Area 43), and wind generating facilities in Hanna (Area 42) and Provost (Area 37).

Figure 1-1: Existing Study Area Transmission System

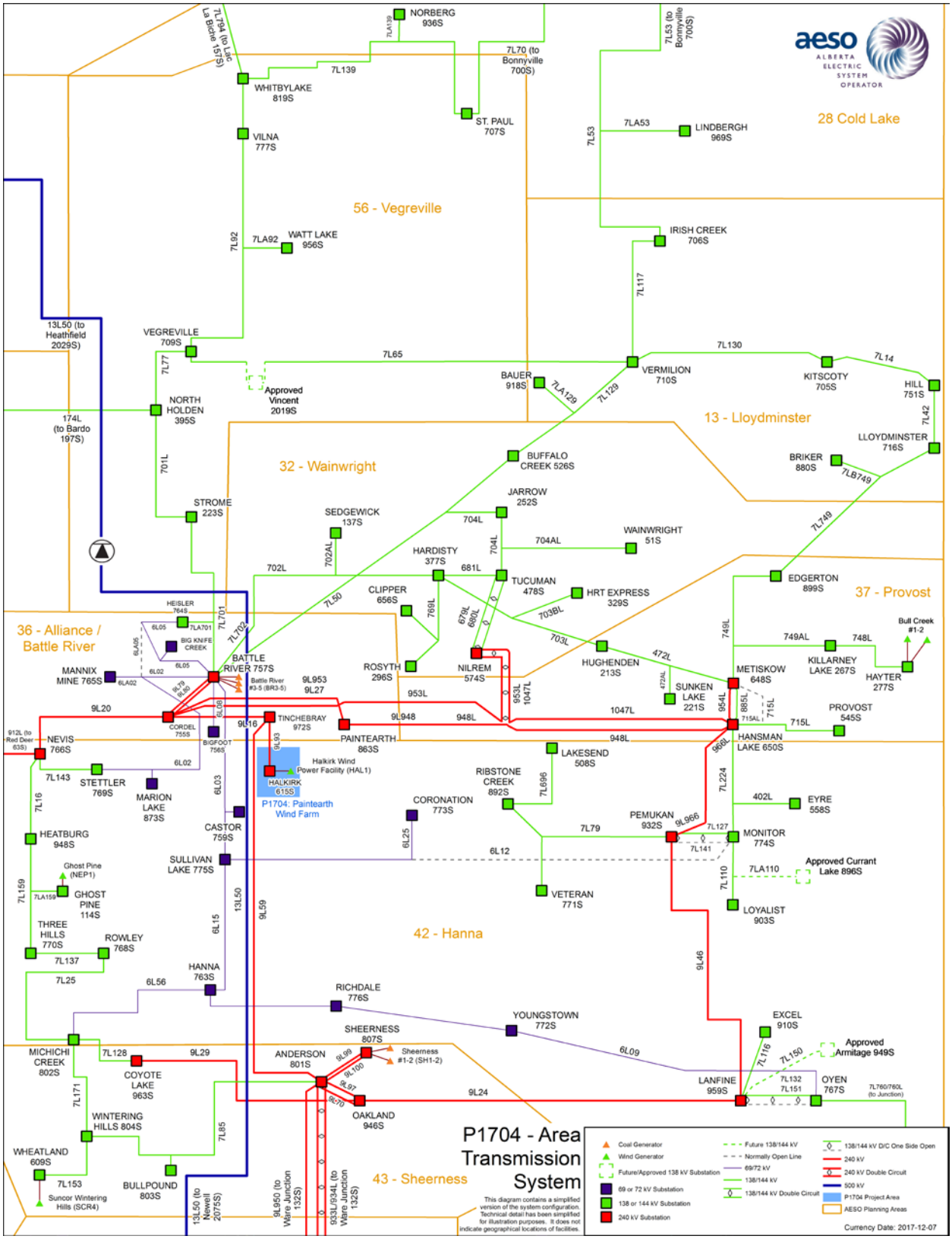

1.2.2.2. Existing Constraints

Existing constraints in the Study Area are managed in accordance with the procedures set out in Section 302.1 of the ISO Rules, *Real Time Transmission Constraint Management* (TCM Rule). There are a number of existing constraints in the Study Area that are mitigated by remedial action schemes (RASs).

The following mitigations are used to manage constraints in the area:

1. RAS 32: Battle River 757s 7L50 and 7L701 thermal protection scheme
2. RAS 134: 174L-395S North Holden overload mitigation scheme
3. RAS 138: 7L50 -526S Buffalo Creek overload mitigation scheme
4. RAS 139: 901T-766S Nevis overload mitigation scheme
5. RAS 149: Eastern Alberta Transmission Line (EATL) HVDC

1.2.3. Engineering Studies Required

The following engineering studies are required for the pre-Project scenarios:

- Power flow studies
- Short-circuit studies

The following engineering studies are required for the post-Project scenarios:

- Power flow studies
- Transient stability studies
- Short-circuit studies

2. Connection Alternative to be Studied

The following alternative will be studied.

Alternative 2 – In-and-out connection to the 240 kV transmission line 9L93

This alternative includes the following developments:

- Add a new 240 kV switching station, to be designated as Pioneer 805S substation, with two 240 kV circuit breakers.
- Add two 240 kV circuits to connect the proposed Pioneer 805S substation to the existing 240 kV transmission line 9L93 (between the Halkirk 615S and the Tinchebray 972S substations) using an in-and-out configuration.

Add a 240 kV transmission line, approximately 12 km[1] in length, to connect the proposed Pioneer 805S substation and the Facility.The proposed alternative 2 connection configuration is shown in Figure 2-1.

[1] The actual line length to be determined by the TFO.

Figure 2-1: Connection Alternative 2

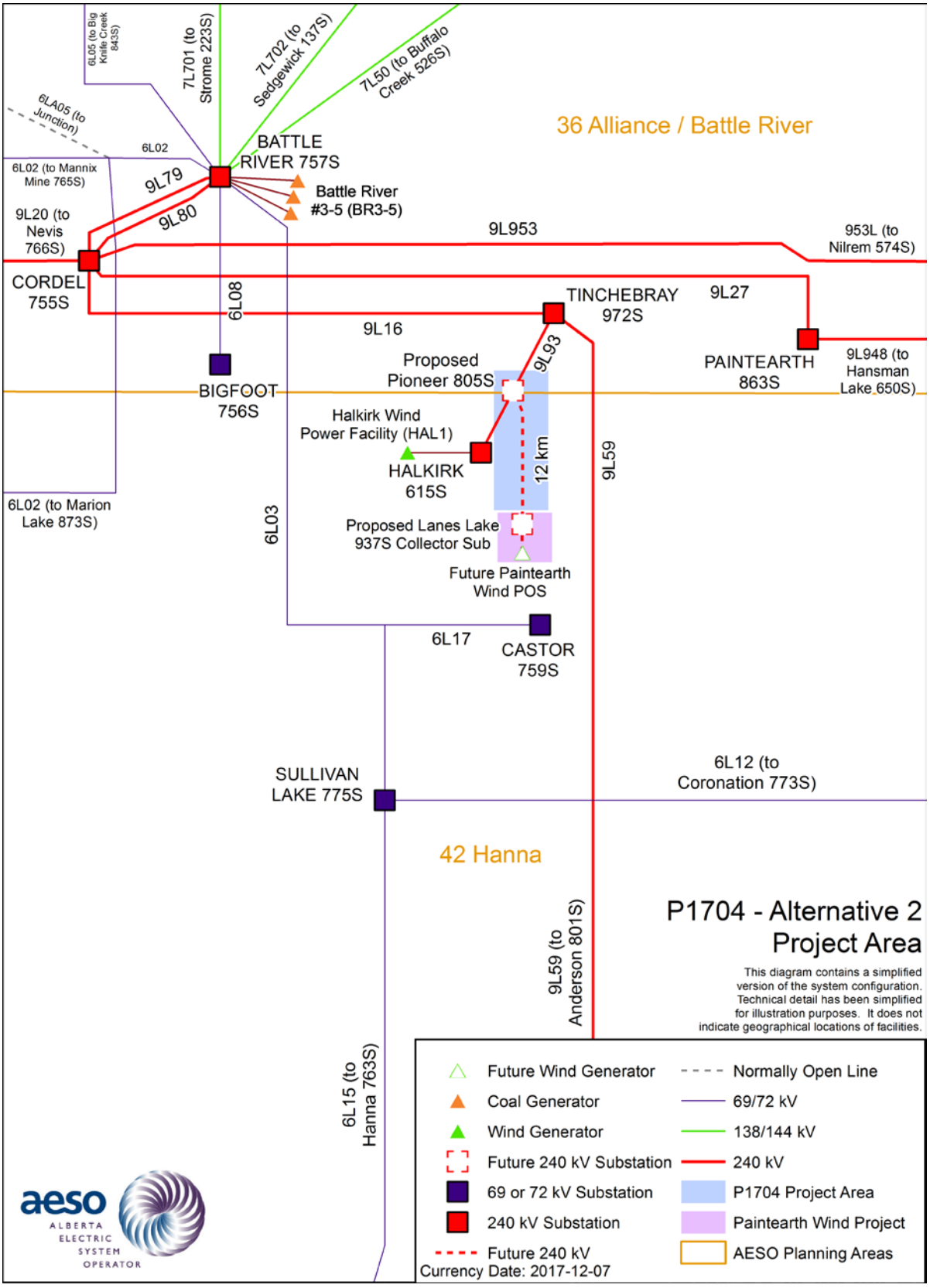

3. Criteria, System Data, and Study Assumptions

3.1. Criteria, Standards, and Requirements

3.1.1. Transmission Planning Standards and Reliability Criteria

The Transmission Planning (TPL) Standards, which are included in the Alberta Reliability Standards, and the AESO's *Transmission Planning Criteria – Basis and Assumptions* [2] (collectively, the Reliability Criteria) will be applied to evaluate system performance under Category A system conditions (i.e., all elements in-service) and following Category B (i.e., single element outage), prior to and following the studied alternatives. Below is a summary of Category A and Category B system conditions.

Category A, often referred to as the N-0 condition, represents a normal system with no contingencies and all facilities in service. Under this condition, the system must be able to supply all firm load and firm transfers to other areas. All equipment must operate within its applicable rating, voltages must be within their applicable range, and the system must be stable with no cascading outages.

Category B events, often referred to as an N-1 or N-G-1 with the most critical generator out of service, result in the loss of any single specified system element under specified fault conditions with normal clearing. These elements are a generator, a transmission circuit, a transformer, or a single pole of a DC transmission line. The acceptable impact on the system is the same as Category A. Planned or controlled interruptions of electric supply to radial customers or some local network customers, connected to or supplied by the faulted element or by the affected area, may occur in certain areas without impacting the overall reliability of the interconnected transmission systems. To prepare for the next contingency, system adjustments are permitted, including curtailments of contracted firm (non-recallable reserved) transmission service electric power transfers.

The TPL standards, TPL-001-AB-0 and TPL-002-AB-0, have referenced Applicable Ratings when specifying the required system performance under Category A and Category B events. For the purpose of applying the TPL standards to the studies documented in this report, Applicable Ratings are defined as follows:

- Seasonal continuous thermal rating of the line's loading limits.
- Highest specified loading limits for transformers.

[2] Please refer to Attachment A

- For Category A conditions: Voltage range under normal operating condition should follow the AESO Information Document ID #2010-007RS *General Operating Practices – Voltage Control* (ID #2010-007RS). For the busses not listed in ID#2010-007RS, Table 2-1 in the *Transmission Planning Criteria – Basis and Assumptions* applies.

- For Category B conditions: The extreme voltage range values per Table 2-1 in the *Transmission Planning Criteria – Basis and Assumptions*.

- Desired post-contingency voltage deviation limits for three defined post event timeframes as provided in Table 3-1.

Table 3-1: Post Contingency Voltage Deviation Guidelines for Low Voltage Busses

Parameter and reference point	Time Period		
	Post Transient (up to 30 sec)	Post Auto Control (30 sec to 5 min)	Post Manual Control (Steady State)
Voltage deviation from steady state at POD low voltage bus.	±10%	±7%	±5%

3.1.2. ISO Rules and IDs

ID #2010-007RS will be applied to establish system normal (i.e., pre- contingency) voltage profiles in the Study Area.

The TCM Rule will be followed to set up the study scenarios and assess the impact of the Project. In addition, due regard will be given to the AESO's *Connection Study Requirements* and the AESO's *Generation and Load Interconnection Standard*.

3.1.3. Wind Aggregated Generation Facility Requirements

The Facility should meet the technical requirements of ISO Rules Section 502.1, *Wind Aggregated Generation Facilities Technical Requirements*.

3.2. Study Scenarios

The scheduled ISD for the Project is July 1, 2019. Therefore, the studies will be performed using the 2019 summer light (SL), summer peak (SP), and winter peak (WP) scenarios. The short-circuit studies will also be performed using the 2026 WP scenario.

Table 3-2 provides a list of the study scenarios. The post-Project scenarios reflect the requested Rate STS contract capacity of 150 MW.

Table 3-2: List of the Connection Study Scenarios

Scenario	Year/Season Load	Condition	Project Generation (MW)	System Generation Dispatch Conditions
1	2019 SL	Pre-project	0	High Wind, Economic Coal
2	2019 SP	Pre-Project	0	High Wind, Economic Coal
3	2019 WP	Pre-project	0	High Wind, Economic Coal[a]
4	2019 SL	Post-Project	150	High Wind, Economic Coal
5	2019 SP	Post Project	150	High Wind, Economic Coal
6	2019 WP	Post-Project	150	High Wind, Economic Coal[a]
7	2026 WP	Post-Project	150	All generation in the Study Area on

[a] For short-circuit studies, all generation in the Study Area is assumed on.

3.3. Load and Generation Assumptions

3.3.1. Load Assumptions

The AESO Planning Region load forecasts to be used for this connection study are shown in Table 3-3 and are based on the *AESO 2016 Long-term Outlook* (2016 LTO). For the studies, when loads are modified to align with the load forecast in the 2016 LTO, the active power to reactive power ratio in the base case scenarios will be maintained.

Table 3-3: Forecast Area Load (2016 LTO at Central Region Peak)

Region Name and Season		Forecast Peak Load (MW)
		2019
Central Region*	SP	2031
	SL	1513
	WP	2313

Note: *The Central Region comprises the following AESO planning areas: 56,13,32,37,36,42,35,39,38,30,29,34, and 28.

3.3.2. Generation Assumptions

The generation forecast to be used for the studies is based on the 2016 LTO. The generation assumptions for the studies will assume high wind and economic coal dispatch conditions.

The non-renewable generating units in the Study Area and their dispatch levels for the studies are shown in Table 3-4.

Table 3-4: Non-Renewable Generation in the Study Area

Existing/ Future	Unit Name	Pmax (MW)	AESO Planning Area	Unit Net Generation (MW)*		
				2019 SP	2019 SL	2019 WP
Existing	Battle River #3	149	36	50	50	50
Existing	Battle River #4	155	36	50	152	139
Existing	Battle River #5	385	36	142	160	381
Existing	Sheerness #1	400	43	330	156	253
Existing	Sheerness #2	390	43	387	138	251

Note: *Unit Net Generation refers to Gross Generating unit MW output less Unit Service Load.

To remain consistent with the 2016 LTO's 2019 renewable generation forecast of 1973 MW, the existing and planned renewable generation facilities will be dispatched in order to yield the credible worst-case power flow conditions for the Study Area. Two different renewable generation dispatch cases, Case A (without the planned Irma Wind Power Project [3]) and Case B (with the planned Irma Wind Power Project) will be studied for each scenario (see Table 3-6). Two different renewable generation dispatch cases will be studied as it is expected that different mitigation measures will be required, depending on whether or not the planned Irma Wind Power Project is connected prior to the connection of the Project.

The pre-Project dispatch levels for the existing renewable generation facilities are shown in Table 3-5.

Table 3-5: Pre-Project Scenario Dispatch Levels for Existing Renewable Generation

Renewable Generating Facility Name	AESO Planning Area	Busses	MC (MW)	2019 SP/SL/WP Unit Net Generation (MW)	
				Case A	Case B
Ardenville Wind	53	4735, 4740	68	68	68
Blue Trail Wind	53	66328, 67328	66	66	66
Castle River #1	53	2234, 3234	39	0	0
Castle Rock Ridge Wind Farm	53	67221	77	77	53.5
Cowley Ridge	53	4264	20	20	20
Enmax Taber	52	15343, 16343	81	81	81
Kettles Hill	53	2402, 3402	63	63	63
McBride Lake Wind farm	53	2901, 3901, 4901	73	66.5	0
Soderglen Wind	53	12358, 13358	71	68	68
Summerview 1	53	2338, 3338	66	66	66
Summerview 2	53	4339, 5337	66	66	66
Suncor Chin Chute	54	2389	30	30	30

[3] The *Irma Wind Power Project Connection Needs Identification Document* (NID) was filed with the AUC on August 3, 2017 in Proceeding 22857.

Suncor Magrath	53	11002	30	30	30
Suncor Wintering Hills	43	60789, 60791, 60793, 60846, 60848, 60850	88	88	88
Black Spring Ridge	49	61736, 61737	300	300	300
Oldman River	53	61543	46	46	46
AESO South Planning Region Subtotal			**1183**	**1135.5**	**1045.5**
Ghost Pine	42	2621 to 2625	82	82	82
Halkirk	42	66435, 67435	150	150	150
Bull Creek DG	37	4222	29.5	29.5	29.5
AESO Central Planning Region Subtotal			**261.5**	**261.5**	**261.5**
Total Existing Renewable Generation			**1444.5**	**1397**	**1307**

For study purposes, planned renewable generation facilities will be dispatched according to the AESO Connection Queue. Table 3-6 depicts the pre-Project dispatch levels for the planned renewable generation projects in the AESO South and Central planning regions that are ahead of the Project in the AESO Connection Process, as of December 7, 2017. The planned renewable generation projects, if any, that have queue positions after the Project are not listed in this table and will not be dispatched.

Table 3-6: Pre-Project Scenario Dispatch Levels for Planned Renewable Generation in the Study Area

AESO Project Name	AESO Project Number	AESO Planning Area No.	Pmax (MW)	2019 SP/SL/WP Unit Net Generation (MW)	
				Case A	Case B
Irma Wind Power Project[a]	937	32	90	0	90
E.ON Grizzly Bear Wind[b]	1250	13	120	0	0
Suncor Hand Hills Wind Energy Project[c]	635	42	80	80	80
BluEarth Hand Hills Wind Energy Project[d]	678	42	80	80	80
Joss MPC WAGF[e]	1533	48	120	120	120
Sharp Hills Wind Farm[f]	1567	42	300	300	300
Total Planned Renewable Generation				**580**	**670**

[a]The *Irma Wind Power Project Connection* NID, as filed with the AUC on August 3, 2017 in Proceeding 22857.
[b]The *Grizzly Bear Creek Wind Power Connection* NID, as originally approved by AUC Decision 21643-D01-2016 and Approval 21643-D02-2016.
[c]The *Suncor Hand Hills Wind Energy Connection* NID, as originally approved by AUC Decision 2482-D01-2015 and Approval 2482-D03-2015.
[d]The *BluEarth Hand Hills Wind Energy Connection* NID, as originally approved by AUC Decision 2482-D01-2015 and Approval 2482-D02-2015.
[e]The *Jenner Wind Energy Connection* NID, as originally approved by AUC Decision 21394-D01-2017 and Approval 21934-D02-2017.
[f] The *Sharp Hills Wind Farm Connection* NID, as filed with the AUC on October 27, 2017 in Proceeding 23066.

The post-Project scenario renewable generation dispatch levels were identical to the pre-Project scenario dispatch levels shown in Tables 3-5 and 3-6, except that the existing Ardenville, Blue Trail and Cowley Ridge facilities were switched off (i.e., dispatched to 0 MW/MVar) due to being

far outside the Study Area, and the Facility was dispatched to 150 MW in all post-Project scenarios. This will result in a total renewable dispatch consistent with the 2016 LTO's 2019 renewable generation forecast of 1973 MW.

3.3.3. Intertie Flow Assumptions

Intertie assumptions for the British Columbia-Alberta (BC-AB), Saskatchewan-Alberta (SK-AB), and Montana-Alberta (MATL) interties can be found in Table 3-7 for Scenarios 1 through 6. These export and import assumptions coincide with high export and high import conditions for the Study Area. For Scenario 7, the intertie flows should be as per the published AESO base cases.

Table 3-7: Intertie Flow Assumptions

Scenario Number	Scenario Name	Intertie Flow Conditions	Intertie		
			Import (-) /Export (+) to BC BC-AB (MW)	Import (-) /Export (+) to Saskatchewan SK-AB (MW)	Import (-) /Export (+) to MATL MATL (MW)
1	2019 SL Pre-Project	High Export	700	150	300
2	2019 SP Pre-Project	High Import	-800	-150	-300
3	2019 WP Pre-Project	High Import	-800	-150	-300
4	2019 SL Post-Project	High Export	700	150	300
5	2019 SP Post-Project	High Import	-800	-150	-300
6	2019 WP Post-Project	High Import	-800	-150	-300

3.3.4. HVDC Power Order

The Western Alberta Transmission Line (WATL) and the Eastern Alberta Transmission Line (EATL) are high-voltage direct current (HVDC) transmission lines. The HVDC power order assumptions for Scenarios 1 through 6 will be set to minimize losses for the pre-Project and post-Project study scenarios, as shown in Table 3-8. For Scenario 7, the HVDC power order should be as per the published AESO base cases.

Table 3-8: HVDC Power Order by Scenario

Scenario Number	Scenario	WATL (MW)	EATL (MW)
1	2019 SL Pre-Project Case A	500 N → S	200 S → N
	2019 SL Pre-Project Case B	450 N → S	Blocked
2	2019 SP Pre-Project Case A	Blocked	750 S → N
	2019 SP Pre-Project Case B	Blocked	750 S → N
3	2019 WP Pre-Project Case A	Blocked	650 S → N

Scenario Number	Scenario	WATL (MW)	EATL (MW)
	2019 WP Pre-Project Case B	Blocked	650 S → N
4	2019 SL Post-Project Case A	500 N → S	200 S → N
	2019 SL Post-Project Case B	450 N → S	Blocked
5	2019 SP Post-Project Case A	Blocked	750 S → N
	2019 SP Post-Project Case B	Blocked	750 S → N
6	2019 WP Post-Project Case A	Blocked	650 S → N
	2019 WP Post-Project Case A	Blocked	650 S → N

Notes: *N → S: HVDC flow direction is North to South*

S → N: HVDC flow direction is South to North

3.4. System Projects

No planned AESO system transmission project will be considered in the system topology for the study scenarios because planned transmission developments are not expected to be in service before the scheduled Project ISD.

3.5. Connection Projects

Connection projects within the Study Area that are ahead of the Project in the AESO Connection Queue as of December 2017 will be modelled in the study scenarios unless otherwise indicated. Table 3-9 summarizes the connection project assumptions that will be used in the studies. Information in this table is subject to change as projects progress.

Table 3-9: Connection Project Assumptions

AESO Planning Area	Queue Position*	Scheduled In-Service Date	AESO Project Name	AESO Project Number	Gen (MW)	Load (MW)	Included/Excluded from Studies
42	6	01-Sep-19	Suncor Hand Hills Wind Energy Project	635	80	0.1	Included, see Table 3-6
42	7	01-Sep-19	BluEarth Hand Hills Wind Project	678	78.2	0	Included, see Table 3-6
32	15	01-Jul-19	Irma Wind Power	937	90	3	Included, see Table 3-6
13	21	01-Sep-19	E.ON Grizzly Bear Wind	1250	120	1.5	Included, see Table 3-6
56	26	13-Dec-19	ATCO Heartland Pump Station Connection	1410	0	20	Included
37	36	03-Dec-18	Enbridge Sunken Lake 221S Transformer Change	1516	0	14	Included
48	39	03-Dec-18	Joss MPC WAGF	1533	120	0	Included, see Table 3-6
32	41	01-Dec-18	Enbridge New Hardisty Substation	1558	0	0	Included

AESO Planning Area	Queue Position*	Scheduled In-Service Date	AESO Project Name	AESO Project Number	Gen (MW)	Load (MW)	Included/Excluded from Studies
32	44	01-Mar-18	Fortis Wainwright Enhanced Reliability	1594	0	0	Included
42	46	01-May-19	EDPR Sharp Hills Wind Farm New Facility Generator Capacity	1567	300.0	0	Included, see Table 3-6
36	57	01-Jun-18	Fortis Genalta Bellshill DG	1794	0.0	0.0	Included

* Per the AESO Connection Queue posted in December 2017. The projects in the Study Area, if any, that have queue positions after the Project are not listed in this table and will not be modeled in the study scenarios

3.6. Facility Ratings and Shunt Elements

The legal owners of transmission facilities (TFOs) provided the thermal ratings assumptions for the existing transmission lines in the Study Area. Table 3-10 shows the seasonal continuous ratings and short-term (emergency) ratings for the key transmission lines in the Study Area, which will be used to perform the engineering studies.

Table 3-10: Thermal Rating Assumptions for Transmission Lines in the Study Area

Line ID	Line Description	Voltage Class (kV)	Seasonal Continuous Rating (MVA)		Short-term (Emergency) Rating (MVA)	
			Summer	Winter	Summer	Winter
174L	Bardo 197S – North Holden 395S	138	85	90	94	99
408L[a]	Jarrow 252S - Wainwright 51S	138	75	79	83	87
704L	Wainwright 51S – Tucuman 478S	138	75	79	83	87
704L	Jarrow 252S - Jarrow 252S tap point	138	85	90	94	99
7L129	Buffalo Creek 526S - Bauer 918S tap point	138	109.3	139	123.6	142.8 CT
7L129	Vermilion 710S - Bauer 918S tap point	138	109.3	139	123.6	142.8 CT
7L50	Buffalo Creek 526S - Jarrow 252S tap point	138	109.3	139	123.6	150.5
7L50	Battle River 757S – Jarrow 252S tap point	138	109.3	139	123.6	150.5
7L701/701L	Strome 223S - Battle River 757S	138	139.9	169	160	169
7L702/702L	Sedgewick 137S - Battle River 757S	138	109.3	118	123.6	130
748L	Killarney Lake 267S - Hayter 277S	138	119	146	131	161
749L	Metiskow 648S - Killarney Lake 267S substation tap point	138	122	150	134	165
749AL	Killarney Lake 267S - Killarney Lake 267S tap point	138	121	148	133	163
749L	Edgerton 899S - Killarney Lake 267S tap point	138	96	96.0	134	143
749L/7L749	Edgerton 899S - Briker 880S tap point	138	96	96.0	130	140
7L749	Lloydminster - Briker 880S tap point	138	109.3	139	123.6	150.5
7L159	Ghost Pine 114S tap point - Three Hills 770S	138	109.3	126.5	123.6	126.5

7L159	Ghost Pine 114S tap point - Heatburg 948S	138	109.3	126.5	123.6	126.5
7L16	Nevis 766S - Heatburg 948S	138	109.3	126.5	123.6	126.5
7L85	Wintering Hills 804S - Bullpound 803S	138	109.3	139	123.6	150.5
7L85	Bullpound 803S – Anderson 801S	138	109.3	126.5	123.6	126.5
7L25	Michichi Creek 802S - Rowley 768S	138	94.9 CT	94.9 CT	94.9 CT	94.9 CT
7L128	Michichi Creek 802S - Coyote Lake 963S	138	180.1	217.5	180.1	217.5
7L65	Vincent 2019S tap point - Vegreville 709S	138	94.9 CT	94.9 CT	94.9 CT	94.9 CT
7L53	Irish Creek 706S - Bonnyville 700S	138	71.9	86.3	71.9	86.3
7L117	Vermilion 710S - Irish Creek 706S	138	123.6	150.4	123.6	150.5
7L130	Kitscoty 705S - Vermilion 710S	138	71.9	86.3	71.9	86.3
7L14	Hill 751S - Kitscoty 705S	138	71.9	86.3	71.9	86.3
7L42	Lloydminster 716S – Hill 751S	138	99 CT	99 CT	99 CT	99 CT
7L127	Pemukan 932S - Monitor 774S	138	126.5	126.5	126.5	126.5
7L224	Hansman Lake 650S – Monitor 774S	138	109.3	139	123.6	142
9L912/912L	Red Deer 63S - Nevis 766S	240	488 CT[b]	498.0 CT	488 CT	498.0 CT
9L20	Nevis 766S - Cordel 755S	240	488	498.0 CT	498.0 CT	498.0 CT
9L29	Oakland 946S - Coyote Lake 963S	240	332 CT	332 CT	432 CT	432 CT
9L27	Cordel 755S - Paintearth 863S	240	332 CT	332 CT	332 CT	332 CT
953L/9L953	Cordel 755S - Nilrem 574S	240	498 CT	498 CT	498 CT	498 CT
9L950	Anderson 801S - Ware Junction 132S	240	519	663	592	716
934L/9L934	Anderson 801S - Ware Junction 132S	240	519	663	592	716
933L/9L933	Anderson 801S - Ware Junction 132S	240	519	663	592	716
931L	Ware Junction 132S - West Brooks 28S	240	592	665	654	773
944L	Ware Junction 132S - Jenner 275S	240	550	679	660	815
951L	Ware Junction 132S - Jenner 275S	240	550	679	654	773
9L24	Oakland 946S - Lanfine 959S	240	332 CT	332 CT	432 CT	432 CT
9L51[c]	Sedalia 363S – Pemukan 932S	240	332 CT	432 CT	332 CT	432 CT
9L59	Anderson 801S - Tinchebray 972S	240	549	701	627	759
9L175	Pioneer 801S – Tinchebray 972S	240	433	524	433	524
9L93[c]	Halkirk 615S – Pioneer 805S	240	249 CT	249 CT	249 CT	249 CT

Notes:
"CT" indicates that the transmission line is limited by current transformer.
[a] The segment of 704L from Wainwright 51S to Jarrow 252S was re-numbered to 408L as part of the *Wainwright Transmission Reinforcement* NID, and as originally approved by AUC Decision 21857-D01-2017 and Approval 21857-D02-2017
[b] 912L/9L912 summer seasonal continuous rating was recently increased after the completion of a TFO capital maintenance project in December 2017.
[c] 9L46 currently connects Pemukan 932S and Lanfine 959S, but is proposed to be split into two segments: 9L46 (between the proposed Sedalia 363S substation and the existing Lanfine 959S substation) and 9L51 (between the proposed Sedalia 363S substation and the existing Pemukan 959S substation) in the *Sharp Hills Wind Farm Connection* NID
[d] Pre-Project, 9L93 is from Halkirk 615S to Tinchebray 972S with a seasonal continuous rating of 249 MVA for both summer and winter, and a short-term (emergency) rating of 249 MVA for both summer and winter.

The TFOs provided the details of the substation transformers in the Study Area. The key transformers in the Study Area are shown in Table 3-11.

Table 3-11: Summary of Key Transformer Ratings in the Study Area

Substation Name and Number	Transformer ID	Transformer Voltages (kV)	Transformer Rating (MVA)
Pemukan 932S	901T	240/144/25	300/300/66.7
Coyote Lake 963S	901T	240/144/25	300/300/66.7
Lanfine 959S	901T	240/144/25	300/300/66.7
Anderson 801S	901T	240/144	125
Battle River 757S	912T	240/144	224
	701T	144/72	75
Nevis 766S	901T	240/144	100
	701T	144/72/25	12/16/20
Nilrem 574S	T1	240/138	400
	T2	240/138	400
Metiskow 648S	T1	138/25	25
	T3	240/138	200
Hansman Lake 650S	T1	240/138	200
	T3	240/18	200

The TFOs provided the details of the shunt elements in the Study Area. The key shunt elements in the Study Area are shown in Table 3-12.

Table 3-12: Summary of Key Shunt Elements in the Study Area

Substation Name and Number	Voltage Class (kV)	Capacitors		Reactors	
		Number of Switched Shunt Blocks	Total at Nominal Voltage (MVAr)	Number of Switched Shunt Blocks	Total at Nominal Voltage (MVAr)
Buffalo Creek 526S	138	1 x 15.00 MVAr	15.00	-	-
Sunken Lake 221S	138	1 x 18.00 MVAr	18.00	-	-
Halkirk 615S	34.5	1 x 6.00 MVAr + 3 x 18.00 MVAr	60.00	2 x -14.00 MVAr	-14.00
	0.5	2 x 12.50 MVAr	25.00	2 x -12.50 MVAr	-25.00
Hansman Lake 650S	18.0	1 x 200.0 MVAr	200.0	1 x -100.0 MVAr	-100.0
Hardisty 377S	138	1 x 27.02 MVAr	27.02	-	-
Hill 751S	138	1 x 18.12 MVAr + 1 x 22.96 MVAr	41.08	-	-

Substation Name and Number	Voltage Class (kV)	Capacitors		Reactors	
		Number of Switched Shunt Blocks	Total at Nominal Voltage (MVAr)	Number of Switched Shunt Blocks	Total at Nominal Voltage (MVAr)
Stettler 769S	138	1 x 13.78 MVAr	13.78	-	-
Killarney Lake 267S	138	1 x 9.10 MVAr + 2 x 10.90 MVAr	30.90	-	-
Lloydminster 716S	138	1 x 18.12 MVAr	18.12	-	-
Tucuman 478S	138	1 x 27.17 MVAr	27.17	-	-
Vermilion 710S	138	1 x 22.96 MVAr	22.96	-	-
Lanfine 959S	34.5	1 x 200 MVAr	200	1 x -100 MVAr	-100
	138	2 x 27.55 MVAr	55.10	-	-
Monitor 774S	138	1 x 18.38 MVAr + 1 x 27.55 MVAr	45.93	-	-
Pemukan 932S	138	2 x 27.55 MVAr	55.10	-	-

3.7. Protection Fault Clearing Times

The transient stability studies will be performed for the contingencies shown in Table 3-13. The studies will be performed using the actual fault clearing times for the selected contingencies, which will be provided by the TFOs. If the TFOs do not specify the fault clearing times for one of the selected contingencies, then the studies for that contingency will be performed using the standard fault clearing times that are specified in Table 2-3 of the *Transmission Planning Criteria – Basis and Assumptions*. Transient stability studies should be performed using a bolted three phase to ground fault to be applied in the fault location shown below.

Table 3-13: Contingencies to be Studied for Transient Stability Assessment and the Respective Protection Fault Clearing Times

Contingency (System Element Lost)				Fault Location	Clearing Times	
Transmission Line ID	Nominal Bus Voltage (kV)	Terminal Location				
		Terminal 1	Terminal 2		Terminal 1	Terminal 2
9L24	240	Oakland 946S	Lanfine 959S	Oakland 946S	5 cycles	6 cycles
9L24	240	Lanfine 959S	Oakland 946S	Lanfine 959S	5 cycles	6 cycles
9L29	240	Oakland 946S	Coyote Lake 963S	Oakland 946S	5 cycles	6 cycles
9L29	240	Coyote Lake 963S	Oakland 946S	Coyote Lake 963S	5 cycles	6 cycles
9L20	240	Cordel 755S	Nevis 766S	Cordel 755S	5 cycles	6 cycles
9L20	240	Nevis 766S	Cordel 755S	Nevis 766S	5 cycles	6 cycles
9L16	240	Cordel 755S	Tinchebray 972S	Cordel 755S	5 cycles	6 cycles

9L16	240	Tinchebray 972S	Cordel 755S	Tinchebray 972S	5 cycles	6 cycles
966L/9L966	240	Pemukan 932S	Hansman Lake 650S	Pemukan 932S	5 cycles	6 cycles
966L/9L966	240	Hansman Lake 650S	Pemukan 932S	Hansman Lake 650S	5 cycles	6 cycles
912L/9L912	240	Red Deer 63S	Nevis 766S	Red Deer 63S	5 cycles	6 cycles
912L/9L912	240	Nevis 766S	Red Deer 63S	Nevis 766S	5.5 cycles	6.5 cycles
9L59	240	Tinchebray 972S	Anderson 801S	Tinchebray 972S	5 cycles	6 cycles
9L59	240	Anderson 801S	Tinchebray 972S	Anderson 801S	5 cycles	6 cycles

3.8. Voltage Profile Assumption

ID #2010-007RS will be used to establish normal system (i.e., pre-contingency) voltage profiles for key area busses prior to commencing any studies. Table 2-1 of the *Transmission Planning Criteria – Basis and Assumptions* applies for all the busses not included in the ID #2010-007RS. These voltages will be used to set the voltage profile for the study base cases prior to power flow studies.

4. Study Methodology

4.1. Engineering Studies to be Performed

The engineering studies to be performed for this connection assessment are identified in Table 4-1.

Table 4-1: Summary of Engineering Studies to be Performed

Scenario No. and Name		Renewable Generation Dispatch Case[a]	System Conditions	Power Flow	Transient Stability	Short-circuit
1	2019 SL Pre-Project	Case A	Category A and Category B	X		
		Case B	Category A and Category B	X		
2	2019 SP Pre-Project	Case A	Category A and Category B	X		
		Case B	Category A and Category B	X		
3	2019 WP Pre-Project	Case A	Category A and Category B	X		
		Case B	Category A and Category B	X		X[b]
4	2019 SL Post-Project	Case A	Category A and Category B	X	X	
		Case B	Category A and Category B	X	X	
5	2019 SP Post-Project	Case A	Category A and Category B	X	X	
		Case B	Category A and Category B	X	X	
6	2019 WP Post-Project	Case A	Category A and Category B	X	X	
		Case B	Category A and Category B	X	X	X[b]
7	2026 WP Post-Project	All generation in Study Area on Case B	Category A			X

Notes:

[a] As defined in Section 2.3.2.

[b] Only the Category A condition will be studied for short-circuit studies, with all generation in the Study Area online

4.2. Power Flow Studies

Power flow studies will be performed to identify thermal and voltage criteria violations as per the Reliability Criteria, and any deviations from the limits listed in Table 3-1.

For the Category B power flow studies, the transformer taps and switched shunt reactive compensating devices such as shunt capacitors and reactors will be locked and continuous shunt devices will be enabled.

Voltage deviations at point-of-delivery (POD) low voltage busses will also be assessed for both the pre-Project and post-Project scenarios by first locking all tap changers and area shunt reactive compensating devices to identify any post-transient voltage deviations above 10%. Second, tap changers will be allowed to move while shunt reactive compensating devices remained locked to determine if any voltage deviations above 7% would occur in the area. Third, all the taps and shunt reactive compensating devices will be allowed to adjust, and voltage deviations above 5% will be reported.

The scenarios and cases to be studied are as shown in Table 4-1.

4.2.1. Contingencies Studied

Power flow studies will be performed for all Category B contingencies in the Study Area.

4.3. Transient Stability Studies

Transient stability studies will be performed for the post-Project scenarios.

Keephills generating unit 3 in Wabamun (Area 40) will be used as the reference machine for the studies.

The report presenting the results of the transient stability studies must provide response plots for multiple variables including rotor angle, and active and reactive power output for the following:

- the two Sheerness generating units in Sheerness (Area 43); and
- the three Battle River generating units in Alliance/Battle River (Area 36).

The results report must also provide the 240 kV and 138 kV bus voltages for substations near the point of connection. Other busses will be monitored and will be reported as determined by the results. The results report must also provide the key branch active and reactive power flow surrounding the Facility.

The scenarios and cases to be studied are as shown in Table 4-1.

4.3.1. Contingencies Studied

Transient stability studies will be performed for the contingencies shown in Table 3-13.

4.4. Short-circuit Studies

Winter peak scenarios will be used for short-circuit analysis because winter peak scenarios produce higher short-circuit current levels than summer peak scenarios.

A maximum fault level must be provided for the substations in the vicinity of the Project assuming normal system operation with all transmission elements in service and generation dispatched. Three-phase faults and single line to ground fault will be simulated. Polar coordinates and per unit values will be used for reporting the results.

Estimated maximum three-phase faults and single line-to-ground short-circuit current levels will be reported for the following substations:

- Anderson 801S
- Sheerness 807S
- Oakland 946S
- Hansman Lake 650S
- Tinchebray 972S
- Cordel 755S
- Paintearth 863S
- Halkirk 615S
- Pioneer 805S
- Lanes Lake 973S

The scenarios and cases to be studied are as shown in Table 4-1.

5. Mitigation Measures

5.1. Development

Mitigation measures may be required if the post-Project study results identify system performance issues. Mitigation measures for the Project may involve real-time operational practices and/or modifying or adding remedial action schemes (RASs).

The Studies Consultant must notify the AESO of any system performance issues in a timely manner, following which the AESO Studies Engineer may instruct the Studies Consultant as follows:

- Develop tables showing the constraint effective factors[4] for generation or load based on thermal criteria violations that are observed. Collaborate with the AESO to propose changes, if any, to the connection alternatives that could remove the requirement for a RAS.

- Collaborate with the AESO to study modifications to existing and/or planned RASs, proposed by the AESO, to ensure the coordination of existing protection schemes with the addition of any proposed protection schemes.

- Collaborate with the AESO to identify and study new RASs, if any, that may be required to ensure system reliability is maintained post-Project.

The AESO Studies Engineer will work closely with the Studies Consultant and guide the development and/or modifications of the proposed mitigation measures to ensure system reliability, security and compliance with AESO system access business practices.

[4] Constraint effective factor studies are performed to determine the generator- and load- constraint effective factors. Constraint effective factors are used to estimate the ability of generators and loads to manage transmission constraints. A generator's or load's constraint effective factor is defined as the change in power flow over a specific transmission line following a change in the generator's energy production or in the load's energy consumption. The greater the constraint effective factor, the more effective a generator or load can be in managing a thermal criteria violation on the specific transmission line.

5.2. Evaluation

5.2.1. Post-Mitigation Studies

Studies to evaluate the effectiveness of mitigation measures, if required, will be performed in accordance with the technical criteria, assumptions, and methods provided in this AESO Engineering Connection Assessment Scope and in accordance with further instructions from the AESO.

5.2.2. Constraint Effective Factor Studies

Constraint effective factor studies are used to determine the generator- and load- constraint effective factors and to identify the most effective generators or loads to manage the thermal criteria violations, if any, that are observed.

Attachment A1.1

Transmission Planning Criteria- Basis and Assumptions (Reliability Criteria)

1. Introduction

This document presents the reliability standards, criteria, and assumptions to be used as the basis for planning the Alberta Transmission System. The criteria, standards and assumptions identified in this document supersede those previously established.

2. Transmission Reliability Standards and Criteria[1]

The AESO applies the following Alberta Reliability Standards to ensure that the transmission system is planned to meet applicable performance requirements under a defined set of system conditions and contingencies. A brief description of each of these standards is given below:

1. **TPL-001-AB-0: System Performance Under Normal Conditions**
   Category A represents a normal system condition with all elements in service (N-0). All equipment must be within its applicable rating, voltages must be within their applicable ratings and the system must be stable with no cascading outages. Under Category A, electric supply to load cannot be interrupted and generating units cannot be removed from service.

2. **TPL-002-AB-0: System Performance Following Loss of a Single BES Element**
   Category B events result in the loss of any single element (N-1) under specified fault conditions with normal clearing. The specified elements are a generating unit, a transmission circuit, a transformer or a single pole of a direct current transmission line. The acceptable impact on the system is the same as Category A with the exception that radial customers or some local network customers, including loads or generating units, are allowed to be disconnected from the system if they are connected through the faulted element. The loss of opportunity load or opportunity interchanges is allowed. No cascading can occur.

3. **TPL-003-AB-0: System Performance Following Loss of Two or More BES Elements**
   Category C events result in the loss of two or more bulk electric system elements (sequential, N-1-1 or concurrent, N-2) under specified fault conditions and include both normal and delayed fault clearing. All of the system limits for Category A and B events apply with the exception that planned and controlled loss of firm load, firm transfers and/or generation is acceptable provided there is no cascading.

4. **TPL-004-AB-0: System Performance Following Extreme BES Events**
   Category D represents a wide variety of extreme, rare and unpredictable events, which may result in the loss of load and generation in widespread areas. The system may not be able to reach a new stable steady state, which means a blackout is a possible outcome. The AESO needs to evaluate these events, at its discretion, for risks and consequences prior to creating mitigation plans.

5. **FAC-014-AB-2: Establishing and Communicating System Operating Limits**
   The AESO is required to establish system operating limits where a contingency is not mitigated through construction of transmission facilities.

[1] A complete description of these standards are given in: AESO. *Alberta Reliability Standards*. Available from http://www.aeso.ca/rulesprocedures/17004.html

2.1 Thermal Loading Criteria

The AESO Thermal Loading Criteria require that the continuous thermal rating of any transmission element is not exceeded under normal and post-contingency operating conditions. Thermal limits are assumed to be 100% of the respective normal summer and winter ratings. Emergency limits are not considered in the planning evaluations.

2.2 Voltage Range and Voltage Stability Criteria

The normal minimum and maximum voltage limits as specified in the following table are used to identify Category A system voltage violations, while the extreme minimum and maximum limits are used to identify Category B and C system violations. Table 2-1 presents the acceptable steady state and contingency state voltage ranges for the AIES. Table 2-2 provides voltage stability criteria used to test the system performance.

Table 2-1: Acceptable Range of Steady State Voltage (kV)

Nominal Voltage	Extreme Minimum	Normal Minimum	Normal Maximum	Extreme Maximum
500	475	500	525	550
240	216	234	252	264
260 (Northeast & Northwest)*	234	247	266	275
144	130	137	151	155
138	124	135	145	150
72	65	68.5	75.5	79
69	62	65.5	72.5	76

Table 2-2: Voltage Stability Criteria

Performance Level	Disturbance (1)(2)(3)(4) Initiated by: Fault or No fault DC Disturbance	MW Margin (P-V method) (5)(6)(7)	MVAr Margin (V-Q method) (6)(7)
A	Any element such as: One Generator One Circuit One Transformer One Reactive Power Source One DC Monopole	≥ 5%	Worst Case Scenario(8)
B	Bus Section	≥ 5%	50% of Margin Requirement

Performance Level	Disturbance (1)(2)(3)(4) Initiated by: Fault or No fault DC Disturbance	MW Margin (P-V method) (5)(6)(7)	MVAr Margin (V-Q method) (6)(7)
			in Level A
C	Any combination of two elements such as: A Line and a Generator A Line and a Reactive Power Source Two Generators Two Circuits Two Transformers Two Reactive Power Sources DC Bipole	≥ 2.5%	50% of Margin Requirement in Level A
D	Any combination of three or more elements. i.e.: Three or More Circuits on ROW Entire Substation Entire Plant Including Switchyard	> 0	> 0

2.3 Transient Stability Analysis Assumptions

Standard fault clearing times as shown in Table 2-3 are used for the new facilities or when the actual clearing times are not available for the existing facilities. Double line-to-ground faults are applied for the Category C5 events with normal clearing times. Single line-to-ground faults are applied for Category C6 to C9 events with delayed clearing times as depicted in Table 2-4 and Table 2-5.

Table 2-3: Fault Clearing Times

Nominal	Near End	Far End
kV	Cycles	Cycles
500	4	5
240	5	6
144/138	6	8

with telecommunications		
144/138 without telecommunications	6	30

Table 2-4: Stuck Breaker Clearing Times for Lines

Fault Clearing Time			Fault Clearing Time			Fault Clearing Time		
138/144 kV			240 kV			500 kV		
Near End	Far End	2nd Ckt (for C5 and C7 Only)	Near End	Far End	2nd Ckt (for C5 and C7 Only)	Near End	Far End	2nd Ckt (for C5 and C7 Only)
15	24	24	12	6	14	9	5	11

Table 2-5: Stuck Breaker Clearing Times for Transformers

Fault Clearing Time (Cycles)						Fault Clearing Time (Cycles)					
240/138 kV						500/240 kV					
Fault on 240 kV Side			Fault on 138 kV Side			Fault on 500 kV Side			Fault on 240 kV Side		
240 kV Side	138 kV Side	2nd Ckt (for Breaker Fail)	138 kV Side	240 kV Side	2nd Ckt (for Breaker Fail)	500 kV Side	240 kV Side	2nd Ckt (for Breaker Fail)	240 kV Side	500 kV Side	2nd Ckt (for Breaker Fail)
12	6	14	15	5	24	9	5	11	12	4	14

Attachment A2

Pre-Project Power Flow Diagrams

List of Figures

Scenario and Case Name	Contingency (System Element Lost)	Figure Number
2019 Summer Light Pre-Project Case A	N-0 (System Normal Condition)	Figure A2-1
	9L29 (Oakland 946S - Coyote Lake 963S)	Figure A2-2
	766S901T (Nevis 766S Transformer 901T)	Figure A2-3
	648ST1 (Metiskow 648S Transformer T1)	Figure A2-4
	9L20 (Nevis 766S - Cordel 755S)	Figure A2-5
	912L\9L912 (Red Deer 63S - Nevis 766S)	Figure A2-6
2019 Summer Light Pre-Project Case B	N-0 (System Normal Condition)	Figure A2-7
	9L29 (Oakland 946S - Coyote Lake 963S)	Figure A2-8
	912L\9L912 (Red Deer 63S - Nevis 766S)	Figure A2-9
	648ST1 (Metiskow 648S Transformer T1)	Figure A2-10
	766S901T (Nevis 766S Transformer 901T)	Figure A2-11
	9L20 (Nevis 766S - Cordel 755S)	Figure A2-12
2019 Summer Peak Pre-Project Case A	N-0 (System Normal Condition)	Figure A2-13
	395ST1 (North Holden 395S Transformer T1)	Figure A2-14
	7L749\749L\7LB749 (Edgerton 899S - Briker 880S - Lloydminster 716S)	Figure A2-15
	899ST3A (Edgerton 899S Transformer T3A)	Figure A2-16
	7L77 (North Holden 395S - Vegreville 709S)	Figure A2-17
	648ST1 (Metiskow 648S Transformer T1)	Figure A2-18
	EATL (Newell 2075S - Heathfield 2029S)	Figure A2-19
	7L701\7LA701\701L (Battle River 757S - Heisler 764S - Strome 223S)	Figure A2-20
	749L\749AL (Metiskow 648S - Edgerton 899S)	Figure A2-21
	7L50 (Battle River 757S - Jarrow 252S - Buffalo Creek 526S)	Figure A2-22
	766S901T (Nevis 766S Transformer 901T)	Figure A2-23
	966L\9L966 (Hansman Lake 650S - Pemukan 932S)	Figure A2-24
	9L16 (Tinchebray 972S - Cordel 755S)	Figure A2-25
	7L42 (Hill 751S - Lloydminster 716S)	Figure A2-26
	701L (North Holden 395S - Strome 223S)	Figure A2-27
	9L29 (Oakland 946S - Coyote Lake 963S)	Figure A2-28
	912L\9L912 (Red Deer 63S - Nevis 766S)	Figure A2-29
2019 Summer Peak Pre-Project Case B	N-0 (System Normal Condition)	Figure A2-30
	51ST3 or 51ST4 (Wainwright 51S Transformer T3 or T4)	Figure A2-31
	912L\9L912 (Red Deer 63S - Nevis 766S)	Figure A2-32
	7L749\749L\7LB749 (Edgerton 899S - Briker 880S - Lloydminster 716S)	Figure A2-33
	7L42 (Hill 751S - Lloydminster 716S)	Figure A2-34
	899ST3A (Edgerton 899S Transformer T3A)	Figure A2-35
	EATL (Newell 2075S - Heathfield 2029S)	Figure A2-36
	9L20 (Nevis 766S - Cordel 755S)	Figure A2-37
	9L29 (Oakland 946S - Coyote Lake 963S)	Figure A2-38
	7L77 (North Holden 395S - Vegreville 709S)	Figure A2-39
	966L\9L966 (Hansman Lake 650S - Pemukan 932S)	Figure A2-40
	766S901T (Nevis 766S Transformer 901T)	Figure A2-41
	749L\749AL (Metiskow 648S - Edgerton 899S)	Figure A2-42
	395ST1 (North Holden 395S Transformer T1)	Figure A2-43
	7L701\7LA701\701L (Battle River 757S - Heisler 764S - Strome 223S)	Figure A2-44

Scenario and Case Name	Contingency (System Element Lost)	Figure Number
	701L (North Holden 395S - Strome 223S)	Figure A2-45
2019 Winter Peak Pre-Project Case A	N-0 (System Normal Condition)	Figure A2-46
	9L20 (Nevis 766S - Cordel 755S)	Figure A2-47
	7L50 (Battle River 757S - Jarrow 252S - Buffalo Creek 526S)	Figure A2-48
	9L29 (Oakland 946S - Coyote Lake 963S)	Figure A2-49
	749L\749AL (Metiskow 648S - Edgerton 899S)	Figure A2-50
	7L129\7LA129 (Buffalo Creek 526S - Vermilion 710S - Bauer 918S)	Figure A2-51
	526ST1 or 526ST2 (Buffalo Creek 526S Transformer T1 or T2)	Figure A2-52
2019 Winter Peak Pre-Project Case B	N-0 (System Normal Condition)	Figure A2-53
	395ST1 (North Holden 395S Transformer T1)	Figure A2-54
	766S901T (Nevis 766S Transformer 901T)	Figure A2-55
	749L\749AL (Metiskow 648S - Edgerton 899S)	Figure A2-56
	7L749\749L\7LB749 (Edgerton 899S - Briker 880S - Lloydminster 716S)	Figure A2-57
	701L (North Holden 395S - Strome 223S)	Figure A2-58
	9L29 (Oakland 946S - Coyote Lake 963S)	Figure A2-59
	7L129\7LA129 (Buffalo Creek 526S - Vermilion 710S - Bauer 918S)	Figure A2-60
	899ST3A (Edgerton 899S Transformer T3A)	Figure A2-61
	9L20 (Nevis 766S - Cordel 755S)	Figure A2-62
	526ST1 or 526ST2 (Buffalo Creek 526S Transformer T1 or T2)	Figure A2-63
	912L\9L912 (Red Deer 63S - Nevis 766S)	Figure A2-64
	EATL (Newell 2075S - Heathfield 2029S)	Figure A2-65
	7L701\7LA701\701L (Battle River 757S - Heisler 764S - Strome 223S)	Figure A2-66

Figure A2-1: 2019 Summer Light Pre-Project Case A - N-0 (System Normal Condition)

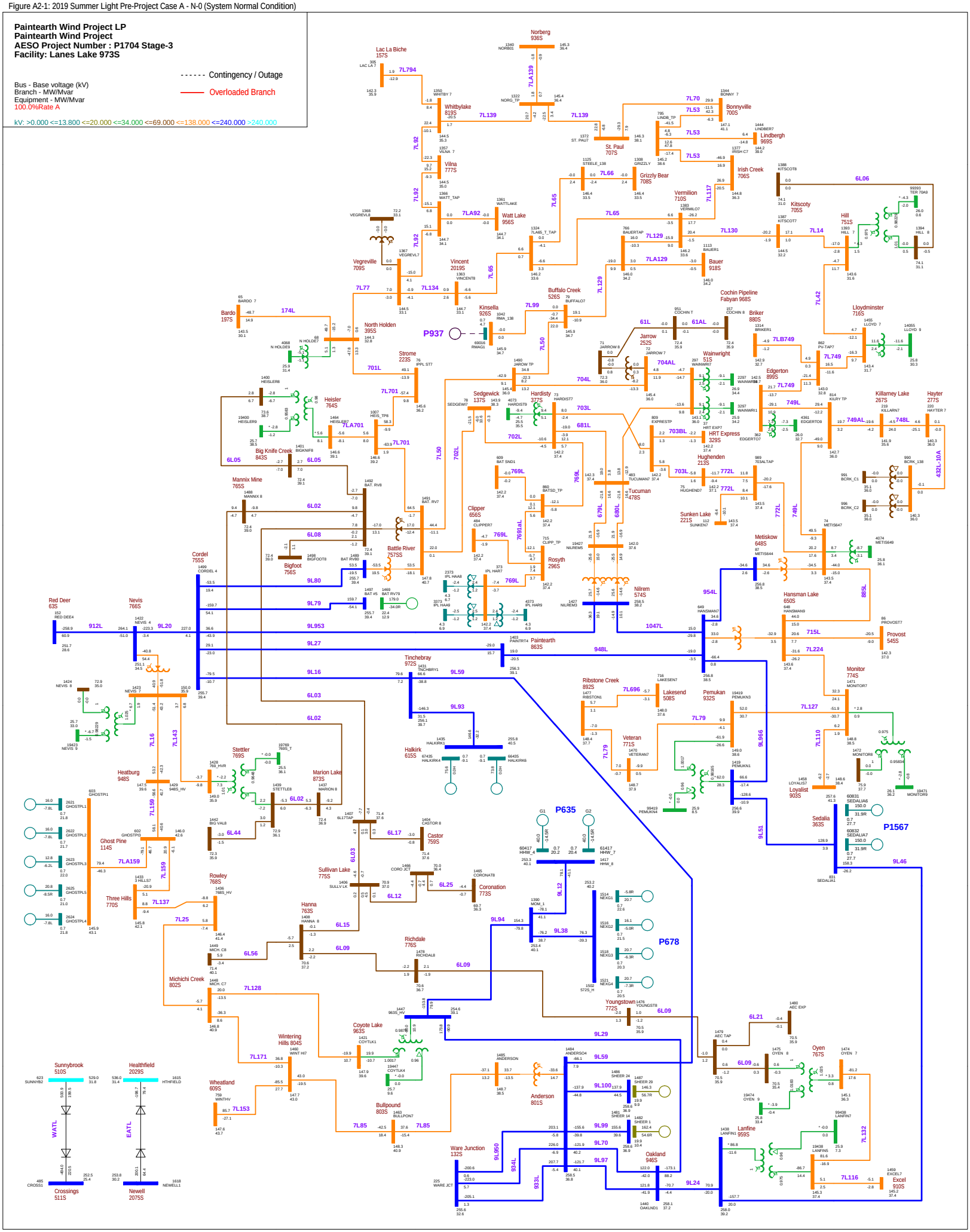

Figure A2-2: 2019 Summer Light Pre-Project Case A - Contingency of 9L29 (Oakland 946S - Coyote Lake 963S)

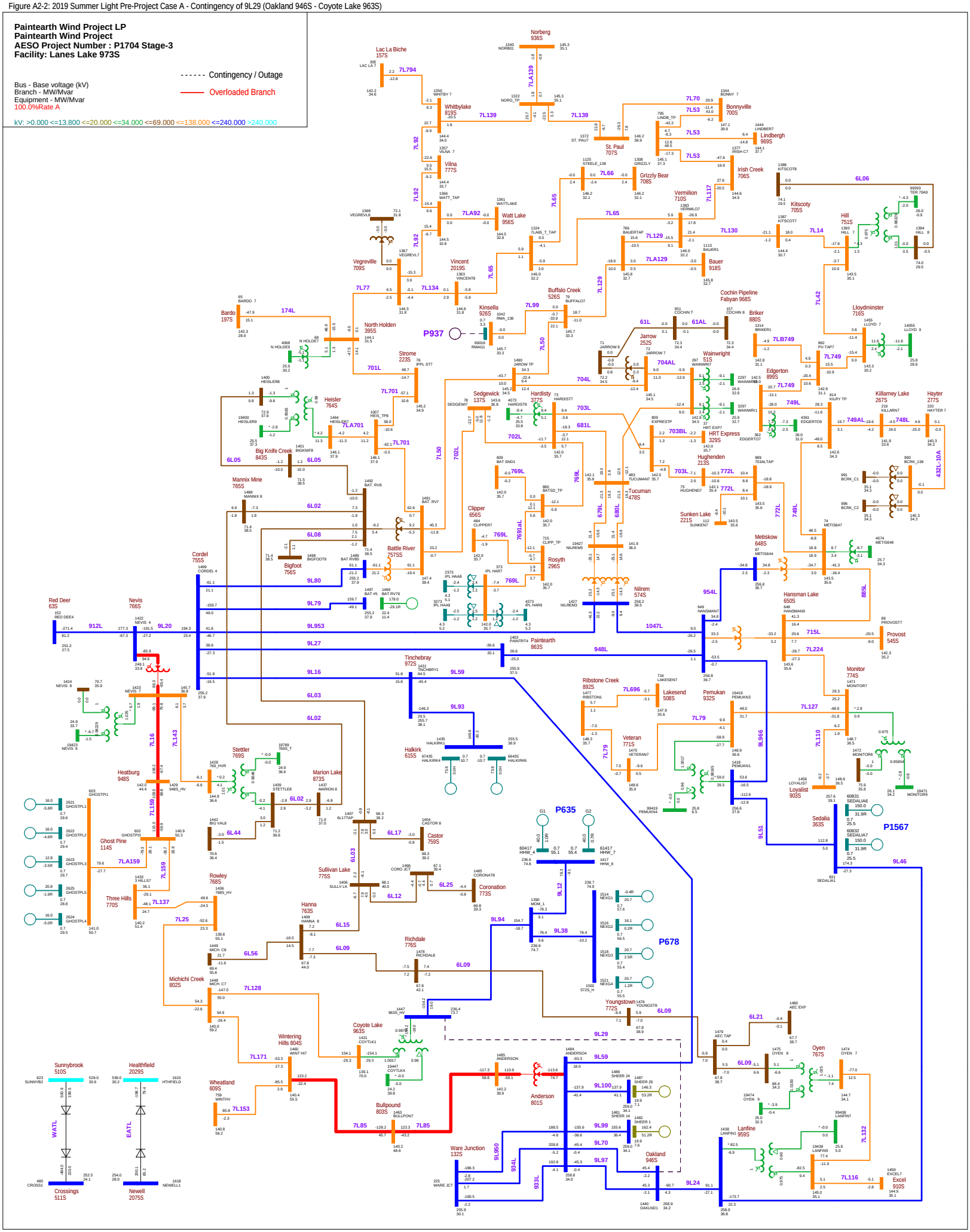
Paintearth Wind Project LP
Paintearth Wind Project
AESO Project Number : P1704 Stage-3
Facility: Lanes Lake 973S
Contingency / Outage
Overloaded Branch
Bus - Base voltage (kV)
Branch - MW/Mvar
Equipment - MW/Mvar
100.0%Rate A
kV: >0.000 <=13.800 <=20.000 <=34.000 <=69.000 <=138.000 <=240.000 >240.000
Norberg 936S
Lac La Biche 157S
Whitbylake 819S
Vilna 777S
Watt Lake 956S
Vegreville 709S
Vincent 2019S
Kinsella 926S
Buffalo Creek 526S
St. Paul 707S
Bonnyville 700S
Lindbergh 969S
Irish Creek 706S
Grizzly Bear 708S
Vermilion 710S
Kitscoty 705S
Hill 751S
Lloydminster 716S
Bauer 918S
Cochin Pipeline
Fabyan 968S
Briker 880S
Wainwright 51S
Edgerton 899S
Killarney Lake 267S
Hayter 277S
Jarrow 252S
Strome 223S
North Holden 395S
Bardo 197S
Heisler 764S
Big Knife Creek 843S
Mannix Mine 765S
Cordel 755S
Bigfoot 756S
Battle River 757SS
Sedgewick 137S
Hardisty 377S
HRT Express 329S
Hughenden 213S
Tucuman 478S
Clipper 656S
Rosyth 296S
Nilrem 574S
Sunken Lake 221S
Metiskow 648S
Hansman Lake 650S
Provost 545S
Red Deer 63S
Nevis 766S
Paintearth 863S
Tinchebray 972S
Halkirk 615S
Heatburg 948S
Ghost Pine 114S
Three Hills 770S
Stettler 769S
Marion Lake 873S
Castor 759S
Coronation 773S
Sullivan Lake 775S
Hanna 763S
Richdale 776S
Rowley 768S
Michichi Creek 802S
Wintering Hills 804S
Coyote Lake 963S
Wheatland 609S
Bullpound 803S
Anderson 801S
Ware Junction 132S
Oakland 946S
Youngstown 772S
Ribstone Creek 892S
Lakesend 508S
Veteran 771S
Pemukan 932S
Monitor 774S
Loyalist 903S
Sedalia 363S
Oyen 767S
Lanfine 959S
Excel 910S
Sunnybrook 510S
Healthfield 2029S
Crossings 511S
Newell 2075S
P937
P635
P678
P1567
174L
701L
7L701
7LA701
6L05
6L02
6L08
9L80
9L79
9L953
9L27
9L16
6L03
9L59
9L93
6L17
6L44
7LA159
7L159
7L143
7L16
6L02
6L12
6L15
6L09
6L56
7L25
7L128
7L171
7L153
7L85
6L25
9L94
9L38
9L12
9L29
9L100
9L99
9L70
9L97
9L24
9L950
934L
933L
7L92
7LA92
7L139
7LA139
7L794
7L65
7L66
7L117
7L129
7LA129
7L130
7L14
7L134
7L77
7L99
7L50
7L702
7L703
7L704
7L704AL
7L705
7L706
7L707
7L708
7L709
7L710
7L711
7L712
7L713
7L714
7L715
7L716
7L717
7L718
7L719
7L720
7L721
7L722
7L723
7L724
7L725
7L726
7L727
7L728
7L729
7L730
7L731
7L732
7L733
7L734
7L735
7L736
7L737
7L738
7L739
7L740
7L741
7L742
7L743
7L744
7L745
7L746
7L747
7L748
7L749
7L749AL
7L749L
7L750
7L751
7L752
7L753
7L754
7L755
7L756
7L757
7L758
7L759
7L760
7L761
7L762
7L763
7L764
7L765
7L766
7L767
7L768
7L769
7L770
7L771
7L772
7L773
7L774
7L775
7L776
7L777
7L778
7L779
7L780
7L781
7L782
7L783
7L784
7L785
7L786
7L787
7L788
7L789
7L790
7L791
7L792
7L793
7L794
7L795
7L796
7L797
7L798
7L799
7L800
7L801
7L802
7L803
7L804
7L805
7L806
7L807
7L808
7L809
7L810
7L811
7L812
7L813
7L814
7L815
7L816
7L817
7L818
7L819
7L820
7L821
7L822
7L823
7L824
7L825
7L826
7L827
7L828
7L829
7L830
7L831
7L832
7L833
7L834
7L835
7L836
7L837
7L838
7L839
7L840
7L841
7L842
7L843
7L844
7L845
7L846
7L847
7L848
7L849
7L850
7L851
7L852
7L853
7L854
7L855
7L856
7L857
7L858
7L859
7L860
7L861
7L862
7L863
7L864
7L865
7L866
7L867
7L868
7L869
7L870
7L871
7L872
7L873
7L874
7L875
7L876
7L877
7L878
7L879
7L880
7L881
7L882
7L883
7L884
7L885
7L886
7L887
7L888
7L889
7L890
7L891
7L892
7L893
7L894
7L895
7L896
7L897
7L898
7L899
7L900
7L901
7L902
7L903
7L904
7L905
7L906
7L907
7L908
7L909
7L910
7L911
7L912
7L913
7L914
7L915
7L916
7L917
7L918
7L919
7L920
7L921
7L922
7L923
7L924
7L925
7L926
7L927
7L928
7L929
7L930
7L931
7L932
7L933
7L934
7L935
7L936
7L937
7L938
7L939
7L940
7L941
7L942
7L943
7L944
7L945
7L946
7L947
7L948
7L949
7L950
7L951
7L952
7L953
7L954
7L955
7L956
7L957
7L958
7L959
7L960
7L961
7L962
7L963
7L964
7L965
7L966
7L967
7L968
7L969
7L970
7L971
7L972
7L973
7L974
7L975
7L976
7L977
7L978
7L979
7L980
7L981
7L982
7L983
7L984
7L985
7L986
7L987
7L988
7L989
7L990
7L991
7L992
7L993
7L994
7L995
7L996
7L997
7L998
7L999
7L1000
7L1001
7L1002
7L1003
7L1004
7L1005
7L1006
7L1007
7L1008
7L1009
7L1010
7L1011
7L1012
7L1013
7L1014
7L1015
7L1016
7L1017
7L1018
7L1019
7L1020
7L1021
7L1022
7L1023
7L1024
7L1025
7L1026
7L1027
7L1028
7L1029
7L1030
7L1031
7L1032
7L1033
7L1034
7L1035
7L1036
7L1037
7L1038
7L1039
7L1040
7L1041
7L1042
7L1043
7L1044
7L1045
7L1046
7L1047
7L1048
7L1049
7L1050
7L1051
7L1052
7L1053
7L1054
7L1055
7L1056
7L1057
7L1058
7L1059
7L1060
7L1061
7L1062
7L1063
7L1064
7L1065
7L1066
7L1067
7L1068
7L1069
7L1070
7L1071
7L1072
7L1073
7L1074
7L1075
7L1076
7L1077
7L1078
7L1079
7L1080
7L1081
7L1082
7L1083
7L1084
7L1085
7L1086
7L1087
7L1088
7L1089
7L1090
7L1091
7L1092
7L1093
7L1094
7L1095
7L1096
7L1097
7L1098
7L1099
7L1100
7L1101
7L1102
7L1103
7L1104
7L1105
7L1106
7L1107
7L1108
7L1109
7L1110
7L1111
7L1112
7L1113
7L1114
7L1115
7L1116
7L1117
7L1118
7L1119
7L1120
7L1121
7L1122
7L1123
7L1124
7L1125
7L1126
7L1127
7L1128
7L1129
7L1130
7L1131
7L1132
7L1133
7L1134
7L1135
7L1136
7L1137
7L1138
7L1139
7L1140
7L1141
7L1142
7L1143
7L1144
7L1145
7L1146
7L1147
7L1148
7L1149
7L1150
7L1151
7L1152
7L1153
7L1154
7L1155
7L1156
7L1157
7L1158
7L1159
7L1160
7L1161
7L1162
7L1163
7L1164
7L1165
7L1166
7L1167
7L1168
7L1169
7L1170
7L1171
7L1172
7L1173
7L1174
7L1175
7L1176
7L1177
7L1178
7L1179
7L1180
7L1181
7L1182
7L1183
7L1184
7L1185
7L1186
7L1187
7L1188
7L1189
7L1190
7L1191
7L1192
7L1193
7L1194
7L1195
7L1196
7L1197
7L1198
7L1199
7L1200
7L1201
7L1202
7L1203
7L1204
7L1205
7L1206
7L1207
7L1208
7L1209
7L1210
7L1211
7L1212
7L1213
7L1214
7L1215
7L1216
7L1217
7L1218
7L1219
7L1220
7L1221
7L1222
7L1223
7L1224
7L1225
7L1226
7L1227
7L1228
7L1229
7L1230
7L1231
7L1232
7L1233
7L1234
7L1235
7L1236
7L1237
7L1238
7L1239
7L1240
7L1241
7L1242
7L1243
7L1244
7L1245
7L1246
7L1247
7L1248
7L1249
7L1250
7L1251
7L1252
7L1253
7L1254
7L1255
7L1256
7L1257
7L1258
7L1259
7L1260
7L1261
7L1262
7L1263
7L1264
7L1265
7L1266
7L1267
7L1268
7L1269
7L1270
7L1271
7L1272
7L1273
7L1274
7L1275
7L1276
7L1277
7L1278
7L1279
7L1280
7L1281
7L1282
7L1283
7L1284
7L1285
7L1286
7L1287
7L1288
7L1289
7L1290
7L1291
7L1292
7L1293
7L1294
7L1295
7L1296
7L1297
7L1298
7L1299
7L1300
7L1301
7L1302
7L1303
7L1304
7L1305
7L1306
7L1307
7L1308
7L1309
7L1310
7L1311
7L1312
7L1313
7L1314
7L1315
7L1316
7L1317
7L1318
7L1319
7L1320
7L1321
7L1322
7L1323
7L1324
7L1325
7L1326
7L1327
7L1328
7L1329
7L1330
7L1331
7L1332
7L1333
7L1334
7L1335
7L1336
7L1337
7L1338
7L1339
7L1340
7L1341
7L1342
7L1343
7L1344
7L1345
7L1346
7L1347
7L1348
7L1349
7L1350
7L1351
7L1352
7L1353
7L1354
7L1355
7L1356
7L1357
7L1358
7L1359
7L1360
7L1361
7L1362
7L1363
7L1364
7L1365
7L1366
7L1367
7L1368
7L1369
7L1370
7L1371
7L1372
7L1373
7L1374
7L1375
7L1376
7L1377
7L1378
7L1379
7L1380
7L1381
7L1382
7L1383
7L1384
7L1385
7L1386
7L1387
7L1388
7L1389
7L1390
7L1391
7L1392
7L1393
7L1394
7L1395
7L1396
7L1397
7L1398
7L1399
7L1400
7L1401
7L1402
7L1403
7L1404
7L1405
7L1406
7L1407
7L1408
7L1409
7L1410
7L1411
7L1412
7L1413
7L1414
7L1415
7L1416
7L1417
7L1418
7L1419
7L1420
7L1421
7L1422
7L1423
7L1424
7L1425
7L1426
7L1427
7L1428
7L1429
7L1430
7L1431
7L1432
7L1433
7L1434
7L1435
7L1436
7L1437
7L1438
7L1439
7L1440
7L1441
7L1442
7L1443
7L1444
7L1445
7L1446
7L1447
7L1448
7L1449
7L1450
7L1451
7L1452
7L1453
7L1454
7L1455
7L1456
7L1457
7L1458
7L1459
7L1460
7L1461
7L1462
7L1463
7L1464
7L1465
7L1466
7L1467
7L1468
7L1469
7L1470
7L1471
7L1472
7L1473
7L1474
7L1475
7L1476
7L1477
7L1478
7L1479
7L1480
7L1481
7L1482
7L1483
7L1484
7L1485
7L1486
7L1487
7L1488
7L1489
7L1490
7L1491
7L1492
7L1493
7L1494
7L1495
7L1496
7L1497
7L1498
7L1499
7L1500
7L1501
7L1502
7L1503
7L1504
7L1505
7L1506
7L1507
7L1508
7L1509
7L1510
7L1511
7L1512
7L1513
7L1514
7L1515
7L1516
7L1517
7L1518
7L1519
7L1520
7L1521
7L1522
7L1523
7L1524
7L1525
7L1526
7L1527
7L1528
7L1529
7L1530
7L1531
7L1532
7L1533
7L1534
7L1535
7L1536
7L1537
7L1538
7L1539
7L1540
7L1541
7L1542
7L1543
7L1544
7L1545
7L1546
7L1547
7L1548
7L1549
7L1550
7L1551
7L1552
7L1553
7L1554
7L1555
7L1556
7L1557
7L1558
7L1559
7L1560
7L1561
7L1562
7L1563
7L1564
7L1565
7L1566
7L1567
7L1568
7L1569
7L1570
7L1571
7L1572
7L1573
7L1574
7L1575
7L1576
7L1577
7L1578
7L1579
7L1580
7L1581
7L1582
7L1583
7L1584
7L1585
7L1586
7L1587
7L1588
7L1589
7L1590
7L1591
7L1592
7L1593
7L1594
7L1595
7L1596
7L1597
7L1598
7L1599
7L1600
7L1601
7L1602
7L1603
7L1604
7L1605
7L1606
7L1607
7L1608
7L1609
7L1610
7L1611
7L1612
7L1613
7L1614
7L1615
7L1616
7L1617
7L1618
7L1619
7L1620
7L1621
7L1622
7L1623
7L1624
7L1625
7L1626
7L1627
7L1628
7L1629
7L1630
7L1631
7L1632
7L1633
7L1634
7L1635
7L1636
7L1637
7L1638
7L1639
7L1640
7L1641
7L1642
7L1643
7L1644
7L1645
7L1646
7L1647
7L1648
7L1649
7L1650
7L1651
7L1652
7L1653
7L1654
7L1655
7L1656
7L1657
7L1658
7L1659
7L1660
7L1661
7L1662
7L1663
7L1664
7L1665
7L1666
7L1667
7L1668
7L1669
7L1670
7L1671
7L1672
7L1673
7L1674
7L1675
7L1676
7L1677
7L1678
7L1679
7L1680
7L1681
7L1682
7L1683
7L1684
7L1685
7L1686
7L1687
7L1688
7L1689
7L1690
7L1691
7L1692
7L1693
7L1694
7L1695
7L1696
7L1697
7L1698
7L1699
7L1700
7L1701
7L1702
7L1703
7L1704
7L1705
7L1706
7L1707
7L1708
7L1709
7L1710
7L1711
7L1712
7L1713
7L1714
7L1715
7L1716
7L1717
7L1718
7L1719
7L1720
7L1721
7L1722
7L1723
7L1724
7L1725
7L1726
7L1727
7L1728
7L1729
7L1730
7L1731
7L1732
7L1733
7L1734
7L1735
7L1736
7L1737
7L1738
7L1739
7L1740
7L1741
7L1742
7L1743
7L1744
7L1745
7L1746
7L1747
7L1748
7L1749
7L1750
7L1751
7L1752
7L1753
7L1754
7L1755
7L1756
7L1757
7L1758
7L1759
7L1760
7L1761
7L1762
7L1763
7L1764
7L1765
7L1766
7L1767
7L1768
7L1769
7L1770
7L1771
7L1772
7L1773
7L1774
7L1775
7L1776
7L1777
7L1778
7L1779
7L1780
7L1781
7L1782
7L1783
7L1784
7L1785
7L1786
7L1787
7L1788
7L1789
7L1790
7L1791
7L1792
7L1793
7L1794
7L1795
7L1796
7L1797
7L1798
7L1799
7L1800
7L1801
7L1802
7L1803
7L1804
7L1805
7L1806
7L1807
7L1808
7L1809
7L1810
7L1811
7L1812
7L1813
7L1814
7L1815
7L1816
7L1817
7L1818
7L1819
7L1820
7L1821
7L1822
7L1823
7L1824
7L1825
7L1826
7L1827
7L1828
7L1829
7L1830
7L1831
7L1832
7L1833
7L1834
7L1835
7L1836
7L1837
7L1838
7L1839
7L1840
7L1841
7L1842
7L1843
7L1844
7L1845
7L1846
7L1847
7L1848
7L1849
7L1850
7L1851
7L1852
7L1853
7L1854
7L1855
7L1856
7L1857
7L1858
7L1859
7L1860
7L1861
7L1862
7L1863
7L1864
7L1865
7L1866
7L1867
7L1868
7L1869
7L1870
7L1871
7L1872
7L1873
7L1874
7L1875
7L1876
7L1877
7L1878
7L1879
7L1880
7L1881
7L1882
7L1883
7L1884
7L1885
7L1886
7L1887
7L1888
7L1889
7L1890
7L1891
7L1892
7L1893
7L1894
7L1895
7L1896
7L1897
7L1898
7L1899
7L1900
7L1901
7L1902
7L1903
7L1904
7L1905
7L1906
7L1907
7L1908
7L1909
7L1910
7L1911
7L1912
7L1913
7L1914
7L1915
7L1916
7L1917
7L1918
7L1919
7L1920
7L1921
7L1922
7L1923
7L1924
7L1925
7L1926
7L1927
7L1928
7L1929
7L1930
7L1931
7L1932
7L1933
7L1934
7L1935
7L1936
7L1937
7L1938
7L1939
7L1940
7L1941
7L1942
7L1943
7L1944
7L1945
7L1946
7L1947
7L1948
7L1949
7L1950
7L1951
7L1952
7L1953
7L1954
7L1955
7L1956
7L1957
7L1958
7L1959
7L1960
7L1961
7L1962
7L1963
7L1964
7L1965
7L1966
7L1967
7L1968
7L1969
7L1970
7L1971
7L1972
7L1973
7L1974
7L1975
7L1976
7L1977
7L1978
7L1979
7L1980
7L1981
7L1982
7L1983
7L1984
7L1985
7L1986
7L1987
7L1988
7L1989
7L1990
7L1991
7L1992
7L1993
7L1994
7L1995
7L1996
7L1997
7L1998
7L1999
7L2000
7L2001
7L2002
7L2003
7L2004
7L2005
7L2006
7L2007
7L2008
7L2009
7L2010
7L2011
7L2012
7L2013
7L2014
7L2015
7L2016
7L2017
7L2018
7L2019
7L2020
7L2021
7L2022
7L2023
7L2024
7L2025
7L2026
7L2027
7L2028
7L2029
7L2030
7L2031
7L2032
7L2033
7L2034
7L2035
7L2036
7L2037
7L2038
7L2039
7L2040
7L2041
7L2042
7L2043
7L2044
7L2045
7L2046
7L2047
7L2048
7L2049
7L2050
7L2051
7L2052
7L2053
7L2054
7L2055
7L2056
7L2057
7L2058
7L2059
7L2060
7L2061
7L2062
7L2063
7L2064
7L2065
7L2066
7L2067
7L2068
7L2069
7L2070
7L2071
7L2072
7L2073
7L2074
7L2075
7L2076
7L2077
7L2078
7L2079
7L2080
7L2081
7L2082
7L2083
7L2084
7L2085
7L2086
7L2087
7L2088
7L2089
7L2090
7L2091
7L2092
7L2093
7L2094
7L2095
7L2096
7L2097
7L2098
7L2099
7L2100
7L2101
7L2102
7L2103
7L2104
7L2105
7L2106
7L2107
7L2108
7L2109
7L2110
7L2111
7L2112
7L2113
7L2114
7L2115
7L2116
7L2117
7L2118
7L2119
7L2120
7L2121
7L2122
7L2123
7L2124
7L2125
7L2126
7L2127
7L2128
7L2129
7L2130
7L2131
7L2132
7L2133
7L2134
7L2135
7L2136
7L2137
7L2138
7L2139
7L2140
7L2141
7L2142
7L2143
7L2144
7L2145
7L2146
7L2147
7L2148
7L2149
7L2150
7L2151
7L2152
7L2153
7L2154
7L2155
7L2156
7L2157
7L2158
7L2159
7L2160
7L2161
7L2162
7L2163
7L2164
7L2165
7L2166
7L2167
7L2168
7L2169
7L2170
7L2171
7L2172
7L2173
7L2174
7L2175
7L2176
7L2177
7L2178
7L2179
7L2180
7L2181
7L2182
7L2183
7L2184
7L2185
7L2186
7L2187
7L2188
7L2189
7L2190
7L2191
7L2192
7L2193
7L2194
7L2195
7L2196
7L2197
7L2198
7L2199
7L2200
7L2201
7L2202
7L2203
7L2204
7L2205
7L2206
7L2207
7L2208
7L2209
7L2210
7L2211
7L2212
7L2213
7L2214
7L2215
7L2216
7L2217
7L2218
7L2219
7L2220
7L2221
7L2222
7L2223
7L2224
7L2225
7L2226
7L2227
7L2228
7L2229
7L2230
7L2231
7L2232
7L2233
7L2234
7L2235
7L2236
7L2237
7L2238
7L2239
7L2240
7L2241
7L2242
7L2243
7L2244
7L2245
7L2246
7L2247
7L2248
7L2249
7L2250
7L2251
7L2252
7L2253
7L2254
7L2255
7L2256
7L2257
7L2258
7L2259
7L2260
7L2261
7L2262
7L2263
7L2264
7L2265
7L2266
7L2267
7L2268
7L2269
7L2270
7L2271
7L2272
7L2273
7L2274
7L2275
7L2276
7L2277
7L2278
7L2279
7L2280
7L2281
7L2282
7L2283
7L2284
7L2285
7L2286
7L2287
7L2288
7L2289
7L2290
7L2291
7L2292
7L2293
7L2294
7L2295
7L2296
7L2297
7L2298
7L2299
7L2300
7L2301
7L2302
7L2303
7L2304
7L2305
7L2306
7L2307
7L2308
7L2309
7L2310
7L2311
7L2312
7L2313
7L2314
7L2315
7L2316
7L2317
7L2318
7L2319
7L2320
7L2321
7L2322
7L2323
7L2324
7L2325
7L2326
7L2327
7L2328
7L2329
7L2330
7L2331
7L2332
7L2333
7L2334
7L2335
7L2336
7L2337
7L2338
7L2339
7L2340
7L2341
7L2342
7L2343
7L2344
7L2345
7L2346
7L2347
7L2348
7L2349
7L2350
7L2351
7L2352
7L2353
7L2354
7L2355
7L2356
7L2357
7L2358
7L2359
7L2360
7L2361
7L2362
7L2363
7L2364
7L2365
7L2366
7L2367
7L2368
7L2369
7L2370
7L2371
7L2372
7L2373
7L2374
7L2375
7L2376
7L2377
7L2378
7L2379
7L2380
7L2381
7L2382
7L2383
7L2384
7L2385
7L2386
7L2387
7L2388
7L2389
7L2390
7L2391
7L2392
7L2393
7L2394
7L2395
7L2396
7L2397
7L2398
7L2399
7L2400
7L2401
7L2402
7L2403
7L2404
7L2405
7L2406
7L2407
7L2408
7L2409
7L2410
7L2411
7L2412
7L2413
7L2414
7L2415
7L2416
7L2417
7L2418
7L2419
7L2420
7L2421
7L2422
7L2423
7L2424
7L2425
7L2426
7L2427
7L2428
7L2429
7L2430
7L2431
7L2432
7L2433
7L2434
7L2435
7L2436
7L2437
7L2438
7L2439
7L2440
7L2441
7L2442
7L2443
7L2444
7L2445
7L2446
7L2447
7L2448
7L2449
7L2450
7L2451
7L2452
7L2453
7L2454
7L2455
7L2456
7L2457
7L2458
7L2459
7L2460
7L2461
7L2462
7L2463
7L2464
7L2465
7L2466
7L2467
7L2468
7L2469
7L2470
7L2471
7L2472
7L2473
7L2474
7L2475
7L2476
7L2477
7L2478
7L2479
7L2480
7L2481
7L2482
7L2483
7L2484
7L2485
7L2486
7L2487
7L2488
7L2489
7L2490
7L2491
7L2492
7L2493
7L2494
7L2495
7L2496
7L2497
7L2498
7L2499
7L2500
7L2501
7L2502
7L2503
7L2504
7L2505
7L2506
7L2507
7L2508
7L2509
7L2510
7L2511
7L2512
7L2513
7L2514
7L2515
7L2516
7L2517
7L2518
7L2519
7L2520
7L2521
7L2522
7L2523
7L2524
7L2525
7L2526
7L2527
7L2528
7L2529
7L2530
7L2531
7L2532
7L2533
7L2534
7L2535
7L2536
7L2537
7L2538
7L2539
7L2540
7L2541
7L2542
7L2543
7L2544
7L2545
7L2546
7L2547
7L2548
7L2549
7L2550
7L2551
7L2552
7L2553
7L2554
7L2555
7L2556
7L2557
7L2558
7L2559
7L2560
7L2561
7L2562
7L2563
7L2564
7L2565
7L2566
7L2567
7L2568
7L2569
7L2570
7L2571
7L2572
7L2573
7L2574
7L2575
7L2576
7L2577
7L2578
7L2579
7L2580
7L2581
7L2582
7L2583
7L2584
7L2585
7L2586
7L2587
7L2588
7L2589
7L2590
7L2591
7L2592
7L2593
7L2594
7L2595
7L2596
7L2597
7L2598
7L2599
7L2600
7L2601
7L2602
7L2603
7L2604
7L2605
7L2606
7L2607
7L2608
7L2609
7L2610
7L2611
7L2612
7L2613
7L2614
7L2615
7L2616
7L2617
7L2618
7L2619
7L2620
7L2621
7L2622
7L2623
7L2624
7L2625
7L2626
7L2627
7L2628
7L2629
7L2630
7L2631
7L2632
7L2633
7L2634
7L2635
7L2636
7L2637
7L2638
7L2639
7L2640
7L2641
7L2642
7L2643
7L2644
7L2645
7L2646
7L2647
7L2648
7L2649
7L2650
7L2651
7L2652
7L2653
7L2654
7L2655
7L2656
7L2657
7L2658
7L2659
7L2660
7L2661
7L2662
7L2663
7L2664
7L2665
7L2666
7L2667
7L2668
7L2669
7L2670
7L2671
7L2672
7L2673
7L2674
7L2675
7L2676
7L2677
7L2678
7L2679
7L2680
7L2681
7L2682
7L2683
7L2684
7L2685
7L2686
7L2687
7L2688
7L2689
7L2690
7L2691
7L2692
7L2693
7L2694
7L2695
7L2696
7L2697
7L2698
7L2699
7L2700
7L2701
7L2702
7L2703
7L2704
7L2705
7L2706
7L2707
7L2708
7L2709
7L2710
7L2711
7L2712
7L2713
7L2714
7L2715
7L2716
7L2717
7L2718
7L2719
7L2720
7L2721
7L2722
7L2723
7L2724
7L2725
7L2726
7L2727
7L2728
7L2729
7L2730
7L2731
7L2732
7L2733
7L2734
7L2735
7L2736
7L2737
7L2738
7L2739
7L2740
7L2741
7L2742
7L2743
7L2744
7L2745
7L2746
7L2747
7L2748
7L2749
7L2750
7L2751
7L2752
7L2753
7L2754
7L2755
7L2756
7L2757
7L2758
7L2759
7L2760
7L2761
7L2762
7L2763
7L2764
7L2765
7L2766
7L2767
7L2768
7L2769
7L2770
7L2771
7L2772
7L2773
7L2774
7L2775
7L2776
7L2777
7L2778
7L2779
7L2780
7L2781
7L2782
7L2783
7L2784
7L2785
7L2786
7L2787
7L2788
7L2789
7L2790
7L2791
7L2792
7L2793
7L2794
7L2795
7L2796
7L2797
7L2798
7L2799
7L2800
7L2801
7L2802
7L2803
7L2804
7L2805
7L2806
7L2807
7L2808
7L2809
7L2810
7L2811
7L2812
7L2813
7L2814
7L2815
7L2816
7L2817
7L2818
7L2819
7L2820
7L2821
7L2822
7L2823
7L2824
7L2825
7L2826
7L2827
7L2828
7L2829
7L2830
7L2831
7L2832
7L2833
7L2834
7L2835
7L2836
7L2837
7L2838
7L2839
7L2840
7L2841
7L2842
7L2843
7L2844
7L2845
7L2846
7L2847
7L2848
7L2849
7L2850
7L2851
7L2852
7L2853
7L2854
7L2855
7L2856
7L2857
7L2858
7L2859
7L2860
7L2861
7L2862
7L2863
7L2864
7L2865
7L2866
7L2867
7L2868
7L2869
7L2870
7L2871
7L2872
7L2873
7L2874
7L2875
7L2876
7L2877
7L2878
7L2879
7L2880
7L2881
7L2882
7L2883
7L2884
7L2885
7L2886
7L2887
7L2888
7L2889
7L2890
7L2891
7L2892
7L2893
7L2894
7L2895
7L2896
7L2897
7L2898
7L2899
7L2900
7L2901
7L2902
7L2903
7L2904
7L2905
7L2906
7L2907
7L2908
7L2909
7L2910
7L2911
7L2912
7L2913
7L2914
7L2915
7L2916
7L2917
7L2918
7L2919
7L2920
7L2921
7L2922
7L2923
7L2924
7L2925
7L2926
7L2927
7L2928
7L2929
7L2930
7L2931
7L2932
7L2933
7L2934
7L2935
7L2936
7L2937
7L2938
7L2939
7L2940
7L2941
7L2942
7L2943
7L2944
7L2945
7L2946
7L2947
7L2948
7L2949
7L2950
7L2951
7L2952
7L2953
7L2954
7L2955
7L2956
7L2957
7L2958
7L2959
7L2960
7L2961
7L2962
7L2963
7L2964
7L2965
7L2966
7L2967
7L2968
7L2969
7L2970
7L2971
7L2972
7L2973
7L2974
7L2975
7L2976
7L2977
7L2978
7L2979
7L2980
7L2981
7L2982
7L2983
7L2984
7L2985
7L2986
7L2987
7L2988
7L2989
7L2990
7L2991
7L2992
7L2993
7L2994
7L2995
7L2996
7L2997
7L2998
7L2999
7L3000
7L3001
7L3002
7L3003
7L3004
7L3005
7L3006
7L3007
7L3008
7L3009
7L3010
7L3011
7L3012
7L3013
7L3014
7L3015
7L3016
7L3017
7L3018
7L3019
7L3020
7L3021
7L3022
7L3023
7L3024
7L3025
7L3026
7L3027
7L3028
7L3029
7L3030
7L3031
7L3032
7L3033
7L3034
7L3035
7L3036
7L3037
7L3038
7L3039
7L3040
7L3041
7L3042
7L3043
7L3044
7L3045
7L3046
7L3047
7L3048
7L3049
7L3050
7L3051
7L3052
7L3053
7L3054
7L3055
7L3056
7L3057
7L3058
7L3059
7L3060
7L3061
7L3062
7L3063
7L3064
7L3065
7L3066
7L3067
7L3068
7L3069
7L3070
7L3071
7L3072
7L3073
7L3074
7L3075
7L3076
7L3077
7L3078
7L3079
7L3080
7L3081
7L3082
7L3083
7L3084
7L3085
7L3086
7L3087
7L3088
7L3089
7L3090
7L3091
7L3092
7L3093
7L3094
7L3095
7L3096
7L3097
7L3098
7L3099
7L3100
7L3101
7L3102
7L3103
7L3104
7L3105
7L3106
7L3107
7L3108
7L3109
7L3110
7L3111
7L3112
7L3113
7L3114
7L3115
7L3116
7L3117
7L3118
7L3119
7L3120
7L3121
7L3122
7L3123
7L3124
7L3125
7L3126
7L3127
7L3128
7L3129
7L3130
7L3131
7L3132
7L3133
7L3134
7L3135
7L3136
7L3137
7L3138
7L3139
7L3140
7L3141
7L3142
7L3143
7L3144
7L3145
7L3146
7L3147
7L3148
7L3149
7L3150
7L3151
7L3152
7L3153
7L3154
7L3155
7L3156
7L3157
7L3158
7L3159
7L3160
7L3161
7L3162
7L3163
7L3164
7L3165
7L3166
7L3167
7L3168
7L3169
7L3170
7L3171
7L3172
7L3173
7L3174
7L3175
7L3176
7L3177
7L3178
7L3179
7L3180
7L3181
7L3182
7L3183
7L3184
7L3185
7L3186
7L3187
7L3188
7L3189
7L3190
7L3191
7L3192
7L3193
7L3194
7L3195
7L3196
7L3197
7L3198
7L3199
7L3200
7L3201
7L3202
7L3203
7L3204
7L3205
7L3206
7L3207
7L3208
7L3209
7L3210
7L3211
7L3212
7L3213
7L3214
7L3215
7L3216
7L3217
7L3218
7L3219
7L3220
7L3221
7L3222
7L3223
7L3224
7L3225
7L3226
7L3227
7L3228
7L3229
7L3230
7L3231
7L3232
7L3233
7L3234
7L3235
7L3236
7L3237
7L3238
7L3239
7L3240
7L3241
7L3242
7L3243
7L3244
7L3245
7L3246
7L3247
7L3248
7L3249
7L3250
7L3251
7L3252
7L3253
7L3254
7L3255
7L3256
7L3257
7L3258
7L3259
7L3260
7L3261
7L3262
7L3263
7L3264
7L3265
7L3266
7L3267
7L3268
7L3269
7L3270
7L3271
7L3272
7L3273
7L3274
7L3275
7L3276
7L3277
7L3278
7L3279
7L3280
7L3281
7L3282
7L3283
7L3284
7L3285
7L3286
7L3287
7L3288
7L3289
7L3290
7L3291
7L3292
7L3293
7L3294
7L3295
7L3296
7L3297
7L3298
7L3299
7L3300
7L3301
7L3302
7L3303
7L3304
7L3305
7L3306
7L3307
7L3308
7L3309
7L3310
7L3311
7L3312
7L3313
7L3314
7L3315
7L3316
7L3317
7L3318
7L3319
7L3320
7L3321
7L3322
7L3323
7L3324
7L3325
7L3326
7L3327
7L3328
7L3329
7L3330
7L3331
7L3332
7L3333
7L3334
7L3335
7L3336
7L3337
7L3338
7L3339
7L3340
7L3341
7L3342
7L3343
7L3344
7L3345
7L3346
7L3347
7L3348
7L3349
7L3350
7L3351
7L3352
7L3353
7L3354
7L3355
7L3356
7L3357
7L3358
7L3359
7L3360
7L3361
7L3362
7L3363
7L3364
7L3365
7L3366
7L3367
7L3368
7L3369
7L3370
7L3371
7L3372
7L3373
7L3374
7L3375
7L3376
7L3377
7L3378
7L3379
7L3380
7L3381
7L3382
7L3383
7L3384
7L3385
7L3386
7L3387
7L3388
7L3389
7L3390
7L3391
7L3392
7L3393
7L3394
7L3395
7L3396
7L3397
7L3398
7L3399
7L3400
7L3401
7L3402
7L3403
7L3404
7L3405
7L3406
7L3407
7L3408
7L3409
7L3410
7L3411
7L3412
7L3413
7L3414
7L3415
7L3416
7L3417
7L3418
7L3419
7L3420
7L3421
7L3422
7L3423
7L3424
7L3425
7L3426
7L3427
7L3428
7L3429
7L3430
7L3431
7L3432
7L3433
7L3434
7L3435
7L3436
7L3437
7L3438
7L3439
7L3440
7L3441
7L3442
7L3443
7L3444
7L3445
7L3446
7L3447
7L3448
7L3449
7L3450
7L3451
7L3452
7L3453
7L3454
7L3455
7L3456
7L3457
7L3458
7L3459
7L3460
7L3461
7L3462
7L3463
7L3464
7L3465
7L3466
7L3467
7L3468
7L3469
7L3470
7L3471
7L3472
7L3473
7L3474
7L3475
7L3476
7L3477
7L3478
7L3479
7L3480
7L3481
7L3482
7L3483
7L3484
7L3485
7L3486
7L3487
7L3488
7L3489
7L3490
7L3491
7L3492
7L3493
7L3494
7L3495
7L3496
7L3497
7L3498
7L3499
7L3500
7L3501
7L3502
7L3503
7L3504
7L3505
7L3506
7L3507
7L3508
7L3509
7L3510
7L3511
7L3512
7L3513
7L3514
7L3515
7L3516
7L3517
7L3518
7L3519
7L3520
7L3521
7L3522
7L3523
7L3524
7L3525
7L3526
7L3527
7L3528
7L3529
7L3530
7L3531
7L3532
7L3533
7L3534
7L3535
7L3536
7L3537
7L3538
7L3539
7L3540
7L3541
7L3542
7L3543
7L3544
7L3545
7L3546
7L3547
7L3548
7L3549
7L3550
7L3551
7L3552
7L3553
7L3554
7L3555
7L3556
7L3557
7L3558
7L3559
7L3560
7L3561
7L3562
7L3563
7L3564
7L3565
7L3566
7L3567
7L3568
7L3569
7L3570
7L3571
7L3572
7L3573
7L3574
7L3575
7L3576
7L3577
7L3578
7L3579
7L3580
7L3581
7L3582
7L3583
7L3584
7L3585
7L3586
7L3587
7L3588
7L3589
7L3590
7L3591
7L3592
7L3593
7L3594
7L3595
7L3596
7L3597
7L3598
7L3599
7L3600
7L3601
7L3602
7L3603
7L3604
7L3605
7L3606
7L3607
7L3608
7L3609
7L3610
7L3611
7L3612
7L3613
7L3614
7L3615
7L3616
7L3617
7L3618
7L3619
7L3620
7L3621
7L3622
7L3623
7L3624
7L3625
7L3626
7L3627
7L3628
7L3629
7L3630
7L3631
7L3632
7L3633
7L3634
7L3635
7L3636
7L3637
7L3638
7L3639
7L3640
7L3641
7L3642
7L3643
7L3644
7L3645
7L3646
7L3647
7L3648
7L3649
7L3650
7L3651
7L3652
7L3653
7L3654
7L3655
7L3656
7L3657
7L3658
7L3659
7L3660
7L3661
7L3662
7L3663
7L3664
7L3665
7L3666
7L3667
7L3668
7L3669
7L3670
7L3671
7L3672
7L3673
7L3674
7L3675
7L3676
7L3677
7L3678
7L3679
7L3680
7L3681
7L3682
7L3683
7L3684
7L3685
7L3686
7L3687
7L3688
7L3689
7L3690

Figure A2-3: 2019 Summer Light Pre-Project Case A - Contingency of 766S901T (Nevis 766S Transformer 901T)

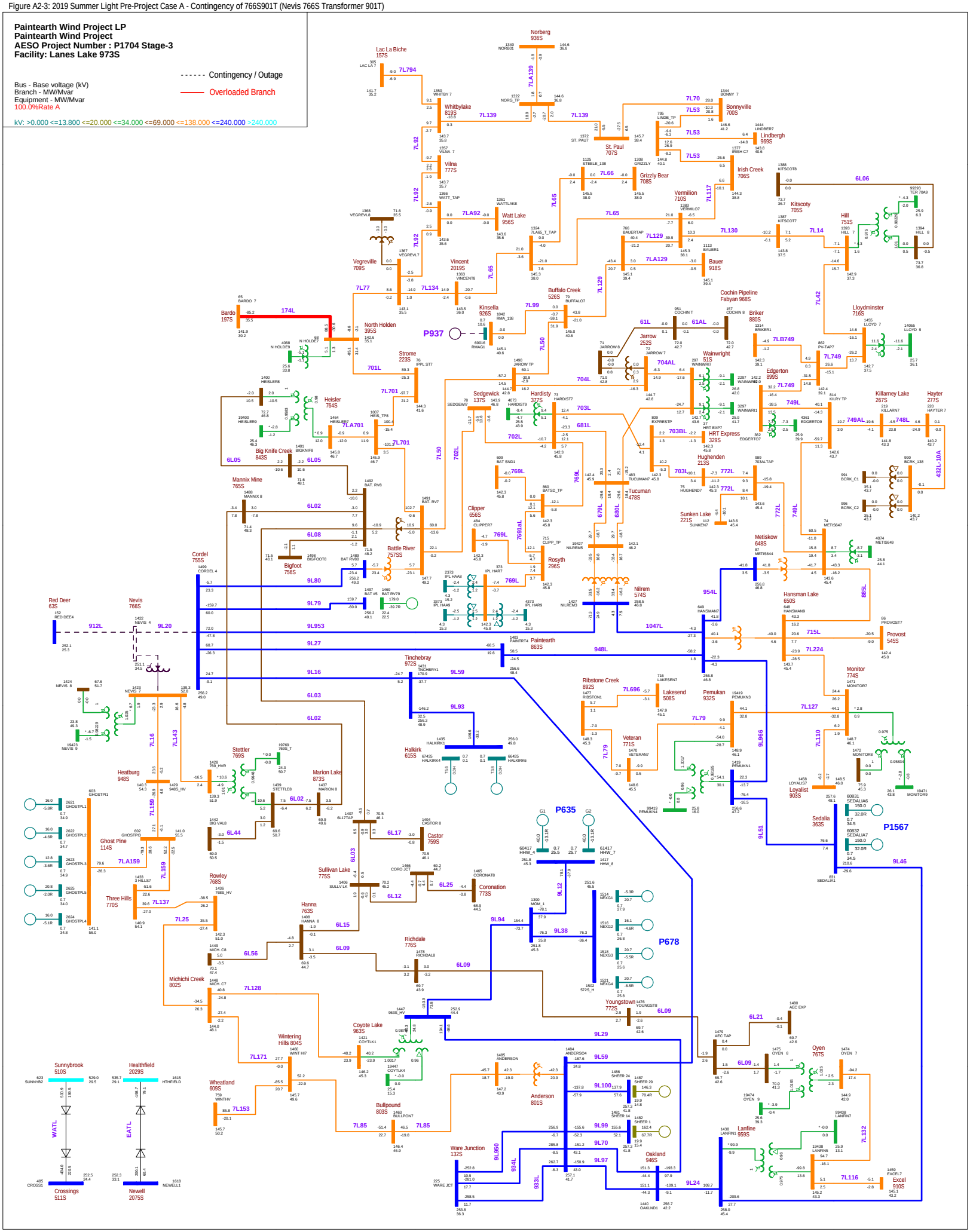

Figure A2-4: 2019 Summer Light Pre-Project Case A - Contingency of 648ST1 (Metiskow 648S Transformer T1)

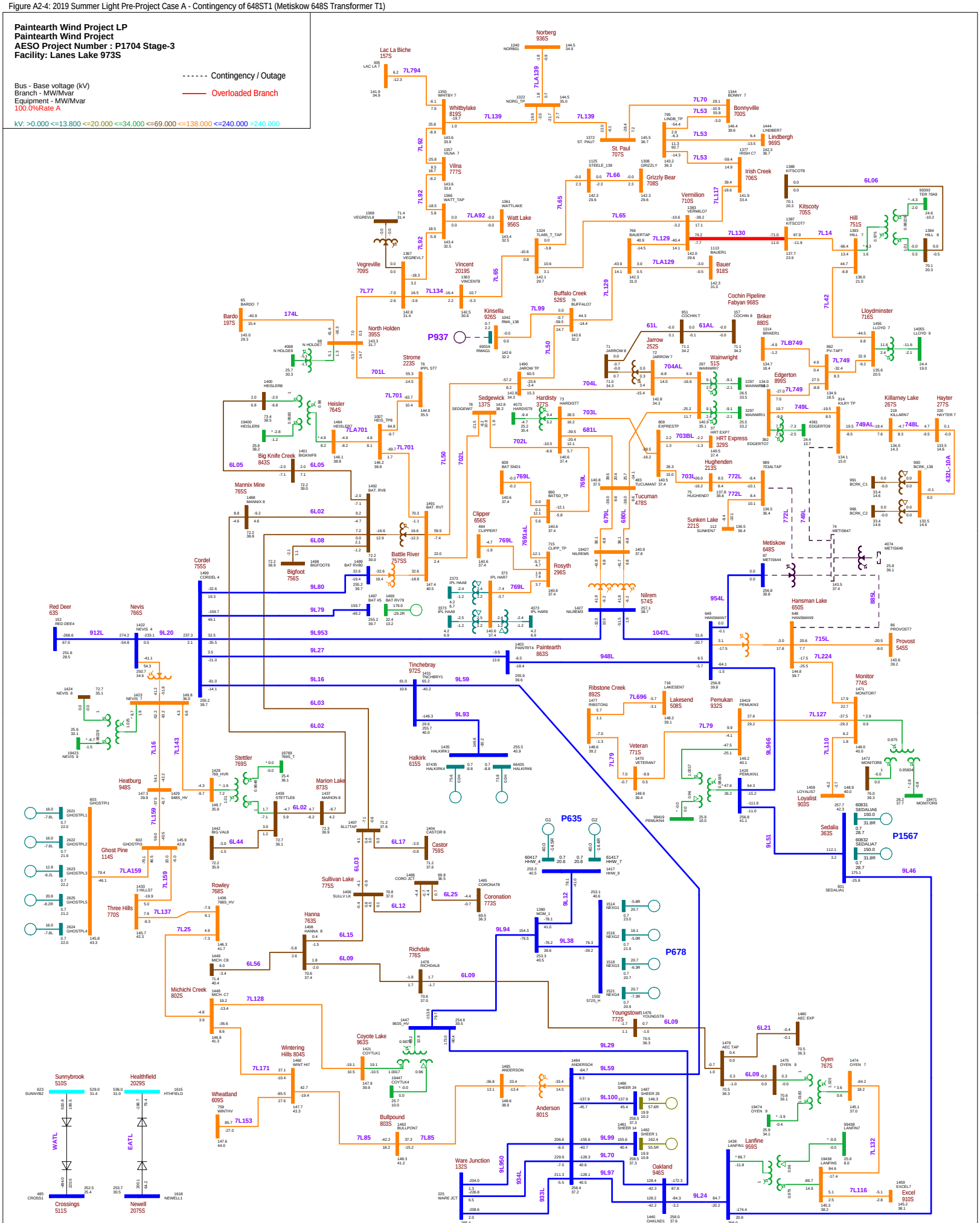

Figure A2-5: 2019 Summer Light Pre-Project Case A - Contingency of 9L20 (Nevis 766S - Cordel 755S)

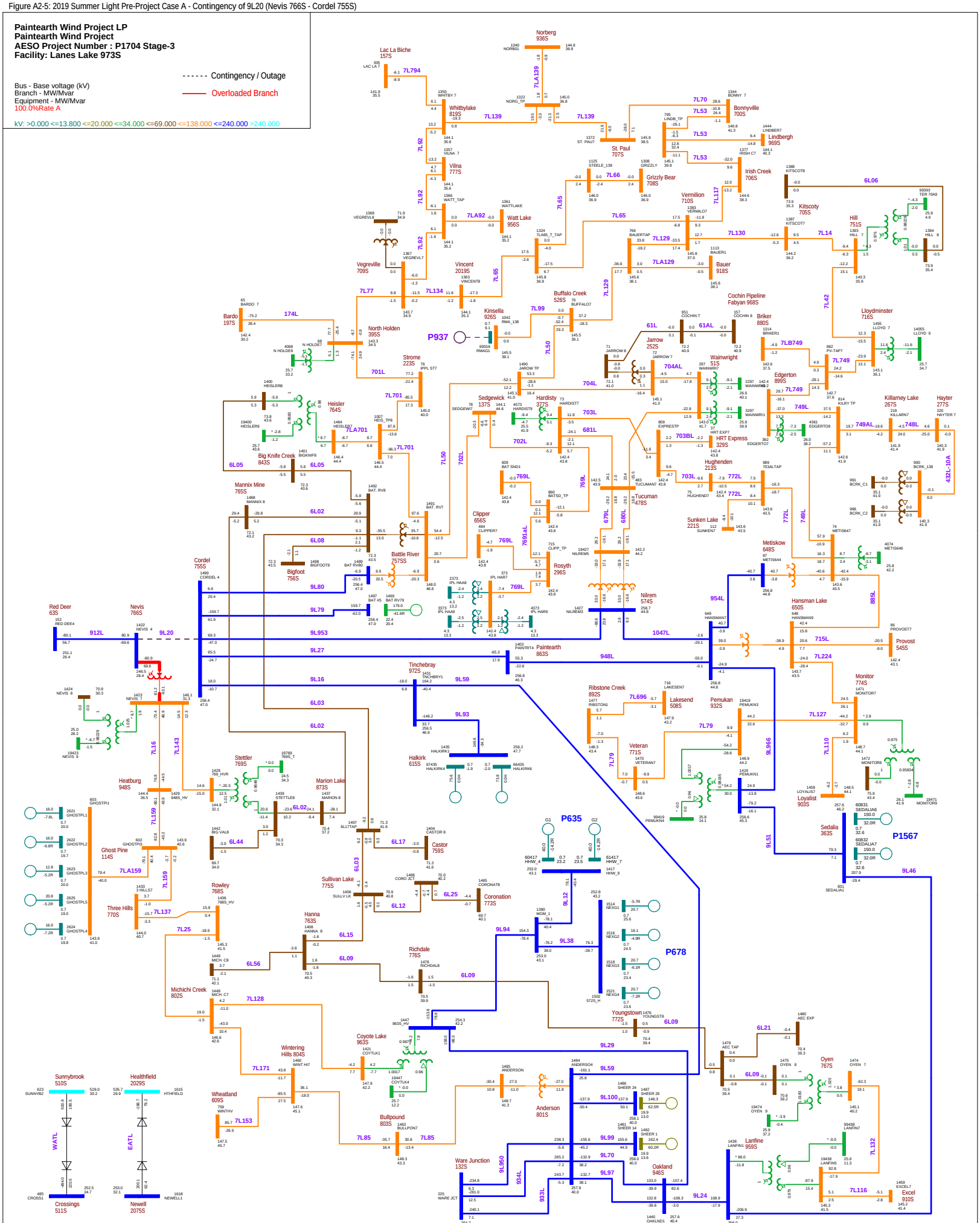

Figure A2-6: 2019 Summer Light Pre-Project Case A - Contingency of 912L\9L912 (Red Deer 63S - Nevis 766S)

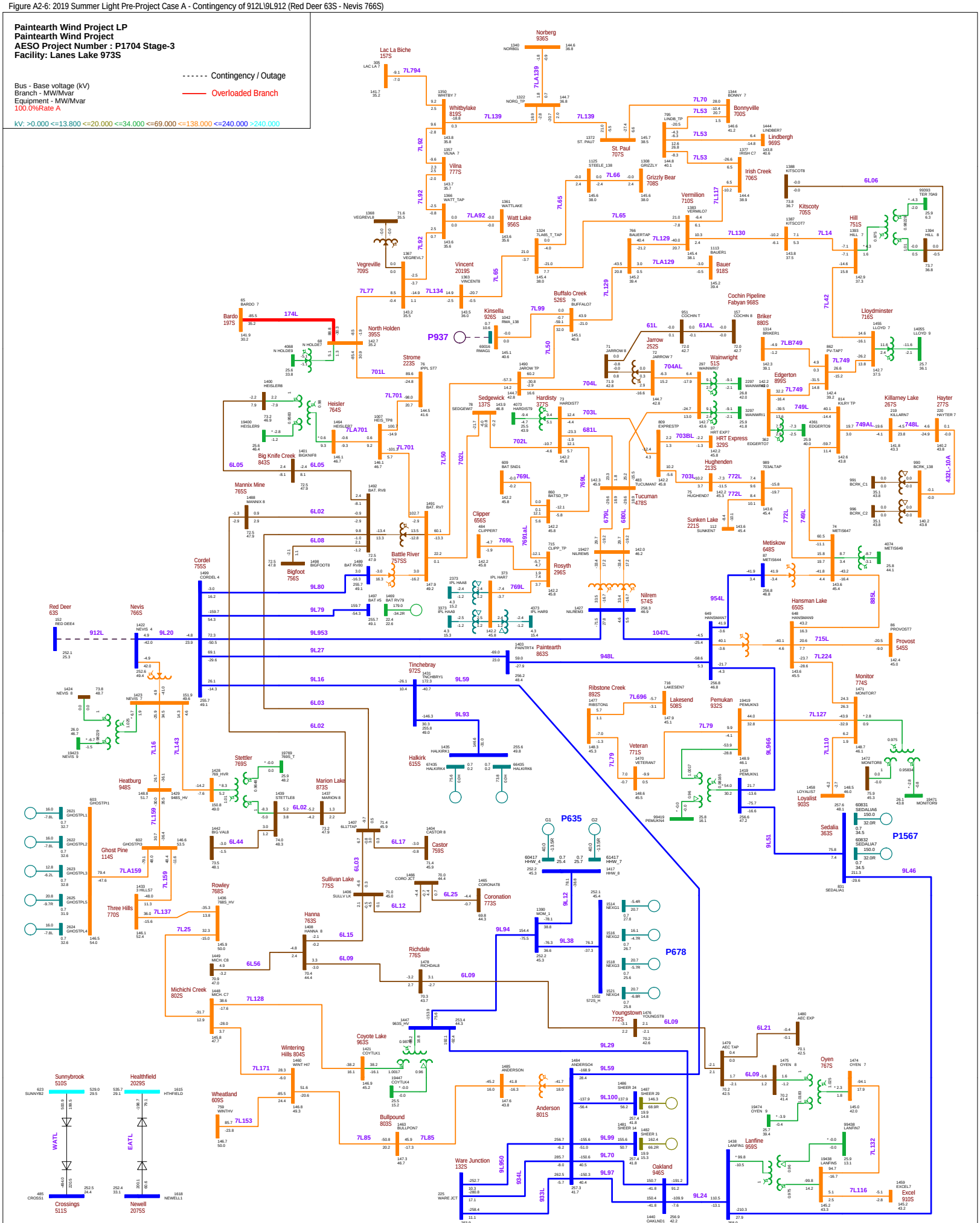
Paintearth Wind Project LP
Paintearth Wind Project
AESO Project Number : P1704 Stage-3
Facility: Lanes Lake 973S
Contingency / Outage
Overloaded Branch
Bus - Base voltage (kV)
Branch - MW/Mvar
Equipment - MW/Mvar
100.0%Rate A
kV: >0.000 <=13.800 <=20.000 <=34.000 <=69.000 <=138.000 <=240.000 >240.000
Norberg 936S
Lac La Biche 157S
Whitbylake 819S
Vilna 777S
Vegreville 709S
Vincent 2019S
Watt Lake 956S
St. Paul 707S
Grizzly Bear 708S
Vermilion 710S
Irish Creek 706S
Bonnyville 700S
Lindbergh 969S
Kitscoty 705S
Hill 751S
Bauer 918S
Buffalo Creek 526S
Cochin Pipeline
Fabyan 968S
Briker 880S
Lloydminster 716S
Bardo 197S
North Holden 395S
P937
Kinsella 926S
Strome 223S
Jarrow 252S
Wainwright 51S
Edgerton 899S
Killarney Lake 267S
Hayter 277S
Heisler 764S
Sedgewick 137S
Hardisty 377S
HRT Express 329S
Hughenden 213S
Tucumar 478S
Sunken Lake 221S
Big Knife Creek 843S
Mannix Mine 765S
Clipper 656S
Battle River 757SS
Bigfoot 756S
Rosyth 296S
Nilrem 574S
Metiskow 648S
Hansman Lake 650S
Provost 545S
Cordel 755S
Red Deer 63S
Nevis 766S
Tinchebray 972S
Paintearth 863S
Ribstone Creek 892S
Lakesend 508S
Pemukan 932S
Monitor 774S
Veteran 771S
Loyalist 903S
Sedalia 363S
Heatburg 948S
Stettler 769S
Marion Lake 873S
Halkirk 615S
Ghost Pine 114S
Three Hills 770S
Rowley 768S
Hanna 763S
Sullivan Lake 775S
Coronation 773S
Castor 759S
Richdale 776S
Michichi Creek 802S
Wintering Hills 804S
Coyote Lake 963S
Wheatland 609S
Bullpound 803S
Anderson 801S
Youngstown 772S
Oyen 767S
Lanfine 959S
Excel 910S
Oakland 946S
Ware Junction 132S
Sunnybrook 510S
Crossings 511S
Healthfield 2029S
Newell 2075S
WATL
EATL
P635
P678
P1567
174L
7L92
7L65
7L66
7L70
7L53
7L139
7L794
7L77
7L134
7L65
7L99
7L50
7L129
7L117
7L130
7L14
7L42
7L749
7L704
7L703
7L702
7L701
7L681
7L769
7L691
7L679
7L680
7L772
7L749
7L748
7L696
7L79
7L127
7L110
7L224
7L715
7L954
7L885
7L1047
7L948
7L9966
7L9951
7L9950
7L9934
7L9933
7L9948
7L9953
7L9927
7L9916
7L9959
7L9930
7L9931
7L9932
7L9929
7L9928
7L9926
7L9925
7L9924
7L9923
7L9922
7L9921
7L9920
7L9919
7L9918
7L9917
7L9915
7L9914
7L9913
7L9912
7L9911
7L9910
7L9909
7L9908
7L9907
7L9906
7L9905
7L9904
7L9903
7L9902
7L9901
7L9900
7L9899
7L9898
7L9897
7L9896
7L9895
7L9894
7L9893
7L9892
7L9891
7L9890
7L9889
7L9888
7L9887
7L9886
7L9885
7L9884
7L9883
7L9882
7L9881
7L9880
7L9879
7L9878
7L9877
7L9876
7L9875
7L9874
7L9873
7L9872
7L9871
7L9870
7L9869
7L9868
7L9867
7L9866
7L9865
7L9864
7L9863
7L9862
7L9861
7L9860
7L9859
7L9858
7L9857
7L9856
7L9855
7L9854
7L9853
7L9852
7L9851
7L9850
7L9849
7L9848
7L9847
7L9846
7L9845
7L9844
7L9843
7L9842
7L9841
7L9840
7L9839
7L9838
7L9837
7L9836
7L9835
7L9834
7L9833
7L9832
7L9831
7L9830
7L9829
7L9828
7L9827
7L9826
7L9825
7L9824
7L9823
7L9822
7L9821
7L9820
7L9819
7L9818
7L9817
7L9816
7L9815
7L9814
7L9813
7L9812
7L9811
7L9810
7L9809
7L9808
7L9807
7L9806
7L9805
7L9804
7L9803
7L9802
7L9801
7L9800
7L9799
7L9798
7L9797
7L9796
7L9795
7L9794
7L9793
7L9792
7L9791
7L9790
7L9789
7L9788
7L9787
7L9786
7L9785
7L9784
7L9783
7L9782
7L9781
7L9780
7L9779
7L9778
7L9777
7L9776
7L9775
7L9774
7L9773
7L9772
7L9771
7L9770
7L9769
7L9768
7L9767
7L9766
7L9765
7L9764
7L9763
7L9762
7L9761
7L9760
7L9759
7L9758
7L9757
7L9756
7L9755
7L9754
7L9753
7L9752
7L9751
7L9750
7L9749
7L9748
7L9747
7L9746
7L9745
7L9744
7L9743
7L9742
7L9741
7L9740
7L9739
7L9738
7L9737
7L9736
7L9735
7L9734
7L9733
7L9732
7L9731
7L9730
7L9729
7L9728
7L9727
7L9726
7L9725
7L9724
7L9723
7L9722
7L9721
7L9720
7L9719
7L9718
7L9717
7L9716
7L9715
7L9714
7L9713
7L9712
7L9711
7L9710
7L9709
7L9708
7L9707
7L9706
7L9705
7L9704
7L9703
7L9702
7L9701
7L9700
7L9699
7L9698
7L9697
7L9696
7L9695
7L9694
7L9693
7L9692
7L9691
7L9690
7L9689
7L9688
7L9687
7L9686
7L9685
7L9684
7L9683
7L9682
7L9681
7L9680
7L9679
7L9678
7L9677
7L9676
7L9675
7L9674
7L9673
7L9672
7L9671
7L9670
7L9669
7L9668
7L9667
7L9666
7L9665
7L9664
7L9663
7L9662
7L9661
7L9660
7L9659
7L9658
7L9657
7L9656
7L9655
7L9654
7L9653
7L9652
7L9651
7L9650
7L9649
7L9648
7L9647
7L9646
7L9645
7L9644
7L9643
7L9642
7L9641
7L9640
7L9639
7L9638
7L9637
7L9636
7L9635
7L9634
7L9633
7L9632
7L9631
7L9630
7L9629
7L9628
7L9627
7L9626
7L9625
7L9624
7L9623
7L9622
7L9621
7L9620
7L9619
7L9618
7L9617
7L9616
7L9615
7L9614
7L9613
7L9612
7L9611
7L9610
7L9609
7L9608
7L9607
7L9606
7L9605
7L9604
7L9603
7L9602
7L9601
7L9600
7L9599
7L9598
7L9597
7L9596
7L9595
7L9594
7L9593
7L9592
7L9591
7L9590
7L9589
7L9588
7L9587
7L9586
7L9585
7L9584
7L9583
7L9582
7L9581
7L9580
7L9579
7L9578
7L9577
7L9576
7L9575
7L9574
7L9573
7L9572
7L9571
7L9570
7L9569
7L9568
7L9567
7L9566
7L9565
7L9564
7L9563
7L9562
7L9561
7L9560
7L9559
7L9558
7L9557
7L9556
7L9555
7L9554
7L9553
7L9552
7L9551
7L9550
7L9549
7L9548
7L9547
7L9546
7L9545
7L9544
7L9543
7L9542
7L9541
7L9540
7L9539
7L9538
7L9537
7L9536
7L9535
7L9534
7L9533
7L9532
7L9531
7L9530
7L9529
7L9528
7L9527
7L9526
7L9525
7L9524
7L9523
7L9522
7L9521
7L9520
7L9519
7L9518
7L9517
7L9516
7L9515
7L9514
7L9513
7L9512
7L9511
7L9510
7L9509
7L9508
7L9507
7L9506
7L9505
7L9504
7L9503
7L9502
7L9501
7L9500
7L9499
7L9498
7L9497
7L9496
7L9495
7L9494
7L9493
7L9492
7L9491
7L9490
7L9489
7L9488
7L9487
7L9486
7L9485
7L9484
7L9483
7L9482
7L9481
7L9480
7L9479
7L9478
7L9477
7L9476
7L9475
7L9474
7L9473
7L9472
7L9471
7L9470
7L9469
7L9468
7L9467
7L9466
7L9465
7L9464
7L9463
7L9462
7L9461
7L9460
7L9459
7L9458
7L9457
7L9456
7L9455
7L9454
7L9453
7L9452
7L9451
7L9450
7L9449
7L9448
7L9447
7L9446
7L9445
7L9444
7L9443
7L9442
7L9441
7L9440
7L9439
7L9438
7L9437
7L9436
7L9435
7L9434
7L9433
7L9432
7L9431
7L9430
7L9429
7L9428
7L9427
7L9426
7L9425
7L9424
7L9423
7L9422
7L9421
7L9420
7L9419
7L9418
7L9417
7L9416
7L9415
7L9414
7L9413
7L9412
7L9411
7L9410
7L9409
7L9408
7L9407
7L9406
7L9405
7L9404
7L9403
7L9402
7L9401
7L9400
7L9399
7L9398
7L9397
7L9396
7L9395
7L9394
7L9393
7L9392
7L9391
7L9390
7L9389
7L9388
7L9387
7L9386
7L9385
7L9384
7L9383
7L9382
7L9381
7L9380
7L9379
7L9378
7L9377
7L9376
7L9375
7L9374
7L9373
7L9372
7L9371
7L9370
7L9369
7L9368
7L9367
7L9366
7L9365
7L9364
7L9363
7L9362
7L9361
7L9360
7L9359
7L9358
7L9357
7L9356
7L9355
7L9354
7L9353
7L9352
7L9351
7L9350
7L9349
7L9348
7L9347
7L9346
7L9345
7L9344
7L9343
7L9342
7L9341
7L9340
7L9339
7L9338
7L9337
7L9336
7L9335
7L9334
7L9333
7L9332
7L9331
7L9330
7L9329
7L9328
7L9327
7L9326
7L9325
7L9324
7L9323
7L9322
7L9321
7L9320
7L9319
7L9318
7L9317
7L9316
7L9315
7L9314
7L9313
7L9312
7L9311
7L9310
7L9309
7L9308
7L9307
7L9306
7L9305
7L9304
7L9303
7L9302
7L9301
7L9300
7L9299
7L9298
7L9297
7L9296
7L9295
7L9294
7L9293
7L9292
7L9291
7L9290
7L9289
7L9288
7L9287
7L9286
7L9285
7L9284
7L9283
7L9282
7L9281
7L9280
7L9279
7L9278
7L9277
7L9276
7L9275
7L9274
7L9273
7L9272
7L9271
7L9270
7L9269
7L9268
7L9267
7L9266
7L9265
7L9264
7L9263
7L9262
7L9261
7L9260
7L9259
7L9258
7L9257
7L9256
7L9255
7L9254
7L9253
7L9252
7L9251
7L9250
7L9249
7L9248
7L9247
7L9246
7L9245
7L9244
7L9243
7L9242
7L9241
7L9240
7L9239
7L9238
7L9237
7L9236
7L9235
7L9234
7L9233
7L9232
7L9231
7L9230
7L9229
7L9228
7L9227
7L9226
7L9225
7L9224
7L9223
7L9222
7L9221
7L9220
7L9219
7L9218
7L9217
7L9216
7L9215
7L9214
7L9213
7L9212
7L9211
7L9210
7L9209
7L9208
7L9207
7L9206
7L9205
7L9204
7L9203
7L9202
7L9201
7L9200
7L9199
7L9198
7L9197
7L9196
7L9195
7L9194
7L9193
7L9192
7L9191
7L9190
7L9189
7L9188
7L9187
7L9186
7L9185
7L9184
7L9183
7L9182
7L9181
7L9180
7L9179
7L9178
7L9177
7L9176
7L9175
7L9174
7L9173
7L9172
7L9171
7L9170
7L9169
7L9168
7L9167
7L9166
7L9165
7L9164
7L9163
7L9162
7L9161
7L9160
7L9159
7L9158
7L9157
7L9156
7L9155
7L9154
7L9153
7L9152
7L9151
7L9150
7L9149
7L9148
7L9147
7L9146
7L9145
7L9144
7L9143
7L9142
7L9141
7L9140
7L9139
7L9138
7L9137
7L9136
7L9135
7L9134
7L9133
7L9132
7L9131
7L9130
7L9129
7L9128
7L9127
7L9126
7L9125
7L9124
7L9123
7L9122
7L9121
7L9120
7L9119
7L9118
7L9117
7L9116
7L9115
7L9114
7L9113
7L9112
7L9111
7L9110
7L9109
7L9108
7L9107
7L9106
7L9105
7L9104
7L9103
7L9102
7L9101
7L9100
7L9099
7L9098
7L9097
7L9096
7L9095
7L9094
7L9093
7L9092
7L9091
7L9090
7L9089
7L9088
7L9087
7L9086
7L9085
7L9084
7L9083
7L9082
7L9081
7L9080
7L9079
7L9078
7L9077
7L9076
7L9075
7L9074
7L9073
7L9072
7L9071
7L9070
7L9069
7L9068
7L9067
7L9066
7L9065
7L9064
7L9063
7L9062
7L9061
7L9060
7L9059
7L9058
7L9057
7L9056
7L9055
7L9054
7L9053
7L9052
7L9051
7L9050
7L9049
7L9048
7L9047
7L9046
7L9045
7L9044
7L9043
7L9042
7L9041
7L9040
7L9039
7L9038
7L9037
7L9036
7L9035
7L9034
7L9033
7L9032
7L9031
7L9030
7L9029
7L9028
7L9027
7L9026
7L9025
7L9024
7L9023
7L9022
7L9021
7L9020
7L9019
7L9018
7L9017
7L9016
7L9015
7L9014
7L9013
7L9012
7L9011
7L9010
7L9009
7L9008
7L9007
7L9006
7L9005
7L9004
7L9003
7L9002
7L9001
7L9000
7L8999
7L8998
7L8997
7L8996
7L8995
7L8994
7L8993
7L8992
7L8991
7L8990
7L8989
7L8988
7L8987
7L8986
7L8985
7L8984
7L8983
7L8982
7L8981
7L8980
7L8979
7L8978
7L8977
7L8976
7L8975
7L8974
7L8973
7L8972
7L8971
7L8970
7L8969
7L8968
7L8967
7L8966
7L8965
7L8964
7L8963
7L8962
7L8961
7L8960
7L8959
7L8958
7L8957
7L8956
7L8955
7L8954
7L8953
7L8952
7L8951
7L8950
7L8949
7L8948
7L8947
7L8946
7L8945
7L8944
7L8943
7L8942
7L8941
7L8940
7L8939
7L8938
7L8937
7L8936
7L8935
7L8934
7L8933
7L8932
7L8931
7L8930
7L8929
7L8928
7L8927
7L8926
7L8925
7L8924
7L8923
7L8922
7L8921
7L8920
7L8919
7L8918
7L8917
7L8916
7L8915
7L8914
7L8913
7L8912
7L8911
7L8910
7L8909
7L8908
7L8907
7L8906
7L8905
7L8904
7L8903
7L8902
7L8901
7L8900
7L8899
7L8898
7L8897
7L8896
7L8895
7L8894
7L8893
7L8892
7L8891
7L8890
7L8889
7L8888
7L8887
7L8886
7L8885
7L8884
7L8883
7L8882
7L8881
7L8880
7L8879
7L8878
7L8877
7L8876
7L8875
7L8874
7L8873
7L8872
7L8871
7L8870
7L8869
7L8868
7L8867
7L8866
7L8865
7L8864
7L8863
7L8862
7L8861
7L8860
7L8859
7L8858
7L8857
7L8856
7L8855
7L8854
7L8853
7L8852
7L8851
7L8850
7L8849
7L8848
7L8847
7L8846
7L8845
7L8844
7L8843
7L8842
7L8841
7L8840
7L8839
7L8838
7L8837
7L8836
7L8835
7L8834
7L8833
7L8832
7L8831
7L8830
7L8829
7L8828
7L8827
7L8826
7L8825
7L8824
7L8823
7L8822
7L8821
7L8820
7L8819
7L8818
7L8817
7L8816
7L8815
7L8814
7L8813
7L8812
7L8811
7L8810
7L8809
7L8808
7L8807
7L8806
7L8805
7L8804
7L8803
7L8802
7L8801
7L8800
7L8799
7L8798
7L8797
7L8796
7L8795
7L8794
7L8793
7L8792
7L8791
7L8790
7L8789
7L8788
7L8787
7L8786
7L8785
7L8784
7L8783
7L8782
7L8781
7L8780
7L8779
7L8778
7L8777
7L8776
7L8775
7L8774
7L8773
7L8772
7L8771
7L8770
7L8769
7L8768
7L8767
7L8766
7L8765
7L8764
7L8763
7L8762
7L8761
7L8760
7L8759
7L8758
7L8757
7L8756
7L8755
7L8754
7L8753
7L8752
7L8751
7L8750
7L8749
7L8748
7L8747
7L8746
7L8745
7L8744
7L8743
7L8742
7L8741
7L8740
7L8739
7L8738
7L8737
7L8736
7L8735
7L8734
7L8733
7L8732
7L8731
7L8730
7L8729
7L8728
7L8727
7L8726
7L8725
7L8724
7L8723
7L8722
7L8721
7L8720
7L8719
7L8718
7L8717
7L8716
7L8715
7L8714
7L8713
7L8712
7L8711
7L8710
7L8709
7L8708
7L8707
7L8706
7L8705
7L8704
7L8703
7L8702
7L8701
7L8700
7L8699
7L8698
7L8697
7L8696
7L8695
7L8694
7L8693
7L8692
7L8691
7L8690
7L8689
7L8688
7L8687
7L8686
7L8685
7L8684
7L8683
7L8682
7L8681
7L8680
7L8679
7L8678
7L8677
7L8676
7L8675
7L8674
7L8673
7L8672
7L8671
7L8670
7L8669
7L8668
7L8667
7L8666
7L8665
7L8664
7L8663
7L8662
7L8661
7L8660
7L8659
7L8658
7L8657
7L8656
7L8655
7L8654
7L8653
7L8652
7L8651
7L8650
7L8649
7L8648
7L8647
7L8646
7L8645
7L8644
7L8643
7L8642
7L8641
7L8640
7L8639
7L8638
7L8637
7L8636
7L8635
7L8634
7L8633
7L8632
7L8631
7L8630
7L8629
7L8628
7L8627
7L8626
7L8625
7L8624
7L8623
7L8622
7L8621
7L8620
7L8619
7L8618
7L8617
7L8616
7L8615
7L8614
7L8613
7L8612
7L8611
7L8610
7L8609
7L8608
7L8607
7L8606
7L8605
7L8604
7L8603
7L8602
7L8601
7L8600
7L8599
7L8598
7L8597
7L8596
7L8595
7L8594
7L8593
7L8592
7L8591
7L8590
7L8589
7L8588
7L8587
7L8586
7L8585
7L8584
7L8583
7L8582
7L8581
7L8580
7L8579
7L8578
7L8577
7L8576
7L8575
7L8574
7L8573
7L8572
7L8571
7L8570
7L8569
7L8568
7L8567
7L8566
7L8565
7L8564
7L8563
7L8562
7L8561
7L8560
7L8559
7L8558
7L8557
7L8556
7L8555
7L8554
7L8553
7L8552
7L8551
7L8550
7L8549
7L8548
7L8547
7L8546
7L8545
7L8544
7L8543
7L8542
7L8541
7L8540
7L8539
7L8538
7L8537
7L8536
7L8535
7L8534
7L8533
7L8532
7L8531
7L8530
7L8529
7L8528
7L8527
7L8526
7L8525
7L8524
7L8523
7L8522
7L8521
7L8520
7L8519
7L8518
7L8517
7L8516
7L8515
7L8514
7L8513
7L8512
7L8511
7L8510
7L8509
7L8508
7L8507
7L8506
7L8505
7L8504
7L8503
7L8502
7L8501
7L8500
7L8499
7L8498
7L8497
7L8496
7L8495
7L8494
7L8493
7L8492
7L8491
7L8490
7L8489
7L8488
7L8487
7L8486
7L8485
7L8484
7L8483
7L8482
7L8481
7L8480
7L8479
7L8478
7L8477
7L8476
7L8475
7L8474
7L8473
7L8472
7L8471
7L8470
7L8469
7L8468
7L8467
7L8466
7L8465
7L8464
7L8463
7L8462
7L8461
7L8460
7L8459
7L8458
7L8457
7L8456
7L8455
7L8454
7L8453
7L8452
7L8451
7L8450
7L8449
7L8448
7L8447
7L8446
7L8445
7L8444
7L8443
7L8442
7L8441
7L8440
7L8439
7L8438
7L8437
7L8436
7L8435
7L8434
7L8433
7L8432
7L8431
7L8430
7L8429
7L8428
7L8427
7L8426
7L8425
7L8424
7L8423
7L8422
7L8421
7L8420
7L8419
7L8418
7L8417
7L8416
7L8415
7L8414
7L8413
7L8412
7L8411
7L8410
7L8409
7L8408
7L8407
7L8406
7L8405
7L8404
7L8403
7L8402
7L8401
7L8400
7L8399
7L8398
7L8397
7L8396
7L8395
7L8394
7L8393
7L8392
7L8391
7L8390
7L8389
7L8388
7L8387
7L8386
7L8385
7L8384
7L8383
7L8382
7L8381
7L8380
7L8379
7L8378
7L8377
7L8376
7L8375
7L8374
7L8373
7L8372
7L8371
7L8370
7L8369
7L8368
7L8367
7L8366
7L8365
7L8364
7L8363
7L8362
7L8361
7L8360
7L8359
7L8358
7L8357
7L8356
7L8355
7L8354
7L8353
7L8352
7L8351
7L8350
7L8349
7L8348
7L8347
7L8346
7L8345
7L8344
7L8343
7L8342
7L8341
7L8340
7L8339
7L8338
7L8337
7L8336
7L8335
7L8334
7L8333
7L8332
7L8331
7L8330
7L8329
7L8328
7L8327
7L8326
7L8325
7L8324
7L8323
7L8322
7L8321
7L8320
7L8319
7L8318
7L8317
7L8316
7L8315
7L8314
7L8313
7L8312
7L8311
7L8310
7L8309
7L8308
7L8307
7L8306
7L8305
7L8304
7L8303
7L8302
7L8301
7L8300
7L8299
7L8298
7L8297
7L8296
7L8295
7L8294
7L8293
7L8292
7L8291
7L8290
7L8289
7L8288
7L8287
7L8286
7L8285
7L8284
7L8283
7L8282
7L8281
7L8280
7L8279
7L8278
7L8277
7L8276
7L8275
7L8274
7L8273
7L8272
7L8271
7L8270
7L8269
7L8268
7L8267
7L8266
7L8265
7L8264
7L8263
7L8262
7L8261
7L8260
7L8259
7L8258
7L8257
7L8256
7L8255
7L8254
7L8253
7L8252
7L8251
7L8250
7L8249
7L8248
7L8247
7L8246
7L8245
7L8244
7L8243
7L8242
7L8241
7L8240
7L8239
7L8238
7L8237
7L8236
7L8235
7L8234
7L8233
7L8232
7L8231
7L8230
7L8229
7L8228
7L8227
7L8226
7L8225
7L8224
7L8223
7L8222
7L8221
7L8220
7L8219
7L8218
7L8217
7L8216
7L8215
7L8214
7L8213
7L8212
7L8211
7L8210
7L8209
7L8208
7L8207
7L8206
7L8205
7L8204
7L8203
7L8202
7L8201
7L8200
7L8199
7L8198
7L8197
7L8196
7L8195
7L8194
7L8193
7L8192
7L8191
7L8190
7L8189
7L8188
7L8187
7L8186
7L8185
7L8184
7L8183
7L8182
7L8181
7L8180
7L8179
7L8178
7L8177
7L8176
7L8175
7L8174
7L8173
7L8172
7L8171
7L8170
7L8169
7L8168
7L8167
7L8166
7L8165
7L8164
7L8163
7L8162
7L8161
7L8160
7L8159
7L8158
7L8157
7L8156
7L8155
7L8154
7L8153
7L8152
7L8151
7L8150
7L8149
7L8148
7L8147
7L8146
7L8145
7L8144
7L8143
7L8142
7L8141
7L8140
7L8139
7L8138
7L8137
7L8136
7L8135
7L8134
7L8133
7L8132
7L8131
7L8130
7L8129
7L8128
7L8127
7L8126
7L8125
7L8124
7L8123
7L8122
7L8121
7L8120
7L8119
7L8118
7L8117
7L8116
7L8115
7L8114
7L8113
7L8112
7L8111
7L8110
7L8109
7L8108
7L8107
7L8106
7L8105
7L8104
7L8103
7L8102
7L8101
7L8100
7L8099
7L8098
7L8097
7L8096
7L8095
7L8094
7L8093
7L8092
7L8091
7L8090
7L8089
7L8088
7L8087
7L8086
7L8085
7L8084
7L8083
7L8082
7L8081
7L8080
7L8079
7L8078
7L8077
7L8076
7L8075
7L8074
7L8073
7L8072
7L8071
7L8070
7L8069
7L8068
7L8067
7L8066
7L8065
7L8064
7L8063
7L8062
7L8061
7L8060
7L8059
7L8058
7L8057
7L8056
7L8055
7L8054
7L8053
7L8052
7L8051
7L8050
7L8049
7L8048
7L8047
7L8046
7L8045
7L8044
7L8043
7L8042
7L8041
7L8040
7L8039
7L8038
7L8037
7L8036
7L8035
7L8034
7L8033
7L8032
7L8031
7L8030
7L8029
7L8028
7L8027
7L8026
7L8025
7L8024
7L8023
7L8022
7L8021
7L8020
7L8019
7L8018
7L8017
7L8016
7L8015
7L8014
7L8013
7L8012
7L8011
7L8010
7L8009
7L8008
7L8007
7L8006
7L8005
7L8004
7L8003
7L8002
7L8001
7L8000
7L7999
7L7998
7L7997
7L7996
7L7995
7L7994
7L7993
7L7992
7L7991
7L7990
7L7989
7L7988
7L7987
7L7986
7L7985
7L7984
7L7983
7L7982
7L7981
7L7980
7L7979
7L7978
7L7977
7L7976
7L7975
7L7974
7L7973
7L7972
7L7971
7L7970
7L7969
7L7968
7L7967
7L7966
7L7965
7L7964
7L7963
7L7962
7L7961
7L7960
7L7959
7L7958
7L7957
7L7956
7L7955
7L7954
7L7953
7L7952
7L7951
7L7950
7L7949
7L7948
7L7947
7L7946
7L7945
7L7944
7L7943
7L7942
7L7941
7L7940
7L7939
7L7938
7L7937
7L7936
7L7935
7L7934
7L7933
7L7932
7L7931
7L7930
7L7929
7L7928
7L7927
7L7926
7L7925
7L7924
7L7923
7L7922
7L7921
7L7920
7L7919
7L7918
7L7917
7L7916
7L7915
7L7914
7L7913
7L7912
7L7911
7L7910
7L7909
7L7908
7L7907
7L7906
7L7905
7L7904
7L7903
7L7902
7L7901
7L7900
7L7899
7L7898
7L7897
7L7896
7L7895
7L7894
7L7893
7L7892
7L7891
7L7890
7L7889
7L7888
7L7887
7L7886
7L7885
7L7884
7L7883
7L7882
7L7881
7L7880
7L7879
7L7878
7L7877
7L7876
7L7875
7L7874
7L7873
7L7872
7L7871
7L7870
7L7869
7L7868
7L7867
7L7866
7L7865
7L7864
7L7863
7L7862
7L7861
7L7860
7L7859
7L7858
7L7857
7L7856
7L7855
7L7854
7L7853
7L7852
7L7851
7L7850
7L7849
7L7848
7L7847
7L7846
7L7845
7L7844
7L7843
7L7842
7L7841
7L7840
7L7839
7L7838
7L7837
7L7836
7L7835
7L7834
7L7833
7L7832
7L7831
7L7830
7L7829
7L7828
7L7827
7L7826
7L7825
7L7824
7L7823
7L7822
7L7821
7L7820
7L7819
7L7818
7L7817
7L7816
7L7815
7L7814
7L7813
7L7812
7L7811
7L7810
7L7809
7L7808
7L7807
7L7806
7L7805
7L7804
7L7803
7L7802
7L7801
7L7800
7L7799
7L7798
7L7797
7L7796
7L7795
7L7794
7L7793
7L7792
7L7791
7L7790
7L7789
7L7788
7L7787
7L7786
7L7785
7L7784
7L7783
7L7782
7L7781
7L7780
7L7779
7L7778
7L7777
7L7776
7L7775
7L7774
7L7773
7L7772
7L7771
7L7770
7L7769
7L7768
7L7767
7L7766
7L7765
7L7764
7L7763
7L7762
7L7761
7L7760
7L7759
7L7758
7L7757
7L7756
7L7755
7L7754
7L7753
7L7752
7L7751
7L7750
7L7749
7L7748
7L7747
7L7746
7L7745
7L7744
7L7743
7L7742
7L7741
7L7740
7L7739
7L7738
7L7737
7L7736
7L7735
7L7734
7L7733
7L7732
7L7731
7L7730
7L7729
7L7728
7L7727
7L7726
7L7725
7L7724
7L7723
7L7722
7L7721
7L7720
7L7719
7L7718
7L7717
7L7716
7L7715
7L7714
7L7713
7L7712
7L7711
7L7710
7L7709
7L7708
7L7707
7L7706
7L7705
7L7704
7L7703
7L7702
7L7701
7L7700
7L7699
7L7698
7L7697
7L7696
7L7695
7L7694
7L7693
7L7692
7L7691
7L7690
7L7689
7L7688
7L7687
7L7686
7L7685
7L7684
7L7683
7L7682
7L7681
7L7680
7L7679
7L7678
7L7677
7L7676
7L7675
7L7674
7L7673
7L7672
7L7671
7L7670
7L7669
7L7668
7L7667
7L7666
7L7665
7L7664
7L7663
7L7662
7L7661
7L7660
7L7659
7L7658
7L7657
7L7656
7L7655
7L7654
7L7653
7L7652
7L7651
7L7650
7L7649
7L7648
7L7647
7L7646
7L7645
7L7644
7L7643
7L7642
7L7641
7L7640
7L7639
7L7638
7L7637
7L7636
7L7635
7L7634
7L7633
7L7632
7L7631
7L7630
7L7629
7L7628
7L7627
7L7626
7L7625
7L7624
7L7623
7L7622
7L7621
7L7620
7L7619
7L7618
7L7617
7L7616
7L7615
7L7614
7L7613
7L7612
7L7611
7L7610
7L7609
7L7608
7L7607
7L7606
7L7605
7L7604
7L7603
7L7602
7L7601
7L7600
7L7599
7L7598
7L7597
7L7596
7L7595
7L7594
7L7593
7L7592
7L7591
7L7590
7L7589
7L7588
7L7587
7L7586
7L7585
7L7584
7L7583
7L7582
7L7581
7L7580
7L7579
7L7578
7L7577
7L7576
7L7575
7L7574
7L7573
7L7572
7L7571
7L7570
7L7569
7L7568
7L7567
7L7566
7L7565
7L7564
7L7563
7L7562
7L7561
7L7560
7L7559
7L7558
7L7557
7L7556
7L7555
7L7554
7L7553
7L7552
7L7551
7L7550
7L7549
7L7548
7L7547
7L7546
7L7545
7L7544
7L7543
7L7542
7L7541
7L7540
7L7539
7L7538
7L7537
7L7536
7L7535
7L7534
7L7533
7L7532
7L7531
7L7530
7L7529
7L7528
7L7527
7L7526
7L7525
7L7524
7L7523
7L7522
7L7521
7L7520
7L7519
7L7518
7L7517
7L7516
7L7515
7L7514
7L7513
7L7512
7L7511
7L7510
7L7509
7L7508
7L7507
7L7506
7L7505
7L7504
7L7503
7L7502
7L7501
7L7500
7L7499
7L7498
7L7497
7L7496
7L7495
7L7494
7L7493
7L7492
7L7491
7L7490
7L7489
7L7488
7L7487
7L7486
7L7485
7L7484
7L7483
7L7482
7L7481
7L7480
7L7479
7L7478
7L7477
7L7476
7L7475
7L7474
7L7473
7L7472
7L7471
7L7470
7L7469
7L7468
7L7467
7L7466
7L7465
7L7464
7L7463
7L7462
7L7461
7L7460
7L7459
7L7458
7L7457
7L7456
7L7455
7L7454
7L7453
7L7452
7L7451
7L7450
7L7449
7L7448
7L7447
7L7446
7L7445
7L7444
7L7443
7L7442
7L7441
7L7440
7L7439
7L7438
7L7437
7L7436
7L7435
7L7434
7L7433
7L7432
7L7431
7L7430
7L7429
7L7428
7L7427
7L7426
7L7425
7L7424
7L7423
7L7422
7L7421
7L7420
7L7419
7L7418
7L7417
7L7416
7L7415
7L7414
7L7413
7L7412
7L7411
7L7410
7L7409
7L7408
7L7407
7L7406
7L7405
7L7404
7L7403
7L7402
7L7401
7L7400
7L7399
7L7398
7L7397
7L7396
7L7395
7L7394
7L7393
7L7392
7L7391
7L7390
7L7389
7L7388
7L7387
7L7386
7L7385
7L7384
7L7383
7L7382
7L7381
7L7380
7L7379
7L7378
7L7377
7L7376
7L7375
7L7374
7L7373
7L7372
7L7371
7L7370
7L7369
7L7368
7L7367
7L7366
7L7365
7L7364
7L7363
7L7362
7L7361
7L7360
7L7359
7L7358
7L7357
7L7356
7L7355
7L7354
7L7353
7L7352
7L7351
7L7350
7L7349
7L7348
7L7347
7L7346
7L7345
7L7344
7L7343
7L7342
7L7341
7L7340
7L7339
7L7338
7L7337
7L7336
7L7335
7L7334
7L7333
7L7332
7L7331
7L7330
7L7329
7L7328
7L7327
7L7326
7L7325
7L7324
7L7323
7L7322
7L7321
7L7320
7L7319
7L7318
7L7317
7L7316
7L7315
7L7314
7L7313
7L7312
7L7311
7L7310
7L7309
7L7308
7L7307
7L7306
7L7305
7L7304
7L7303
7L7302
7L7301
7L7300
7L7299
7L7298
7L7297
7L7296
7L7295
7L7294
7L7293
7L7292
7L7291
7L7290
7L7289
7L7288
7L7287
7L7286
7L7285
7L7284
7L7283
7L7282
7L7281
7L7280
7L7279
7L7278
7L7277
7L7276
7L7275
7L7274
7L7273
7L7272
7L7271
7L7270
7L7269
7L7268
7L7267
7L7266
7L7265
7L7264
7L7263
7L7262
7L7261
7L7260
7L7259
7L7258
7L7257
7L7256
7L7255
7L7254
7L7253
7L7252
7L7251
7L7250
7L7249
7L7248
7L7247
7L7246
7L7245
7L7244
7L7243
7L7242
7L7241
7L7240
7L7239
7L7238
7L7237
7L7236
7L7235
7L7234
7L7233
7L7232
7L7231
7L7230
7L7229
7L7228
7L7227
7L7226
7L7225
7L7224
7L7223
7L7222
7L7221
7L7220
7L7219
7L7218
7L7217
7L7216
7L7215
7L7214
7L7213
7L7212
7L7211
7L7210
7L7209
7L7208
7L7207
7L7206
7L7205
7L7204
7L7203
7L7202
7L7201
7L7200
7L7199
7L7198
7L7197
7L7196
7L7195
7L7194
7L7193
7L7192
7L7191
7L7190
7L7189
7L7188
7L7187
7L7186
7L7185
7L7184
7L7183
7L7182
7L7181
7L7180
7L7179
7L7178
7L7177
7L7176
7L7175
7L7174
7L7173
7L7172
7L7171
7L7170
7L7169
7L7168
7L7167
7L7166
7L7165
7L7164
7L7163
7L7162
7L7161
7L7160
7L7159
7L7158
7L7157
7L7156
7L7155
7L7154
7L7153
7L7152
7L7151
7L7150
7L7149
7L7148
7L7147
7L7146
7L7145
7L7144
7L7143
7L7142
7L7141
7L7140
7L7139
7L7138
7L7137
7L7136
7L7135
7L7134
7L7133
7L7132
7L7131
7L7130
7L7129
7L7128
7L7127
7L7126
7L7125
7L7124
7L7123
7L7122
7L7121
7L7120
7L7119
7L7118
7L7117
7L7116
7L7115
7L7114
7L7113
7L7112
7L7111
7L7110
7L7109
7L7108
7L7107
7L7106
7L7105
7L7104
7L7103
7L7102
7L7101
7L7100
7L7099
7L7098
7L7097
7L7096
7L7095
7L7094
7L7093
7L7092
7L7091
7L7090
7L7089
7L7088
7L7087
7L7086
7L7085
7L7084
7L7083
7L7082
7L7081
7L7080
7L7079
7L7078
7L7077
7L7076
7L7075
7L7074
7L7073
7L7072
7L7071
7L7070
7L7069
7L7068
7L7067
7L7066
7L7065
7L7064
7L7063
7L7062
7L7061
7L7060
7L7059
7L7058
7L7057
7L7056
7L7055
7L7054
7L7053
7L7052
7L7051
7L7050
7L7049
7L7048
7L7047
7L7046
7L7045
7L7044
7L7043
7L7042
7L7041
7L7040
7L7039
7L7038
7L7037
7L7036
7L7035
7L7034
7L7033
7L7032
7L7031
7L7030
7L7029
7L7028
7L7027
7L7026
7L7025
7L7024
7L7023
7L7022
7L7021
7L7020
7L7019
7L7018
7L7017
7L7016
7L7015
7L7014
7L7013
7L7012
7L7011
7L7010
7L7009
7L7008
7L7007
7L7006
7L7005
7L7004
7L7003
7L7002
7L7001
7L7000
7L6999
7L6998
7L6997
7L6996
7L6995
7

Figure A2-7: 2019 Summer Light Pre-Project Case B - N-0 (System Normal Condition)

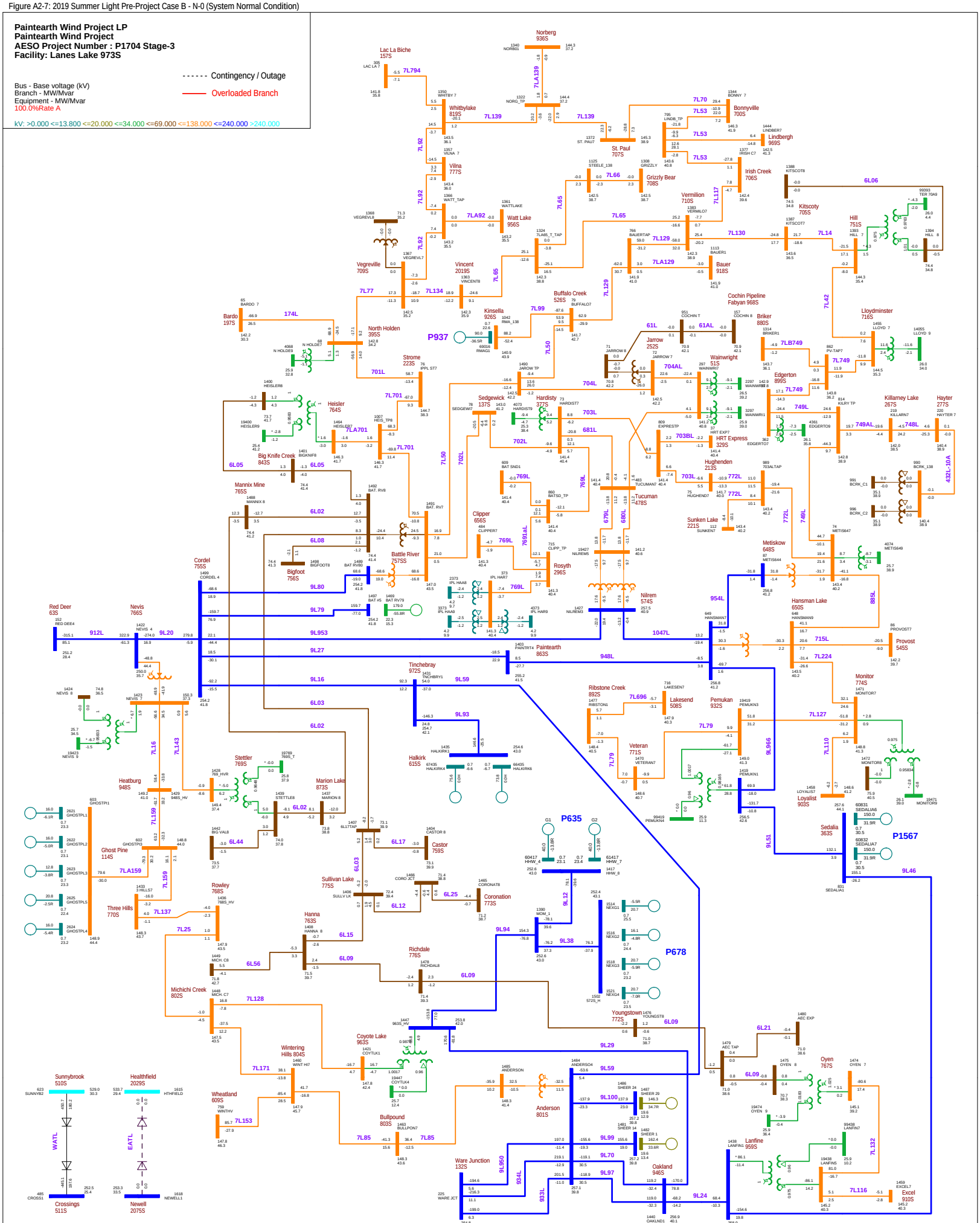
Paintearth Wind Project LP
Paintearth Wind Project
AESO Project Number : P1704 Stage-3
Facility: Lanes Lake 973S
Contingency / Outage
Overloaded Branch
Bus - Base voltage (kV)
Branch - MW/Mvar
Equipment - MW/Mvar
100.0%Rate A
kV: >0.000 <=13.800 <=20.000 <=34.000 <=69.000 <=138.000 <=240.000 >240.000
Norberg 936S
Lac La Biche 157S
Whitbylake 819S
Vilna 777S
Watt Lake 956S
Vegreville 709S
Vincent 2019S
Kinsella 926S
Buffalo Creek 526S
Bardo 197S
North Holden 395S
P937
Strome 223S
Heisler 764S
Big Knife Creek 843S
Mannix Mine 765S
Cordel 755S
Bigfoot 756S
Battle River 757SS
Clipper 656S
Sedgewick 137S
Hardisty 377S
Jarrow 252S
Wainwright 51S
Vermilion 710S
St. Paul 707S
Grizzly Bear 708S
Bonnyville 700S
Lindbergh 969S
Irish Creek 706S
Kitscoty 705S
Hill 751S
Lloydminster 716S
Cochin Pipeline Fabyan 968S
Briker 880S
Edgerton 899S
HRT Express 329S
Killarney Lake 267S
Hayter 277S
Hughenden 213S
Tucuman 478S
Sunken Lake 221S
Metiskow 648S
Hansman Lake 650S
Provost 545S
Monitor 774S
Lakesend 508S
Pemukan 932S
Ribstone Creek 892S
Veteran 771S
Loyalist 903S
Sedalia 363S
P1567
Paintearth 863S
Nilrem 574S
Rosyth 296S
Tinchebray 972S
Halkirk 615S
Stettler 769S
Heatburg 948S
Marion Lake 873S
Castor 759S
Coronation 773S
Sullivan Lake 775S
Hanna 763S
Richdale 776S
Rowley 768S
Three Hills 770S
Ghost Pine 114S
Michichi Creek 802S
Wintering Hills 804S
Coyote Lake 963S
Wheatland 609S
Bullpound 803S
Anderson 801S
Ware Junction 132S
Oakland 946S
Youngstown 772S
Lanfine 959S
Oyen 767S
Excel 910S
Sunnybrook 510S
Crossings 511S
Healthfield 2029S
Newell 2075S
P635
P678
912L
9L20
9L953
9L27
9L16
9L59
9L79
9L80
9L93
9L94
9L38
9L12
9L29
9L59
9L100
9L99
9L70
9L97
9L24
9L950
934L
933L
1047L
954L
948L
715L
7L224
7L127
7L110
9L966
9L51
885L
7L42
7L14
7L06
7L130
7L129
7L65
7L66
7L53
7L70
7L139
7L92
7L93
7L50
7L99
7L77
7L134
7L65
7L117
7L92
7L92
7L92

Figure A2-8: 2019 Summer Light Pre-Project Case B - Contingency of 9L29 (Oakland 946S - Coyote Lake 963S)

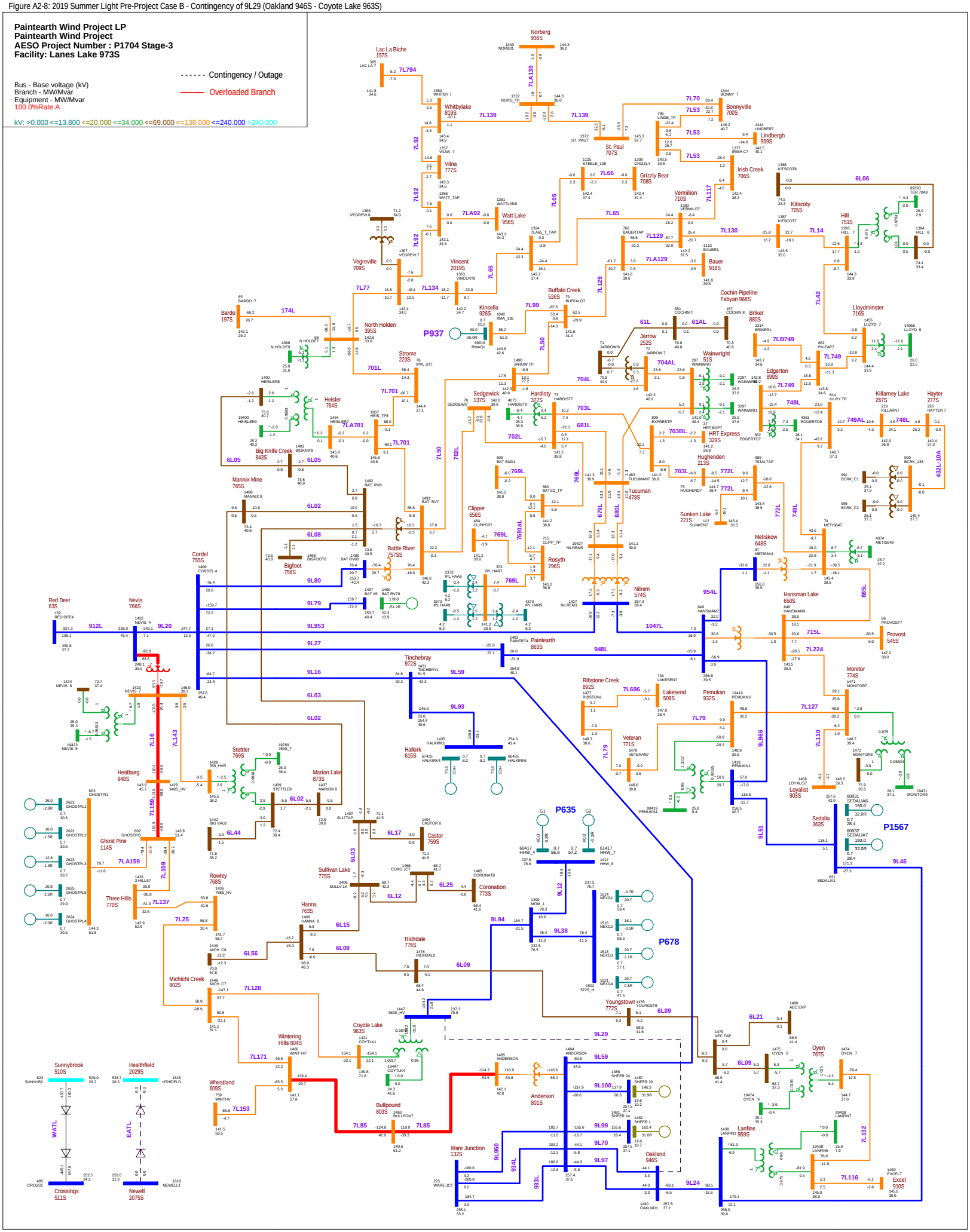
Paintearth Wind Project LP
Paintearth Wind Project
AESO Project Number : P1704 Stage-3
Facility: Lanes Lake 973S
Contingency / Outage
Overloaded Branch
Bus - Base voltage (kV)
Branch - MW/Mvar
Equipment - MW/Mvar
100.0%Rate A
kV: >0.000 <=13.800 <=20.000 <=34.000 <=69.000 <=138.000 <=240.000 >240.000
Norberg 936S
Lac La Biche 157S
Whitbylake 819S
Vilna 777S
Vegreville 709S
Vincent 2019S
Watt Lake 956S
St. Paul 707S
Bonnyville 700S
Lindbergh 969S
Irish Creek 706S
Kitscoty 705S
Grizzly Bear 708S
Vermilion 710S
Bauer 918S
Hill 751S
Lloydminster 716S
Cochin Pipeline
Fabyan 968S
Briker 880S
Wainwright 51S
Edgerton 899S
Killarney Lake 267S
Hayter 277S
Jarrow 252S
Buffalo Creek 526S
Kinsella 926S
Sedgewick 137S
Hardisty 377S
HRT Express 329S
Hughenden 213S
Sunken Lake 221S
Tucumar 478S
Bardo 197S
North Holden 395S
Strome 223S
Heisler 764S
Big Knife Creek 843S
Mannix Mine 765S
Cordel 755S
Bigfoot 756S
Battle River 757SS
Clipper 656S
Rosyth 296S
Nilrem 574S
Metiskow 648S
Hansman Lake 650S
Provost 545S
Red Deer 63S
Nevis 766S
Heatburg 948S
Ghost Pine 114S
Three Hills 770S
Rowley 768S
Michichi Creek 802S
Stettler 769S
Marion Lake 873S
Tinchebray 972S
Halkirk 615S
Castor 759S
Coronation 773S
Sullivan Lake 775S
Hanna 763S
Richdale 776S
Paintearth 863S
Ribstone Creek 892S
Lakesend 508S
Veteran 771S
Pemukan 932S
Monitor 774S
Loyalist 903S
Sedalia 363S
Youngstown 772S
Oyen 767S
Lanfine 959S
Excel 910S
Sunnybrook 510S
Healthfield 2029S
Crossings 511S
Newell 2075S
Wheatland 609S
Wintering Hills 804S
Coyote Lake 963S
Bullpound 803S
Anderson 801S
Ware Junction 132S
Oakland 946S
Kitscoty 705S
Tucumar 478S
P937
P635
P678
P1567
174L
701L
6L05
6L02
6L08
9L80
9L79
9L20
912L
9L953
9L27
9L16
6L03
9L59
9L93
6L17
6L44
6L02
6L12
6L25
6L15
6L09
6L56
7L25
7L128
7L171
7L153
7L85
9L94
9L38
9L12
9L100
9L99
9L70
9L97
9L24
9L29
6L21
6L09
7L132
7L116
7L14
6L06
7L42
7L749
7L749A
7L748
7L749
7L127
7L110
7L79
7L696
7L224
715L
948L
1047L
954L
885L
772L
749L
432L-10A
7L50
7L65
7L92
7L66
7L129
7L130
7L117
7L99
7L701
7L702
7L703
7L704
7L704AL
7L703AL
7L61
7L61AL
7L7B749
7L7B749
7L7B749

Figure A2-9: 2019 Summer Light Pre-Project Case B - Contingency of 912L\9L912 (Red Deer 63S - Nevis 766S)

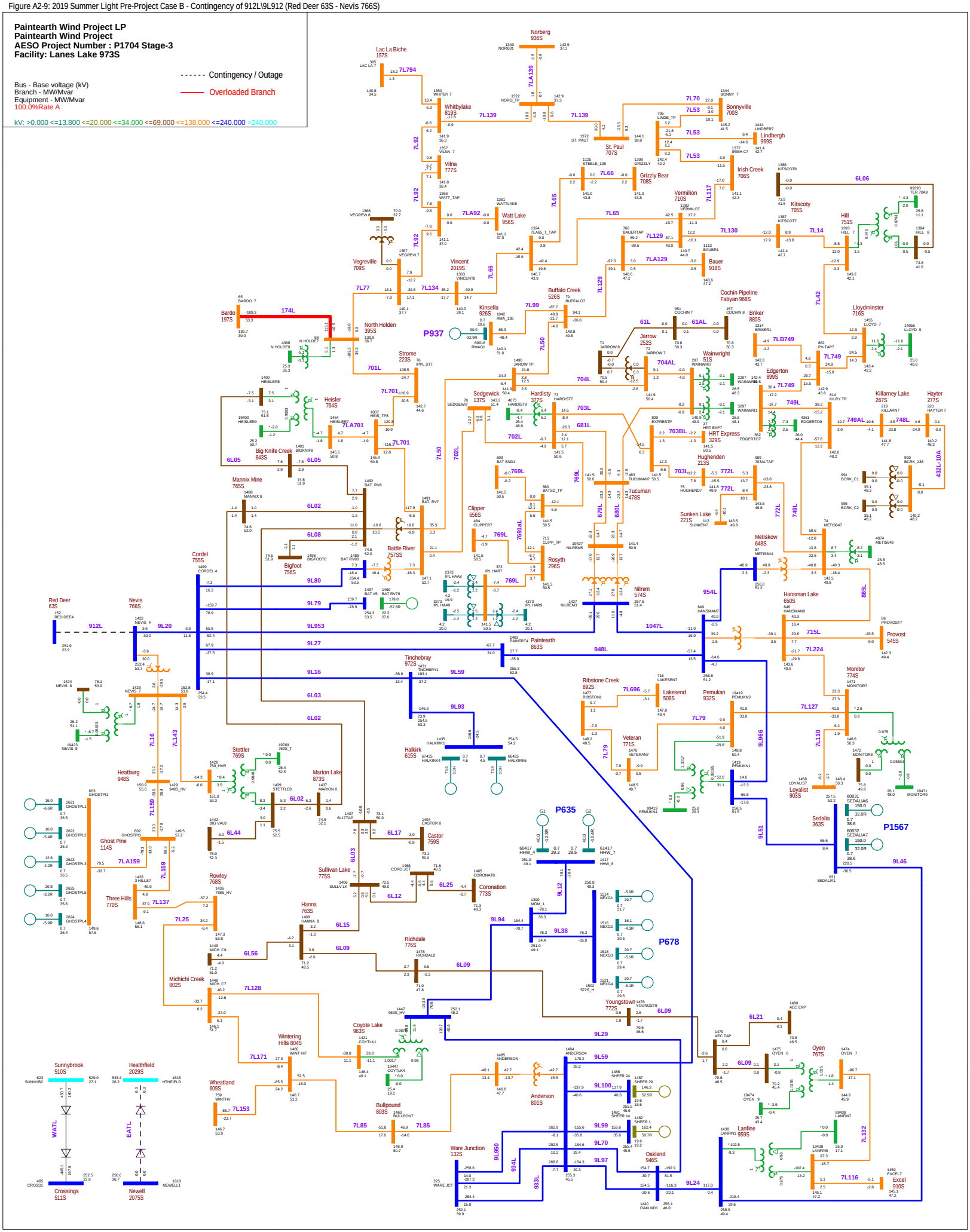

Figure A2-10: 2019 Summer Light Pre-Project Case B - Contingency of 648ST1 (Metiskow 648S Transformer T1)

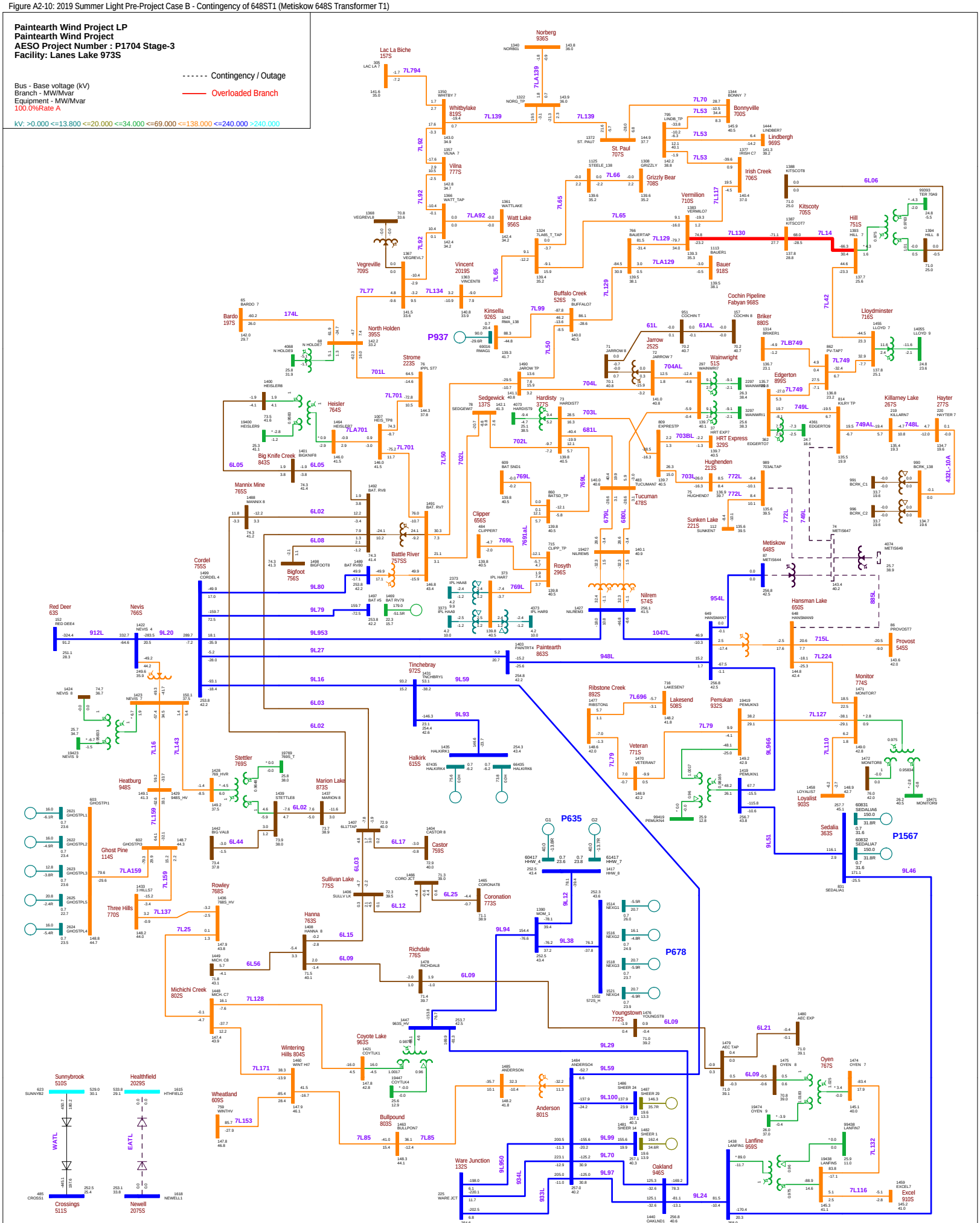

Figure A2-11: 2019 Summer Light Pre-Project Case B - Contingency of 766S901T (Nevis 766S Transformer 901T)

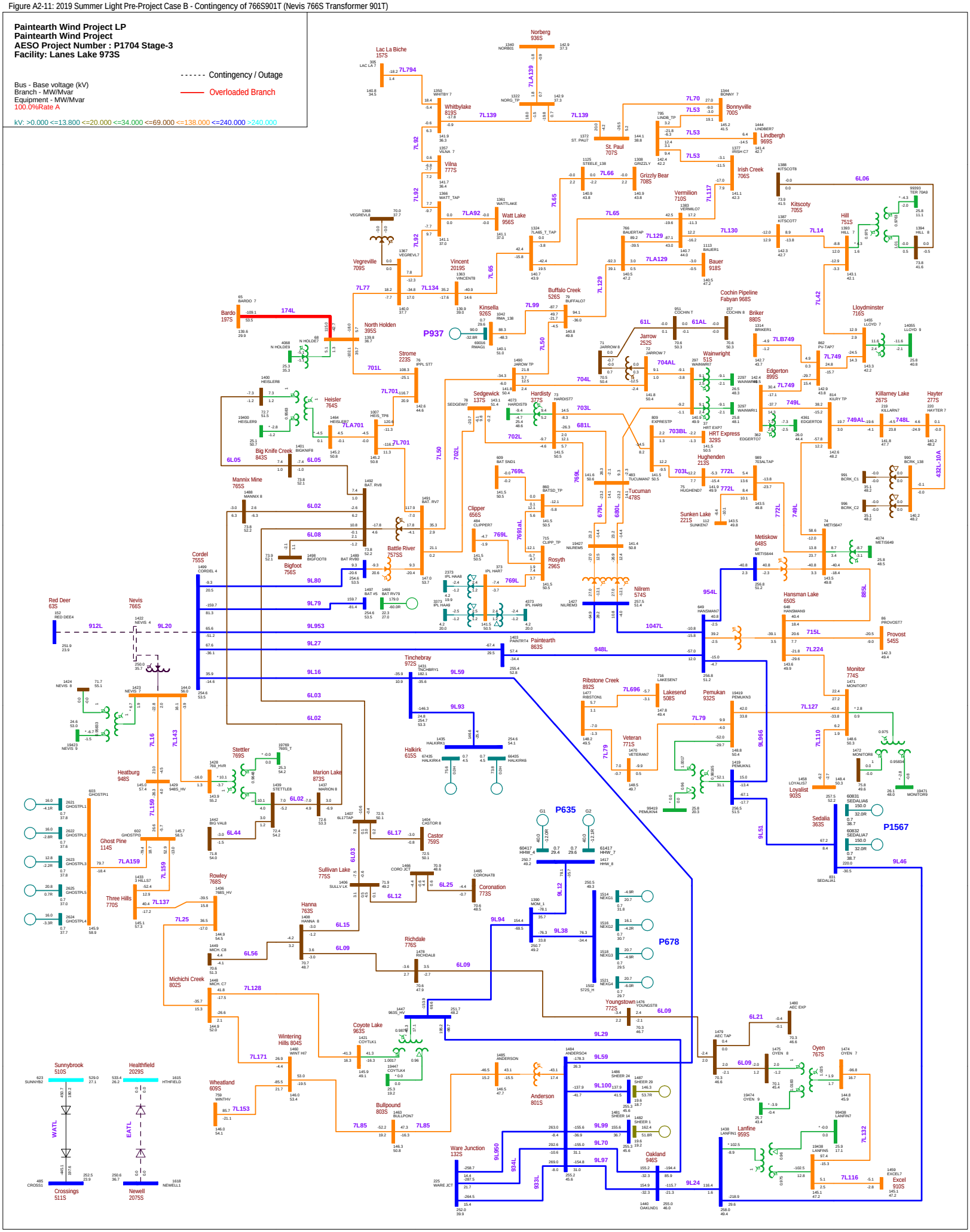

Figure A2-12: 2019 Summer Light Pre-Project Case B - Contingency of 9L20 (Nevis 766S - Cordel 755S)

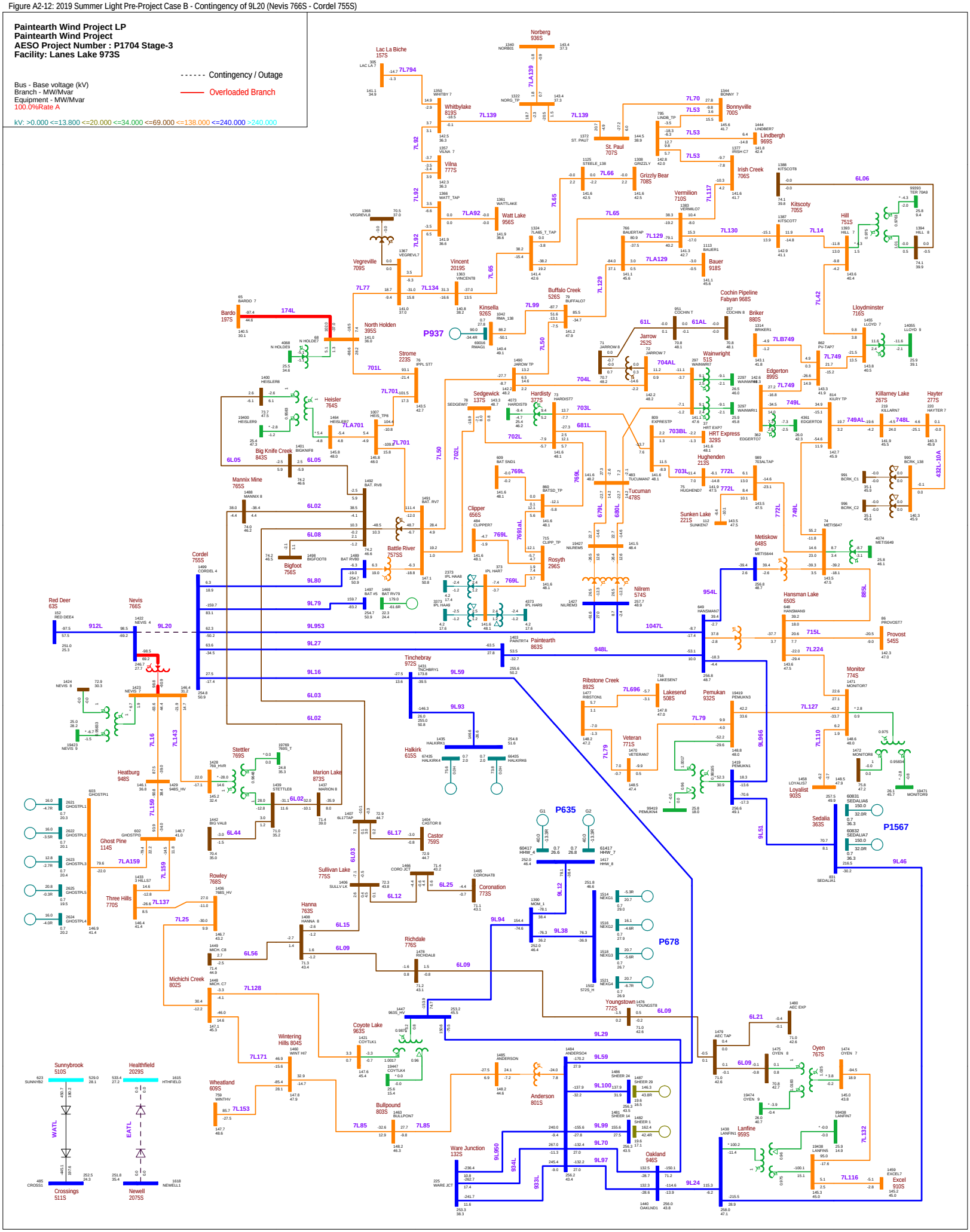
Paintearth Wind Project LP
Paintearth Wind Project
AESO Project Number : P1704 Stage-3
Facility: Lanes Lake 973S
Contingency / Outage
Overloaded Branch
Bus - Base voltage (kV)
Branch - MW/Mvar
Equipment - MW/Mvar
100.0%Rate A
kV: >0.000 <=13.800 <=20.000 <=34.000 <=69.000 <=138.000 <=240.000 >240.000
Norberg 936S
Lac La Biche 157S
Whitbylake 819S
Vilna 777S
Vegreville 709S
Vincent 2019S
Watt Lake 956S
St. Paul 707S
Bonnyville 700S
Lindbergh 969S
Irish Creek 706S
Grizzly Bear 708S
Vermilion 710S
Kitscoty 705S
Hill 751S
Bauer 918S
Buffalo Creek 526S
Kinsella 926S
Bardo 197S
North Holden 395S
Strome 223S
Heisler 764S
Big Knife Creek 843S
Mannix Mine 765S
Bigfoot 756S
Battle River 757SS
Sedgewick 137S
Hardisty 377S
Clipper 656S
Rosyth 296S
Tucuman 478S
Sunken Lake 221S
Hughenden 213S
HRT Express 329S
Jarrow 252S
Wainwright 51S
Edgerton 899S
Briker 880S
Lloydminster 716S
Killarney Lake 267S
Hayter 277S
Cochin Pipeline Fabyan 968S
Nilrem 574S
Metiskow 648S
Hansman Lake 650S
Provost 545S
Cordel 755S
Red Deer 63S
Nevis 766S
Paintearth 863S
Tinchebray 972S
Ribstone Creek 892S
Lakesend 508S
Pemukan 932S
Veteran 771S
Monitor 774S
Loyalist 903S
Sedalia 363S
Halkirk 615S
Stettler 769S
Heatburg 948S
Marion Lake 873S
Ghost Pine 114S
Three Hills 770S
Rowley 768S
Hanna 763S
Sullivan Lake 775S
Castor 759S
Coronation 773S
Richdale 776S
Michichi Creek 802S
Youngstown 772S
Oyen 767S
Lanfine 959S
Excel 910S
Sunnybrook 510S
Healthfield 2029S
Crossings 511S
Newell 2075S
Wheatland 609S
Wintering Hills 804S
Coyote Lake 963S
Bullpound 803S
Anderson 801S
Ware Junction 132S
Oakland 946S
P937
P635
P678
P1567
174L
7L794
7L139
7L92
7L93
7L65
7L66
7L70
7L53
7L117
7L130
7L14
6L06
7L77
7L134
7L65
7L129
7LA129
7L42
7L99
7L50
7L701
7LA701
7L702
7L703
7L704
7L704AL
61L
61AL
7LB749
7L749
749L
749AL
748L
432L-10A
6L05
6L08
6L02
9L80
9L79
912L
9L20
9L953
9L27
9L16
9L59
9L93
6L03
7L16
7L143
7L159
7LA159
7L169
6L02
6L44
6L17
6L25
6L12
6L15
6L09
6L56
7L25
7L128
7L137
7L171
7L153
7L85
9L94
9L38
9L12
9L100
9L99
9L70
9L97
9L24
9L950
934L
933L
7L132
7L116
6L21
9L29
7LA92
7LA139
7LA701
7LA92
7L110
7L127
7L224
715L
948L
1047L
954L
885L
9L51
9L966
7L696
7L79
7L749
7L748
7L722
772L
769L
769AL
680L
679L
703BL
703L
702L
681L
6L69
6L70
6L71
6L72
6L73
6L74
6L75
6L76
6L77
6L78
6L79
6L80
6L81
6L82
6L83
6L84
6L85
6L86
6L87
6L88
6L89
6L90
6L91
6L92
6L93
6L94
6L95
6L96
6L97
6L98
6L99
6L100
6L101
6L102
6L103
6L104
6L105
6L106
6L107
6L108
6L109
6L110
6L111
6L112
6L113
6L114
6L115
6L116
6L117
6L118
6L119
6L120
6L121
6L122
6L123
6L124
6L125
6L126
6L127
6L128
6L129
6L130
6L131
6L132
6L133
6L134
6L135
6L136
6L137
6L138
6L139
6L140
6L141
6L142
6L143
6L144
6L145
6L146
6L147
6L148
6L149
6L150
6L151
6L152
6L153
6L154
6L155
6L156
6L157
6L158
6L159
6L160
6L161
6L162
6L163
6L164
6L165
6L166
6L167
6L168
6L169
6L170
6L171
6L172
6L173
6L174
6L175
6L176
6L177
6L178
6L179
6L180
6L181
6L182
6L183
6L184
6L185
6L186
6L187
6L188
6L189
6L190
6L191
6L192
6L193
6L194
6L195
6L196
6L197
6L198
6L199
6L200
6L201
6L202
6L203
6L204
6L205
6L206
6L207
6L208
6L209
6L210
6L211
6L212
6L213
6L214
6L215
6L216
6L217
6L218
6L219
6L220
6L221
6L222
6L223
6L224
6L225
6L226
6L227
6L228
6L229
6L230
6L231
6L232
6L233
6L234
6L235
6L236
6L237
6L238
6L239
6L240
6L241
6L242
6L243
6L244
6L245
6L246
6L247
6L248
6L249
6L250
6L251
6L252
6L253
6L254
6L255
6L256
6L257
6L258
6L259
6L260
6L261
6L262
6L263
6L264
6L265
6L266
6L267
6L268
6L269
6L270
6L271
6L272
6L273
6L274
6L275
6L276
6L277
6L278
6L279
6L280
6L281
6L282
6L283
6L284
6L285
6L286
6L287
6L288
6L289
6L290
6L291
6L292
6L293
6L294
6L295
6L296
6L297
6L298
6L299
6L300
6L301
6L302
6L303
6L304
6L305
6L306
6L307
6L308
6L309
6L310
6L311
6L312
6L313
6L314
6L315
6L316
6L317
6L318
6L319
6L320
6L321
6L322
6L323
6L324
6L325
6L326
6L327
6L328
6L329
6L330
6L331
6L332
6L333
6L334
6L335
6L336
6L337
6L338
6L339
6L340
6L341
6L342
6L343
6L344
6L345
6L346
6L347
6L348
6L349
6L350
6L351
6L352
6L353
6L354
6L355
6L356
6L357
6L358
6L359
6L360
6L361
6L362
6L363
6L364
6L365
6L366
6L367
6L368
6L369
6L370
6L371
6L372
6L373
6L374
6L375
6L376
6L377
6L378
6L379
6L380
6L381
6L382
6L383
6L384
6L385
6L386
6L387
6L388
6L389
6L390
6L391
6L392
6L393
6L394
6L395
6L396
6L397
6L398
6L399
6L400
6L401
6L402
6L403
6L404
6L405
6L406
6L407
6L408
6L409
6L410
6L411
6L412
6L413
6L414
6L415
6L416
6L417
6L418
6L419
6L420
6L421
6L422
6L423
6L424
6L425
6L426
6L427
6L428
6L429
6L430
6L431
6L432
6L433
6L434
6L435
6L436
6L437
6L438
6L439
6L440
6L441
6L442
6L443
6L444
6L445
6L446
6L447
6L448
6L449
6L450
6L451
6L452
6L453
6L454
6L455
6L456
6L457
6L458
6L459
6L460
6L461
6L462
6L463
6L464
6L465
6L466
6L467
6L468
6L469
6L470
6L471
6L472
6L473
6L474
6L475
6L476
6L477
6L478
6L479
6L480
6L481
6L482
6L483
6L484
6L485
6L486
6L487
6L488
6L489
6L490
6L491
6L492
6L493
6L494
6L495
6L496
6L497
6L498
6L499
6L500
6L501
6L502
6L503
6L504
6L505
6L506
6L507
6L508
6L509
6L510
6L511
6L512
6L513
6L514
6L515
6L516
6L517
6L518
6L519
6L520
6L521
6L522
6L523
6L524
6L525
6L526
6L527
6L528
6L529
6L530
6L531
6L532
6L533
6L534
6L535
6L536
6L537
6L538
6L539
6L540
6L541
6L542
6L543
6L544
6L545
6L546
6L547
6L548
6L549
6L550
6L551
6L552
6L553
6L554
6L555
6L556
6L557
6L558
6L559
6L560
6L561
6L562
6L563
6L564
6L565
6L566
6L567
6L568
6L569
6L570
6L571
6L572
6L573
6L574
6L575
6L576
6L577
6L578
6L579
6L580
6L581
6L582
6L583
6L584
6L585
6L586
6L587
6L588
6L589
6L590
6L591
6L592
6L593
6L594
6L595
6L596
6L597
6L598
6L599
6L600
6L601
6L602
6L603
6L604
6L605
6L606
6L607
6L608
6L609
6L610
6L611
6L612
6L613
6L614
6L615
6L616
6L617
6L618
6L619
6L620
6L621
6L622
6L623
6L624
6L625
6L626
6L627
6L628
6L629
6L630
6L631
6L632
6L633
6L634
6L635
6L636
6L637
6L638
6L639
6L640
6L641
6L642
6L643
6L644
6L645
6L646
6L647
6L648
6L649
6L650
6L651
6L652
6L653
6L654
6L655
6L656
6L657
6L658
6L659
6L660
6L661
6L662
6L663
6L664
6L665
6L666
6L667
6L668
6L669
6L670
6L671
6L672
6L673
6L674
6L675
6L676
6L677
6L678
6L679
6L680
6L681
6L682
6L683
6L684
6L685
6L686
6L687
6L688
6L689
6L690
6L691
6L692
6L693
6L694
6L695
6L696
6L697
6L698
6L699
6L700
6L701
6L702
6L703
6L704
6L705
6L706
6L707
6L708
6L709
6L710
6L711
6L712
6L713
6L714
6L715
6L716
6L717
6L718
6L719
6L720
6L721
6L722
6L723
6L724
6L725
6L726
6L727
6L728
6L729
6L730
6L731
6L732
6L733
6L734
6L735
6L736
6L737
6L738
6L739
6L740
6L741
6L742
6L743
6L744
6L745
6L746
6L747
6L748
6L749
6L750
6L751
6L752
6L753
6L754
6L755
6L756
6L757
6L758
6L759
6L760
6L761
6L762
6L763
6L764
6L765
6L766
6L767
6L768
6L769
6L770
6L771
6L772
6L773
6L774
6L775
6L776
6L777
6L778
6L779
6L780
6L781
6L782
6L783
6L784
6L785
6L786
6L787
6L788
6L789
6L790
6L791
6L792
6L793
6L794
6L795
6L796
6L797
6L798
6L799
6L800
6L801
6L802
6L803
6L804
6L805
6L806
6L807
6L808
6L809
6L810
6L811
6L812
6L813
6L814
6L815
6L816
6L817
6L818
6L819
6L820
6L821
6L822
6L823
6L824
6L825
6L826
6L827
6L828
6L829
6L830
6L831
6L832
6L833
6L834
6L835
6L836
6L837
6L838
6L839
6L840
6L841
6L842
6L843
6L844
6L845
6L846
6L847
6L848
6L849
6L850
6L851
6L852
6L853
6L854
6L855
6L856
6L857
6L858
6L859
6L860
6L861
6L862
6L863
6L864
6L865
6L866
6L867
6L868
6L869
6L870
6L871
6L872
6L873
6L874
6L875
6L876
6L877
6L878
6L879
6L880
6L881
6L882
6L883
6L884
6L885
6L886
6L887
6L888
6L889
6L890
6L891
6L892
6L893
6L894
6L895
6L896
6L897
6L898
6L899
6L900
6L901
6L902
6L903
6L904
6L905
6L906
6L907
6L908
6L909
6L910
6L911
6L912
6L913
6L914
6L915
6L916
6L917
6L918
6L919
6L920
6L921
6L922
6L923
6L924
6L925
6L926
6L927
6L928
6L929
6L930
6L931
6L932
6L933
6L934
6L935
6L936
6L937
6L938
6L939
6L940
6L941
6L942
6L943
6L944
6L945
6L946
6L947
6L948
6L949
6L950
6L951
6L952
6L953
6L954
6L955
6L956
6L957
6L958
6L959
6L960
6L961
6L962
6L963
6L964
6L965
6L966
6L967
6L968
6L969
6L970
6L971
6L972
6L973
6L974
6L975
6L976
6L977
6L978
6L979
6L980
6L981
6L982
6L983
6L984
6L985
6L986
6L987
6L988
6L989
6L990
6L991
6L992
6L993
6L994
6L995
6L996
6L997
6L998
6L999
6L1000
6L1001
6L1002
6L1003
6L1004
6L1005
6L1006
6L1007
6L1008
6L1009
6L1010
6L1011
6L1012
6L1013
6L1014
6L1015
6L1016
6L1017
6L1018
6L1019
6L1020
6L1021
6L1022
6L1023
6L1024
6L1025
6L1026
6L1027
6L1028
6L1029
6L1030
6L1031
6L1032
6L1033
6L1034
6L1035
6L1036
6L1037
6L1038
6L1039
6L1040
6L1041
6L1042
6L1043
6L1044
6L1045
6L1046
6L1047
6L1048
6L1049
6L1050
6L1051
6L1052
6L1053
6L1054
6L1055
6L1056
6L1057
6L1058
6L1059
6L1060
6L1061
6L1062
6L1063
6L1064
6L1065
6L1066
6L1067
6L1068
6L1069
6L1070
6L1071
6L1072
6L1073
6L1074
6L1075
6L1076
6L1077
6L1078
6L1079
6L1080
6L1081
6L1082
6L1083
6L1084
6L1085
6L1086
6L1087
6L1088
6L1089
6L1090
6L1091
6L1092
6L1093
6L1094
6L1095
6L1096
6L1097
6L1098
6L1099
6L1100
6L1101
6L1102
6L1103
6L1104
6L1105
6L1106
6L1107
6L1108
6L1109
6L1110
6L1111
6L1112
6L1113
6L1114
6L1115
6L1116
6L1117
6L1118
6L1119
6L1120
6L1121
6L1122
6L1123
6L1124
6L1125
6L1126
6L1127
6L1128
6L1129
6L1130
6L1131
6L1132
6L1133
6L1134
6L1135
6L1136
6L1137
6L1138
6L1139
6L1140
6L1141
6L1142
6L1143
6L1144
6L1145
6L1146
6L1147
6L1148
6L1149
6L1150
6L1151
6L1152
6L1153
6L1154
6L1155
6L1156
6L1157
6L1158
6L1159
6L1160
6L1161
6L1162
6L1163
6L1164
6L1165
6L1166
6L1167
6L1168
6L1169
6L1170
6L1171
6L1172
6L1173
6L1174
6L1175
6L1176
6L1177
6L1178
6L1179
6L1180
6L1181
6L1182
6L1183
6L1184
6L1185
6L1186
6L1187
6L1188
6L1189
6L1190
6L1191
6L1192
6L1193
6L1194
6L1195
6L1196
6L1197
6L1198
6L1199
6L1200
6L1201
6L1202
6L1203
6L1204
6L1205
6L1206
6L1207
6L1208
6L1209
6L1210
6L1211
6L1212
6L1213
6L1214
6L1215
6L1216
6L1217
6L1218
6L1219
6L1220
6L1221
6L1222
6L1223
6L1224
6L1225
6L1226
6L1227
6L1228
6L1229
6L1230
6L1231
6L1232
6L1233
6L1234
6L1235
6L1236
6L1237
6L1238
6L1239
6L1240
6L1241
6L1242
6L1243
6L1244
6L1245
6L1246
6L1247
6L1248
6L1249
6L1250
6L1251
6L1252
6L1253
6L1254
6L1255
6L1256
6L1257
6L1258
6L1259
6L1260
6L1261
6L1262
6L1263
6L1264
6L1265
6L1266
6L1267
6L1268
6L1269
6L1270
6L1271
6L1272
6L1273
6L1274
6L1275
6L1276
6L1277
6L1278
6L1279
6L1280
6L1281
6L1282
6L1283
6L1284
6L1285
6L1286
6L1287
6L1288
6L1289
6L1290
6L1291
6L1292
6L1293
6L1294
6L1295
6L1296
6L1297
6L1298
6L1299
6L1300
6L1301
6L1302
6L1303
6L1304
6L1305
6L1306
6L1307
6L1308
6L1309
6L1310
6L1311
6L1312
6L1313
6L1314
6L1315
6L1316
6L1317
6L1318
6L1319
6L1320
6L1321
6L1322
6L1323
6L1324
6L1325
6L1326
6L1327
6L1328
6L1329
6L1330
6L1331
6L1332
6L1333
6L1334
6L1335
6L1336
6L1337
6L1338
6L1339
6L1340
6L1341
6L1342
6L1343
6L1344
6L1345
6L1346
6L1347
6L1348
6L1349
6L1350
6L1351
6L1352
6L1353
6L1354
6L1355
6L1356
6L1357
6L1358
6L1359
6L1360
6L1361
6L1362
6L1363
6L1364
6L1365
6L1366
6L1367
6L1368
6L1369
6L1370
6L1371
6L1372
6L1373
6L1374
6L1375
6L1376
6L1377
6L1378
6L1379
6L1380
6L1381
6L1382
6L1383
6L1384
6L1385
6L1386
6L1387
6L1388
6L1389
6L1390
6L1391
6L1392
6L1393
6L1394
6L1395
6L1396
6L1397
6L1398
6L1399
6L1400
6L1401
6L1402
6L1403
6L1404
6L1405
6L1406
6L1407
6L1408
6L1409
6L1410
6L1411
6L1412
6L1413
6L1414
6L1415
6L1416
6L1417
6L1418
6L1419
6L1420
6L1421
6L1422
6L1423
6L1424
6L1425
6L1426
6L1427
6L1428
6L1429
6L1430
6L1431
6L1432
6L1433
6L1434
6L1435
6L1436
6L1437
6L1438
6L1439
6L1440
6L1441
6L1442
6L1443
6L1444
6L1445
6L1446
6L1447
6L1448
6L1449
6L1450
6L1451
6L1452
6L1453
6L1454
6L1455
6L1456
6L1457
6L1458
6L1459
6L1460
6L1461
6L1462
6L1463
6L1464
6L1465
6L1466
6L1467
6L1468
6L1469
6L1470
6L1471
6L1472
6L1473
6L1474
6L1475
6L1476
6L1477
6L1478
6L1479
6L1480
6L1481
6L1482
6L1483
6L1484
6L1485
6L1486
6L1487
6L1488
6L1489
6L1490
6L1491
6L1492
6L1493
6L1494
6L1495
6L1496
6L1497
6L1498
6L1499
6L1500
6L1501
6L1502
6L1503
6L1504
6L1505
6L1506
6L1507
6L1508
6L1509
6L1510
6L1511
6L1512
6L1513
6L1514
6L1515
6L1516
6L1517
6L1518
6L1519
6L1520
6L1521
6L1522
6L1523
6L1524
6L1525
6L1526
6L1527
6L1528
6L1529
6L1530
6L1531
6L1532
6L1533
6L1534
6L1535
6L1536
6L1537
6L1538
6L1539
6L1540
6L1541
6L1542
6L1543
6L1544
6L1545
6L1546
6L1547
6L1548
6L1549
6L1550
6L1551
6L1552
6L1553
6L1554
6L1555
6L1556
6L1557
6L1558
6L1559
6L1560
6L1561
6L1562
6L1563
6L1564
6L1565
6L1566
6L1567
6L1568
6L1569
6L1570
6L1571
6L1572
6L1573
6L1574
6L1575
6L1576
6L1577
6L1578
6L1579
6L1580
6L1581
6L1582
6L1583
6L1584
6L1585
6L1586
6L1587
6L1588
6L1589
6L1590
6L1591
6L1592
6L1593
6L1594
6L1595
6L1596
6L1597
6L1598
6L1599
6L1600
6L1601
6L1602
6L1603
6L1604
6L1605
6L1606
6L1607
6L1608
6L1609
6L1610
6L1611
6L1612
6L1613
6L1614
6L1615
6L1616
6L1617
6L1618
6L1619
6L1620
6L1621
6L1622
6L1623
6L1624
6L1625
6L1626
6L1627
6L1628
6L1629
6L1630
6L1631
6L1632
6L1633
6L1634
6L1635
6L1636
6L1637
6L1638
6L1639
6L1640
6L1641
6L1642
6L1643
6L1644
6L1645
6L1646
6L1647
6L1648
6L1649
6L1650
6L1651
6L1652
6L1653
6L1654
6L1655
6L1656
6L1657
6L1658
6L1659
6L1660
6L1661
6L1662
6L1663
6L1664
6L1665
6L1666
6L1667
6L1668
6L1669
6L1670
6L1671
6L1672
6L1673
6L1674
6L1675
6L1676
6L1677
6L1678
6L1679
6L1680
6L1681
6L1682
6L1683
6L1684
6L1685
6L1686
6L1687
6L1688
6L1689
6L1690
6L1691
6L1692
6L1693
6L1694
6L1695
6L1696
6L1697
6L1698
6L1699
6L1700
6L1701
6L1702
6L1703
6L1704
6L1705
6L1706
6L1707
6L1708
6L1709
6L1710
6L1711
6L1712
6L1713
6L1714
6L1715
6L1716
6L1717
6L1718
6L1719
6L1720
6L1721
6L1722
6L1723
6L1724
6L1725
6L1726
6L1727
6L1728
6L1729
6L1730
6L1731
6L1732
6L1733
6L1734
6L1735
6L1736
6L1737
6L1738
6L1739
6L1740
6L1741
6L1742
6L1743
6L1744
6L1745
6L1746
6L1747
6L1748
6L1749
6L1750
6L1751
6L1752
6L1753
6L1754
6L1755
6L1756
6L1757
6L1758
6L1759
6L1760
6L1761
6L1762
6L1763
6L1764
6L1765
6L1766
6L1767
6L1768
6L1769
6L1770
6L1771
6L1772
6L1773
6L1774
6L1775
6L1776
6L1777
6L1778
6L1779
6L1780
6L1781
6L1782
6L1783
6L1784
6L1785
6L1786
6L1787
6L1788
6L1789
6L1790
6L1791
6L1792
6L1793
6L1794
6L1795
6L1796
6L1797
6L1798
6L1799
6L1800
6L1801
6L1802
6L1803
6L1804
6L1805
6L1806
6L1807
6L1808
6L1809
6L1810
6L1811
6L1812
6L1813
6L1814
6L1815
6L1816
6L1817
6L1818
6L1819
6L1820
6L1821
6L1822
6L1823
6L1824
6L1825
6L1826
6L1827
6L1828
6L1829
6L1830
6L1831
6L1832
6L1833
6L1834
6L1835
6L1836
6L1837
6L1838
6L1839
6L1840
6L1841
6L1842
6L1843
6L1844
6L1845
6L1846
6L1847
6L1848
6L1849
6L1850
6L1851
6L1852
6L1853
6L1854
6L1855
6L1856
6L1857
6L1858
6L1859
6L1860
6L1861
6L1862
6L1863
6L1864
6L1865
6L1866
6L1867
6L1868
6L1869
6L1870
6L1871
6L1872
6L1873
6L1874
6L1875
6L1876
6L1877
6L1878
6L1879
6L1880
6L1881
6L1882
6L1883
6L1884
6L1885
6L1886
6L1887
6L1888
6L1889
6L1890
6L1891
6L1892
6L1893
6L1894
6L1895
6L1896
6L1897
6L1898
6L1899
6L1900
6L1901
6L1902
6L1903
6L1904
6L1905
6L1906
6L1907
6L1908
6L1909
6L1910
6L1911
6L1912
6L1913
6L1914
6L1915
6L1916
6L1917
6L1918
6L1919
6L1920
6L1921
6L1922
6L1923
6L1924
6L1925
6L1926
6L1927
6L1928
6L1929
6L1930
6L1931
6L1932
6L1933
6L1934
6L1935
6L1936
6L1937
6L1938
6L1939
6L1940
6L1941
6L1942
6L1943
6L1944
6L1945
6L1946
6L1947
6L1948
6L1949
6L1950
6L1951
6L1952
6L1953
6L1954
6L1955
6L1956
6L1957
6L1958
6L1959
6L1960
6L1961
6L1962
6L1963
6L1964
6L1965
6L1966
6L1967
6L1968
6L1969
6L1970
6L1971
6L1972
6L1973
6L1974
6L1975
6L1976
6L1977
6L1978
6L1979
6L1980
6L1981
6L1982
6L1983
6L1984
6L1985
6L1986
6L1987
6L1988
6L1989
6L1990
6L1991
6L1992
6L1993
6L1994
6L1995
6L1996
6L1997
6L1998
6L1999
6L2000
6L2001
6L2002
6L2003
6L2004
6L2005
6L2006
6L2007
6L2008
6L2009
6L2010
6L2011
6L2012
6L2013
6L2014
6L2015
6L2016
6L2017
6L2018
6L2019
6L2020
6L2021
6L2022
6L2023
6L2024
6L2025
6L2026
6L2027
6L2028
6L2029
6L2030
6L2031
6L2032
6L2033
6L2034
6L2035
6L2036
6L2037
6L2038
6L2039
6L2040
6L2041
6L2042
6L2043
6L2044
6L2045
6L2046
6L2047
6L2048
6L2049
6L2050
6L2051
6L2052
6L2053
6L2054
6L2055
6L2056
6L2057
6L2058
6L2059
6L2060
6L2061
6L2062
6L2063
6L2064
6L2065
6L2066
6L2067
6L2068
6L2069
6L2070
6L2071
6L2072
6L2073
6L2074
6L2075
6L2076
6L2077
6L2078
6L2079
6L2080
6L2081
6L2082
6L2083
6L2084
6L2085
6L2086
6L2087
6L2088
6L2089
6L2090
6L2091
6L2092
6L2093
6L2094
6L2095
6L2096
6L2097
6L2098
6L2099
6L2100
6L2101
6L2102
6L2103
6L2104
6L2105
6L2106
6L2107
6L2108
6L2109
6L2110
6L2111
6L2112
6L2113
6L2114
6L2115
6L2116
6L2117
6L2118
6L2119
6L2120
6L2121
6L2122
6L2123
6L2124
6L2125
6L2126
6L2127
6L2128
6L2129
6L2130
6L2131
6L2132
6L2133
6L2134
6L2135
6L2136
6L2137
6L2138
6L2139
6L2140
6L2141
6L2142
6L2143
6L2144
6L2145
6L2146
6L2147
6L2148
6L2149
6L2150
6L2151
6L2152
6L2153
6L2154
6L2155
6L2156
6L2157
6L2158
6L2159
6L2160
6L2161
6L2162
6L2163
6L2164
6L2165
6L2166
6L2167
6L2168
6L2169
6L2170
6L2171
6L2172
6L2173
6L2174
6L2175
6L2176
6L2177
6L2178
6L2179
6L2180
6L2181
6L2182
6L2183
6L2184
6L2185
6L2186
6L2187
6L2188
6L2189
6L2190
6L2191
6L2192
6L2193
6L2194
6L2195
6L2196
6L2197
6L2198
6L2199
6L2200
6L2201
6L2202
6L2203
6L2204
6L2205
6L2206
6L2207
6L2208
6L2209
6L2210
6L2211
6L2212
6L2213
6L2214
6L2215
6L2216
6L2217
6L2218
6L2219
6L2220
6L2221
6L2222
6L2223
6L2224
6L2225
6L2226
6L2227
6L2228
6L2229
6L2230
6L2231
6L2232
6L2233
6L2234
6L2235
6L2236
6L2237
6L2238
6L2239
6L2240
6L2241
6L2242
6L2243
6L2244
6L2245
6L2246
6L2247
6L2248
6L2249
6L2250
6L2251
6L2252
6L2253
6L2254
6L2255
6L2256
6L2257
6L2258
6L2259
6L2260
6L2261
6L2262
6L2263
6L2264
6L2265
6L2266
6L2267
6L2268
6L2269
6L2270
6L2271
6L2272
6L2273
6L2274
6L2275
6L2276
6L2277
6L2278
6L2279
6L2280
6L2281
6L2282
6L2283
6L2284
6L2285
6L2286
6L2287
6L2288
6L2289
6L2290
6L2291
6L2292
6L2293
6L2294
6L2295
6L2296
6L2297
6L2298
6L2299
6L2300
6L2301
6L2302
6L2303
6L2304
6L2305
6L2306
6L2307
6L2308
6L2309
6L2310
6L2311
6L2312
6L2313
6L2314
6L2315
6L2316
6L2317
6L2318
6L2319
6L2320
6L2321
6L2322
6L2323
6L2324
6L2325
6L2326
6L2327
6L2328
6L2329
6L2330
6L2331
6L2332
6L2333
6L2334
6L2335
6L2336
6L2337
6L2338
6L2339
6L2340
6L2341
6L2342
6L2343
6L2344
6L2345
6L2346
6L2347
6L2348
6L2349
6L2350
6L2351
6L2352
6L2353
6L2354
6L2355
6L2356
6L2357
6L2358
6L2359
6L2360
6L2361
6L2362
6L2363
6L2364
6L2365
6L2366
6L2367
6L2368
6L2369
6L2370
6L2371
6L2372
6L2373
6L2374
6L2375
6L2376
6L2377
6L2378
6L2379
6L2380
6L2381
6L2382
6L2383
6L2384
6L2385
6L2386
6L2387
6L2388
6L2389
6L2390
6L2391
6L2392
6L2393
6L2394
6L2395
6L2396
6L2397
6L2398
6L2399
6L2400
6L2401
6L2402
6L2403
6L2404
6L2405
6L2406
6L2407
6L2408
6L2409
6L2410
6L2411
6L2412
6L2413
6L2414
6L2415
6L2416
6L2417
6L2418
6L2419
6L2420
6L2421
6L2422
6L2423
6L2424
6L2425
6L2426
6L2427
6L2428
6L2429
6L2430
6L2431
6L2432
6L2433
6L2434
6L2435
6L2436
6L2437
6L2438
6L2439
6L2440
6L2441
6L2442
6L2443
6L2444
6L2445
6L2446
6L2447
6L2448
6L2449
6L2450
6L2451
6L2452
6L2453
6L2454
6L2455
6L2456
6L2457
6L2458
6L2459
6L2460
6L2461
6L2462
6L2463
6L2464
6L2465
6L2466
6L2467
6L2468
6L2469
6L2470
6L2471
6L2472
6L2473
6L2474
6L2475
6L2476
6L2477
6L2478
6L2479
6L2480
6L2481
6L2482
6L2483
6L2484
6L2485
6L2486
6L2487
6L2488
6L2489
6L2490
6L2491
6L2492
6L2493
6L2494
6L2495
6L2496
6L2497
6L2498
6L2499
6L2500
6L2501
6L2502
6L2503
6L2504
6L2505
6L2506
6L2507
6L2508
6L2509
6L2510
6L2511
6L2512
6L2513
6L2514
6L2515
6L2516
6L2517
6L2518
6L2519
6L2520
6L2521
6L2522
6L2523
6L2524
6L2525
6L2526
6L2527
6L2528
6L2529
6L2530
6L2531
6L2532
6L2533
6L2534
6L2535
6L2536
6L2537
6L2538
6L2539
6L2540
6L2541
6L2542
6L2543
6L2544
6L2545
6L2546
6L2547
6L2548
6L2549
6L2550
6L2551
6L2552
6L2553
6L2554
6L2555
6L2556
6L2557
6L2558
6L2559
6L2560
6L2561
6L2562
6L2563
6L2564
6L2565
6L2566
6L2567
6L2568
6L2569
6L2570
6L2571
6L2572
6L2573
6L2574
6L2575
6L2576
6L2577
6L2578
6L2579
6L2580
6L2581
6L2582
6L2583
6L2584
6L2585
6L2586
6L2587
6L2588
6L2589
6L2590
6L2591
6L2592
6L2593
6L2594
6L2595
6L2596
6L2597
6L2598
6L2599
6L2600
6L2601
6L2602
6L2603
6L2604
6L2605
6L2606
6L2607
6L2608
6L2609
6L2610
6L2611
6L2612
6L2613
6L2614
6L2615
6L2616
6L2617
6L2618
6L2619
6L2620
6L2621
6L2622
6L2623
6L2624
6L2625
6L2626
6L2627
6L2628
6L2629
6L2630
6L2631
6L2632
6L2633
6L2634
6L2635
6L2636
6L2637
6L2638
6L2639
6L2640
6L2641
6L2642
6L2643
6L2644
6L2645
6L2646
6L2647
6L2648
6L2649
6L2650
6L2651
6L2652
6L2653
6L2654
6L2655
6L2656
6L2657
6L2658
6L2659
6L2660
6L2661
6L2662
6L2663
6L2664
6L2665
6L2666
6L2667
6L2668
6L2669
6L2670
6L2671
6L2672
6L2673
6L2674
6L2675
6L2676
6L2677
6L2678
6L2679
6L2680
6L2681
6L2682
6L2683
6L2684
6L2685
6L2686
6L2687
6L2688
6L2689
6L2690
6L2691
6L2692
6L2693
6L2694
6L2695
6L2696
6L2697
6L2698
6L2699
6L2700
6L2701
6L2702
6L2703
6L2704
6L2705
6L2706
6L2707
6L2708
6L2709
6L2710
6L2711
6L2712
6L2713
6L2714
6L2715
6L2716
6L2717
6L2718
6L2719
6L2720
6L2721
6L2722
6L2723
6L2724
6L2725
6L2726
6L2727
6L2728
6L2729
6L2730
6L2731
6L2732
6L2733
6L2734
6L2735
6L2736
6L2737
6L2738
6L2739
6L2740
6L2741
6L2742
6L2743
6L2744
6L2745
6L2746
6L2747
6L2748
6L2749
6L2750
6L2751
6L2752
6L2753
6L2754
6L2755
6L2756
6L2757
6L2758
6L2759
6L2760
6L2761
6L2762
6L2763
6L2764
6L2765
6L2766
6L2767
6L2768
6L2769
6L2770
6L2771
6L2772
6L2773
6L2774
6L2775
6L2776
6L2777
6L2778
6L2779
6L2780
6L2781
6L2782
6L2783
6L2784
6L2785
6L2786
6L2787
6L2788
6L2789
6L2790
6L2791
6L2792
6L2793
6L2794
6L2795
6L2796
6L2797
6L2798
6L2799
6L2800
6L2801
6L2802
6L2803
6L2804
6L2805
6L2806
6L2807
6L2808
6L2809
6L2810
6L2811
6L2812
6L2813
6L2814
6L2815
6L2816
6L2817
6L2818
6L2819
6L2820
6L2821
6L2822
6L2823
6L2824
6L2825
6L2826
6L2827
6L2828
6L2829
6L2830
6L2831
6L2832
6L2833
6L2834
6L2835
6L2836
6L2837
6L2838
6L2839
6L2840
6L2841
6L2842
6L2843
6L2844
6L2845
6L2846
6L2847
6L2848
6L2849
6L2850
6L2851
6L2852
6L2853
6L2854
6L2855
6L2856
6L2857
6L2858
6L2859
6L2860
6L2861
6L2862
6L2863
6L2864
6L2865
6L2866
6L2867
6L2868
6L2869
6L2870
6L2871
6L2872
6L2873
6L2874
6L2875
6L2876
6L2877
6L2878
6L2879
6L2880
6L2881
6L2882
6L2883
6L2884
6L2885
6L2886
6L2887
6L2888
6L2889
6L2890
6L2891
6L2892
6L2893
6L2894
6L2895
6L2896
6L2897
6L2898
6L2899
6L2900
6L2901
6L2902
6L2903
6L2904
6L2905
6L2906
6L2907
6L2908
6L2909
6L2910
6L2911
6L2912
6L2913
6L2914
6L2915
6L2916
6L2917
6L2918
6L2919
6L2920
6L2921
6L2922
6L2923
6L2924
6L2925
6L2926
6L2927
6L2928
6L2929
6L2930
6L2931
6L2932
6L2933
6L2934
6L2935
6L2936
6L2937
6L2938
6L2939
6L2940
6L2941
6L2942
6L2943
6L2944
6L2945
6L2946
6L2947
6L2948
6L2949
6L2950
6L2951
6L2952
6L2953
6L2954
6L2955
6L2956
6L2957
6L2958
6L2959
6L2960
6L2961
6L2962
6L2963
6L2964
6L2965
6L2966
6L2967
6L2968
6L2969
6L2970
6L2971
6L2972
6L2973
6L2974
6L2975
6L2976
6L2977
6L2978
6L2979
6L2980
6L2981
6L2982
6L2983
6L2984
6L2985
6L2986
6L2987
6L2988
6L2989
6L2990
6L2991
6L2992
6L2993
6L2994
6L2995
6L2996
6L2997
6L2998
6L2999
6L3000
6L3001
6L3002
6L3003
6L3004
6L3005
6L3006
6L3007
6L3008
6L3009
6L3010
6L3011
6L3012
6L3013
6L3014
6L3015
6L3016
6L3017
6L3018
6L3019
6L3020
6L3021
6L3022
6L3023
6L3024
6L3025
6L3026
6L3027
6L3028
6L3029
6L3030
6L3031
6L3032
6L3033
6L3034
6L3035
6L3036
6L3037
6L3038
6L3039
6L3040
6L3041
6L3042
6L3043
6L3044
6L3045
6L3046
6L3047
6L3048
6L3049
6L3050
6L3051
6L3052
6L3053
6L3054
6L3055
6L3056
6L3057
6L3058
6L3059
6L3060
6L3061
6L3062
6L3063
6L3064
6L3065
6L3066
6L3067
6L3068
6L3069
6L3070
6L3071
6L3072
6L3073
6L3074
6L3075
6L3076
6L3077
6L3078
6L3079
6L3080
6L3081
6L3082
6L3083
6L3084
6L3085
6L3086
6L3087
6L3088
6L3089
6L3090
6L3091
6L3092
6L3093
6L3094
6L3095
6L3096
6L3097
6L3098
6L3099
6L3100
6L3101
6L3102
6L3103
6L3104
6L3105
6L3106
6L3107
6L3108
6L3109
6L3110
6L3111
6L3112
6L3113
6L3114
6L3115
6L3116
6L3117
6L3118
6L3119
6L3120
6L3121
6L3122
6L3123
6L3124
6L3125
6L3126
6L3127
6L3128
6L3129
6L3130
6L3131
6L3132
6L3133
6L3134
6L3135
6L3136
6L3137
6L3138
6L3139
6L3140
6L3141
6L3142
6L3143
6L3144
6L3145
6L3146
6L3147
6L3148
6L3149

Figure A2-13: 2019 Summer Peak Pre-Project Case A - N-0 (System Normal Condition)

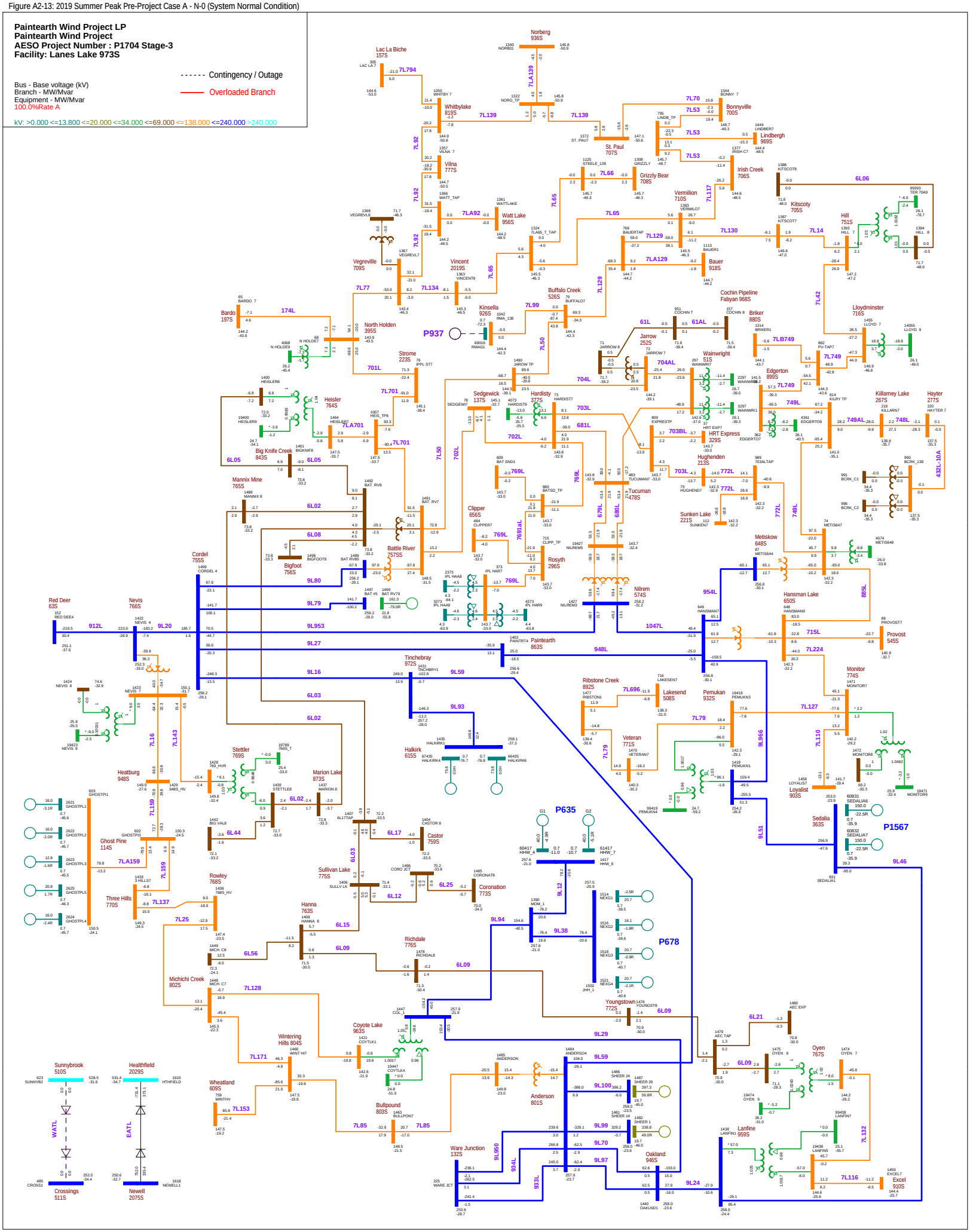
Paintearth Wind Project LP
Paintearth Wind Project
AESO Project Number : P1704 Stage-3
Facility: Lanes Lake 973S
Contingency / Outage
Overloaded Branch
Bus - Base voltage (kV)
Branch - MW/Mvar
Equipment - MW/Mvar
100.0%Rate A
kV: >0.000 <=13.800 <=20.000 <=34.000 <=69.000 <=138.000 <=240.000 >240.000
Norberg 936S
Lac La Biche 157S
Whitbylake 819S
Vilna 777S
Watt Lake 956S
Vegreville 709S
Vincent 2019S
Kinsella 926S
Buffalo Creek 526S
St. Paul 707S
Bonnyville 700S
Lindbergh 969S
Irish Creek 706S
Grizzly Bear 708S
Vermilion 710S
Bauer 918S
Kitscoty 705S
Hill 751S
Lloydminster 716S
Cochin Pipeline
Fabyan 968S
Briker 880S
Wainwright 51S
Edgerton 899S
Killarney Lake 267S
Hayter 277S
Jarrow 252S
Strome 223S
Sedgewick 137S
Hardisty 377S
HRT Express 329S
Hughenden 213S
Sunken Lake 221S
Tucuman 478S
Metiskow 648S
Provost 545S
Hansman Lake 650S
Bardo 197S
North Holden 395S
Heisler 764S
Big Knife Creek 843S
Mannix Mine 765S
Cordel 755S
Battle River 757SS
Bigfoot 756S
Clipper 656S
Rosyth 296S
Nilrem 574S
Paintearth 863S
Red Deer 63S
Nevis 766S
Tinchebray 972S
Ribstone Creek 892S
Lakesend 508S
Pemukan 932S
Veteran 771S
Monitor 774S
Loyalist 903S
Sedalia 363S
Halkirk 615S
Stettler 769S
Heatburg 948S
Marion Lake 873S
Ghost Pine 114S
Three Hills 770S
Rowley 768S
Sullivan Lake 775S
Castor 759S
Coronation 773S
Hanna 763S
Richdale 776S
Michichi Creek 802S
Youngstown 772S
Oyen 767S
Lanfine 959S
Excel 910S
Oakland 946S
Ware Junction 132S
Anderson 801S
Bullpound 803S
Wheatland 609S
Wintering Hills 804S
Coyote Lake 963S
Sunnybrook 510S
Healthfield 2029S
Crossings 511S
Newell 2075S
P937
P635
P678
P1567
174L
701L
702L
703L
704L
704AL
681L
769L
769AL
772L
772AL
749L
749AL
748L
432L-10A
6L05
6L06
6L02
6L08
9L80
9L79
9L20
912L
9L953
9L27
9L16
9L59
9L93
6L03
7L16
7L143
7L159
7LA159
7L169
7L137
7L25
6L44
6L17
6L02
6L25
6L12
6L15
6L09
6L56
7L128
7L171
7L153
7L85
6L03
9L94
9L38
9L12
9L29
9L59
9L100
9L99
9L70
9L97
9L24
9L950
934L
933L
954L
948L
1047L
715L
7L224
7L127
7L110
9L966
9L51
885L
7L116
6L21
7L132
7L749
7L14
6L130
7L129
7L65
7L66
7L92
7L139
7L53
7L70
7L117
7L42
7L50
7L99
7L77
7L134
7LA92
7LA139
7LA129
7LA701
7LA701
7LA701

Figure A2-14: 2019 Summer Peak Pre-Project Case A - Contingency of 395ST1 (North Holden 395S Transformer T1)

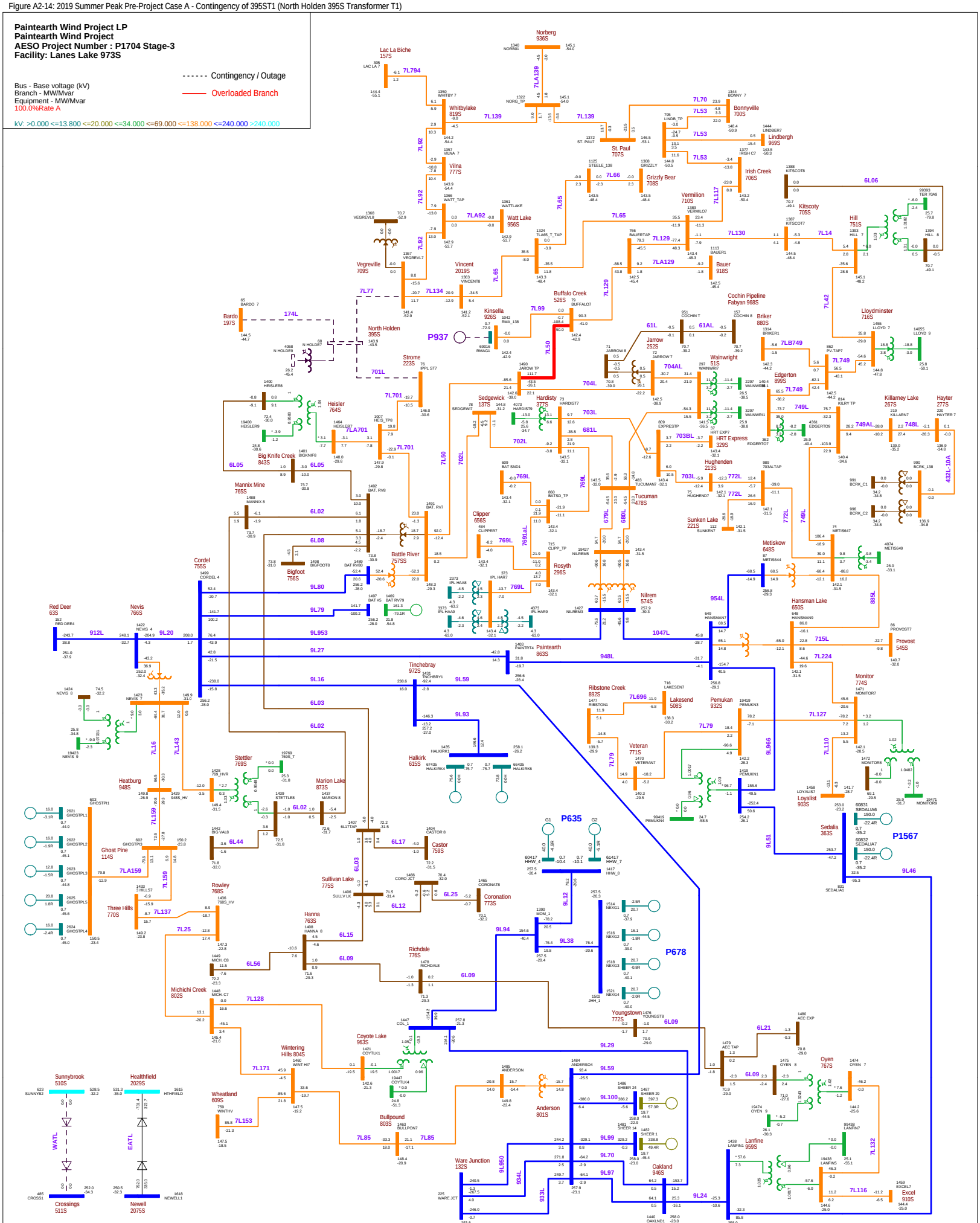

Figure A2-15: 2019 Summer Peak Pre-Project Case A - Contingency of 7L749\749L\7LB749 (Edgerton 899S - Briker 880S - Lloydminster 716S)

Paintearth Wind Project LP
Paintearth Wind Project
AESO Project Number : P1704 Stage-3
Facility: Lanes Lake 973S

Contingency / Outage
Overloaded Branch

Bus - Base voltage (kV)
Branch - MW/Mvar
Equipment - MW/Mvar
100.0%Rate A

kV: >0.000 <=13.800 <=20.000 <=34.000 <=69.000 <=138.000 <=240.000 >240.000

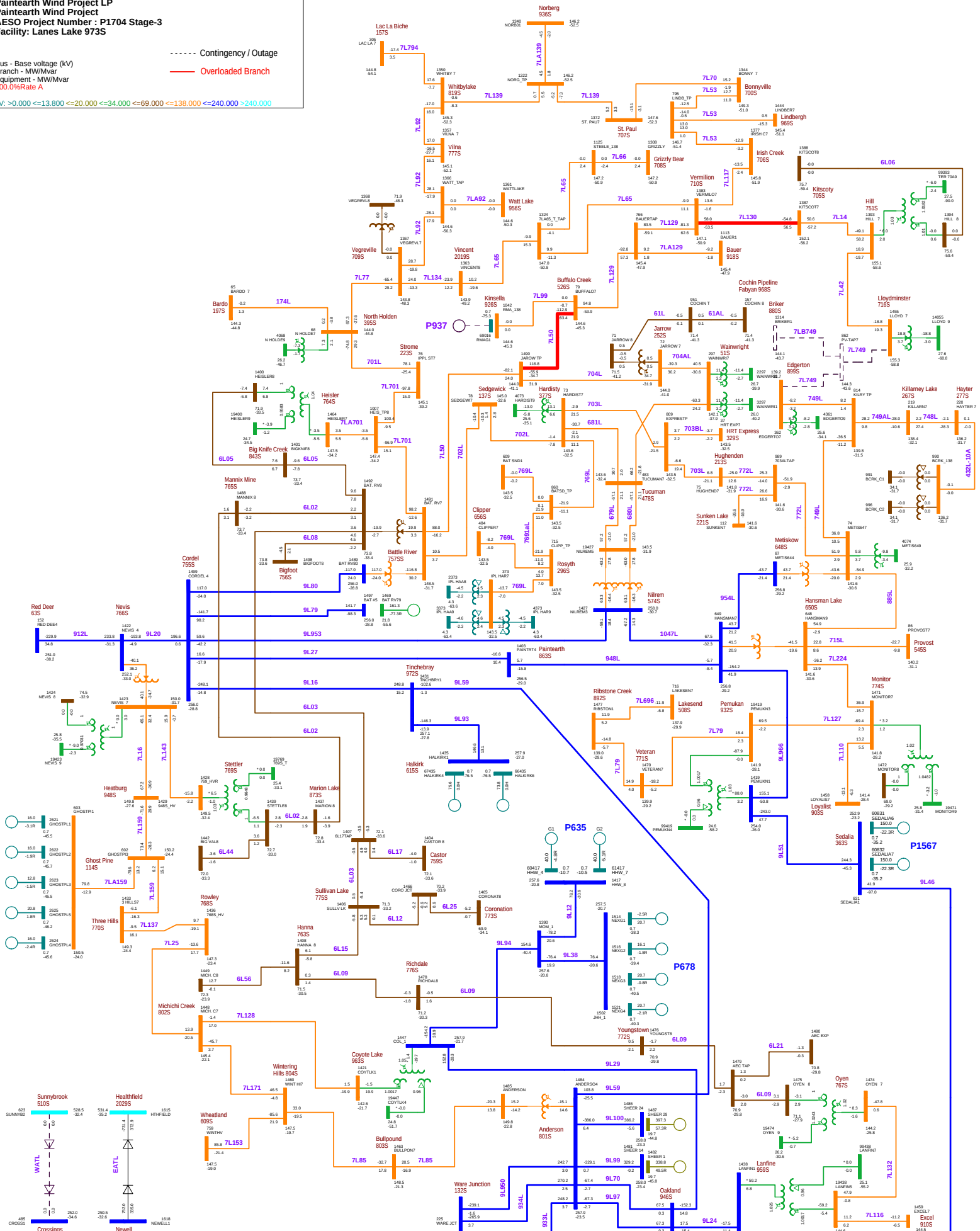

Figure A2-16: 2019 Summer Peak Pre-Project Case A - Contingency of 899ST3A (Edgerton 899S Transformer T3A)

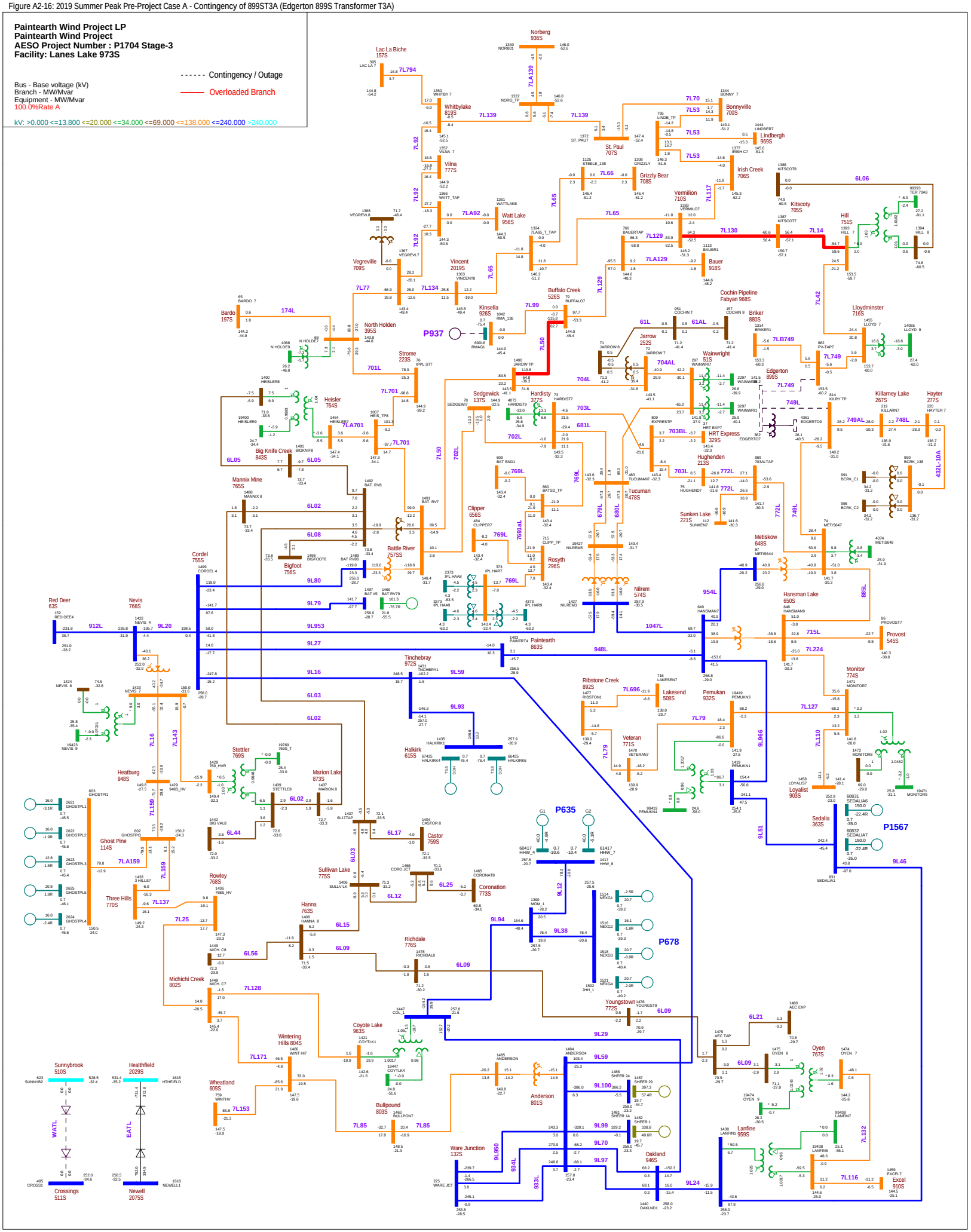

Figure A2-17: 2019 Summer Peak Pre-Project Case A - Contingency of 7L77 (North Holden 395S - Vegreville 709S)

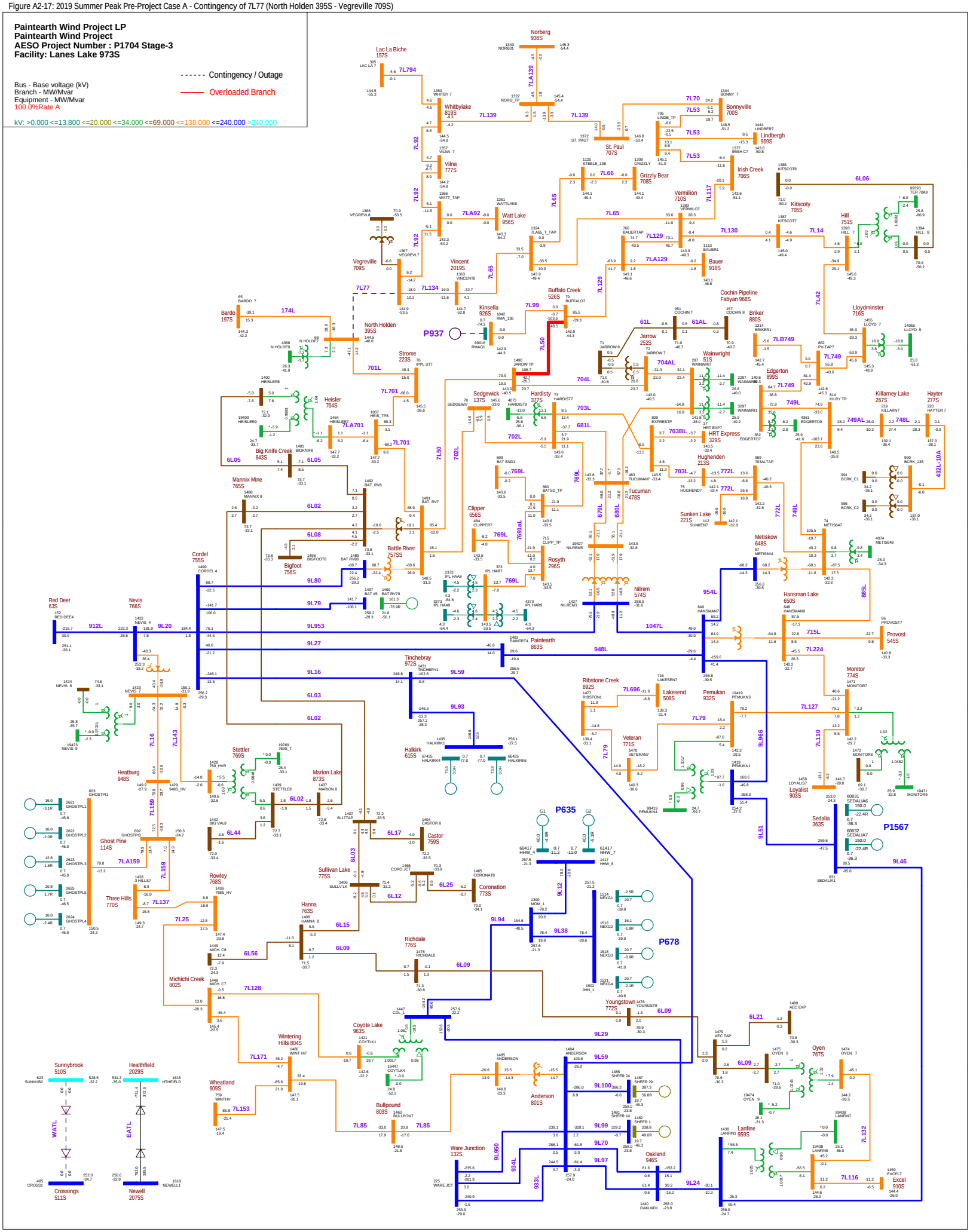
Paintearth Wind Project LP
Paintearth Wind Project
AESO Project Number : P1704 Stage-3
Facility: Lanes Lake 973S
Contingency / Outage
Overloaded Branch
Bus - Base voltage (kV)
Branch - MW/Mvar
Equipment - MW/Mvar
100.0%Rate A
kV: >0.000 <=13.800 <=20.000 <=34.000 <=69.000 <=138.000 <=240.000 >240.000
Norberg 936S
Lac La Biche 157S
Whitbylake 819S
Vilna 777S
Watt Lake 956S
Vegreville 709S
Vincent 2019S
Kinsella 926S
Buffalo Creek 526S
Bardo 197S
North Holden 395S
P937
Strome 223S
Heisler 764S
Big Knife Creek 843S
Mannix Mine 765S
Cordel 755S
Red Deer 63S
Nevis 766S
Bigfoot 756S
Battle River 757SS
Tinchebray 972S
Paintearth 863S
Tucuman 478S
Clipper 656S
Rosyth 296S
Nilrem 574S
Sedgewick 137S
Hardisty 377S
Sunken Lake 221S
Hughenden 213S
HRT Express 329S
Jarrow 252S
Wainwright 51S
Vermilion 710S
Bauer 918S
Grizzly Bear 708S
St. Paul 707S
Bonnyville 700S
Lindbergh 969S
Irish Creek 706S
Kitscoty 705S
Hill 751S
Lloydminster 716S
Cochin Pipeline
Fabyan 968S
Briker 880S
Edgerton 899S
Killarney Lake 267S
Hayter 277S
Metiskow 648S
Hansman Lake 650S
Provost 545S
Monitor 774S
Ribstone Creek 892S
Lakesend 508S
Pemukan 932S
Veteran 771S
Loyalist 903S
Sedalia 363S
Halkirk 615S
Stettler 769S
Heatburg 948S
Marion Lake 873S
Castor 759S
Ghost Pine 114S
Three Hills 770S
Rowley 768S
Sullivan Lake 775S
Coronation 773S
Hanna 763S
Richdale 776S
Michichi Creek 802S
Sunnybrook 510S
Healthfield 2029S
Crossings 511S
Newell 2075S
Wheatland 609S
Wintering Hills 804S
Coyote Lake 963S
Bullpound 803S
Anderson 801S
Ware Junction 132S
Oakland 946S
Youngstown 772S
Lanfine 959S
Oyen 767S
Excel 910S
P635
P678
P1567
912L
9L20
9L80
9L79
9L953
9L27
9L16
9L59
9L93
6L03
6L02
6L08
6L05
6L06
6L14
6L21
6L09
6L56
6L44
6L17
6L25
6L12
6L15
6L09
6L09
9L29
9L59
9L100
9L99
9L70
9L97
9L24
9L94
9L38
9L12
948L
1047L
954L
885L
715L
7L224
9L966
9L51
7L110
7L127
7L79
7L696
7L129
7L130
7L53
7L70
7L117
7L65
7L66
7L14
7L749
7L42
7L92
7L139
7L794
7L77
7L134
7L65
7L50
7L99
7L129
7L92
7L92
7L92

Figure A2-18: 2019 Summer Peak Pre-Project Case A - Contingency of 648ST1 (Metiskow 648S Transformer T1)

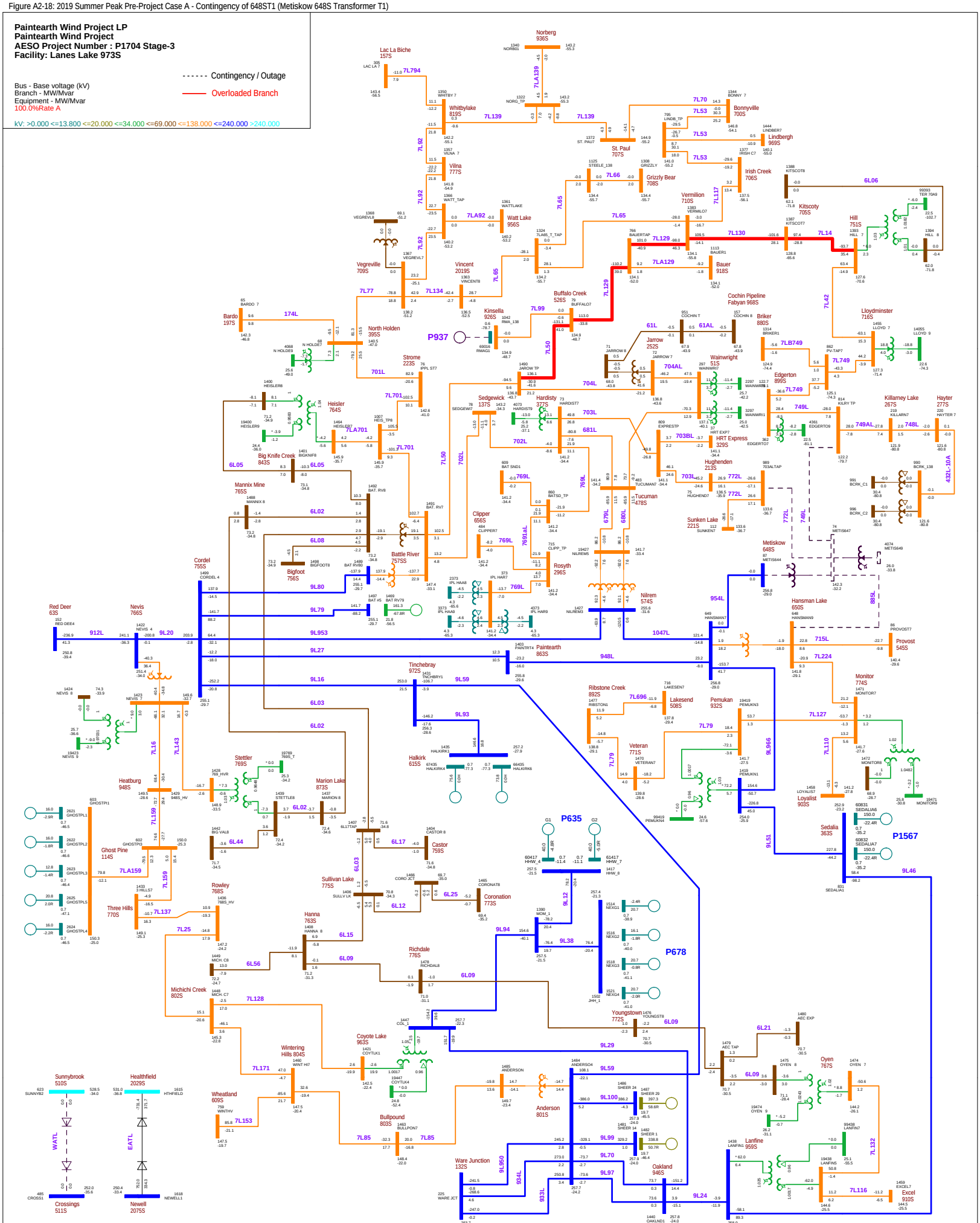
Paintearth Wind Project LP
Paintearth Wind Project
AESO Project Number : P1704 Stage-3
Facility: Lanes Lake 973S
Contingency / Outage
Overloaded Branch
Bus - Base voltage (kV)
Branch - MW/Mvar
Equipment - MW/Mvar
100.0%Rate A
kV: >0.000 <=13.800 <=20.000 <=34.000 <=69.000 <=138.000 <=240.000 >240.000
Norberg 936S
Lac La Biche 157S
Whitbylake 819S
Vilna 777S
Watt Lake 956S
Vegreville 709S
Vincent 2019S
Kinsella 926S
Buffalo Creek 526S
St. Paul 707S
Grizzly Bear 708S
Vermilion 710S
Bonnyville 700S
Lindbergh 969S
Irish Creek 706S
Kitscoty 705S
Hill 751S
Bardo 197S
North Holden 395S
P937
Strome 223S
Heisler 764S
Big Knife Creek 843S
Mannix Mine 765S
Bigfoot 756S
Battle River 757SS
Sedgewick 137S
Hardisty 377S
Jarrow 252S
Wainwright 51S
Edgerton 899S
Lloydminster 716S
Cochin Pipeline
Fabyan 968S
Briker 880S
Killarney Lake 267S
Hayter 277S
HRT Express 329S
Hughenden 213S
Sunken Lake 221S
Tucuman 478S
Clipper 656S
Rosyth 296S
Nilrem 574S
Metiskow 648S
Hansman Lake 650S
Provost 545S
Cordel 755S
Red Deer 63S
Nevis 766S
Tinchebray 972S
Paintearth 863S
Ribstone Creek 892S
Lakesend 508S
Pemukan 932S
Monitor 774S
Veteran 771S
Loyalist 903S
Sedalia 363S
P1567
Halkirk 615S
Heatburg 948S
Ghost Pine 114S
Stettler 769S
Marion Lake 873S
Three Hills 770S
Rowley 768S
Hanna 763S
Sullivan Lake 775S
Castor 759S
Coronation 773S
Richdale 776S
Michichi Creek 802S
Wintering Hills 804S
Coyote Lake 963S
Bullpound 803S
Wheatland 609S
Sunnybrook 510S
Healthfield 2029S
Crossings 511S
Newell 2075S
WATL
EATL
P635
P678
Youngstown 772S
Oyen 767S
Lanfine 959S
Excel 910S
Anderson 801S
Ware Junction 132S
Oakland 946S
Michichi Creek 802S
Yellowhead 1
Yellowhead 2
Yellowhead 3
Yellowhead 4
Yellowhead 5
Yellowhead 6
Yellowhead 7
Yellowhead 8
Yellowhead 9
Yellowhead 10
Yellowhead 11
Yellowhead 12
Yellowhead 13
Yellowhead 14
Yellowhead 15
Yellowhead 16
Yellowhead 17
Yellowhead 18
Yellowhead 19
Yellowhead 20
Yellowhead 21
Yellowhead 22
Yellowhead 23
Yellowhead 24
Yellowhead 25
Yellowhead 26
Yellowhead 27
Yellowhead 28
Yellowhead 29
Yellowhead 30
Yellowhead 31
Yellowhead 32
Yellowhead 33
Yellowhead 34
Yellowhead 35
Yellowhead 36
Yellowhead 37
Yellowhead 38
Yellowhead 39
Yellowhead 40
Yellowhead 41
Yellowhead 42
Yellowhead 43
Yellowhead 44
Yellowhead 45
Yellowhead 46
Yellowhead 47
Yellowhead 48
Yellowhead 49
Yellowhead 50
Yellowhead 51
Yellowhead 52
Yellowhead 53
Yellowhead 54
Yellowhead 55
Yellowhead 56
Yellowhead 57
Yellowhead 58
Yellowhead 59
Yellowhead 60
Yellowhead 61
Yellowhead 62
Yellowhead 63
Yellowhead 64
Yellowhead 65
Yellowhead 66
Yellowhead 67
Yellowhead 68
Yellowhead 69
Yellowhead 70
Yellowhead 71
Yellowhead 72
Yellowhead 73
Yellowhead 74
Yellowhead 75
Yellowhead 76
Yellowhead 77
Yellowhead 78
Yellowhead 79
Yellowhead 80
Yellowhead 81
Yellowhead 82
Yellowhead 83
Yellowhead 84
Yellowhead 85
Yellowhead 86
Yellowhead 87
Yellowhead 88
Yellowhead 89
Yellowhead 90
Yellowhead 91
Yellowhead 92
Yellowhead 93
Yellowhead 94
Yellowhead 95
Yellowhead 96
Yellowhead 97
Yellowhead 98
Yellowhead 99
Yellowhead 100
Yellowhead 101
Yellowhead 102
Yellowhead 103
Yellowhead 104
Yellowhead 105
Yellowhead 106
Yellowhead 107
Yellowhead 108
Yellowhead 109
Yellowhead 110
Yellowhead 111
Yellowhead 112
Yellowhead 113
Yellowhead 114
Yellowhead 115
Yellowhead 116
Yellowhead 117
Yellowhead 118
Yellowhead 119
Yellowhead 120
Yellowhead 121
Yellowhead 122
Yellowhead 123
Yellowhead 124
Yellowhead 125
Yellowhead 126
Yellowhead 127
Yellowhead 128
Yellowhead 129
Yellowhead 130
Yellowhead 131
Yellowhead 132
Yellowhead 133
Yellowhead 134
Yellowhead 135
Yellowhead 136
Yellowhead 137
Yellowhead 138
Yellowhead 139
Yellowhead 140
Yellowhead 141
Yellowhead 142
Yellowhead 143
Yellowhead 144
Yellowhead 145
Yellowhead 146
Yellowhead 147
Yellowhead 148
Yellowhead 149
Yellowhead 150
Yellowhead 151
Yellowhead 152
Yellowhead 153
Yellowhead 154
Yellowhead 155
Yellowhead 156
Yellowhead 157
Yellowhead 158
Yellowhead 159
Yellowhead 160
Yellowhead 161
Yellowhead 162
Yellowhead 163
Yellowhead 164
Yellowhead 165
Yellowhead 166
Yellowhead 167
Yellowhead 168
Yellowhead 169
Yellowhead 170
Yellowhead 171
Yellowhead 172
Yellowhead 173
Yellowhead 174
Yellowhead 175
Yellowhead 176
Yellowhead 177
Yellowhead 178
Yellowhead 179
Yellowhead 180
Yellowhead 181
Yellowhead 182
Yellowhead 183
Yellowhead 184
Yellowhead 185
Yellowhead 186
Yellowhead 187
Yellowhead 188
Yellowhead 189
Yellowhead 190
Yellowhead 191
Yellowhead 192
Yellowhead 193
Yellowhead 194
Yellowhead 195
Yellowhead 196
Yellowhead 197
Yellowhead 198
Yellowhead 199
Yellowhead 200
Yellowhead 201
Yellowhead 202
Yellowhead 203
Yellowhead 204
Yellowhead 205
Yellowhead 206
Yellowhead 207
Yellowhead 208
Yellowhead 209
Yellowhead 210
Yellowhead 211
Yellowhead 212
Yellowhead 213
Yellowhead 214
Yellowhead 215
Yellowhead 216
Yellowhead 217
Yellowhead 218
Yellowhead 219
Yellowhead 220
Yellowhead 221
Yellowhead 222
Yellowhead 223
Yellowhead 224
Yellowhead 225
Yellowhead 226
Yellowhead 227
Yellowhead 228
Yellowhead 229
Yellowhead 230
Yellowhead 231
Yellowhead 232
Yellowhead 233
Yellowhead 234
Yellowhead 235
Yellowhead 236
Yellowhead 237
Yellowhead 238
Yellowhead 239
Yellowhead 240
Yellowhead 241
Yellowhead 242
Yellowhead 243
Yellowhead 244
Yellowhead 245
Yellowhead 246
Yellowhead 247
Yellowhead 248
Yellowhead 249
Yellowhead 250
Yellowhead 251
Yellowhead 252
Yellowhead 253
Yellowhead 254
Yellowhead 255
Yellowhead 256
Yellowhead 257
Yellowhead 258
Yellowhead 259
Yellowhead 260
Yellowhead 261
Yellowhead 262
Yellowhead 263
Yellowhead 264
Yellowhead 265
Yellowhead 266
Yellowhead 267
Yellowhead 268
Yellowhead 269
Yellowhead 270
Yellowhead 271
Yellowhead 272
Yellowhead 273
Yellowhead 274
Yellowhead 275
Yellowhead 276
Yellowhead 277
Yellowhead 278
Yellowhead 279
Yellowhead 280
Yellowhead 281
Yellowhead 282
Yellowhead 283
Yellowhead 284
Yellowhead 285
Yellowhead 286
Yellowhead 287
Yellowhead 288
Yellowhead 289
Yellowhead 290
Yellowhead 291
Yellowhead 292
Yellowhead 293
Yellowhead 294
Yellowhead 295
Yellowhead 296
Yellowhead 297
Yellowhead 298
Yellowhead 299
Yellowhead 300
Yellowhead 301
Yellowhead 302
Yellowhead 303
Yellowhead 304
Yellowhead 305
Yellowhead 306
Yellowhead 307
Yellowhead 308
Yellowhead 309
Yellowhead 310
Yellowhead 311
Yellowhead 312
Yellowhead 313
Yellowhead 314
Yellowhead 315
Yellowhead 316
Yellowhead 317
Yellowhead 318
Yellowhead 319
Yellowhead 320
Yellowhead 321
Yellowhead 322
Yellowhead 323
Yellowhead 324
Yellowhead 325
Yellowhead 326
Yellowhead 327
Yellowhead 328
Yellowhead 329
Yellowhead 330
Yellowhead 331
Yellowhead 332
Yellowhead 333
Yellowhead 334
Yellowhead 335
Yellowhead 336
Yellowhead 337
Yellowhead 338
Yellowhead 339
Yellowhead 340
Yellowhead 341
Yellowhead 342
Yellowhead 343
Yellowhead 344
Yellowhead 345
Yellowhead 346
Yellowhead 347
Yellowhead 348
Yellowhead 349
Yellowhead 350
Yellowhead 351
Yellowhead 352
Yellowhead 353
Yellowhead 354
Yellowhead 355
Yellowhead 356
Yellowhead 357
Yellowhead 358
Yellowhead 359
Yellowhead 360
Yellowhead 361
Yellowhead 362
Yellowhead 363
Yellowhead 364
Yellowhead 365
Yellowhead 366
Yellowhead 367
Yellowhead 368
Yellowhead 369
Yellowhead 370
Yellowhead 371
Yellowhead 372
Yellowhead 373
Yellowhead 374
Yellowhead 375
Yellowhead 376
Yellowhead 377
Yellowhead 378
Yellowhead 379
Yellowhead 380
Yellowhead 381
Yellowhead 382
Yellowhead 383
Yellowhead 384
Yellowhead 385
Yellowhead 386
Yellowhead 387
Yellowhead 388
Yellowhead 389
Yellowhead 390
Yellowhead 391
Yellowhead 392
Yellowhead 393
Yellowhead 394
Yellowhead 395
Yellowhead 396
Yellowhead 397
Yellowhead 398
Yellowhead 399
Yellowhead 400
Yellowhead 401
Yellowhead 402
Yellowhead 403
Yellowhead 404
Yellowhead 405
Yellowhead 406
Yellowhead 407
Yellowhead 408
Yellowhead 409
Yellowhead 410
Yellowhead 411
Yellowhead 412
Yellowhead 413
Yellowhead 414
Yellowhead 415
Yellowhead 416
Yellowhead 417
Yellowhead 418
Yellowhead 419
Yellowhead 420
Yellowhead 421
Yellowhead 422
Yellowhead 423
Yellowhead 424
Yellowhead 425
Yellowhead 426
Yellowhead 427
Yellowhead 428
Yellowhead 429
Yellowhead 430
Yellowhead 431
Yellowhead 432
Yellowhead 433
Yellowhead 434
Yellowhead 435
Yellowhead 436
Yellowhead 437
Yellowhead 438
Yellowhead 439
Yellowhead 440
Yellowhead 441
Yellowhead 442
Yellowhead 443
Yellowhead 444
Yellowhead 445
Yellowhead 446
Yellowhead 447
Yellowhead 448
Yellowhead 449
Yellowhead 450
Yellowhead 451
Yellowhead 452
Yellowhead 453
Yellowhead 454
Yellowhead 455
Yellowhead 456
Yellowhead 457
Yellowhead 458
Yellowhead 459
Yellowhead 460
Yellowhead 461
Yellowhead 462
Yellowhead 463
Yellowhead 464
Yellowhead 465
Yellowhead 466
Yellowhead 467
Yellowhead 468
Yellowhead 469
Yellowhead 470
Yellowhead 471
Yellowhead 472
Yellowhead 473
Yellowhead 474
Yellowhead 475
Yellowhead 476
Yellowhead 477
Yellowhead 478
Yellowhead 479
Yellowhead 480
Yellowhead 481
Yellowhead 482
Yellowhead 483
Yellowhead 484
Yellowhead 485
Yellowhead 486
Yellowhead 487
Yellowhead 488
Yellowhead 489
Yellowhead 490
Yellowhead 491
Yellowhead 492
Yellowhead 493
Yellowhead 494
Yellowhead 495
Yellowhead 496
Yellowhead 497
Yellowhead 498
Yellowhead 499
Yellowhead 500
Yellowhead 501
Yellowhead 502
Yellowhead 503
Yellowhead 504
Yellowhead 505
Yellowhead 506
Yellowhead 507
Yellowhead 508
Yellowhead 509
Yellowhead 510
Yellowhead 511
Yellowhead 512
Yellowhead 513
Yellowhead 514
Yellowhead 515
Yellowhead 516
Yellowhead 517
Yellowhead 518
Yellowhead 519
Yellowhead 520
Yellowhead 521
Yellowhead 522
Yellowhead 523
Yellowhead 524
Yellowhead 525
Yellowhead 526
Yellowhead 527
Yellowhead 528
Yellowhead 529
Yellowhead 530
Yellowhead 531
Yellowhead 532
Yellowhead 533
Yellowhead 534
Yellowhead 535
Yellowhead 536
Yellowhead 537
Yellowhead 538
Yellowhead 539
Yellowhead 540
Yellowhead 541
Yellowhead 542
Yellowhead 543
Yellowhead 544
Yellowhead 545
Yellowhead 546
Yellowhead 547
Yellowhead 548
Yellowhead 549
Yellowhead 550
Yellowhead 551
Yellowhead 552
Yellowhead 553
Yellowhead 554
Yellowhead 555
Yellowhead 556
Yellowhead 557
Yellowhead 558
Yellowhead 559
Yellowhead 560
Yellowhead 561
Yellowhead 562
Yellowhead 563
Yellowhead 564
Yellowhead 565
Yellowhead 566
Yellowhead 567
Yellowhead 568
Yellowhead 569
Yellowhead 570
Yellowhead 571
Yellowhead 572
Yellowhead 573
Yellowhead 574
Yellowhead 575
Yellowhead 576
Yellowhead 577
Yellowhead 578
Yellowhead 579
Yellowhead 580
Yellowhead 581
Yellowhead 582
Yellowhead 583
Yellowhead 584
Yellowhead 585
Yellowhead 586
Yellowhead 587
Yellowhead 588
Yellowhead 589
Yellowhead 590
Yellowhead 591
Yellowhead 592
Yellowhead 593
Yellowhead 594
Yellowhead 595
Yellowhead 596
Yellowhead 597
Yellowhead 598
Yellowhead 599
Yellowhead 600
Yellowhead 601
Yellowhead 602
Yellowhead 603
Yellowhead 604
Yellowhead 605
Yellowhead 606
Yellowhead 607
Yellowhead 608
Yellowhead 609
Yellowhead 610
Yellowhead 611
Yellowhead 612
Yellowhead 613
Yellowhead 614
Yellowhead 615
Yellowhead 616
Yellowhead 617
Yellowhead 618
Yellowhead 619
Yellowhead 620
Yellowhead 621
Yellowhead 622
Yellowhead 623
Yellowhead 624
Yellowhead 625
Yellowhead 626
Yellowhead 627
Yellowhead 628
Yellowhead 629
Yellowhead 630
Yellowhead 631
Yellowhead 632
Yellowhead 633
Yellowhead 634
Yellowhead 635
Yellowhead 636
Yellowhead 637
Yellowhead 638
Yellowhead 639
Yellowhead 640
Yellowhead 641
Yellowhead 642
Yellowhead 643
Yellowhead 644
Yellowhead 645
Yellowhead 646
Yellowhead 647
Yellowhead 648
Yellowhead 649
Yellowhead 650
Yellowhead 651
Yellowhead 652
Yellowhead 653
Yellowhead 654
Yellowhead 655
Yellowhead 656
Yellowhead 657
Yellowhead 658
Yellowhead 659
Yellowhead 660
Yellowhead 661
Yellowhead 662
Yellowhead 663
Yellowhead 664
Yellowhead 665
Yellowhead 666
Yellowhead 667
Yellowhead 668
Yellowhead 669
Yellowhead 670
Yellowhead 671
Yellowhead 672
Yellowhead 673
Yellowhead 674
Yellowhead 675
Yellowhead 676
Yellowhead 677
Yellowhead 678
Yellowhead 679
Yellowhead 680
Yellowhead 681
Yellowhead 682
Yellowhead 683
Yellowhead 684
Yellowhead 685
Yellowhead 686
Yellowhead 687
Yellowhead 688
Yellowhead 689
Yellowhead 690
Yellowhead 691
Yellowhead 692
Yellowhead 693
Yellowhead 694
Yellowhead 695
Yellowhead 696
Yellowhead 697
Yellowhead 698
Yellowhead 699
Yellowhead 700
Yellowhead 701
Yellowhead 702
Yellowhead 703
Yellowhead 704
Yellowhead 705
Yellowhead 706
Yellowhead 707
Yellowhead 708
Yellowhead 709
Yellowhead 710
Yellowhead 711
Yellowhead 712
Yellowhead 713
Yellowhead 714
Yellowhead 715
Yellowhead 716
Yellowhead 717
Yellowhead 718
Yellowhead 719
Yellowhead 720
Yellowhead 721
Yellowhead 722
Yellowhead 723
Yellowhead 724
Yellowhead 725
Yellowhead 726
Yellowhead 727
Yellowhead 728
Yellowhead 729
Yellowhead 730
Yellowhead 731
Yellowhead 732
Yellowhead 733
Yellowhead 734
Yellowhead 735
Yellowhead 736
Yellowhead 737
Yellowhead 738
Yellowhead 739
Yellowhead 740
Yellowhead 741
Yellowhead 742
Yellowhead 743
Yellowhead 744
Yellowhead 745
Yellowhead 746
Yellowhead 747
Yellowhead 748
Yellowhead 749
Yellowhead 750
Yellowhead 751
Yellowhead 752
Yellowhead 753
Yellowhead 754
Yellowhead 755
Yellowhead 756
Yellowhead 757
Yellowhead 758
Yellowhead 759
Yellowhead 760
Yellowhead 761
Yellowhead 762
Yellowhead 763
Yellowhead 764
Yellowhead 765
Yellowhead 766
Yellowhead 767
Yellowhead 768
Yellowhead 769
Yellowhead 770
Yellowhead 771
Yellowhead 772
Yellowhead 773
Yellowhead 774
Yellowhead 775
Yellowhead 776
Yellowhead 777
Yellowhead 778
Yellowhead 779
Yellowhead 780
Yellowhead 781
Yellowhead 782
Yellowhead 783
Yellowhead 784
Yellowhead 785
Yellowhead 786
Yellowhead 787
Yellowhead 788
Yellowhead 789
Yellowhead 790
Yellowhead 791
Yellowhead 792
Yellowhead 793
Yellowhead 794
Yellowhead 795
Yellowhead 796
Yellowhead 797
Yellowhead 798
Yellowhead 799
Yellowhead 800
Yellowhead 801
Yellowhead 802
Yellowhead 803
Yellowhead 804
Yellowhead 805
Yellowhead 806
Yellowhead 807
Yellowhead 808
Yellowhead 809
Yellowhead 810
Yellowhead 811
Yellowhead 812
Yellowhead 813
Yellowhead 814
Yellowhead 815
Yellowhead 816
Yellowhead 817
Yellowhead 818
Yellowhead 819
Yellowhead 820
Yellowhead 821
Yellowhead 822
Yellowhead 823
Yellowhead 824
Yellowhead 825
Yellowhead 826
Yellowhead 827
Yellowhead 828
Yellowhead 829
Yellowhead 830
Yellowhead 831
Yellowhead 832
Yellowhead 833
Yellowhead 834
Yellowhead 835
Yellowhead 836
Yellowhead 837
Yellowhead 838
Yellowhead 839
Yellowhead 840
Yellowhead 841
Yellowhead 842
Yellowhead 843
Yellowhead 844
Yellowhead 845
Yellowhead 846
Yellowhead 847
Yellowhead 848
Yellowhead 849
Yellowhead 850
Yellowhead 851
Yellowhead 852
Yellowhead 853
Yellowhead 854
Yellowhead 855
Yellowhead 856
Yellowhead 857
Yellowhead 858
Yellowhead 859
Yellowhead 860
Yellowhead 861
Yellowhead 862
Yellowhead 863
Yellowhead 864
Yellowhead 865
Yellowhead 866
Yellowhead 867
Yellowhead 868
Yellowhead 869
Yellowhead 870
Yellowhead 871
Yellowhead 872
Yellowhead 873
Yellowhead 874
Yellowhead 875
Yellowhead 876
Yellowhead 877
Yellowhead 878
Yellowhead 879
Yellowhead 880
Yellowhead 881
Yellowhead 882
Yellowhead 883
Yellowhead 884
Yellowhead 885
Yellowhead 886
Yellowhead 887
Yellowhead 888
Yellowhead 889
Yellowhead 890
Yellowhead 891
Yellowhead 892
Yellowhead 893
Yellowhead 894
Yellowhead 895
Yellowhead 896
Yellowhead 897
Yellowhead 898
Yellowhead 899
Yellowhead 900
Yellowhead 901
Yellowhead 902
Yellowhead 903
Yellowhead 904
Yellowhead 905
Yellowhead 906
Yellowhead 907
Yellowhead 908
Yellowhead 909
Yellowhead 910
Yellowhead 911
Yellowhead 912
Yellowhead 913
Yellowhead 914
Yellowhead 915
Yellowhead 916
Yellowhead 917
Yellowhead 918
Yellowhead 919
Yellowhead 920
Yellowhead 921
Yellowhead 922
Yellowhead 923
Yellowhead 924
Yellowhead 925
Yellowhead 926
Yellowhead 927
Yellowhead 928
Yellowhead 929
Yellowhead 930
Yellowhead 931
Yellowhead 932
Yellowhead 933
Yellowhead 934
Yellowhead 935
Yellowhead 936
Yellowhead 937
Yellowhead 938
Yellowhead 939
Yellowhead 940
Yellowhead 941
Yellowhead 942
Yellowhead 943
Yellowhead 944
Yellowhead 945
Yellowhead 946
Yellowhead 947
Yellowhead 948
Yellowhead 949
Yellowhead 950
Yellowhead 951
Yellowhead 952
Yellowhead 953
Yellowhead 954
Yellowhead 955
Yellowhead 956
Yellowhead 957
Yellowhead 958
Yellowhead 959
Yellowhead 960
Yellowhead 961
Yellowhead 962
Yellowhead 963
Yellowhead 964
Yellowhead 965
Yellowhead 966
Yellowhead 967
Yellowhead 968
Yellowhead 969
Yellowhead 970
Yellowhead 971
Yellowhead 972
Yellowhead 973
Yellowhead 974
Yellowhead 975
Yellowhead 976
Yellowhead 977
Yellowhead 978
Yellowhead 979
Yellowhead 980
Yellowhead 981
Yellowhead 982
Yellowhead 983
Yellowhead 984
Yellowhead 985
Yellowhead 986
Yellowhead 987
Yellowhead 988
Yellowhead 989
Yellowhead 990
Yellowhead 991
Yellowhead 992
Yellowhead 993
Yellowhead 994
Yellowhead 995
Yellowhead 996
Yellowhead 997
Yellowhead 998
Yellowhead 999
Yellowhead 1000
Yellowhead 1001
Yellowhead 1002
Yellowhead 1003
Yellowhead 1004
Yellowhead 1005
Yellowhead 1006
Yellowhead 1007
Yellowhead 1008
Yellowhead 1009
Yellowhead 1010
Yellowhead 1011
Yellowhead 1012
Yellowhead 1013
Yellowhead 1014
Yellowhead 1015
Yellowhead 1016
Yellowhead 1017
Yellowhead 1018
Yellowhead 1019
Yellowhead 1020
Yellowhead 1021
Yellowhead 1022
Yellowhead 1023
Yellowhead 1024
Yellowhead 1025
Yellowhead 1026
Yellowhead 1027
Yellowhead 1028
Yellowhead 1029
Yellowhead 1030
Yellowhead 1031
Yellowhead 1032
Yellowhead 1033
Yellowhead 1034
Yellowhead 1035
Yellowhead 1036
Yellowhead 1037
Yellowhead 1038
Yellowhead 1039
Yellowhead 1040
Yellowhead 1041
Yellowhead 1042
Yellowhead 1043
Yellowhead 1044
Yellowhead 1045
Yellowhead 1046
Yellowhead 1047
Yellowhead 1048
Yellowhead 1049
Yellowhead 1050
Yellowhead 1051
Yellowhead 1052
Yellowhead 1053
Yellowhead 1054
Yellowhead 1055
Yellowhead 1056
Yellowhead 1057
Yellowhead 1058
Yellowhead 1059
Yellowhead 1060
Yellowhead 1061
Yellowhead 1062
Yellowhead 1063
Yellowhead 1064
Yellowhead 1065
Yellowhead 1066
Yellowhead 1067
Yellowhead 1068
Yellowhead 1069
Yellowhead 1070
Yellowhead 1071
Yellowhead 1072
Yellowhead 1073
Yellowhead 1074
Yellowhead 1075
Yellowhead 1076
Yellowhead 1077
Yellowhead 1078
Yellowhead 1079
Yellowhead 1080
Yellowhead 1081
Yellowhead 1082
Yellowhead 1083
Yellowhead 1084
Yellowhead 1085
Yellowhead 1086
Yellowhead 1087
Yellowhead 1088
Yellowhead 1089
Yellowhead 1090
Yellowhead 1091
Yellowhead 1092
Yellowhead 1093
Yellowhead 1094
Yellowhead 1095
Yellowhead 1096
Yellowhead 1097
Yellowhead 1098
Yellowhead 1099
Yellowhead 1100
Yellowhead 1101
Yellowhead 1102
Yellowhead 1103
Yellowhead 1104
Yellowhead 1105
Yellowhead 1106
Yellowhead 1107
Yellowhead 1108
Yellowhead 1109
Yellowhead 1110
Yellowhead 1111
Yellowhead 1112
Yellowhead 1113
Yellowhead 1114
Yellowhead 1115
Yellowhead 1116
Yellowhead 1117
Yellowhead 1118
Yellowhead 1119
Yellowhead 1120
Yellowhead 1121
Yellowhead 1122
Yellowhead 1123
Yellowhead 1124
Yellowhead 1125
Yellowhead 1126
Yellowhead 1127
Yellowhead 1128
Yellowhead 1129
Yellowhead 1130
Yellowhead 1131
Yellowhead 1132
Yellowhead 1133
Yellowhead 1134
Yellowhead 1135
Yellowhead 1136
Yellowhead 1137
Yellowhead 1138
Yellowhead 1139
Yellowhead 1140
Yellowhead 1141
Yellowhead 1142
Yellowhead 1143
Yellowhead 1144
Yellowhead 1145
Yellowhead 1146
Yellowhead 1147
Yellowhead 1148
Yellowhead 1149
Yellowhead 1150
Yellowhead 1151
Yellowhead 1152
Yellowhead 1153
Yellowhead 1154
Yellowhead 1155
Yellowhead 1156
Yellowhead 1157
Yellowhead 1158
Yellowhead 1159
Yellowhead 1160
Yellowhead 1161
Yellowhead 1162
Yellowhead 1163
Yellowhead 1164
Yellowhead 1165
Yellowhead 1166
Yellowhead 1167
Yellowhead 1168
Yellowhead 1169
Yellowhead 1170
Yellowhead 1171
Yellowhead 1172
Yellowhead 1173
Yellowhead 1174
Yellowhead 1175
Yellowhead 1176
Yellowhead 1177
Yellowhead 1178
Yellowhead 1179
Yellowhead 1180
Yellowhead 1181
Yellowhead 1182
Yellowhead 1183
Yellowhead 1184
Yellowhead 1185
Yellowhead 1186
Yellowhead 1187
Yellowhead 1188
Yellowhead 1189
Yellowhead 1190
Yellowhead 1191
Yellowhead 1192
Yellowhead 1193
Yellowhead 1194
Yellowhead 1195
Yellowhead 1196
Yellowhead 1197
Yellowhead 1198
Yellowhead 1199
Yellowhead 1200
Yellowhead 1201
Yellowhead 1202
Yellowhead 1203
Yellowhead 1204
Yellowhead 1205
Yellowhead 1206
Yellowhead 1207
Yellowhead 1208
Yellowhead 1209
Yellowhead 1210
Yellowhead 1211
Yellowhead 1212
Yellowhead 1213
Yellowhead 1214
Yellowhead 1215
Yellowhead 1216
Yellowhead 1217
Yellowhead 1218
Yellowhead 1219
Yellowhead 1220
Yellowhead 1221
Yellowhead 1222
Yellowhead 1223
Yellowhead 1224
Yellowhead 1225
Yellowhead 1226
Yellowhead 1227
Yellowhead 1228
Yellowhead 1229
Yellowhead 1230
Yellowhead 1231
Yellowhead 1232
Yellowhead 1233
Yellowhead 1234
Yellowhead 1235
Yellowhead 1236
Yellowhead 1237
Yellowhead 1238
Yellowhead 1239
Yellowhead 1240
Yellowhead 1241
Yellowhead 1242
Yellowhead 1243
Yellowhead 1244
Yellowhead 1245
Yellowhead 1246
Yellowhead 1247
Yellowhead 1248
Yellowhead 1249
Yellowhead 1250
Yellowhead 1251
Yellowhead 1252
Yellowhead 1253
Yellowhead 1254
Yellowhead 1255
Yellowhead 1256
Yellowhead 1257
Yellowhead 1258
Yellowhead 1259
Yellowhead 1260
Yellowhead 1261
Yellowhead 1262
Yellowhead 1263
Yellowhead 1264
Yellowhead 1265
Yellowhead 1266
Yellowhead 1267
Yellowhead 1268
Yellowhead 1269
Yellowhead 1270
Yellowhead 1271
Yellowhead 1272
Yellowhead 1273
Yellowhead 1274
Yellowhead 1275
Yellowhead 1276
Yellowhead 1277
Yellowhead 1278
Yellowhead 1279
Yellowhead 1280
Yellowhead 1281
Yellowhead 1282
Yellowhead 1283
Yellowhead 1284
Yellowhead 1285
Yellowhead 1286
Yellowhead 1287
Yellowhead 1288
Yellowhead 1289
Yellowhead 1290
Yellowhead 1291
Yellowhead 1292
Yellowhead 1293
Yellowhead 1294
Yellowhead 1295
Yellowhead 1296
Yellowhead 1297
Yellowhead 1298
Yellowhead 1299
Yellowhead 1300
Yellowhead 1301
Yellowhead 1302
Yellowhead 1303
Yellowhead 1304
Yellowhead 1305
Yellowhead 1306
Yellowhead 1307
Yellowhead 1308
Yellowhead 1309
Yellowhead 1310
Yellowhead 1311
Yellowhead 1312
Yellowhead 1313
Yellowhead 1314
Yellowhead 1315
Yellowhead 1316
Yellowhead 1317
Yellowhead 1318
Yellowhead 1319
Yellowhead 1320
Yellowhead 1321
Yellowhead 1322
Yellowhead 1323
Yellowhead 1324
Yellowhead 1325
Yellowhead 1326
Yellowhead 1327
Yellowhead 1328
Yellowhead 1329
Yellowhead 1330
Yellowhead 1331
Yellowhead 1332
Yellowhead 1333
Yellowhead 1334
Yellowhead 1335
Yellowhead 1336
Yellowhead 1337
Yellowhead 1338
Yellowhead 1339
Yellowhead 1340
Yellowhead 1341
Yellowhead 1342
Yellowhead 1343
Yellowhead 1344
Yellowhead 1345
Yellowhead 1346
Yellowhead 1347
Yellowhead 1348
Yellowhead 1349
Yellowhead 1350
Yellowhead 1351
Yellowhead 1352
Yellowhead 1353
Yellowhead 1354
Yellowhead 1355
Yellowhead 1356
Yellowhead 1357
Yellowhead 1358
Yellowhead 1359
Yellowhead 1360
Yellowhead 1361
Yellowhead 1362
Yellowhead 1363
Yellowhead 1364
Yellowhead 1365
Yellowhead 1366
Yellowhead 1367
Yellowhead 1368
Yellowhead 1369
Yellowhead 1370
Yellowhead 1371
Yellowhead 1372
Yellowhead 1373
Yellowhead 1374
Yellowhead 1375
Yellowhead 1376
Yellowhead 1377
Yellowhead 1378
Yellowhead 1379
Yellowhead 1380
Yellowhead 1381
Yellowhead 1382
Yellowhead 1383
Yellowhead 1384
Yellowhead 1385
Yellowhead 1386
Yellowhead 1387
Yellowhead 1388
Yellowhead 1389
Yellowhead 1390
Yellowhead 1391
Yellowhead 1392
Yellowhead 1393
Yellowhead 1394
Yellowhead 1395
Yellowhead 1396
Yellowhead 1397
Yellowhead 1398
Yellowhead 1399
Yellowhead 1400
Yellowhead 1401
Yellowhead 1402
Yellowhead 1403
Yellowhead 1404
Yellowhead 1405
Yellowhead 1406
Yellowhead 1407
Yellowhead 1408
Yellowhead 1409
Yellowhead 1410
Yellowhead 1411
Yellowhead 1412
Yellowhead 1413
Yellowhead 1414
Yellowhead 1415
Yellowhead 1416
Yellowhead 1417
Yellowhead 1418
Yellowhead 1419
Yellowhead 1420
Yellowhead 1421
Yellowhead 1422
Yellowhead 1423
Yellowhead 1424
Yellowhead 1425
Yellowhead 1426
Yellowhead 1427
Yellowhead 1428
Yellowhead 1429
Yellowhead 1430
Yellowhead 1431
Yellowhead 1432
Yellowhead 1433
Yellowhead 1434
Yellowhead 1435
Yellowhead 1436
Yellowhead 1437
Yellowhead 1438
Yellowhead 1439
Yellowhead 1440
Yellowhead 1441
Yellowhead 1442
Yellowhead 1443
Yellowhead 1444
Yellowhead 1445
Yellowhead 1446
Yellowhead 1447
Yellowhead 1448
Yellowhead 1449
Yellowhead 1450
Yellowhead 1451
Yellowhead 1452
Yellowhead 1453
Yellowhead 1454
Yellowhead 1455
Yellowhead 1456
Yellowhead 1457
Yellowhead 1458
Yellowhead 1459
Yellowhead 1460
Yellowhead 1461
Yellowhead 1462
Yellowhead 1463
Yellowhead 1464
Yellowhead 1465
Yellowhead 1466
Yellowhead 1467
Yellowhead 1468
Yellowhead 1469
Yellowhead 1470
Yellowhead 1471
Yellowhead 1472
Yellowhead 1473
Yellowhead 1474
Yellowhead 1475
Yellowhead 1476
Yellowhead 1477
Yellowhead 1478
Yellowhead 1479
Yellowhead 1480
Yellowhead 1481
Yellowhead 1482
Yellowhead 1483
Yellowhead 1484
Yellowhead 1485
Yellowhead 1486
Yellowhead 1487
Yellowhead 1488
Yellowhead 1489
Yellowhead 1490
Yellowhead 1491
Yellowhead 1492
Yellowhead 1493
Yellowhead 1494
Yellowhead 1495
Yellowhead 1496
Yellowhead 1497
Yellowhead 1498
Yellowhead 1499
Yellowhead 1500
Yellowhead 1501
Yellowhead 1502
Yellowhead 1503
Yellowhead 1504
Yellowhead 1505
Yellowhead 1506
Yellowhead 1507
Yellowhead 1508
Yellowhead 1509
Yellowhead 1510
Yellowhead 1511
Yellowhead 1512
Yellowhead 1513
Yellowhead 1514
Yellowhead 1515
Yellowhead 1516
Yellowhead 1517
Yellowhead 1518
Yellowhead 1519
Yellowhead 1520
Yellowhead 1521
Yellowhead 1522
Yellowhead 1523
Yellowhead 1524
Yellowhead 1525
Yellowhead 1526
Yellowhead 1527
Yellowhead 1528
Yellowhead 1529
Yellowhead 1530
Yellowhead 1531
Yellowhead 1532
Yellowhead 1533
Yellowhead 1534
Yellowhead 1535
Yellowhead 1536
Yellowhead 1537
Yellowhead 1538
Yellowhead 1539
Yellowhead 1540
Yellowhead 1541
Yellowhead 1542
Yellowhead 1543
Yellowhead 1544
Yellowhead 1545
Yellowhead 1546
Yellowhead 1547
Yellowhead 1548
Yellowhead 1549
Yellowhead 1550
Yellowhead 1551
Yellowhead 1552
Yellowhead 1553
Yellowhead 1554
Yellowhead 1555
Yellowhead 1556
Yellowhead 1557
Yellowhead 1558
Yellowhead 1559
Yellowhead 1560
Yellowhead 1561
Yellowhead 1562
Yellowhead 1563
Yellowhead 1564
Yellowhead 1565
Yellowhead 1566
Yellowhead 1567
Yellowhead 1568
Yellowhead 1569
Yellowhead 1570
Yellowhead 1571
Yellowhead 1572
Yellowhead 1573
Yellowhead 1574
Yellowhead 1575
Yellowhead 1576
Yellowhead 1577
Yellowhead 1578
Yellowhead 1579
Yellowhead 1580
Yellowhead 1581
Yellowhead 1582
Yellowhead 1583
Yellowhead 1584
Yellowhead 1585
Yellowhead 1586
Yellowhead 1587
Yellowhead 1588
Yellowhead 1589
Yellow

Figure A2-19: 2019 Summer Peak Pre-Project Case A - Contingency of EATL (Newell 2075S - Heathfield 2029S)

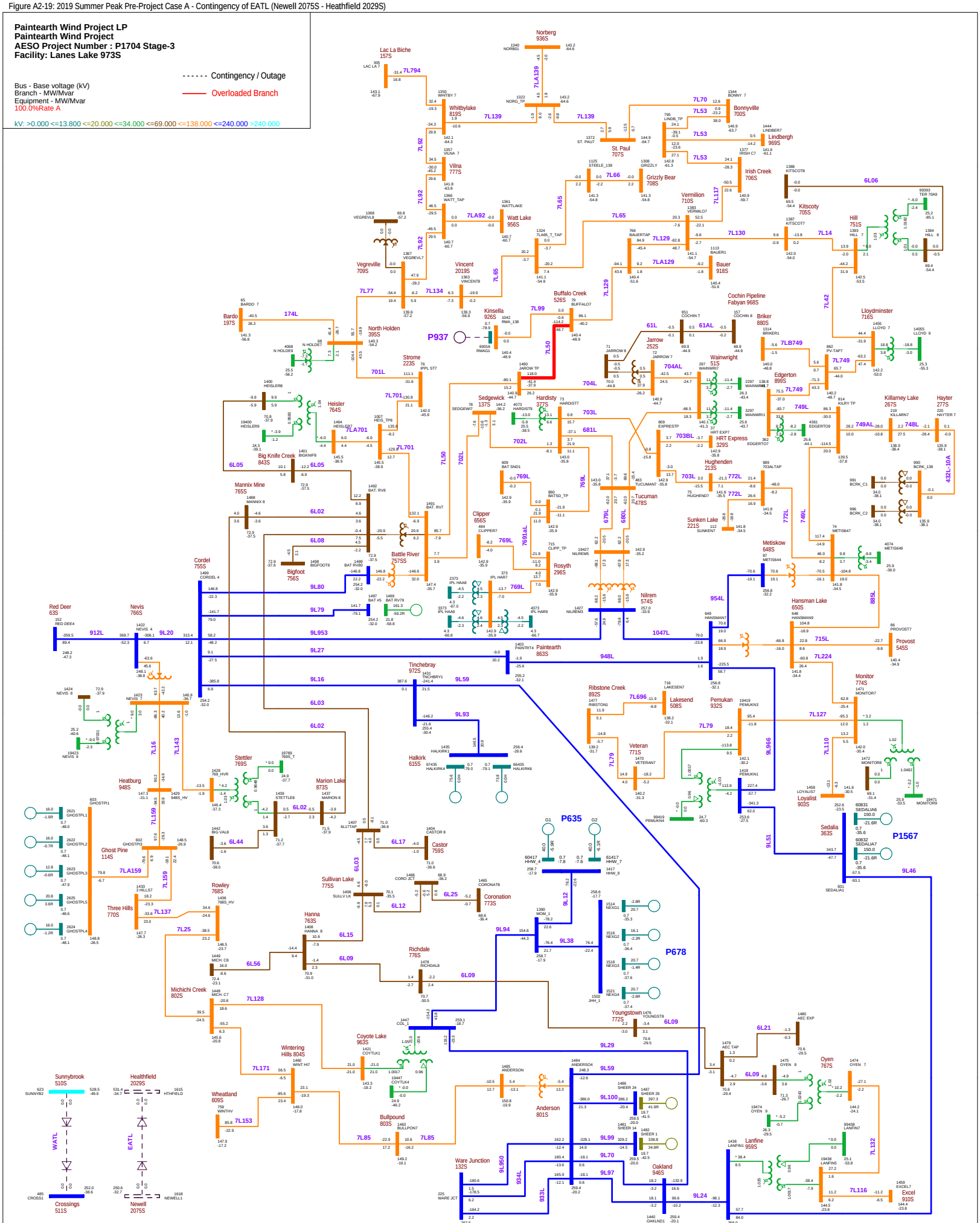

Figure A2-20: 2019 Summer Peak Pre-Project Case A - Contingency of 7L701\7LA701\701L (Battle River 757S - Heisler 764S - Strome 223S)

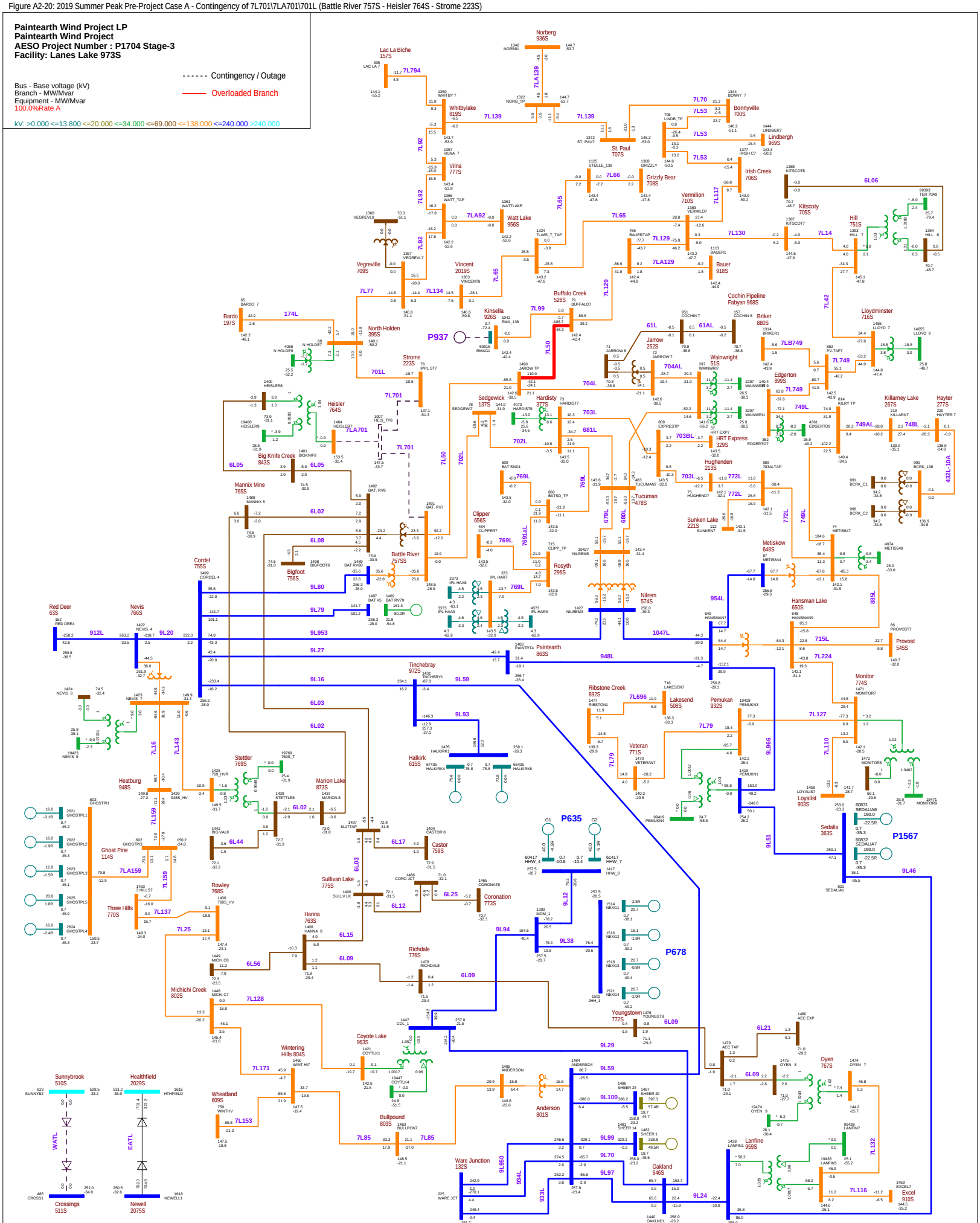

Figure A2-21: 2019 Summer Peak Pre-Project Case A - Contingency of 749L\749AL (Metiskow 648S - Edgerton 899S)

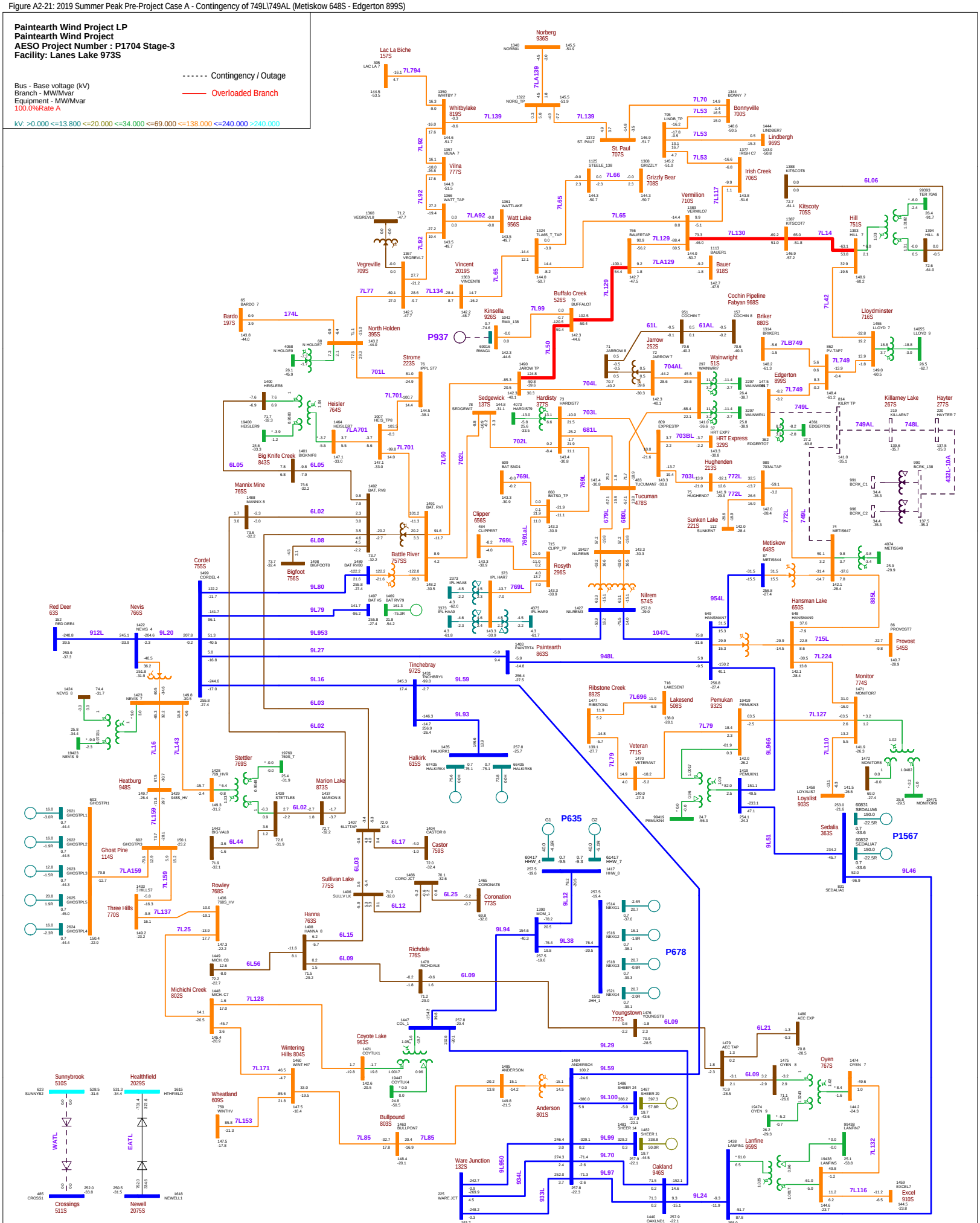
Paintearth Wind Project LP
Paintearth Wind Project
AESO Project Number : P1704 Stage-3
Facility: Lanes Lake 973S
Contingency / Outage
Overloaded Branch
Bus - Base voltage (kV)
Branch - MW/Mvar
Equipment - MW/Mvar
100.0%Rate A
kV: >0.000 <=13.800 <=20.000 <=34.000 <=69.000 <=138.000 <=240.000 >240.000
Norberg 936S
Lac La Biche 157S
Whitbylake 819S
Vilna 777S
Watt Lake 956S
Vegreville 709S
Vincent 2019S
Kinsella 926S
Buffalo Creek 526S
St. Paul 707S
Bonnyville 700S
Lindbergh 969S
Irish Creek 706S
Grizzly Bear 708S
Vermilion 710S
Kitscoty 705S
Hill 751S
Bauer 918S
Lloydminster 716S
Cochin Pipeline Fabyan 968S
Briker 880S
Wainwright 51S
Jarrow 252S
Edgerton 899S
HRT Express 329S
Hughenden 213S
Killarney Lake 267S
Hayter 277S
Bardo 197S
North Holden 395S
Strome 223S
Heisler 764S
Big Knife Creek 843S
Mannix Mine 765S
Cordel 755S
Bigfoot 756S
Battle River 757SS
Sedgewick 137S
Hardisty 377S
Clipper 656S
Tucuman 478S
Sunken Lake 221S
Metiskow 648S
Nevis 766S
Red Deer 63S
Paintearth 863S
Tinchebray 972S
Nilrem 574S
Rosyth 296S
Hansman Lake 650S
Provost 545S
Monitor 774S
Ribstone Creek 892S
Lakesend 508S
Pemukan 932S
Veteran 771S
Loyalist 903S
Sedalia 363S
Halkirk 615S
Stettler 769S
Heatburg 948S
Marion Lake 873S
Castor 759S
Ghost Pine 114S
Three Hills 770S
Rowley 768S
Sullivan Lake 775S
Coronation 773S
Hanna 763S
Richdale 776S
Michichi Creek 802S
Youngstown 772S
Oyen 767S
Anderson 801S
Ware Junction 132S
Oakland 946S
Lanfine 959S
Excel 910S
Sunnybrook 510S
Healthfield 2029S
Crossings 511S
Newell 2075S
Wheatland 609S
Wintering Hills 804S
Bullpound 803S
Coyote Lake 963S
P937
P635
P678
P1567
174L
701L
6L05
6L02
6L08
9L80
9L79
9L20
912L
9L953
9L27
9L16
6L03
9L59
9L93
6L02
7L16
7L143
7L159
7L169
6L44
6L17
6L02
6L03
6L12
6L25
6L15
6L09
6L56
7L25
7L128
7L137
7L171
7L153
7L85
9L94
9L38
9L12
9L29
9L59
9L100
9L99
9L70
9L97
9L24
9L950
934L
933L
6L21
6L09
7L132
7L116
7L92
7L65
7L66
7L117
7L130
7L14
6L06
7L42
7L129
7L50
7L99
7L65
7L66
7L77
7L134
7L701
7L702
7L703
7L704
7L705
7L706
7L707
7L708
7L709
7L710
7L711
7L712
7L713
7L714
7L715
7L716
7L717
7L718
7L719
7L720
7L721
7L722
7L723
7L724
7L725
7L726
7L727
7L728
7L729
7L730
7L731
7L732
7L733
7L734
7L735
7L736
7L737
7L738
7L739
7L740
7L741
7L742
7L743
7L744
7L745
7L746
7L747
7L748
7L749
7L750
7L751
7L752
7L753
7L754
7L755
7L756
7L757
7L758
7L759
7L760
7L761
7L762
7L763
7L764
7L765
7L766
7L767
7L768
7L769
7L770
7L771
7L772
7L773
7L774
7L775
7L776
7L777
7L778
7L779
7L780
7L781
7L782
7L783
7L784
7L785
7L786
7L787
7L788
7L789
7L790
7L791
7L792
7L793
7L794
7L795
7L796
7L797
7L798
7L799
7L800
7L801
7L802
7L803
7L804
7L805
7L806
7L807
7L808
7L809
7L810
7L811
7L812
7L813
7L814
7L815
7L816
7L817
7L818
7L819
7L820
7L821
7L822
7L823
7L824
7L825
7L826
7L827
7L828
7L829
7L830
7L831
7L832
7L833
7L834
7L835
7L836
7L837
7L838
7L839
7L840
7L841
7L842
7L843
7L844
7L845
7L846
7L847
7L848
7L849
7L850
7L851
7L852
7L853
7L854
7L855
7L856
7L857
7L858
7L859
7L860
7L861
7L862
7L863
7L864
7L865
7L866
7L867
7L868
7L869
7L870
7L871
7L872
7L873
7L874
7L875
7L876
7L877
7L878
7L879
7L880
7L881
7L882
7L883
7L884
7L885
7L886
7L887
7L888
7L889
7L890
7L891
7L892
7L893
7L894
7L895
7L896
7L897
7L898
7L899
7L900
7L901
7L902
7L903
7L904
7L905
7L906
7L907
7L908
7L909
7L910
7L911
7L912
7L913
7L914
7L915
7L916
7L917
7L918
7L919
7L920
7L921
7L922
7L923
7L924
7L925
7L926
7L927
7L928
7L929
7L930
7L931
7L932
7L933
7L934
7L935
7L936
7L937
7L938
7L939
7L940
7L941
7L942
7L943
7L944
7L945
7L946
7L947
7L948
7L949
7L950
7L951
7L952
7L953
7L954
7L955
7L956
7L957
7L958
7L959
7L960
7L961
7L962
7L963
7L964
7L965
7L966
7L967
7L968
7L969
7L970
7L971
7L972
7L973
7L974
7L975
7L976
7L977
7L978
7L979
7L980
7L981
7L982
7L983
7L984
7L985
7L986
7L987
7L988
7L989
7L990
7L991
7L992
7L993
7L994
7L995
7L996
7L997
7L998
7L999
7L1000
7L1001
7L1002
7L1003
7L1004
7L1005
7L1006
7L1007
7L1008
7L1009
7L1010
7L1011
7L1012
7L1013
7L1014
7L1015
7L1016
7L1017
7L1018
7L1019
7L1020
7L1021
7L1022
7L1023
7L1024
7L1025
7L1026
7L1027
7L1028
7L1029
7L1030
7L1031
7L1032
7L1033
7L1034
7L1035
7L1036
7L1037
7L1038
7L1039
7L1040
7L1041
7L1042
7L1043
7L1044
7L1045
7L1046
7L1047
7L1048
7L1049
7L1050
7L1051
7L1052
7L1053
7L1054
7L1055
7L1056
7L1057
7L1058
7L1059
7L1060
7L1061
7L1062
7L1063
7L1064
7L1065
7L1066
7L1067
7L1068
7L1069
7L1070
7L1071
7L1072
7L1073
7L1074
7L1075
7L1076
7L1077
7L1078
7L1079
7L1080
7L1081
7L1082
7L1083
7L1084
7L1085
7L1086
7L1087
7L1088
7L1089
7L1090
7L1091
7L1092
7L1093
7L1094
7L1095
7L1096
7L1097
7L1098
7L1099
7L1100
7L1101
7L1102
7L1103
7L1104
7L1105
7L1106
7L1107
7L1108
7L1109
7L1110
7L1111
7L1112
7L1113
7L1114
7L1115
7L1116
7L1117
7L1118
7L1119
7L1120
7L1121
7L1122
7L1123
7L1124
7L1125
7L1126
7L1127
7L1128
7L1129
7L1130
7L1131
7L1132
7L1133
7L1134
7L1135
7L1136
7L1137
7L1138
7L1139
7L1140
7L1141
7L1142
7L1143
7L1144
7L1145
7L1146
7L1147
7L1148
7L1149
7L1150
7L1151
7L1152
7L1153
7L1154
7L1155
7L1156
7L1157
7L1158
7L1159
7L1160
7L1161
7L1162
7L1163
7L1164
7L1165
7L1166
7L1167
7L1168
7L1169
7L1170
7L1171
7L1172
7L1173
7L1174
7L1175
7L1176
7L1177
7L1178
7L1179
7L1180
7L1181
7L1182
7L1183
7L1184
7L1185
7L1186
7L1187
7L1188
7L1189
7L1190
7L1191
7L1192
7L1193
7L1194
7L1195
7L1196
7L1197
7L1198
7L1199
7L1200
7L1201
7L1202
7L1203
7L1204
7L1205
7L1206
7L1207
7L1208
7L1209
7L1210
7L1211
7L1212
7L1213
7L1214
7L1215
7L1216
7L1217
7L1218
7L1219
7L1220
7L1221
7L1222
7L1223
7L1224
7L1225
7L1226
7L1227
7L1228
7L1229
7L1230
7L1231
7L1232
7L1233
7L1234
7L1235
7L1236
7L1237
7L1238
7L1239
7L1240
7L1241
7L1242
7L1243
7L1244
7L1245
7L1246
7L1247
7L1248
7L1249
7L1250
7L1251
7L1252
7L1253
7L1254
7L1255
7L1256
7L1257
7L1258
7L1259
7L1260
7L1261
7L1262
7L1263
7L1264
7L1265
7L1266
7L1267
7L1268
7L1269
7L1270
7L1271
7L1272
7L1273
7L1274
7L1275
7L1276
7L1277
7L1278
7L1279
7L1280
7L1281
7L1282
7L1283
7L1284
7L1285
7L1286
7L1287
7L1288
7L1289
7L1290
7L1291
7L1292
7L1293
7L1294
7L1295
7L1296
7L1297
7L1298
7L1299
7L1300
7L1301
7L1302
7L1303
7L1304
7L1305
7L1306
7L1307
7L1308
7L1309
7L1310
7L1311
7L1312
7L1313
7L1314
7L1315
7L1316
7L1317
7L1318
7L1319
7L1320
7L1321
7L1322
7L1323
7L1324
7L1325
7L1326
7L1327
7L1328
7L1329
7L1330
7L1331
7L1332
7L1333
7L1334
7L1335
7L1336
7L1337
7L1338
7L1339
7L1340
7L1341
7L1342
7L1343
7L1344
7L1345
7L1346
7L1347
7L1348
7L1349
7L1350
7L1351
7L1352
7L1353
7L1354
7L1355
7L1356
7L1357
7L1358
7L1359
7L1360
7L1361
7L1362
7L1363
7L1364
7L1365
7L1366
7L1367
7L1368
7L1369
7L1370
7L1371
7L1372
7L1373
7L1374
7L1375
7L1376
7L1377
7L1378
7L1379
7L1380
7L1381
7L1382
7L1383
7L1384
7L1385
7L1386
7L1387
7L1388
7L1389
7L1390
7L1391
7L1392
7L1393
7L1394
7L1395
7L1396
7L1397
7L1398
7L1399
7L1400
7L1401
7L1402
7L1403
7L1404
7L1405
7L1406
7L1407
7L1408
7L1409
7L1410
7L1411
7L1412
7L1413
7L1414
7L1415
7L1416
7L1417
7L1418
7L1419
7L1420
7L1421
7L1422
7L1423
7L1424
7L1425
7L1426
7L1427
7L1428
7L1429
7L1430
7L1431
7L1432
7L1433
7L1434
7L1435
7L1436
7L1437
7L1438
7L1439
7L1440
7L1441
7L1442
7L1443
7L1444
7L1445
7L1446
7L1447
7L1448
7L1449
7L1450
7L1451
7L1452
7L1453
7L1454
7L1455
7L1456
7L1457
7L1458
7L1459
7L1460
7L1461
7L1462
7L1463
7L1464
7L1465
7L1466
7L1467
7L1468
7L1469
7L1470
7L1471
7L1472
7L1473
7L1474
7L1475
7L1476
7L1477
7L1478
7L1479
7L1480
7L1481
7L1482
7L1483
7L1484
7L1485
7L1486
7L1487
7L1488
7L1489
7L1490
7L1491
7L1492
7L1493
7L1494
7L1495
7L1496
7L1497
7L1498
7L1499
7L1500
7L1501
7L1502
7L1503
7L1504
7L1505
7L1506
7L1507
7L1508
7L1509
7L1510
7L1511
7L1512
7L1513
7L1514
7L1515
7L1516
7L1517
7L1518
7L1519
7L1520
7L1521
7L1522
7L1523
7L1524
7L1525
7L1526
7L1527
7L1528
7L1529
7L1530
7L1531
7L1532
7L1533
7L1534
7L1535
7L1536
7L1537
7L1538
7L1539
7L1540
7L1541
7L1542
7L1543
7L1544
7L1545
7L1546
7L1547
7L1548
7L1549
7L1550
7L1551
7L1552
7L1553
7L1554
7L1555
7L1556
7L1557
7L1558
7L1559
7L1560
7L1561
7L1562
7L1563
7L1564
7L1565
7L1566
7L1567
7L1568
7L1569
7L1570
7L1571
7L1572
7L1573
7L1574
7L1575
7L1576
7L1577
7L1578
7L1579
7L1580
7L1581
7L1582
7L1583
7L1584
7L1585
7L1586
7L1587
7L1588
7L1589
7L1590
7L1591
7L1592
7L1593
7L1594
7L1595
7L1596
7L1597
7L1598
7L1599
7L1600
7L1601
7L1602
7L1603
7L1604
7L1605
7L1606
7L1607
7L1608
7L1609
7L1610
7L1611
7L1612
7L1613
7L1614
7L1615
7L1616
7L1617
7L1618
7L1619
7L1620
7L1621
7L1622
7L1623
7L1624
7L1625
7L1626
7L1627
7L1628
7L1629
7L1630
7L1631
7L1632
7L1633
7L1634
7L1635
7L1636
7L1637
7L1638
7L1639
7L1640
7L1641
7L1642
7L1643
7L1644
7L1645
7L1646
7L1647
7L1648
7L1649
7L1650
7L1651
7L1652
7L1653
7L1654
7L1655
7L1656
7L1657
7L1658
7L1659
7L1660
7L1661
7L1662
7L1663
7L1664
7L1665
7L1666
7L1667
7L1668
7L1669
7L1670
7L1671
7L1672
7L1673
7L1674
7L1675
7L1676
7L1677
7L1678
7L1679
7L1680
7L1681
7L1682
7L1683
7L1684
7L1685
7L1686
7L1687
7L1688
7L1689
7L1690
7L1691
7L1692
7L1693
7L1694
7L1695
7L1696
7L1697
7L1698
7L1699
7L1700
7L1701
7L1702
7L1703
7L1704
7L1705
7L1706
7L1707
7L1708
7L1709
7L1710
7L1711
7L1712
7L1713
7L1714
7L1715
7L1716
7L1717
7L1718
7L1719
7L1720
7L1721
7L1722
7L1723
7L1724
7L1725
7L1726
7L1727
7L1728
7L1729
7L1730
7L1731
7L1732
7L1733
7L1734
7L1735
7L1736
7L1737
7L1738
7L1739
7L1740
7L1741
7L1742
7L1743
7L1744
7L1745
7L1746
7L1747
7L1748
7L1749
7L1750
7L1751
7L1752
7L1753
7L1754
7L1755
7L1756
7L1757
7L1758
7L1759
7L1760
7L1761
7L1762
7L1763
7L1764
7L1765
7L1766
7L1767
7L1768
7L1769
7L1770
7L1771
7L1772
7L1773
7L1774
7L1775
7L1776
7L1777
7L1778
7L1779
7L1780
7L1781
7L1782
7L1783
7L1784
7L1785
7L1786
7L1787
7L1788
7L1789
7L1790
7L1791
7L1792
7L1793
7L1794
7L1795
7L1796
7L1797
7L1798
7L1799
7L1800
7L1801
7L1802
7L1803
7L1804
7L1805
7L1806
7L1807
7L1808
7L1809
7L1810
7L1811
7L1812
7L1813
7L1814
7L1815
7L1816
7L1817
7L1818
7L1819
7L1820
7L1821
7L1822
7L1823
7L1824
7L1825
7L1826
7L1827
7L1828
7L1829
7L1830
7L1831
7L1832
7L1833
7L1834
7L1835
7L1836
7L1837
7L1838
7L1839
7L1840
7L1841
7L1842
7L1843
7L1844
7L1845
7L1846
7L1847
7L1848
7L1849
7L1850
7L1851
7L1852
7L1853
7L1854
7L1855
7L1856
7L1857
7L1858
7L1859
7L1860
7L1861
7L1862
7L1863
7L1864
7L1865
7L1866
7L1867
7L1868
7L1869
7L1870
7L1871
7L1872
7L1873
7L1874
7L1875
7L1876
7L1877
7L1878
7L1879
7L1880
7L1881
7L1882
7L1883
7L1884
7L1885
7L1886
7L1887
7L1888
7L1889
7L1890
7L1891
7L1892
7L1893
7L1894
7L1895
7L1896
7L1897
7L1898
7L1899
7L1900
7L1901
7L1902
7L1903
7L1904
7L1905
7L1906
7L1907
7L1908
7L1909
7L1910
7L1911
7L1912
7L1913
7L1914
7L1915
7L1916
7L1917
7L1918
7L1919
7L1920
7L1921
7L1922
7L1923
7L1924
7L1925
7L1926
7L1927
7L1928
7L1929
7L1930
7L1931
7L1932
7L1933
7L1934
7L1935
7L1936
7L1937
7L1938
7L1939
7L1940
7L1941
7L1942
7L1943
7L1944
7L1945
7L1946
7L1947
7L1948
7L1949
7L1950
7L1951
7L1952
7L1953
7L1954
7L1955
7L1956
7L1957
7L1958
7L1959
7L1960
7L1961
7L1962
7L1963
7L1964
7L1965
7L1966
7L1967
7L1968
7L1969
7L1970
7L1971
7L1972
7L1973
7L1974
7L1975
7L1976
7L1977
7L1978
7L1979
7L1980
7L1981
7L1982
7L1983
7L1984
7L1985
7L1986
7L1987
7L1988
7L1989
7L1990
7L1991
7L1992
7L1993
7L1994
7L1995
7L1996
7L1997
7L1998
7L1999
7L2000
7L2001
7L2002
7L2003
7L2004
7L2005
7L2006
7L2007
7L2008
7L2009
7L2010
7L2011
7L2012
7L2013
7L2014
7L2015
7L2016
7L2017
7L2018
7L2019
7L2020
7L2021
7L2022
7L2023
7L2024
7L2025
7L2026
7L2027
7L2028
7L2029
7L2030
7L2031
7L2032
7L2033
7L2034
7L2035
7L2036
7L2037
7L2038
7L2039
7L2040
7L2041
7L2042
7L2043
7L2044
7L2045
7L2046
7L2047
7L2048
7L2049
7L2050
7L2051
7L2052
7L2053
7L2054
7L2055
7L2056
7L2057
7L2058
7L2059
7L2060
7L2061
7L2062
7L2063
7L2064
7L2065
7L2066
7L2067
7L2068
7L2069
7L2070
7L2071
7L2072
7L2073
7L2074
7L2075
7L2076
7L2077
7L2078
7L2079
7L2080
7L2081
7L2082
7L2083
7L2084
7L2085
7L2086
7L2087
7L2088
7L2089
7L2090
7L2091
7L2092
7L2093
7L2094
7L2095
7L2096
7L2097
7L2098
7L2099
7L2100
7L2101
7L2102
7L2103
7L2104
7L2105
7L2106
7L2107
7L2108
7L2109
7L2110
7L2111
7L2112
7L2113
7L2114
7L2115
7L2116
7L2117
7L2118
7L2119
7L2120
7L2121
7L2122
7L2123
7L2124
7L2125
7L2126
7L2127
7L2128
7L2129
7L2130
7L2131
7L2132
7L2133
7L2134
7L2135
7L2136
7L2137
7L2138
7L2139
7L2140
7L2141
7L2142
7L2143
7L2144
7L2145
7L2146
7L2147
7L2148
7L2149
7L2150
7L2151
7L2152
7L2153
7L2154
7L2155
7L2156
7L2157
7L2158
7L2159
7L2160
7L2161
7L2162
7L2163
7L2164
7L2165
7L2166
7L2167
7L2168
7L2169
7L2170
7L2171
7L2172
7L2173
7L2174
7L2175
7L2176
7L2177
7L2178
7L2179
7L2180
7L2181
7L2182
7L2183
7L2184
7L2185
7L2186
7L2187
7L2188
7L2189
7L2190
7L2191
7L2192
7L2193
7L2194
7L2195
7L2196
7L2197
7L2198
7L2199
7L2200
7L2201
7L2202
7L2203
7L2204
7L2205
7L2206
7L2207
7L2208
7L2209
7L2210
7L2211
7L2212
7L2213
7L2214
7L2215
7L2216
7L2217
7L2218
7L2219
7L2220
7L2221
7L2222
7L2223
7L2224
7L2225
7L2226
7L2227
7L2228
7L2229
7L2230
7L2231
7L2232
7L2233
7L2234
7L2235
7L2236
7L2237
7L2238
7L2239
7L2240
7L2241
7L2242
7L2243
7L2244
7L2245
7L2246
7L2247
7L2248
7L2249
7L2250
7L2251
7L2252
7L2253
7L2254
7L2255
7L2256
7L2257
7L2258
7L2259
7L2260
7L2261
7L2262
7L2263
7L2264
7L2265
7L2266
7L2267
7L2268
7L2269
7L2270
7L2271
7L2272
7L2273
7L2274
7L2275
7L2276
7L2277
7L2278
7L2279
7L2280
7L2281
7L2282
7L2283
7L2284
7L2285
7L2286
7L2287
7L2288
7L2289
7L2290
7L2291
7L2292
7L2293
7L2294
7L2295
7L2296
7L2297
7L2298
7L2299
7L2300
7L2301
7L2302
7L2303
7L2304
7L2305
7L2306
7L2307
7L2308
7L2309
7L2310
7L2311
7L2312
7L2313
7L2314
7L2315
7L2316
7L2317
7L2318
7L2319
7L2320
7L2321
7L2322
7L2323
7L2324
7L2325
7L2326
7L2327
7L2328
7L2329
7L2330
7L2331
7L2332
7L2333
7L2334
7L2335
7L2336
7L2337
7L2338
7L2339
7L2340
7L2341
7L2342
7L2343
7L2344
7L2345
7L2346
7L2347
7L2348
7L2349
7L2350
7L2351
7L2352
7L2353
7L2354
7L2355
7L2356
7L2357
7L2358
7L2359
7L2360
7L2361
7L2362
7L2363
7L2364
7L2365
7L2366
7L2367
7L2368
7L2369
7L2370
7L2371
7L2372
7L2373
7L2374
7L2375
7L2376
7L2377
7L2378
7L2379
7L2380
7L2381
7L2382
7L2383
7L2384
7L2385
7L2386
7L2387
7L2388
7L2389
7L2390
7L2391
7L2392
7L2393
7L2394
7L2395
7L2396
7L2397
7L2398
7L2399
7L2400
7L2401
7L2402
7L2403
7L2404
7L2405
7L2406
7L2407
7L2408
7L2409
7L2410
7L2411
7L2412
7L2413
7L2414
7L2415
7L2416
7L2417
7L2418
7L2419
7L2420
7L2421
7L2422
7L2423
7L2424
7L2425
7L2426
7L2427
7L2428
7L2429
7L2430
7L2431
7L2432
7L2433
7L2434
7L2435
7L2436
7L2437
7L2438
7L2439
7L2440
7L2441
7L2442
7L2443
7L2444
7L2445
7L2446
7L2447
7L2448
7L2449
7L2450
7L2451
7L2452
7L2453
7L2454
7L2455
7L2456
7L2457
7L2458
7L2459
7L2460
7L2461
7L2462
7L2463
7L2464
7L2465
7L2466
7L2467
7L2468
7L2469
7L2470
7L2471
7L2472
7L2473
7L2474
7L2475
7L2476
7L2477
7L2478
7L2479
7L2480
7L2481
7L2482
7L2483
7L2484
7L2485
7L2486
7L2487
7L2488
7L2489
7L2490
7L2491
7L2492
7L2493
7L2494
7L2495
7L2496
7L2497
7L2498
7L2499
7L2500
7L2501
7L2502
7L2503
7L2504
7L2505
7L2506
7L2507
7L2508
7L2509
7L2510
7L2511
7L2512
7L2513
7L2514
7L2515
7L2516
7L2517
7L2518
7L2519
7L2520
7L2521
7L2522
7L2523
7L2524
7L2525
7L2526
7L2527
7L2528
7L2529
7L2530
7L2531
7L2532
7L2533
7L2534
7L2535
7L2536
7L2537
7L2538
7L2539
7L2540
7L2541
7L2542
7L2543
7L2544
7L2545
7L2546
7L2547
7L2548
7L2549
7L2550
7L2551
7L2552
7L2553
7L2554
7L2555
7L2556
7L2557
7L2558
7L2559
7L2560
7L2561
7L2562
7L2563
7L2564
7L2565
7L2566
7L2567
7L2568
7L2569
7L2570
7L2571
7L2572
7L2573
7L2574
7L2575
7L2576
7L2577
7L2578
7L2579
7L2580
7L2581
7L2582
7L2583
7L2584
7L2585
7L2586
7L2587
7L2588
7L2589
7L2590
7L2591
7L2592
7L2593
7L2594
7L2595
7L2596
7L2597
7L2598
7L2599
7L2600
7L2601
7L2602
7L2603
7L2604
7L2605
7L2606
7L2607
7L2608
7L2609
7L2610
7L2611
7L2612
7L2613
7L2614
7L2615
7L2616
7L2617
7L2618
7L2619
7L2620
7L2621
7L2622
7L2623
7L2624
7L2625
7L2626
7L2627
7L2628
7L2629
7L2630
7L2631
7L2632
7L2633
7L2634
7L2635
7L2636
7L2637
7L2638
7L2639
7L2640
7L2641
7L2642
7L2643
7L2644
7L2645
7L2646
7L2647
7L2648
7L2649
7L2650
7L2651
7L2652
7L2653
7L2654
7L2655
7L2656
7L2657
7L2658
7L2659
7L2660
7L2661
7L2662
7L2663
7L2664
7L2665
7L2666
7L2667
7L2668
7L2669
7L2670
7L2671
7L2672
7L2673
7L2674
7L2675
7L2676
7L2677
7L2678
7L2679
7L2680
7L2681
7L2682
7L2683
7L2684
7L2685
7L2686
7L2687
7L2688
7L2689
7L2690
7L2691
7L2692
7L2693
7L2694
7L2695
7L2696
7L2697
7L2698
7L2699
7L2700
7L2701
7L2702
7L2703
7L2704
7L2705
7L2706
7L2707
7L2708
7L2709
7L2710
7L2711
7L2712
7L2713
7L2714
7L2715
7L2716
7L2717
7L2718
7L2719
7L2720
7L2721
7L2722
7L2723
7L2724
7L2725
7L2726
7L2727
7L2728
7L2729
7L2730
7L2731
7L2732
7L2733
7L2734
7L2735
7L2736
7L2737
7L2738
7L2739
7L2740
7L2741
7L2742
7L2743
7L2744
7L2745
7L2746
7L2747
7L2748
7L2749
7L2750
7L2751
7L2752
7L2753
7L2754
7L2755
7L2756
7L2757
7L2758
7L2759
7L2760
7L2761
7L2762
7L2763
7L2764
7L2765
7L2766
7L2767
7L2768
7L2769
7L2770
7L2771
7L2772
7L2773
7L2774
7L2775
7L2776
7L2777
7L2778
7L2779
7L2780
7L2781
7L2782
7L2783
7L2784
7L2785
7L2786
7L2787
7L2788
7L2789
7L2790
7L2791
7L2792
7L2793
7L2794
7L2795
7L2796
7L2797
7L2798
7L2799
7L2800
7L2801
7L2802
7L2803
7L2804
7L2805
7L2806
7L2807
7L2808
7L2809
7L2810
7L2811
7L2812
7L2813
7L2814
7L2815
7L2816
7L2817
7L2818
7L2819
7L2820
7L2821
7L2822
7L2823
7L2824
7L2825
7L2826
7L2827
7L2828
7L2829
7L2830
7L2831
7L2832
7L2833
7L2834
7L2835
7L2836
7L2837
7L2838
7L2839
7L2840
7L2841
7L2842
7L2843
7L2844
7L2845
7L2846
7L2847
7L2848
7L2849
7L2850
7L2851
7L2852
7L2853
7L2854
7L2855
7L2856
7L2857
7L2858
7L2859
7L2860
7L2861
7L2862
7L2863
7L2864
7L2865
7L2866
7L2867
7L2868
7L2869
7L2870
7L2871
7L2872
7L2873
7L2874
7L2875
7L2876
7L2877
7L2878
7L2879
7L2880
7L2881
7L2882
7L2883
7L2884
7L2885
7L2886
7L2887
7L2888
7L2889
7L2890
7L2891
7L2892
7L2893
7L2894
7L2895
7L2896
7L2897
7L2898
7L2899
7L2900
7L2901
7L2902
7L2903
7L2904
7L2905
7L2906
7L2907
7L2908
7L2909
7L2910
7L2911
7L2912
7L2913
7L2914
7L2915
7L2916
7L2917
7L2918
7L2919
7L2920
7L2921
7L2922
7L2923
7L2924
7L2925
7L2926
7L2927
7L2928
7L2929
7L2930
7L2931
7L2932
7L2933
7L2934
7L2935
7L2936
7L2937
7L2938
7L2939
7L2940
7L2941
7L2942
7L2943
7L2944
7L2945
7L2946
7L2947
7L2948
7L2949
7L2950
7L2951
7L2952
7L2953
7L2954
7L2955
7L2956
7L2957
7L2958
7L2959
7L2960
7L2961
7L2962
7L2963
7L2964
7L2965
7L2966
7L2967
7L2968
7L2969
7L2970
7L2971
7L2972
7L2973
7L2974
7L2975
7L2976
7L2977
7L2978
7L2979
7L2980
7L2981
7L2982
7L2983
7L2984
7L2985
7L2986
7L2987
7L2988
7L2989
7L2990
7L2991
7L2992
7L2993
7L2994
7L2995
7L2996
7L2997
7L2998
7L2999
7L3000
7L3001
7L3002
7L3003
7L3004
7L3005
7L3006
7L3007
7L3008
7L3009
7L3010
7L3011
7L3012
7L3013
7L3014
7L3015
7L3016
7L3017
7L3018
7L3019
7L3020
7L3021
7L3022
7L3023
7L3024
7L3025
7L3026
7L3027
7L3028
7L3029
7L3030
7L3031
7L3032
7L3033
7L3034
7L3035
7L3036
7L3037
7L3038
7L3039
7L3040
7L3041
7L3042
7L3043
7L3044
7L3045
7L3046
7L3047
7L3048
7L3049
7L3050
7L3051
7L3052
7L3053
7L3054
7L3055
7L3056
7L3057
7L3058
7L3059
7L3060
7L3061
7L3062
7L3063
7L3064
7L3065
7L3066
7L3067
7L3068
7L3069
7L3070
7L3071
7L3072
7L3073
7L3074
7L3075
7L3076
7L3077
7L3078
7L3079
7L3080
7L3081
7L3082
7L3083
7L3084
7L3085
7L3086
7L3087
7L3088
7L3089
7L3090
7L3091
7L3092
7L3093
7L3094
7L3095
7L3096
7L3097
7L3098
7L3099
7L3100
7L3101
7L3102
7L3103
7L3104
7L3105
7L3106
7L3107
7L3108
7L3109
7L3110
7L3111
7L3112
7L3113
7L3114
7L3115
7L3116
7L3117
7L3118
7L3119
7L3120
7L3121
7L3122
7L3123
7L3124
7L3125
7L3126
7L3127
7L3128
7L3129
7L3130
7L3131
7L3132
7L3133
7L3134
7L3135
7L3136
7L3137
7L3138
7L3139
7L3140
7L3141
7L3142
7L3143
7L3144
7L3145
7L3146
7L3147
7L3148
7L3149
7L3150
7L3151
7L3152
7L3153
7L3154
7L3155
7L3156
7L3157
7L3158
7L3159
7L3160
7L3161
7L3162
7L3163
7L3164
7L3165
7L3166
7L3167
7L3168
7L3169
7L3170
7L3171
7L3172
7L3173
7L3174
7L3175
7L3176
7L3177
7L3178
7L3179
7L3180
7L3181
7L3182
7L3183
7L3184
7L3185
7L3186
7L3187
7L3188
7L3189
7L3190
7L3191
7L3192
7L3193
7L3194
7L3195
7L3196
7L3197
7L3198
7L3199
7L3200
7L3201
7L3202
7L3203
7L3204
7L3205
7L3206
7L3207
7L3208
7L3209
7L3210
7L3211
7L3212
7L3213
7L3214
7L3215
7L3216
7L3217
7L3218
7L3219
7L3220
7L3221
7L3222
7L3223
7L3224
7L3225
7L3226
7L3227
7L3228
7L3229
7L3230
7L3231
7L3232
7L3233
7L3234
7L3235
7L3236
7L3237
7L3238
7L3239
7L3240
7L3241
7L3242
7L3243
7L3244
7L3245
7L3246
7L3247
7L3248
7L3249
7L3250
7L3251
7L3252
7L3253
7L3254
7L3255
7L3256
7L3257
7L3258
7L3259
7L3260
7L3261
7L3262
7L3263
7L3264
7L3265
7L3266
7L3267
7L3268
7L3269
7L3270
7L3271
7L3272
7L3273
7L3274
7L3275
7L3276
7L3277
7L3278
7L3279
7L3280
7L3281
7L3282
7L3283
7L3284
7L3285
7L3286
7L3287
7L3288
7L3289
7L3290
7L3291
7L3292
7L3293
7L3294
7L3295
7L3296
7L3297
7L3298
7L3299
7L3300
7L3301
7L3302
7L3303
7L3304
7L3305
7L3306
7L3307
7L3308
7L3309
7L3310
7L3311
7L3312
7L3313
7L3314
7L3315
7L3316
7L3317
7L3318
7L3319
7L3320
7L3321
7L3322
7L3323
7L3324
7L3325
7L3326
7L3327
7L3328
7L3329
7L3330
7L3331
7L3332
7L3333
7L3334
7L3335
7L3336
7L3337
7L3338
7L3339
7L3340
7L3341
7L3342
7L3343
7L3344
7L3345
7L3346
7L3347
7L3348
7L3349
7L3350
7L3351
7L3352
7L3353
7L3354
7L3355
7L3356
7L3357
7L3358
7L3359
7L3360
7L3361
7L3362
7L3363
7L3364
7L3365
7L3366
7L3367
7L3368
7L3369
7L3370
7L3371
7L3372
7L3373
7L3374
7L3375
7L3376
7L3377
7L3378
7L3379
7L3380
7L3381
7L3382
7L3383
7L3384
7L3385
7L3386
7L3387
7L3388
7L3389
7L3390
7L3391
7L3392
7L3393
7L3394
7L3395
7L3396
7L3397
7L3398
7L3399
7L3400
7L3401
7L3402
7L3403
7L3404
7L3405
7L3406
7L3407
7L3408
7L3409
7L3410
7L3411
7L3412
7L3413
7L3414
7L3415
7L3416
7L3417
7L3418
7L3419
7L3420
7L3421
7L3422
7L3423
7L3424
7L3425
7L3426
7L3427
7L3428
7L3429
7L3430
7L3431
7L3432
7L3433
7L3434
7L3435
7L3436
7L3437
7L3438
7L3439
7L3440
7L3441
7L3442
7L3443
7L3444
7L3445
7L3446
7L3447
7L3448
7L3449
7L3450
7L3451
7L3452
7L3453
7L3454
7L3455
7L3456
7L3457
7L3458
7L3459
7L3460
7L3461
7L3462
7L3463
7L3464
7L3465
7L3466
7L3467
7L3468
7L3469
7L3470
7L3471
7L3472
7L3473
7L3474
7L3475
7L3476
7L3477
7L3478
7L3479
7L3480
7L3481
7L3482
7L3483
7L3484
7L3485
7L3486
7L3487
7L3488
7L3489
7L3490
7L3491
7L3492
7L3493
7L3494
7L3495
7L3496
7L3497
7L3498
7L3499
7L3500
7L3501
7L3502
7L3503
7L3504
7L3505
7L3506
7L3507
7L3508
7L3509
7L3510
7L3511
7L3512
7L3513
7L3514
7L3515
7L3516
7L3517
7L3518
7L3519
7L3520
7L3521
7L3522
7L3523
7L3524
7L3525
7L3526
7L3527
7L3528
7L3529
7L3530
7L3531
7L3532
7L3533
7L3534
7L3535
7L3536
7L3537
7L3538
7L3539
7L3540
7L3541
7L3542
7L3543
7L3544
7L3545
7L3546
7L3547
7L3548
7L3549
7L3550
7L3551
7L3552
7L3553
7L3554
7L3555
7L3556
7L3557
7L3558
7L3559
7L3560
7L3561
7L3562
7L3563
7L3564
7L3565
7L3566
7L3567
7L3568
7L3569
7L3570
7L3571
7L3572
7L3573
7L3574
7L3575
7L3576
7L3577
7L3578
7L3579
7L3580
7L3581
7L3582
7L3583
7L3584
7L3585
7L3586
7L3587
7L3588
7L3589
7L3590
7L3591
7L3592
7L3593
7L3594
7L3595
7L3596
7L3597
7L3598
7L3599
7L3600
7L3601
7L3602
7L3603
7L3604
7L3605
7L3606
7L3607
7L3608
7L3609
7L3610
7L3611
7L3612
7L3613
7L3614
7L3615
7L3616
7L3617
7L3618
7L3619
7L3620
7L3621
7L3622
7L3623
7L3624
7L3625
7L3626
7L3627
7L3628
7L3629
7L3630
7L3631
7L3632
7L3633
7L3634
7L3635
7L3636
7L3637
7L3638
7L3639
7L3640
7L3641
7L3642
7L3643
7L3644
7L3645
7L3646
7L3647
7L3648
7L3649
7L3650
7L3651
7L3652
7L3653
7L3654
7L3655
7L3656
7L3657
7L3658
7L3659
7L3660
7L3661
7L3662
7L3663
7L3664
7L3665
7L3666
7L3667
7L3668
7L3669
7L3670
7L3671
7L3672
7L3673
7L3674
7L3675
7L3676
7L3677
7L3678
7L3679
7L3680
7L3681
7L3682
7L3683
7L3684
7L3685
7L3686
7L3687
7L3688

Figure A2-22: 2019 Summer Peak Pre-Project Case A - Contingency of 7L50 (Battle River 757S - Jarrow 252S - Buffalo Creek 526S)

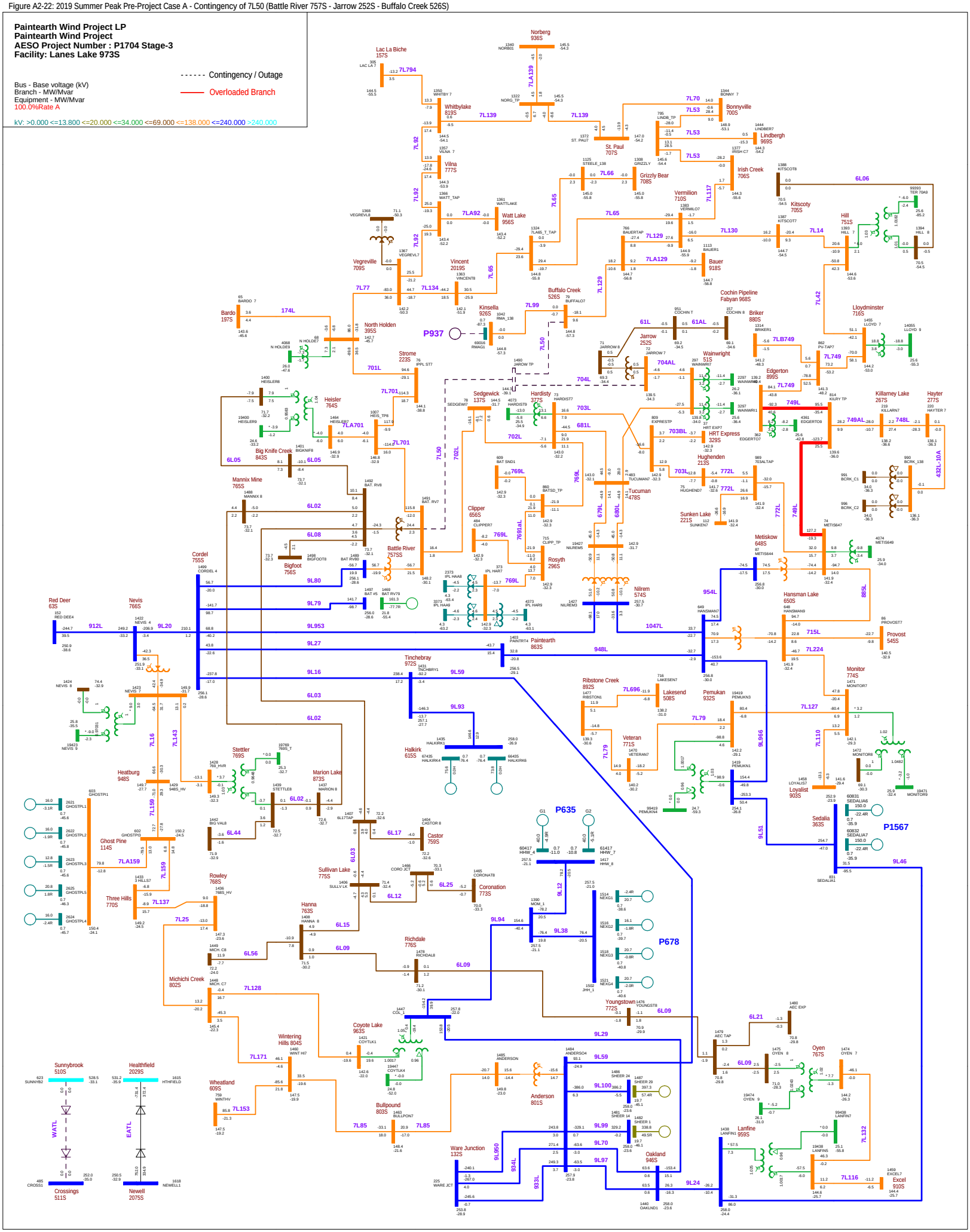

Figure A2-23: 2019 Summer Peak Pre-Project Case A - Contingency of 766S901T (Nevis 766S Transformer 901T)

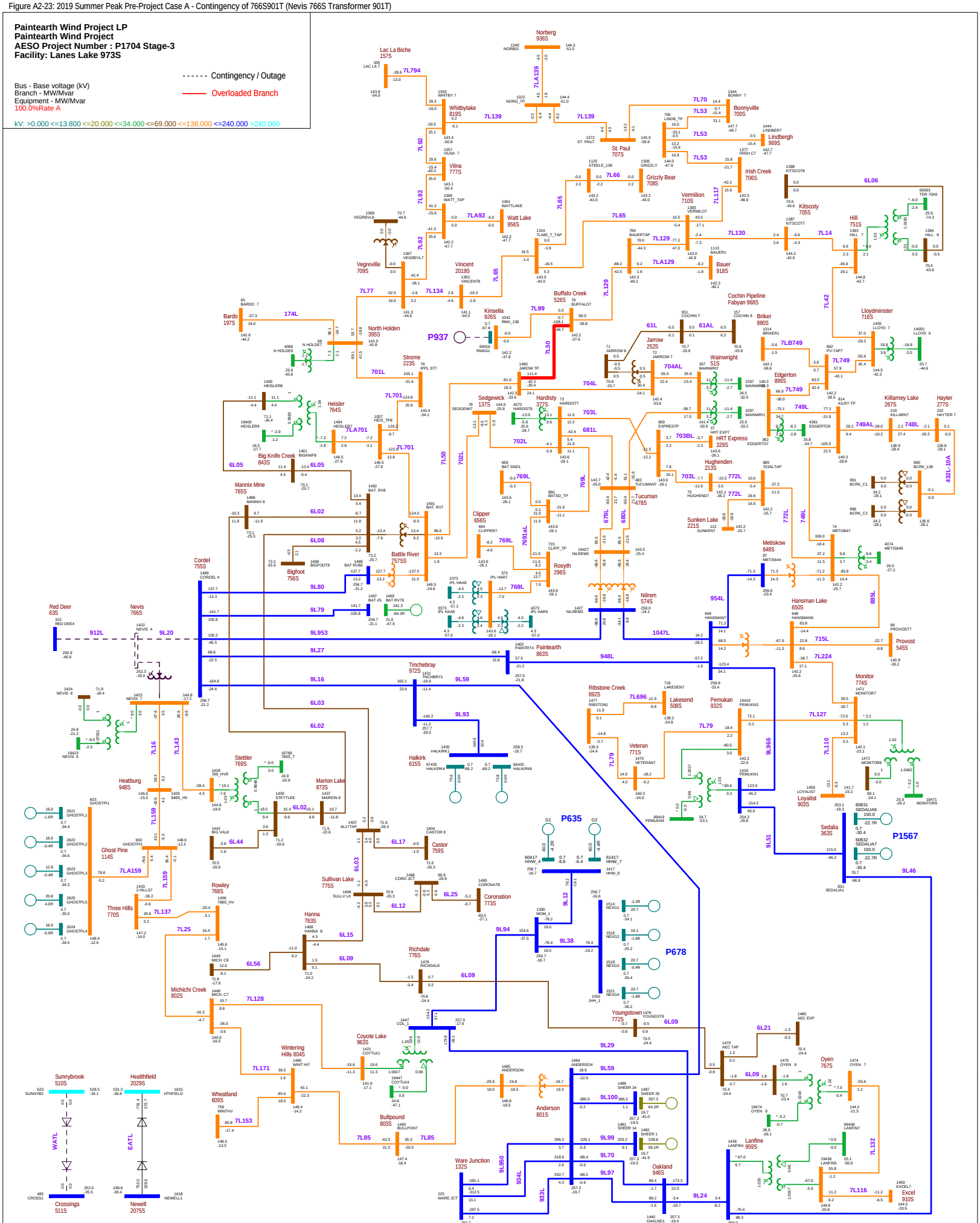

Figure A2-24: 2019 Summer Peak Pre-Project Case A - Contingency of 966L\9L966 (Hansman Lake 650S - Pemukan 932S)

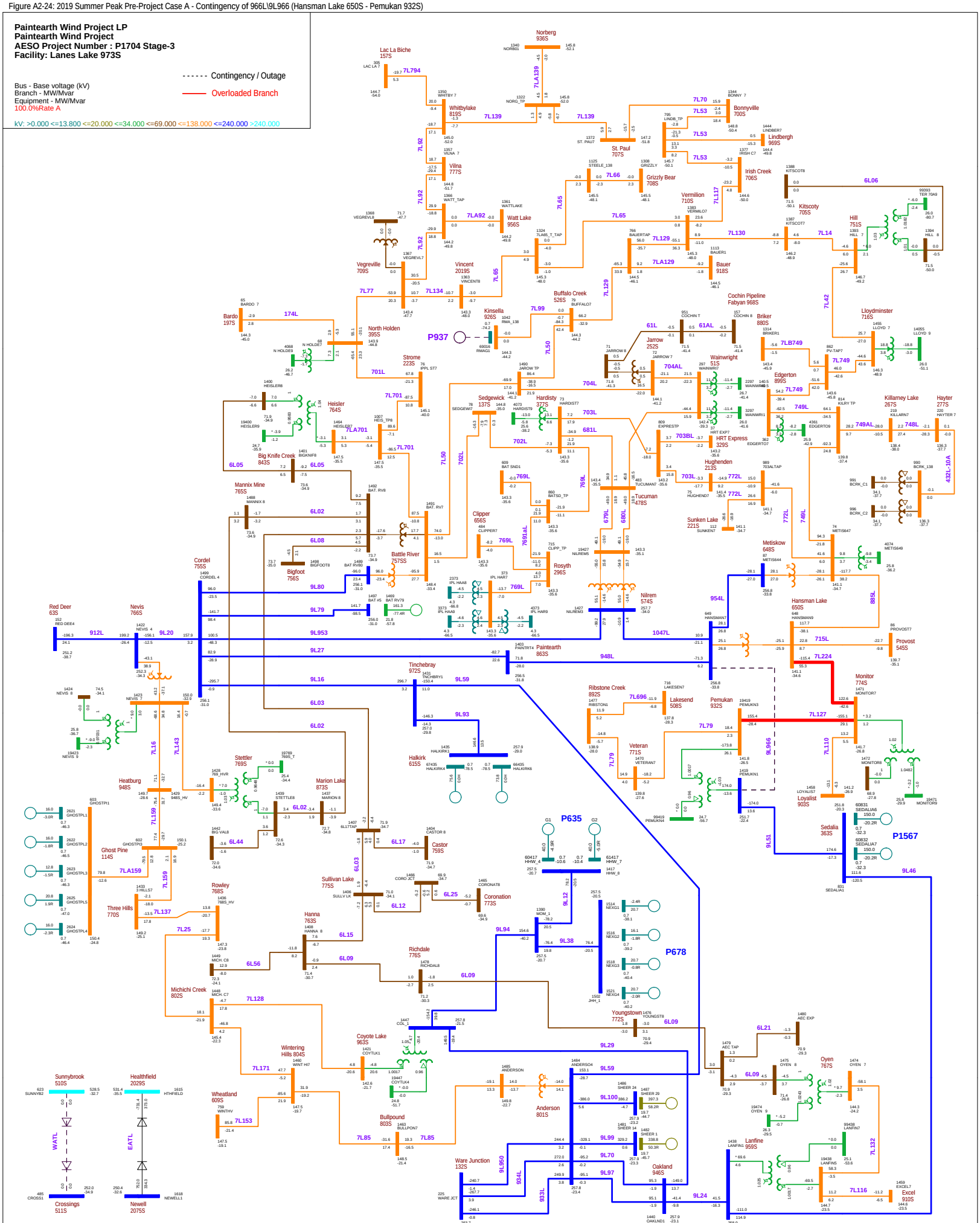
Paintearth Wind Project LP
Paintearth Wind Project
AESO Project Number : P1704 Stage-3
Facility: Lanes Lake 973S
Contingency / Outage
Overloaded Branch
Bus - Base voltage (kV)
Branch - MW/Mvar
Equipment - MW/Mvar
100.0%Rate A
kV: >0.000 <=13.800 <=20.000 <=34.000 <=69.000 <=138.000 <=240.000 >240.000
Norberg 936S
Lac La Biche 157S
Whitbylake 819S
Vilna 777S
Watt Lake 956S
Vegreville 709S
Vincent 2019S
St. Paul 707S
Bonnyville 700S
Lindbergh 969S
Irish Creek 706S
Grizzly Bear 708S
Vermilion 710S
Kitscoty 705S
Hill 751S
Bauer 918S
Cochin Pipeline Fabyan 968S
Buffalo Creek 526S
Kinsella 926S
North Holden 395S
Bardo 197S
Strome 223S
Jarrow 252S
Briker 880S
Wainwright 51S
Edgerton 899S
Lloydminster 716S
Killarney Lake 267S
Hayter 277S
Heisler 764S
Big Knife Creek 843S
Sedgewick 137S
Hardisty 377S
HRT Express 329S
Hughenden 213S
Sunken Lake 221S
Tucuman 478S
Mannix 765S
Clipper 656S
Battle River 757SS
Bigfoot 756S
Rosyth 296S
Nilrem 574S
Metiskow 648S
Hansman Lake 650S
Provost 545S
Cordel 755S
Red Deer 63S
Nevis 766S
Paintearth 863S
Tinchebray 972S
Ribstone Creek 892S
Lakesend 508S
Pemukan 932S
Monitor 774S
Veteran 771S
Loyalist 903S
Sedalia 363S
Heatburg 948S
Stettler 769S
Marion Lake 873S
Halkirk 615S
Castor 759S
Ghost Pine 114S
Three Hills 770S
Rowley 768S
Sullivan Lake 775S
Coronation 773S
Hanna 763S
Richdale 776S
Michichi Creek 802S
Youngstown 772S
Oyen 767S
Anderson 801S
Bullpound 803S
Wheatland 609S
Wintering Hills 804S
Coyote Lake 963S
Ware Junction 132S
Oakland 946S
Lanfine 959S
Excel 910S
Sunnybrook 510S
Healthfield 2029S
Crossings 511S
Newell 2075S
P937
P635
P678
P1567
912L
9L20
9L80
9L79
9L953
9L27
9L16
9L59
9L93
6L02
6L03
6L08
6L05
6L06
6L14
6L09
6L56
6L44
6L17
6L12
6L25
6L15
6L21
6L29
7L92
7L93
7L65
7L66
7L70
7L53
7L139
7L129
7L130
7L117
7L42
7L749
7L749A
7L748
7L14
7L77
7L134
7L65
7L99
7L50
7L701
7L701A
7L702
7L703
7L704
7L704A
7L703A
7L681
7L769
7L691A
7L680
7L679
7L772
7L772A
7L749
7L749A
7L224
7L127
7L110
7L79
7L696
7L143
7L16
7L159
7L159A
7L137
7L25
7L128
7L171
7L153
7L85
7L116
7L132
9L38
9L94
9L12
9L51
9L966
9L100
9L99
9L70
9L97
9L24
9L950
934L
933L
885L
1047L
954L
948L
715L
1L07
1L08
1L09
1L10
1L11
1L12
1L13
1L14
1L15
1L16
1L17
1L18
1L19
1L20
1L21
1L22
1L23
1L24
1L25
1L26
1L27
1L28
1L29
1L30
1L31
1L32
1L33
1L34
1L35
1L36
1L37
1L38
1L39
1L40
1L41
1L42
1L43
1L44
1L45
1L46
1L47
1L48
1L49
1L50
1L51
1L52
1L53
1L54
1L55
1L56
1L57
1L58
1L59
1L60
1L61
1L62
1L63
1L64
1L65
1L66
1L67
1L68
1L69
1L70
1L71
1L72
1L73
1L74
1L75
1L76
1L77
1L78
1L79
1L80
1L81
1L82
1L83
1L84
1L85
1L86
1L87
1L88
1L89
1L90
1L91
1L92
1L93
1L94
1L95
1L96
1L97
1L98
1L99
1L100
1L101
1L102
1L103
1L104
1L105
1L106
1L107
1L108
1L109
1L110
1L111
1L112
1L113
1L114
1L115
1L116
1L117
1L118
1L119
1L120
1L121
1L122
1L123
1L124
1L125
1L126
1L127
1L128
1L129
1L130
1L131
1L132
1L133
1L134
1L135
1L136
1L137
1L138
1L139
1L140
1L141
1L142
1L143
1L144
1L145
1L146
1L147
1L148
1L149
1L150
1L151
1L152
1L153
1L154
1L155
1L156
1L157
1L158
1L159
1L160
1L161
1L162
1L163
1L164
1L165
1L166
1L167
1L168
1L169
1L170
1L171
1L172
1L173
1L174
1L175
1L176
1L177
1L178
1L179
1L180
1L181
1L182
1L183
1L184
1L185
1L186
1L187
1L188
1L189
1L190
1L191
1L192
1L193
1L194
1L195
1L196
1L197
1L198
1L199
1L200
1L201
1L202
1L203
1L204
1L205
1L206
1L207
1L208
1L209
1L210
1L211
1L212
1L213
1L214
1L215
1L216
1L217
1L218
1L219
1L220
1L221
1L222
1L223
1L224
1L225
1L226
1L227
1L228
1L229
1L230
1L231
1L232
1L233
1L234
1L235
1L236
1L237
1L238
1L239
1L240
1L241
1L242
1L243
1L244
1L245
1L246
1L247
1L248
1L249
1L250
1L251
1L252
1L253
1L254
1L255
1L256
1L257
1L258
1L259
1L260
1L261
1L262
1L263
1L264
1L265
1L266
1L267
1L268
1L269
1L270
1L271
1L272
1L273
1L274
1L275
1L276
1L277
1L278
1L279
1L280
1L281
1L282
1L283
1L284
1L285
1L286
1L287
1L288
1L289
1L290
1L291
1L292
1L293
1L294
1L295
1L296
1L297
1L298
1L299
1L300
1L301
1L302
1L303
1L304
1L305
1L306
1L307
1L308
1L309
1L310
1L311
1L312
1L313
1L314
1L315
1L316
1L317
1L318
1L319
1L320
1L321
1L322
1L323
1L324
1L325
1L326
1L327
1L328
1L329
1L330
1L331
1L332
1L333
1L334
1L335
1L336
1L337
1L338
1L339
1L340
1L341
1L342
1L343
1L344
1L345
1L346
1L347
1L348
1L349
1L350
1L351
1L352
1L353
1L354
1L355
1L356
1L357
1L358
1L359
1L360
1L361
1L362
1L363
1L364
1L365
1L366
1L367
1L368
1L369
1L370
1L371
1L372
1L373
1L374
1L375
1L376
1L377
1L378
1L379
1L380
1L381
1L382
1L383
1L384
1L385
1L386
1L387
1L388
1L389
1L390
1L391
1L392
1L393
1L394
1L395
1L396
1L397
1L398
1L399
1L400
1L401
1L402
1L403
1L404
1L405
1L406
1L407
1L408
1L409
1L410
1L411
1L412
1L413
1L414
1L415
1L416
1L417
1L418
1L419
1L420
1L421
1L422
1L423
1L424
1L425
1L426
1L427
1L428
1L429
1L430
1L431
1L432
1L433
1L434
1L435
1L436
1L437
1L438
1L439
1L440
1L441
1L442
1L443
1L444
1L445
1L446
1L447
1L448
1L449
1L450
1L451
1L452
1L453
1L454
1L455
1L456
1L457
1L458
1L459
1L460
1L461
1L462
1L463
1L464
1L465
1L466
1L467
1L468
1L469
1L470
1L471
1L472
1L473
1L474
1L475
1L476
1L477
1L478
1L479
1L480
1L481
1L482
1L483
1L484
1L485
1L486
1L487
1L488
1L489
1L490
1L491
1L492
1L493
1L494
1L495
1L496
1L497
1L498
1L499
1L500
1L501
1L502
1L503
1L504
1L505
1L506
1L507
1L508
1L509
1L510
1L511
1L512
1L513
1L514
1L515
1L516
1L517
1L518
1L519
1L520
1L521
1L522
1L523
1L524
1L525
1L526
1L527
1L528
1L529
1L530
1L531
1L532
1L533
1L534
1L535
1L536
1L537
1L538
1L539
1L540
1L541
1L542
1L543
1L544
1L545
1L546
1L547
1L548
1L549
1L550
1L551
1L552
1L553
1L554
1L555
1L556
1L557
1L558
1L559
1L560
1L561
1L562
1L563
1L564
1L565
1L566
1L567
1L568
1L569
1L570
1L571
1L572
1L573
1L574
1L575
1L576
1L577
1L578
1L579
1L580
1L581
1L582
1L583
1L584
1L585
1L586
1L587
1L588
1L589
1L590
1L591
1L592
1L593
1L594
1L595
1L596
1L597
1L598
1L599
1L600
1L601
1L602
1L603
1L604
1L605
1L606
1L607
1L608
1L609
1L610
1L611
1L612
1L613
1L614
1L615
1L616
1L617
1L618
1L619
1L620
1L621
1L622
1L623
1L624
1L625
1L626
1L627
1L628
1L629
1L630
1L631
1L632
1L633
1L634
1L635
1L636
1L637
1L638
1L639
1L640
1L641
1L642
1L643
1L644
1L645
1L646
1L647
1L648
1L649
1L650
1L651
1L652
1L653
1L654
1L655
1L656
1L657
1L658
1L659
1L660
1L661
1L662
1L663
1L664
1L665
1L666
1L667
1L668
1L669
1L670
1L671
1L672
1L673
1L674
1L675
1L676
1L677
1L678
1L679
1L680
1L681
1L682
1L683
1L684
1L685
1L686
1L687
1L688
1L689
1L690
1L691
1L692
1L693
1L694
1L695
1L696
1L697
1L698
1L699
1L700
1L701
1L702
1L703
1L704
1L705
1L706
1L707
1L708
1L709
1L710
1L711
1L712
1L713
1L714
1L715
1L716
1L717
1L718
1L719
1L720
1L721
1L722
1L723
1L724
1L725
1L726
1L727
1L728
1L729
1L730
1L731
1L732
1L733
1L734
1L735
1L736
1L737
1L738
1L739
1L740
1L741
1L742
1L743
1L744
1L745
1L746
1L747
1L748
1L749
1L750
1L751
1L752
1L753
1L754
1L755
1L756
1L757
1L758
1L759
1L760
1L761
1L762
1L763
1L764
1L765
1L766
1L767
1L768
1L769
1L770
1L771
1L772
1L773
1L774
1L775
1L776
1L777
1L778
1L779
1L780
1L781
1L782
1L783
1L784
1L785
1L786
1L787
1L788
1L789
1L790
1L791
1L792
1L793
1L794
1L795
1L796
1L797
1L798
1L799
1L800
1L801
1L802
1L803
1L804
1L805
1L806
1L807
1L808
1L809
1L810
1L811
1L812
1L813
1L814
1L815
1L816
1L817
1L818
1L819
1L820
1L821
1L822
1L823
1L824
1L825
1L826
1L827
1L828
1L829
1L830
1L831
1L832
1L833
1L834
1L835
1L836
1L837
1L838
1L839
1L840
1L841
1L842
1L843
1L844
1L845
1L846
1L847
1L848
1L849
1L850
1L851
1L852
1L853
1L854
1L855
1L856
1L857
1L858
1L859
1L860
1L861
1L862
1L863
1L864
1L865
1L866
1L867
1L868
1L869
1L870
1L871
1L872
1L873
1L874
1L875
1L876
1L877
1L878
1L879
1L880
1L881
1L882
1L883
1L884
1L885
1L886
1L887
1L888
1L889
1L890
1L891
1L892
1L893
1L894
1L895
1L896
1L897
1L898
1L899
1L900
1L901
1L902
1L903
1L904
1L905
1L906
1L907
1L908
1L909
1L910
1L911
1L912
1L913
1L914
1L915
1L916
1L917
1L918
1L919
1L920
1L921
1L922
1L923
1L924
1L925
1L926
1L927
1L928
1L929
1L930
1L931
1L932
1L933
1L934
1L935
1L936
1L937
1L938
1L939
1L940
1L941
1L942
1L943
1L944
1L945
1L946
1L947
1L948
1L949
1L950
1L951
1L952
1L953
1L954
1L955
1L956
1L957
1L958
1L959
1L960
1L961
1L962
1L963
1L964
1L965
1L966
1L967
1L968
1L969
1L970
1L971
1L972
1L973
1L974
1L975
1L976
1L977
1L978
1L979
1L980
1L981
1L982
1L983
1L984
1L985
1L986
1L987
1L988
1L989
1L990
1L991
1L992
1L993
1L994
1L995
1L996
1L997
1L998
1L999
1L1000
1L1001
1L1002
1L1003
1L1004
1L1005
1L1006
1L1007
1L1008
1L1009
1L1010
1L1011
1L1012
1L1013
1L1014
1L1015
1L1016
1L1017
1L1018
1L1019
1L1020
1L1021
1L1022
1L1023
1L1024
1L1025
1L1026
1L1027
1L1028
1L1029
1L1030
1L1031
1L1032
1L1033
1L1034
1L1035
1L1036
1L1037
1L1038
1L1039
1L1040
1L1041
1L1042
1L1043
1L1044
1L1045
1L1046
1L1047
1L1048
1L1049
1L1050
1L1051
1L1052
1L1053
1L1054
1L1055
1L1056
1L1057
1L1058
1L1059
1L1060
1L1061
1L1062
1L1063
1L1064
1L1065
1L1066
1L1067
1L1068
1L1069
1L1070
1L1071
1L1072
1L1073
1L1074
1L1075
1L1076
1L1077
1L1078
1L1079
1L1080
1L1081
1L1082
1L1083
1L1084
1L1085
1L1086
1L1087
1L1088
1L1089
1L1090
1L1091
1L1092
1L1093
1L1094
1L1095
1L1096
1L1097
1L1098
1L1099
1L1100
1L1101
1L1102
1L1103
1L1104
1L1105
1L1106
1L1107
1L1108
1L1109
1L1110
1L1111
1L1112
1L1113
1L1114
1L1115
1L1116
1L1117
1L1118
1L1119
1L1120
1L1121
1L1122
1L1123
1L1124
1L1125
1L1126
1L1127
1L1128
1L1129
1L1130
1L1131
1L1132
1L1133
1L1134
1L1135
1L1136
1L1137
1L1138
1L1139
1L1140
1L1141
1L1142
1L1143
1L1144
1L1145
1L1146
1L1147
1L1148
1L1149
1L1150
1L1151
1L1152
1L1153
1L1154
1L1155
1L1156
1L1157
1L1158
1L1159
1L1160
1L1161
1L1162
1L1163
1L1164
1L1165
1L1166
1L1167
1L1168
1L1169
1L1170
1L1171
1L1172
1L1173
1L1174
1L1175
1L1176
1L1177
1L1178
1L1179
1L1180
1L1181
1L1182
1L1183
1L1184
1L1185
1L1186
1L1187
1L1188
1L1189
1L1190
1L1191
1L1192
1L1193
1L1194
1L1195
1L1196
1L1197
1L1198
1L1199
1L1200
1L1201
1L1202
1L1203
1L1204
1L1205
1L1206
1L1207
1L1208
1L1209
1L1210
1L1211
1L1212
1L1213
1L1214
1L1215
1L1216
1L1217
1L1218
1L1219
1L1220
1L1221
1L1222
1L1223
1L1224
1L1225
1L1226
1L1227
1L1228
1L1229
1L1230
1L1231
1L1232
1L1233
1L1234
1L1235
1L1236
1L1237
1L1238
1L1239
1L1240
1L1241
1L1242
1L1243
1L1244
1L1245
1L1246
1L1247
1L1248
1L1249
1L1250
1L1251
1L1252
1L1253
1L1254
1L1255
1L1256
1L1257
1L1258
1L1259
1L1260
1L1261
1L1262
1L1263
1L1264
1L1265
1L1266
1L1267
1L1268
1L1269
1L1270
1L1271
1L1272
1L1273
1L1274
1L1275
1L1276
1L1277
1L1278
1L1279
1L1280
1L1281
1L1282
1L1283
1L1284
1L1285
1L1286
1L1287
1L1288
1L1289
1L1290
1L1291
1L1292
1L1293
1L1294
1L1295
1L1296
1L1297
1L1298
1L1299
1L1300
1L1301
1L1302
1L1303
1L1304
1L1305
1L1306
1L1307
1L1308
1L1309
1L1310
1L1311
1L1312
1L1313
1L1314
1L1315
1L1316
1L1317
1L1318
1L1319
1L1320
1L1321
1L1322
1L1323
1L1324
1L1325
1L1326
1L1327
1L1328
1L1329
1L1330
1L1331
1L1332
1L1333
1L1334
1L1335
1L1336
1L1337
1L1338
1L1339
1L1340
1L1341
1L1342
1L1343
1L1344
1L1345
1L1346
1L1347
1L1348
1L1349
1L1350
1L1351
1L1352
1L1353
1L1354
1L1355
1L1356
1L1357
1L1358
1L1359
1L1360
1L1361
1L1362
1L1363
1L1364
1L1365
1L1366
1L1367
1L1368
1L1369
1L1370
1L1371
1L1372
1L1373
1L1374
1L1375
1L1376
1L1377
1L1378
1L1379
1L1380
1L1381
1L1382
1L1383
1L1384
1L1385
1L1386
1L1387
1L1388
1L1389
1L1390
1L1391
1L1392
1L1393
1L1394
1L1395
1L1396
1L1397
1L1398
1L1399
1L1400
1L1401
1L1402
1L1403
1L1404
1L1405
1L1406
1L1407
1L1408
1L1409
1L1410
1L1411
1L1412
1L1413
1L1414
1L1415
1L1416
1L1417
1L1418
1L1419
1L1420
1L1421
1L1422
1L1423
1L1424
1L1425
1L1426
1L1427
1L1428
1L1429
1L1430
1L1431
1L1432
1L1433
1L1434
1L1435
1L1436
1L1437
1L1438
1L1439
1L1440
1L1441
1L1442
1L1443
1L1444
1L1445
1L1446
1L1447
1L1448
1L1449
1L1450
1L1451
1L1452
1L1453
1L1454
1L1455
1L1456
1L1457
1L1458
1L1459
1L1460
1L1461
1L1462
1L1463
1L1464
1L1465
1L1466
1L1467
1L1468
1L1469
1L1470
1L1471
1L1472
1L1473
1L1474
1L1475
1L1476
1L1477
1L1478
1L1479
1L1480
1L1481
1L1482
1L1483
1L1484
1L1485
1L1486
1L1487
1L1488
1L1489
1L1490
1L1491
1L1492
1L1493
1L1494
1L1495
1L1496
1L1497
1L1498
1L1499
1L1500
1L1501
1L1502
1L1503
1L1504
1L1505
1L1506
1L1507
1L1508
1L1509
1L1510
1L1511
1L1512
1L1513
1L1514
1L1515
1L1516
1L1517
1L1518
1L1519
1L1520
1L1521
1L1522
1L1523
1L1524
1L1525
1L1526
1L1527
1L1528
1L1529
1L1530
1L1531
1L1532
1L1533
1L1534
1L1535
1L1536
1L1537
1L1538
1L1539
1L1540
1L1541
1L1542
1L1543
1L1544
1L1545
1L1546
1L1547
1L1548
1L1549
1L1550
1L1551
1L1552
1L1553
1L1554
1L1555
1L1556
1L1557
1L1558
1L1559
1L1560
1L1561
1L1562
1L1563
1L1564
1L1565
1L1566
1L1567
1L1568
1L1569
1L1570
1L1571
1L1572
1L1573
1L1574
1L1575
1L1576
1L1577
1L1578
1L1579
1L1580
1L1581
1L1582
1L1583
1L1584
1L1585
1L1586
1L1587
1L1588
1L1589
1L1590
1L1591
1L1592
1L1593
1L1594
1L1595
1L1596
1L1597
1L1598
1L1599
1L1600
1L1601
1L1602
1L1603
1L1604
1L1605
1L1606
1L1607
1L1608
1L1609
1L1610
1L1611
1L1612
1L1613
1L1614
1L1615
1L1616
1L1617
1L1618
1L1619
1L1620
1L1621
1L1622
1L1623
1L1624
1L1625
1L1626
1L1627
1L1628
1L1629
1L1630
1L1631
1L1632
1L1633
1L1634
1L1635
1L1636
1L1637
1L1638
1L1639
1L1640
1L1641
1L1642
1L1643
1L1644
1L1645
1L1646
1L1647
1L1648
1L1649
1L1650
1L1651
1L1652
1L1653
1L1654
1L1655
1L1656
1L1657
1L1658
1L1659
1L1660
1L1661
1L1662
1L1663
1L1664
1L1665
1L1666
1L1667
1L1668
1L1669
1L1670
1L1671
1L1672
1L1673
1L1674
1L1675
1L1676
1L1677
1L1678
1L1679
1L1680
1L1681
1L1682
1L1683
1L1684
1L1685
1L1686
1L1687
1L1688
1L1689
1L1690
1L1691
1L1692
1L1693
1L1694
1L1695
1L1696
1L1697
1L1698
1L1699
1L1700
1L1701
1L1702
1L1703
1L1704
1L1705
1L1706
1L1707
1L1708
1L1709
1L1710
1L1711
1L1712
1L1713
1L1714
1L1715
1L1716
1L1717
1L1718
1L1719
1L1720
1L1721
1L1722
1L1723
1L1724
1L1725
1L1726
1L1727
1L1728
1L1729
1L1730
1L1731
1L1732
1L1733
1L1734
1L1735
1L1736
1L1737
1L1738
1L1739
1L1740
1L1741
1L1742
1L1743
1L1744
1L1745
1L1746
1L1747
1L1748
1L1749
1L1750
1L1751
1L1752
1L1753
1L1754
1L1755
1L1756
1L1757
1L1758
1L1759
1L1760
1L1761
1L1762
1L1763
1L1764
1L1765
1L1766
1L1767
1L1768
1L1769
1L1770
1L1771
1L1772
1L1773
1L1774
1L1775
1L1776
1L1777
1L1778
1L1779
1L1780
1L1781
1L1782
1L1783
1L1784
1L1785
1L1786
1L1787
1L1788
1L1789
1L1790
1L1791
1L1792
1L1793
1L1794
1L1795
1L1796
1L1797
1L1798
1L1799
1L1800
1L1801
1L1802
1L1803
1L1804
1L1805
1L1806
1L1807
1L1808
1L1809
1L1810
1L1811
1L1812
1L1813
1L1814
1L1815
1L1816
1L1817
1L1818
1L1819
1L1820
1L1821
1L1822
1L1823
1L1824
1L1825
1L1826
1L1827
1L1828
1L1829
1L1830
1L1831
1L1832
1L1833
1L1834
1L1835
1L1836
1L1837
1L1838
1L1839
1L1840
1L1841
1L1842
1L1843
1L1844
1L1845
1L1846
1L1847
1L1848
1L1849
1L1850
1L1851
1L1852
1L1853
1L1854
1L1855
1L1856
1L1857
1L1858
1L1859
1L1860
1L1861
1L1862
1L1863
1L1864
1L1865
1L1866
1L1867
1L1868
1L1869
1L1870
1L1871
1L1872
1L1873
1L1874
1L1875
1L1876
1L1877
1L1878
1L1879
1L1880
1L1881
1L1882
1L1883
1L1884
1L1885
1L1886
1L1887
1L1888
1L1889
1L1890
1L1891
1L1892
1L1893
1L1894
1L1895
1L1896
1L1897
1L1898
1L1899
1L1900
1L1901
1L1902
1L1903
1L1904
1L1905
1L1906
1L1907
1L1908
1L1909
1L1910
1L1911
1L1912
1L1913
1L1914
1L1915
1L1916
1L1917
1L1918
1L1919
1L1920
1L1921
1L1922
1L1923
1L1924
1L1925
1L1926
1L1927
1L1928
1L1929
1L1930
1L1931
1L1932
1L1933
1L1934
1L1935
1L1936
1L1937
1L1938
1L1939
1L1940
1L1941
1L1942
1L1943
1L1944
1L1945
1L1946
1L1947
1L1948
1L1949
1L1950
1L1951
1L1952
1L1953
1L1954
1L1955
1L1956
1L1957
1L1958
1L1959
1L1960
1L1961
1L1962
1L1963
1L1964
1L1965
1L1966
1L1967
1L1968
1L1969
1L1970
1L1971
1L1972
1L1973
1L1974
1L1975
1L1976
1L1977
1L1978
1L1979
1L1980
1L1981
1L1982
1L1983
1L1984
1L1985
1L1986
1L1987
1L1988
1L1989
1L1990
1L1991
1L1992
1L1993
1L1994
1L1995
1L1996
1L1997
1L1998
1L1999
1L2000
1L2001
1L2002
1L2003
1L2004
1L2005
1L2006
1L2007
1L2008
1L2009
1L2010
1L2011
1L2012
1L2013
1L2014
1L2015
1L2016
1L2017
1L2018
1L2019
1L2020
1L2021
1L2022
1L2023
1L2024
1L2025
1L2026
1L2027
1L2028
1L2029
1L2030
1L2031
1L2032
1L2033
1L2034
1L2035
1L2036
1L2037
1L2038
1L2039
1L2040
1L2041
1L2042
1L2043
1L2044
1L2045
1L2046
1L2047
1L2048
1L2049
1L2050
1L2051
1L2052
1L2053
1L2054
1L2055
1L2056
1L2057
1L2058
1L2059
1L2060
1L2061
1L2062
1L2063
1L2064
1L2065
1L2066
1L2067
1L2068
1L2069
1L2070
1L2071
1L2072
1L2073
1L2074
1L2075
1L2076
1L2077
1L2078
1L2079
1L2080
1L2081
1L2082
1L2083
1L2084
1L2085
1L2086
1L2087
1L2088
1L2089
1L2090
1L2091
1L2092
1L2093
1L2094
1L2095
1L2096
1L2097
1L2098
1L2099
1L2100
1L2101
1L2102
1L2103
1L2104
1L2105
1L2106
1L2107
1L2108
1L2109
1L2110
1L2111
1L2112
1L2113
1L2114
1L2115
1L2116
1L2117
1L2118
1L2119
1L2120
1L2121
1L2122
1L2123
1L2124
1L2125
1L2126
1L2127
1L2128
1L2129
1L2130
1L2131
1L2132
1L2133
1L2134
1L2135
1L2136
1L2137
1L2138
1L2139
1L2140
1L2141
1L2142
1L2143
1L2144
1L2145
1L2146
1L2147
1L2148
1L2149
1L2150
1L2151
1L2152
1L2153
1L2154
1L2155
1L2156
1L2157
1L2158
1L2159
1L2160
1L2161
1L2162
1L2163
1L2164
1L2165
1L2166
1L2167
1L2168
1L2169
1L2170
1L2171
1L2172
1L2173
1L2174
1L2175
1L2176
1L2177
1L2178
1L2179
1L2180
1L2181
1L2182
1L2183
1L2184
1L2185
1L2186
1L2187
1L2188
1L2189
1L2190
1L2191
1L2192
1L2193
1L2194
1L2195
1L2196
1L2197
1L2198
1L2199
1L2200
1L2201
1L2202
1L2203
1L2204
1L2205
1L2206
1L2207
1L2208
1L2209
1L2210
1L2211
1L2212
1L2213
1L2214
1L2215
1L2216
1L2217
1L2218
1L2219
1L2220
1L2221
1L2222
1L2223
1L2224
1L2225
1L2226
1L2227
1L2228
1L2229
1L2230
1L2231
1L2232
1L2233
1L2234
1L2235
1L2236
1L2237
1L2238
1L2239
1L2240
1L2241
1L2242
1L2243
1L2244
1L2245
1L2246
1L2247
1L2248
1L2249
1L2250
1L2251
1L2252
1L2253
1L2254
1L2255
1L2256
1L2257
1L2258
1L2259
1L2260
1L2261
1L2262
1L2263
1L2264
1L2265
1L2266
1L2267
1L2268
1L2269
1L2270
1L2271
1L2272
1L2273
1L2274
1L2275
1L2276
1L2277
1L2278
1L2279
1L2280
1L2281
1L2282
1L2283
1L2284
1L2285
1L2286
1L2287
1L2288
1L2289
1L2290
1L2291
1L2292
1L2293
1L2294
1L2295
1L2296
1L2297
1L2298
1L2299
1L2300
1L2301
1L2302
1L2303
1L2304
1L2305
1L2306
1L2307
1L2308
1L2309
1L2310
1L2311
1L2312
1L2313
1L2314
1L2315
1L2316
1L2317
1L2318
1L2319
1L2320
1L2321
1L2322
1L2323
1L2324
1L2325
1L2326
1L2327
1L2328
1L2329
1L2330
1L2331
1L2332
1L2333
1L2334
1L2335
1L2336
1L2337
1L2338
1L2339
1L2340
1L2341
1L2342
1L2343
1L2344
1L2345
1L2346
1L2347
1L2348
1L2349
1L2350
1L2351
1L2352
1L2353
1L2354
1L2355
1L2356
1L2357
1L2358
1L2359
1L2360
1L2361
1L2362
1L2363
1L2364
1L2365
1L2366
1L2367
1L2368
1L2369
1L2370
1L2371
1L2372
1L2373
1L2374
1L2375
1L2376
1L2377
1L2378
1L2379
1L2380
1L2381
1L2382
1L2383
1L2384
1L2385
1L2386
1L2387
1L2388
1L2389
1L2390
1L2391
1L2392
1L2393
1L2394
1L2395
1L2396
1L2397
1L2398
1L2399
1L2400
1L2401
1L2402
1L2403
1L2404
1L2405
1L2406
1L2407
1L2408
1L2409
1L2410
1L2411
1L2412
1L2413
1L2414
1L2415
1L2416
1L2417
1L2418
1L2419
1L2420
1L2421
1L2422
1L2423
1L2424
1L2425
1L2426
1L2427
1L2428
1L2429
1L2430
1L2431
1L2432
1L2433
1L2434
1L2435
1L2436
1L2437
1L2438
1L2439
1L2440
1L2441
1L2442
1L2443
1L2444
1L2445
1L2446
1L2447
1L2448
1L2449
1L2450
1L2451
1L2452
1L2453
1L2454
1L2455
1L2456
1L2457
1L2458
1L2459
1L2460
1L2461
1L2462
1L2463
1L2464
1L2465
1L2466
1L2467
1L2468
1L2469
1L2470
1L2471
1L2472
1L2473
1L2474
1L2475
1L2476
1L2477
1L2478
1L2479
1L2480
1L2481
1L2482
1L2483
1L2484
1L2485
1L2486
1L2487
1L2488
1L2489
1L2490
1L2491
1L2492
1L2493
1L2494
1L2495
1L2496
1L2497
1L2498
1L2499
1L2500
1L2501
1L2502
1L2503
1L2504
1L2505
1L2506
1L2507
1L2508
1L2509
1L2510
1L2511
1L2512
1L2513
1L2514
1L2515
1L2516
1L2517
1L2518
1L2519
1L2520
1L2521
1L2522
1L2523
1L2524
1L2525
1L2526
1L2527
1L2528
1L2529
1L2530
1L2531
1L2532
1L2533
1L2534
1L2535
1L2536
1L2537
1L2538
1L2539
1L2540
1L2541
1L2542
1L2543
1L2544
1L2545
1L2546
1L2547
1L2548
1L2549
1L2550
1L2551
1L2552
1L2553
1L2554
1L2555
1L2556
1L2557
1L2558
1L2559
1L2560
1L2561
1L2562
1L2563
1L2564
1L2565
1L2566
1L2567
1L2568
1L2569
1L2570
1L2571
1L2572
1L2573
1L2574
1L2575
1L2576
1L2577
1L2578
1L2579
1L2580
1L2581
1L2582
1L2583
1L2584
1L2585
1L2586
1L2587
1L2588
1L2589
1L2590
1L2591
1L2592
1L2593
1L2594
1L2595
1L2596
1L2597
1L2598
1L2599
1L2600
1L2601
1L2602
1L2603
1L2604
1L2605
1L2606
1L2607
1L2608
1L2609
1L2610
1L2611
1L2612
1L2613
1L2614
1L2615
1L2616
1L2617
1L2618
1L2619
1L2620
1L2621
1L2622
1L2623
1L2624
1L2625
1L2626
1L2627
1L2628
1L2629
1L2630
1L2631
1L2632
1L2633
1L2634
1L2635
1L2636
1L2637
1L2638
1L2639
1L2640
1L2641
1L2642
1L2643
1L2644
1L2645
1L2646
1L2647
1L2648
1L2649
1L2650
1L2651
1L2652
1L2653
1L2654
1L2655
1L2656
1L2657
1L2658
1L2659
1L2660
1L2661
1L2662
1L2663
1L2664
1L2665
1L2666
1L2667
1L2668
1L2669
1L2670
1L2671
1L2672
1L2673
1L2674
1L2675
1L2676
1L2677
1L2678
1L2679
1L2680
1L2681
1L2682
1L2683
1L2684
1L2685
1L2686
1L2687
1L2688
1L2689
1L2690
1L2691
1L2692
1L2693
1L2694
1L2695
1L2696
1L2697
1L2698
1L2699
1L2700
1L2701
1L2702
1L2703
1L2704
1L2705
1L2706
1L2707
1L2708
1L2709
1L2710
1L2711
1L2712
1L2713
1L2714
1L2715
1L2716
1L2717
1L2718
1L2719
1L2720
1L2721
1L2722
1L2723
1L2724
1L2725
1L2726
1L2727
1L2728
1L2729
1L2730
1L2731
1L2732
1L2733
1L2734
1L2735
1L2736
1L2737
1L2738
1L2739
1L2740
1L2741
1L2742
1L2743
1L2744
1L2745
1L2746
1L2747
1L2748
1L2749
1L2750
1L2751
1L2752
1L2753
1L2754
1L2755
1L2756
1L2757
1L2758
1L2759
1L2760
1L2761
1L2762
1L2763
1L2764
1L2765
1L2766
1L2767
1L2768
1L2769
1L2770
1L2771
1L2772
1L2773
1L2774
1L2775
1L2776
1L2777
1L2778
1L2779
1L2780
1L2781
1L2782
1L2783
1L2784
1L2785
1L2786
1L2787
1L2788
1L2789
1L2790
1L2791
1L2792
1L2793
1L2794
1L2795
1L2796
1L2797
1L2798
1L2799
1L2800
1L2801
1L2802
1L2803
1L2804
1L2805
1L2806
1L2807
1L2808
1L2809
1L2810
1L2811
1L2812
1L2813
1L2814
1L2815
1L2816
1L2817
1L2818
1L2819
1L2820
1L2821
1L2822
1L2823
1L2824
1L2825
1L2826
1L2827
1L2828
1L2829
1L2830
1L2831
1L2832
1L2833
1L2834
1L2835
1L2836
1L2837
1L2838
1L2839
1L2840
1L2841
1L2842
1L2843
1L2844
1L2845
1L2846
1L2847
1L2848
1L2849
1L2850
1L2851
1L2852
1L2853
1L2854
1L2855
1L2856
1L2857
1L2858
1L2859
1L2860
1L2861
1L2862
1L2863
1L2864
1L2865
1L2866
1L2867
1L2868
1L2869
1L2870
1L2871
1L2872
1L2873
1L2874
1L2875
1L2876
1L2877
1L2878
1L2879
1L2880
1L2881
1L2882
1L2883
1L2884
1L2885
1L2886
1L2887
1L2888
1L2889
1L2890
1L2891
1L2892
1L2893
1L2894
1L2895
1L2896
1L2897
1L2898
1L2899
1L2900
1L2901
1L2902
1L2903
1L2904
1L2905
1L2906
1L2907
1L2908
1L2909
1L2910
1L2911
1L2912
1L2913
1L2914
1L2915
1L2916
1L2917
1L2918
1L2919
1L2920
1L2921
1L2922
1L2923
1L2924
1L2925
1L2926
1L2927
1L2928
1L2929
1L2930
1L2931
1L2932
1L2933
1L2934
1L2935
1L2936
1L2937
1L2938
1L2939
1L2940
1L2941
1L2942
1L2943
1L2944
1L2945
1L2946
1L2947
1L2948
1L2949
1L2950
1L2951
1L2952
1L2953
1L2954
1L2955
1L2956
1L2957
1L2958
1L2959
1L2960
1L2961
1L2962
1L2963
1L2964
1L2965
1L2966
1L2967
1L2968
1L2969
1L2970
1L2971
1L2972
1L2973
1L2974
1L2975
1L2976
1L2977
1L2978
1L2979
1L2980
1L2981
1L2982
1L2983
1L2984
1L2985
1L2986
1L2987
1L2988
1L2989
1L2990
1L2991
1L2992
1L2993
1L2994
1L2995
1L2996
1L2997
1L2998
1L2999
1L3000
1L3001
1L3002
1L3003
1L3004
1L3005
1L3006
1L3007
1L3008
1L3009
1L3010
1L3011
1L3012
1L3013
1L3014
1L3015
1L3016
1L3017
1L3018
1L3019
1L3020
1L3021
1L3022
1L3023
1L3024
1L3025
1L3026
1L3027
1L3028
1L3029
1L3030
1L3031
1L3032
1L3033
1L3034
1L3035
1L3036
1L3037
1L3038
1L3039
1L3040
1L3041
1L3042
1L3043
1L3044
1L3045
1L3046
1L3047
1L3048
1L3049
1L3050
1L3051
1L3052
1L3053
1L3054
1L3055
1L3056
1L3057
1L3058
1L3059
1L3060
1L3061
1L3062
1L3063
1L3064
1L3065
1L3066
1L3067
1L3068
1L3069
1L3070
1L3071
1L3072
1L3073
1L3074
1L3075
1L3076
1L3077
1L3078
1L3079
1L3080
1L3081
1L3082
1L3083
1L3084
1L3085
1L3086
1L3087
1L3088
1L3089
1L3090
1L3091
1L3092
1L3093
1L3094
1L3095
1L3096
1L3097
1L3098
1L3099
1L3100
1L3101
1L3102
1L3103
1L3104
1L3105
1L3106
1L3107
1L3108
1L3109

Figure A2-25: 2019 Summer Peak Pre-Project Case A - Contingency of 9L16 (Tinchebray 972S - Cordel 755S)

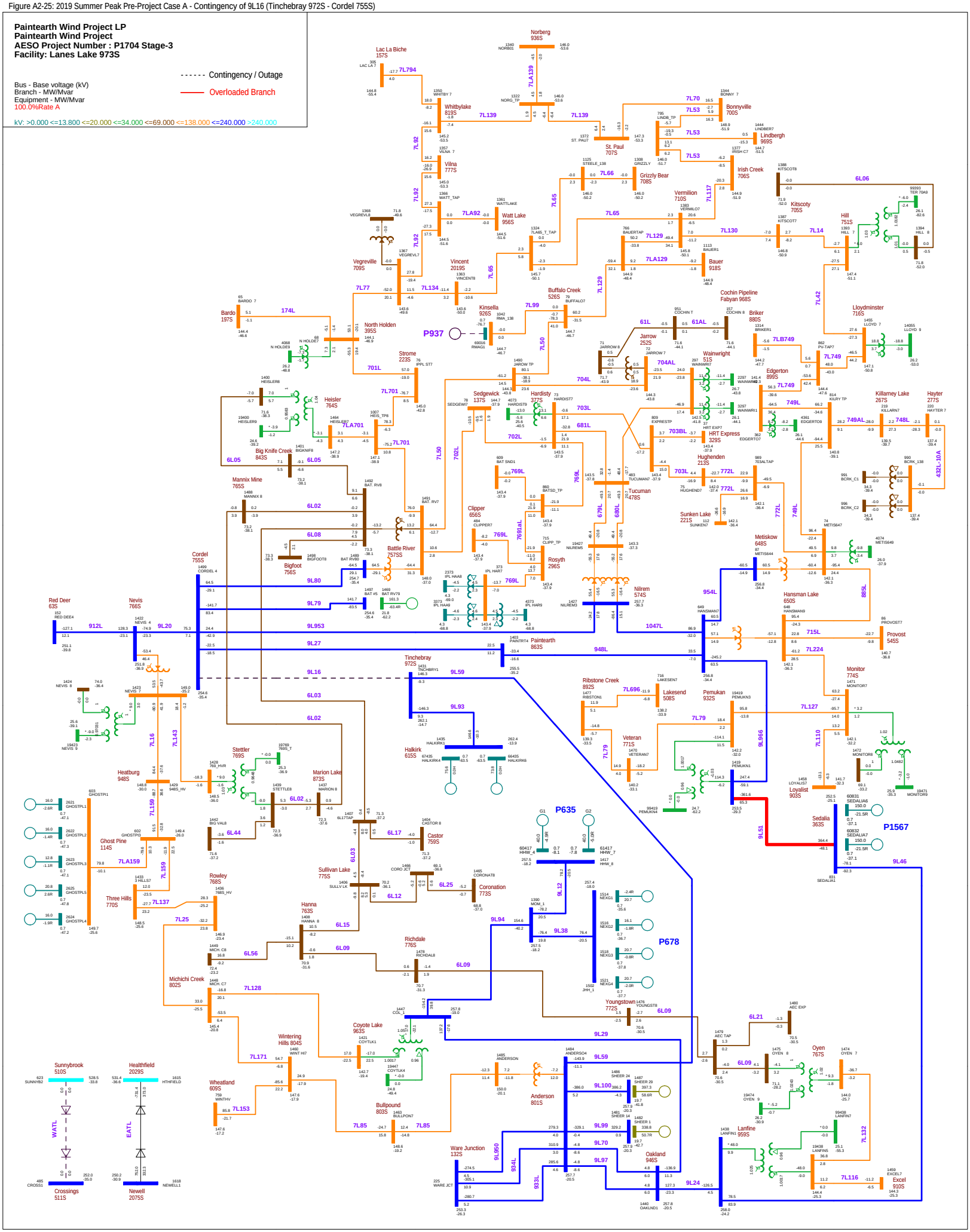

Figure A2-26: 2019 Summer Peak Pre-Project Case A - Contingency of 7L42 (Hill 751S - Lloydminster 716S)

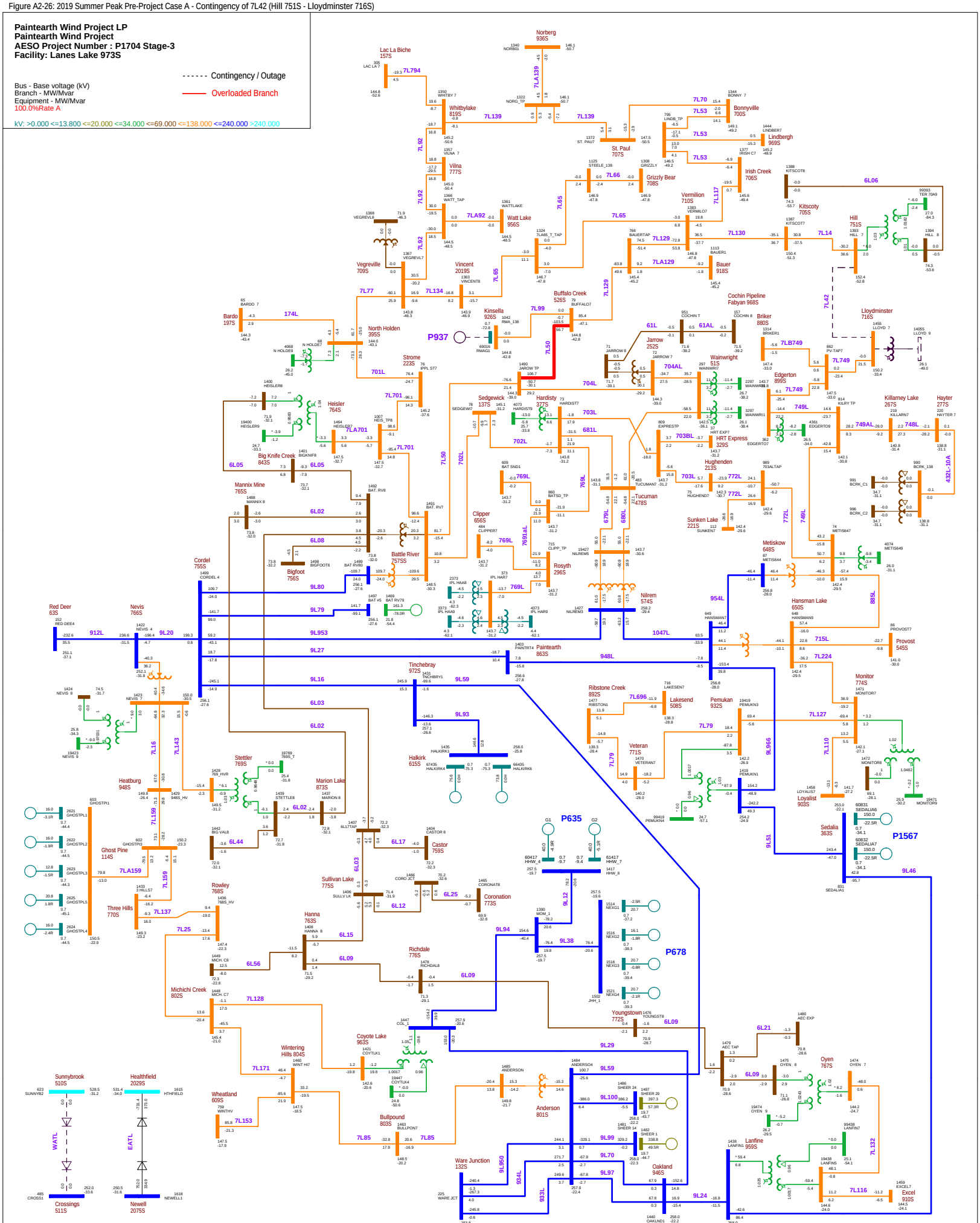

Figure A2-27: 2019 Summer Peak Pre-Project Case A - Contingency of 701L (North Holden 395S - Strome 223S)

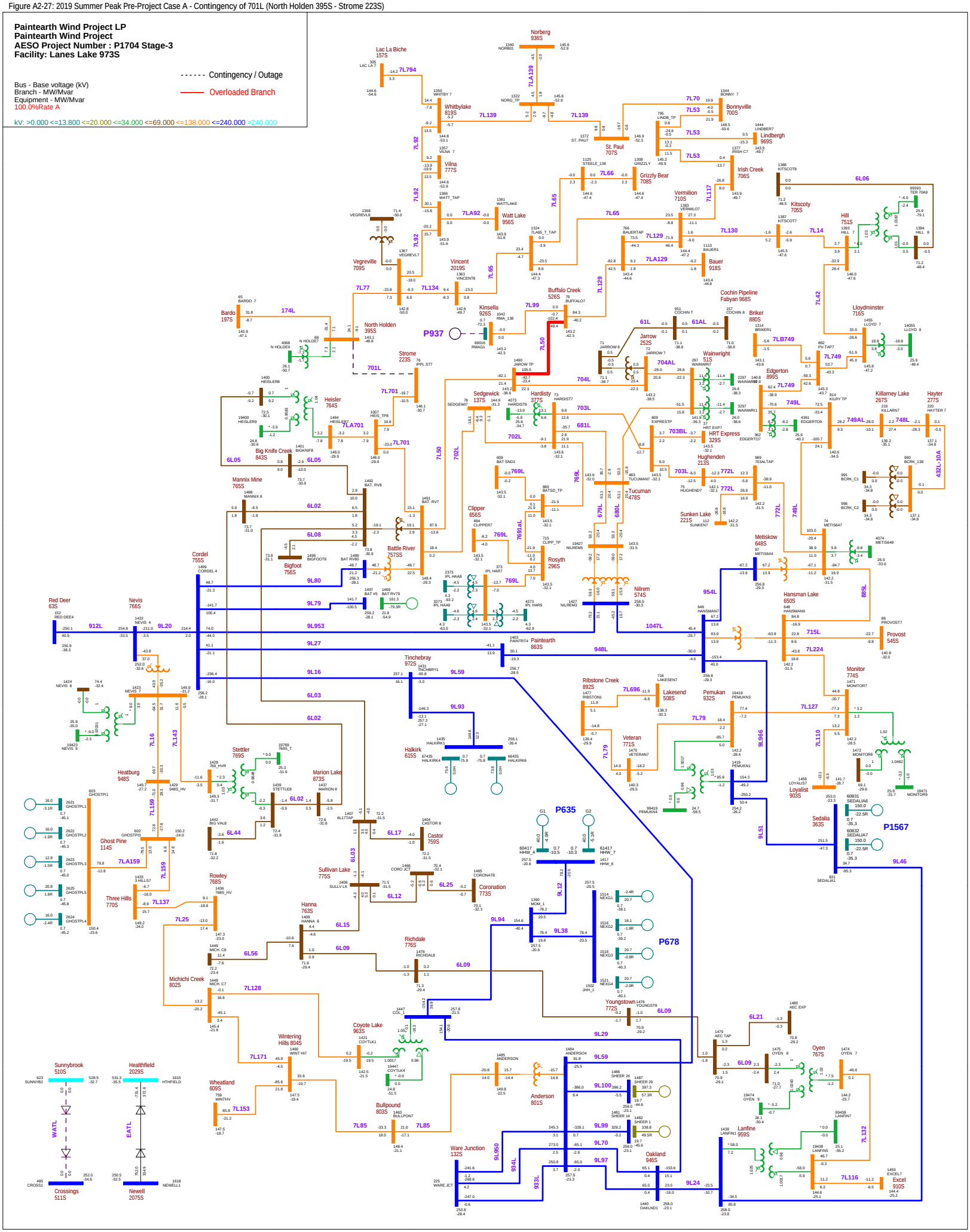
Paintearth Wind Project LP
Paintearth Wind Project
AESO Project Number : P1704 Stage-3
Facility: Lanes Lake 973S
Contingency / Outage
Overloaded Branch
Bus - Base voltage (kV)
Branch - MW/Mvar
Equipment - MW/Mvar
100.0%Rate A
kV: >0.000 <=13.800 <=20.000 <=34.000 <=69.000 <=138.000 <=240.000 >240.000
Norberg 936S
Lac La Biche 157S
Whitbylake 819S
Vilna 777S
Watt Lake 956S
Vegreville 709S
Vincent 2019S
Kinsella 926S
Buffalo Creek 526S
St. Paul 707S
Vermilion 710S
Grizzly Bear 708S
Bonnyville 700S
Lindbergh 969S
Irish Creek 706S
Kitscoty 705S
Hill 751S
Lloydminster 716S
Cochin Pipeline
Fabyan 968S
Briker 880S
Wainwright 51S
Edgerton 899S
Killarney Lake 267S
Hayter 277S
Bardo 197S
North Holden 395S
P937
Strome 223S
Heisler 764S
Big Knife Creek 843S
Mannix Mine 765S
Cordel 755S
Bigfoot 756S
Battle River 757SS
Sedgewick 137S
Hardisty 377S
Jarrow 252S
Tucuman 478S
Clipper 656S
Rosyth 296S
Nilrem 574S
Sunken Lake 221S
Hughenden 213S
HRT Express 329S
Metiskow 648S
Hansman Lake 650S
Provost 545S
Red Deer 63S
Nevis 766S
Paintearth 863S
Tinchebray 972S
Ribstone Creek 892S
Lakesend 508S
Pemukan 932S
Veteran 771S
Monitor 774S
Loyalist 903S
Sedalia 363S
P1567
Halkirk 615S
Heatburg 948S
Ghost Pine 114S
Stettler 769S
Marion Lake 873S
Castor 759S
Three Hills 770S
Rowley 768S
Sullivan Lake 775S
Coronation 773S
Hanna 763S
Richdale 776S
P635
P678
Youngstown 772S
Michichi Creek 802S
Wintering Hills 804S
Coyote Lake 963S
Wheatland 609S
Bullpound 803S
Anderson 801S
Ware Junction 132S
Oakland 946S
Lanfine 959S
Oyen 767S
Sunnybrook 510S
Healthfield 2029S
Crossings 511S
Newell 2075S
WATL
EATL
Excel 910S
Cordel 755S
Nevis 766S
Red Deer 63S
Ghost Pine 114S
Three Hills 770S
Michichi Creek 802S
Wheatland 609S
Wintering Hills 804S
Coyote Lake 963S
Bullpound 803S
Anderson 801S
Ware Junction 132S
Oakland 946S
Lanfine 959S
Oyen 767S
Youngstown 772S
Richdale 776S
Hanna 763S
Sullivan Lake 775S
Rowley 768S
Halkirk 615S
Heatburg 948S
Ghost Pine 114S
Stettler 769S
Marion Lake 873S
Castor 759S
Three Hills 770S
Tinchebray 972S
Ribstone Creek 892S
Lakesend 508S
Pemukan 932S
Veteran 771S
Monitor 774S
Loyalist 903S
Sedalia 363S
Metiskow 648S
Hansman Lake 650S
Provost 545S
Sunken Lake 221S
Hughenden 213S
HRT Express 329S
Nilrem 574S
Rosyth 296S
Clipper 656S
Tucuman 478S
Jarrow 252S
Sedgewick 137S
Hardisty 377S
Killarney Lake 267S
Hayter 277S
Lloydminster 716S
Cochin Pipeline
Fabyan 968S
Briker 880S
Wainwright 51S
Edgerton 899S
Kitscoty 705S
Hill 751S
Irish Creek 706S
Vermilion 710S
Grizzly Bear 708S
Bonnyville 700S
Lindbergh 969S
St. Paul 707S
Norberg 936S
Lac La Biche 157S
Whitbylake 819S
Vilna 777S
Watt Lake 956S
Vegreville 709S
Vincent 2019S
Kinsella 926S
Buffalo Creek 526S
Bardo 197S
North Holden 395S
Strome 223S
Heisler 764S
Big Knife Creek 843S
Mannix Mine 765S
Bigfoot 756S
Battle River 757SS
Paintearth 863S
Nevis 766S
Red Deer 63S
Sunnybrook 510S
Healthfield 2029S
Crossings 511S
Newell 2075S
WATL
EATL
Excel 910S
P937
P635
P678
P1567
174L
701L
912L
954L
1047L
948L
715L
885L
9L80
9L79
9L953
9L27
9L16
9L59
9L93
9L20
6L02
6L03
6L05
6L06
6L08
6L09
6L12
6L15
6L17
6L25
6L44
6L56
6L65
6L92
6L93
6L94
6L95
7L16
7L25
7L50
7L65
7L77
7L92
7L93
7L99
7L117
7L129
7L130
7L134
7L137
7L139
7L143
7L153
7L159
7L171
7L794
7LA92
7LA139
7LA159
7LA701
7LA129
7L70
7L53
7L66
7L14
7L42
7L749
7LB749
7L79
7L696
7L110
7L127
7L224
7L116
7L132
7L128
7L85
9L100
9L99
9L97
9L24
9L38
9L12
9L29
9L51
9L966
6L21
6L09
6L25
6L12
6L17
6L03
6L02
6L44
6L56
6L09
6L15
6L09
6L09
6L09

Figure A2-28: 2019 Summer Peak Pre-Project Case A - Contingency of 9L29 (Oakland 946S - Coyote Lake 963S)

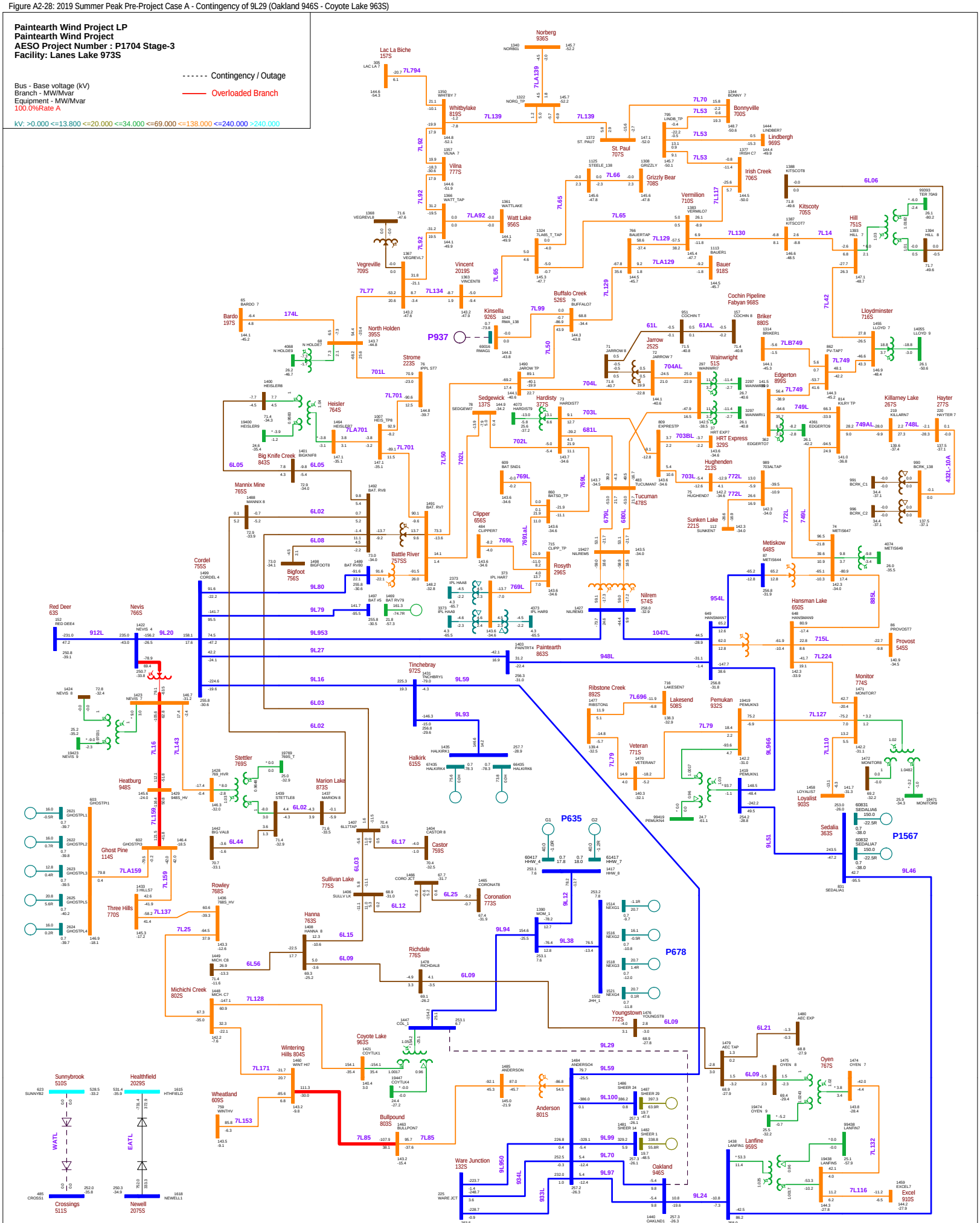

Figure A2-29: 2019 Summer Peak Pre-Project Case A - Contingency of 912L\9L912 (Red Deer 63S - Nevis 766S)

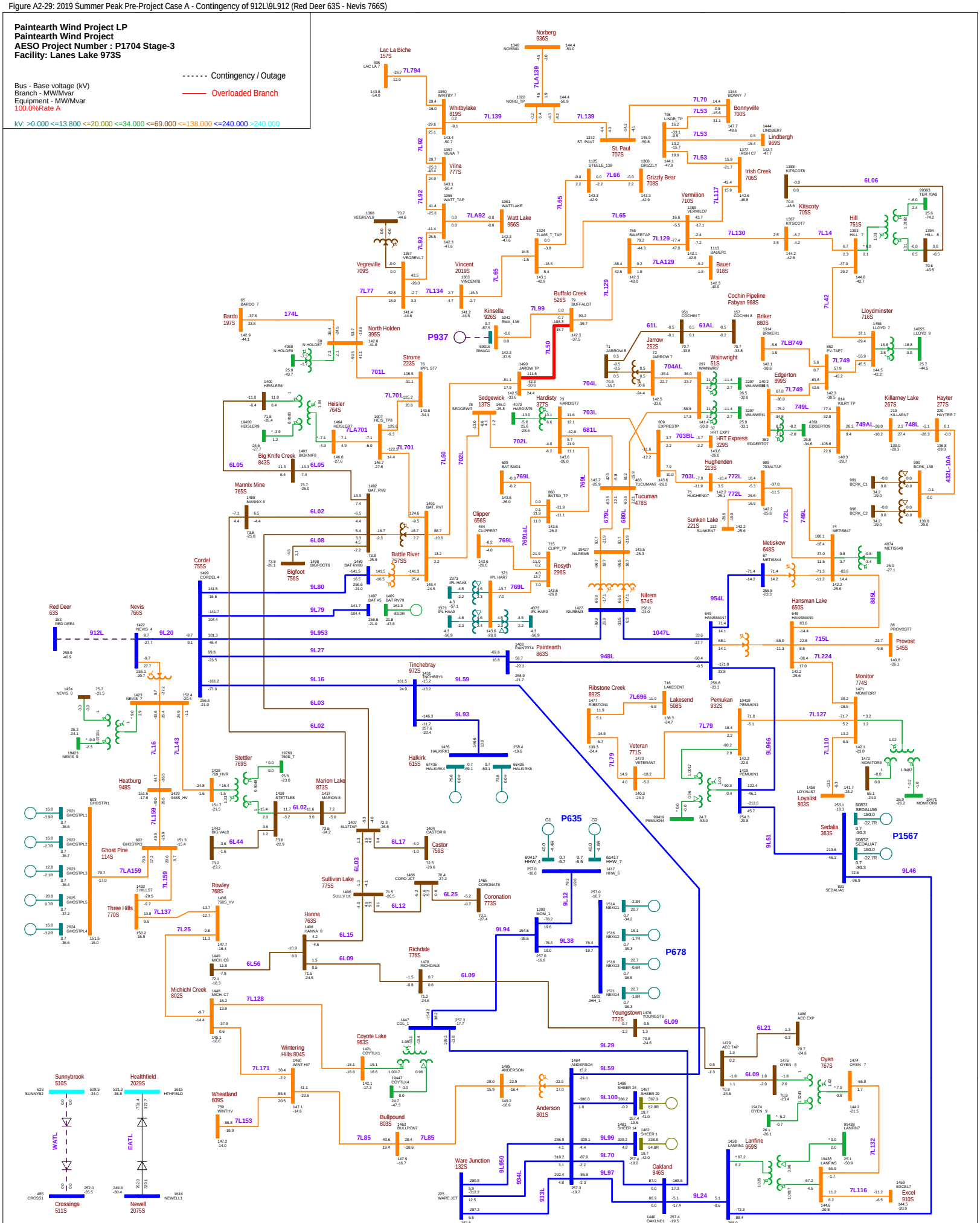
Paintearth Wind Project LP
Paintearth Wind Project
AESO Project Number : P1704 Stage-3
Facility: Lanes Lake 973S
Contingency / Outage
Overloaded Branch
Bus - Base voltage (kV)
Branch - MW/Mvar
Equipment - MW/Mvar
100.0%Rate A
kV: >0.000 <=13.800 <=20.000 <=34.000 <=69.000 <=138.000 <=240.000 >240.000
Norberg 936S
Lac La Biche 157S
Whitbylake 819S
Vilna 777S
Watt Lake 956S
Vegreville 709S
Vincent 2019S
Kinsella 926S
Buffalo Creek 526S
St. Paul 707S
Bonnyville 700S
Lindbergh 969S
Irish Creek 706S
Grizzly Bear 708S
Vermilion 710S
Bauer 918S
Kitscoty 705S
Hill 751S
Lloydminster 716S
Cochin Pipeline
Fabyan 968S
Briker 880S
Jarrow 252S
Wainwright 51S
Edgerton 899S
Killarney Lake 267S
Hayter 277S
Bardo 197S
North Holden 395S
Strome 223S
Heisler 764S
Big Knife Creek 843S
Sedgewick 137S
Hardisty 377S
HRT Express 329S
Hughenden 213S
Sunken Lake 221S
Tucuman 478S
Mannix 765S
Cordel 755S
Battle River 757SS
Clipper 656S
Rosyth 296S
Nilrem 574S
Metiskow 648S
Hansman Lake 650S
Provost 545S
Red Deer 63S
Nevis 766S
Bigfoot 756S
Paintearth 863S
Tinchebray 972S
Ribstone Creek 892S
Lakesend 508S
Pemukan 932S
Monitor 774S
Veteran 771S
Loyalist 903S
Sedalia 363S
Halkirk 615S
Stettler 769S
Heatburg 948S
Marion Lake 873S
Ghost Pine 114S
Three Hills 770S
Rowley 768S
Sullivan Lake 775S
Hanna 763S
Richdale 776S
Castor 759S
Coronation 773S
Michichi Creek 802S
Wintering Hills 804S
Coyote Lake 963S
Wheatland 609S
Bullpound 803S
Anderson 801S
Youngstown 772S
Oyen 767S
Lanfine 959S
Excel 910S
Ware Junction 132S
Oakland 946S
Sunnybrook 510S
Healthfield 2029S
Crossings 511S
Newell 2075S
P937
P635
P678
P1567
7L794
7L139
7LA139
7L92
7LA92
7L93
7L65
7LA129
7L129
7L130
7L117
7L53
7L70
7L66
7L14
7L749
7LB749
7L42
7L77
7L134
7L99
7L50
7L701
7LA701
7L702
7L703
7L704
7L704AL
7L703BL
7L703L
7L681
7L679L
7L680L
7L769
7L691AL
7L772L
7L749L
7L748L
7L749AL
7L432L-10A
7L61
7L61AL
6L05
6L02
6L08
6L80
6L79
6L03
6L16
6L143
6L159
6L44
6L137
6L25
6L56
6L09
6L12
6L15
6L17
6L94
6L38
6L99
6L97
6L24
6L21
6L132
6L116
6L110
6L127
6L224
6L06
9L953
9L27
9L16
9L59
9L93
9L80
9L20
9L29
9L100
9L70
9L950
9L934
9L933
9L966
9L51
9L46
912L
1047L
954L
948L
715L
885L
7LA159
7LA701
7LA129
7LA92
7LA1
7LA2
7LA3
7LA4
7LA5
7LA6
7LA7
7LA8
7LA9
7LA10
7LA11
7LA12
7LA13
7LA14
7LA15
7LA16
7LA17
7LA18
7LA19
7LA20
7LA21
7LA22
7LA23
7LA24
7LA25
7LA26
7LA27
7LA28
7LA29
7LA30
7LA31
7LA32
7LA33
7LA34
7LA35
7LA36
7LA37
7LA38
7LA39
7LA40
7LA41
7LA42
7LA43
7LA44
7LA45
7LA46
7LA47
7LA48
7LA49
7LA50
7LA51
7LA52
7LA53
7LA54
7LA55
7LA56
7LA57
7LA58
7LA59
7LA60
7LA61
7LA62
7LA63
7LA64
7LA65
7LA66
7LA67
7LA68
7LA69
7LA70
7LA71
7LA72
7LA73
7LA74
7LA75
7LA76
7LA77
7LA78
7LA79
7LA80
7LA81
7LA82
7LA83
7LA84
7LA85
7LA86
7LA87
7LA88
7LA89
7LA90
7LA91
7LA92
7LA93
7LA94
7LA95
7LA96
7LA97
7LA98
7LA99
7LA100
7LA101
7LA102
7LA103
7LA104
7LA105
7LA106
7LA107
7LA108
7LA109
7LA110
7LA111
7LA112
7LA113
7LA114
7LA115
7LA116
7LA117
7LA118
7LA119
7LA120
7LA121
7LA122
7LA123
7LA124
7LA125
7LA126
7LA127
7LA128
7LA129
7LA130
7LA131
7LA132
7LA133
7LA134
7LA135
7LA136
7LA137
7LA138
7LA139
7LA140
7LA141
7LA142
7LA143
7LA144
7LA145
7LA146
7LA147
7LA148
7LA149
7LA150
7LA151
7LA152
7LA153
7LA154
7LA155
7LA156
7LA157
7LA158
7LA159
7LA160
7LA161
7LA162
7LA163
7LA164
7LA165
7LA166
7LA167
7LA168
7LA169
7LA170
7LA171
7LA172
7LA173
7LA174
7LA175
7LA176
7LA177
7LA178
7LA179
7LA180
7LA181
7LA182
7LA183
7LA184
7LA185
7LA186
7LA187
7LA188
7LA189
7LA190
7LA191
7LA192
7LA193
7LA194
7LA195
7LA196
7LA197
7LA198
7LA199
7LA200
7LA201
7LA202
7LA203
7LA204
7LA205
7LA206
7LA207
7LA208
7LA209
7LA210
7LA211
7LA212
7LA213
7LA214
7LA215
7LA216
7LA217
7LA218
7LA219
7LA220
7LA221
7LA222
7LA223
7LA224
7LA225
7LA226
7LA227
7LA228
7LA229
7LA230
7LA231
7LA232
7LA233
7LA234
7LA235
7LA236
7LA237
7LA238
7LA239
7LA240
7LA241
7LA242
7LA243
7LA244
7LA245
7LA246
7LA247
7LA248
7LA249
7LA250
7LA251
7LA252
7LA253
7LA254
7LA255
7LA256
7LA257
7LA258
7LA259
7LA260
7LA261
7LA262
7LA263
7LA264
7LA265
7LA266
7LA267
7LA268
7LA269
7LA270
7LA271
7LA272
7LA273
7LA274
7LA275
7LA276
7LA277
7LA278
7LA279
7LA280
7LA281
7LA282
7LA283
7LA284
7LA285
7LA286
7LA287
7LA288
7LA289
7LA290
7LA291
7LA292
7LA293
7LA294
7LA295
7LA296
7LA297
7LA298
7LA299
7LA300
7LA301
7LA302
7LA303
7LA304
7LA305
7LA306
7LA307
7LA308
7LA309
7LA310
7LA311
7LA312
7LA313
7LA314
7LA315
7LA316
7LA317
7LA318
7LA319
7LA320
7LA321
7LA322
7LA323
7LA324
7LA325
7LA326
7LA327
7LA328
7LA329
7LA330
7LA331
7LA332
7LA333
7LA334
7LA335
7LA336
7LA337
7LA338
7LA339
7LA340
7LA341
7LA342
7LA343
7LA344
7LA345
7LA346
7LA347
7LA348
7LA349
7LA350
7LA351
7LA352
7LA353
7LA354
7LA355
7LA356
7LA357
7LA358
7LA359
7LA360
7LA361
7LA362
7LA363
7LA364
7LA365
7LA366
7LA367
7LA368
7LA369
7LA370
7LA371
7LA372
7LA373
7LA374
7LA375
7LA376
7LA377
7LA378
7LA379
7LA380
7LA381
7LA382
7LA383
7LA384
7LA385
7LA386
7LA387
7LA388
7LA389
7LA390
7LA391
7LA392
7LA393
7LA394
7LA395
7LA396
7LA397
7LA398
7LA399
7LA400
7LA401
7LA402
7LA403
7LA404
7LA405
7LA406
7LA407
7LA408
7LA409
7LA410
7LA411
7LA412
7LA413
7LA414
7LA415
7LA416
7LA417
7LA418
7LA419
7LA420
7LA421
7LA422
7LA423
7LA424
7LA425
7LA426
7LA427
7LA428
7LA429
7LA430
7LA431
7LA432
7LA433
7LA434
7LA435
7LA436
7LA437
7LA438
7LA439
7LA440
7LA441
7LA442
7LA443
7LA444
7LA445
7LA446
7LA447
7LA448
7LA449
7LA450
7LA451
7LA452
7LA453
7LA454
7LA455
7LA456
7LA457
7LA458
7LA459
7LA460
7LA461
7LA462
7LA463
7LA464
7LA465
7LA466
7LA467
7LA468
7LA469
7LA470
7LA471
7LA472
7LA473
7LA474
7LA475
7LA476
7LA477
7LA478
7LA479
7LA480
7LA481
7LA482
7LA483
7LA484
7LA485
7LA486
7LA487
7LA488
7LA489
7LA490
7LA491
7LA492
7LA493
7LA494
7LA495
7LA496
7LA497
7LA498
7LA499
7LA500
7LA501
7LA502
7LA503
7LA504
7LA505
7LA506
7LA507
7LA508
7LA509
7LA510
7LA511
7LA512
7LA513
7LA514
7LA515
7LA516
7LA517
7LA518
7LA519
7LA520
7LA521
7LA522
7LA523
7LA524
7LA525
7LA526
7LA527
7LA528
7LA529
7LA530
7LA531
7LA532
7LA533
7LA534
7LA535
7LA536
7LA537
7LA538
7LA539
7LA540
7LA541
7LA542
7LA543
7LA544
7LA545
7LA546
7LA547
7LA548
7LA549
7LA550
7LA551
7LA552
7LA553
7LA554
7LA555
7LA556
7LA557
7LA558
7LA559
7LA560
7LA561
7LA562
7LA563
7LA564
7LA565
7LA566
7LA567
7LA568
7LA569
7LA570
7LA571
7LA572
7LA573
7LA574
7LA575
7LA576
7LA577
7LA578
7LA579
7LA580
7LA581
7LA582
7LA583
7LA584
7LA585
7LA586
7LA587
7LA588
7LA589
7LA590
7LA591
7LA592
7LA593
7LA594
7LA595
7LA596
7LA597
7LA598
7LA599
7LA600
7LA601
7LA602
7LA603
7LA604
7LA605
7LA606
7LA607
7LA608
7LA609
7LA610
7LA611
7LA612
7LA613
7LA614
7LA615
7LA616
7LA617
7LA618
7LA619
7LA620
7LA621
7LA622
7LA623
7LA624
7LA625
7LA626
7LA627
7LA628
7LA629
7LA630
7LA631
7LA632
7LA633
7LA634
7LA635
7LA636
7LA637
7LA638
7LA639
7LA640
7LA641
7LA642
7LA643
7LA644
7LA645
7LA646
7LA647
7LA648
7LA649
7LA650
7LA651
7LA652
7LA653
7LA654
7LA655
7LA656
7LA657
7LA658
7LA659
7LA660
7LA661
7LA662
7LA663
7LA664
7LA665
7LA666
7LA667
7LA668
7LA669
7LA670
7LA671
7LA672
7LA673
7LA674
7LA675
7LA676
7LA677
7LA678
7LA679
7LA680
7LA681
7LA682
7LA683
7LA684
7LA685
7LA686
7LA687
7LA688
7LA689
7LA690
7LA691
7LA692
7LA693
7LA694
7LA695
7LA696
7LA697
7LA698
7LA699
7LA700
7LA701
7LA702
7LA703
7LA704
7LA705
7LA706
7LA707
7LA708
7LA709
7LA710
7LA711
7LA712
7LA713
7LA714
7LA715
7LA716
7LA717
7LA718
7LA719
7LA720
7LA721
7LA722
7LA723
7LA724
7LA725
7LA726
7LA727
7LA728
7LA729
7LA730
7LA731
7LA732
7LA733
7LA734
7LA735
7LA736
7LA737
7LA738
7LA739
7LA740
7LA741
7LA742
7LA743
7LA744
7LA745
7LA746
7LA747
7LA748
7LA749
7LA750
7LA751
7LA752
7LA753
7LA754
7LA755
7LA756
7LA757
7LA758
7LA759
7LA760
7LA761
7LA762
7LA763
7LA764
7LA765
7LA766
7LA767
7LA768
7LA769
7LA770
7LA771
7LA772
7LA773
7LA774
7LA775
7LA776
7LA777
7LA778
7LA779
7LA780
7LA781
7LA782
7LA783
7LA784
7LA785
7LA786
7LA787
7LA788
7LA789
7LA790
7LA791
7LA792
7LA793
7LA794
7LA795
7LA796
7LA797
7LA798
7LA799
7LA800
7LA801
7LA802
7LA803
7LA804
7LA805
7LA806
7LA807
7LA808
7LA809
7LA810
7LA811
7LA812
7LA813
7LA814
7LA815
7LA816
7LA817
7LA818
7LA819
7LA820
7LA821
7LA822
7LA823
7LA824
7LA825
7LA826
7LA827
7LA828
7LA829
7LA830
7LA831
7LA832
7LA833
7LA834
7LA835
7LA836
7LA837
7LA838
7LA839
7LA840
7LA841
7LA842
7LA843
7LA844
7LA845
7LA846
7LA847
7LA848
7LA849
7LA850
7LA851
7LA852
7LA853
7LA854
7LA855
7LA856
7LA857
7LA858
7LA859
7LA860
7LA861
7LA862
7LA863
7LA864
7LA865
7LA866
7LA867
7LA868
7LA869
7LA870
7LA871
7LA872
7LA873
7LA874
7LA875
7LA876
7LA877
7LA878
7LA879
7LA880
7LA881
7LA882
7LA883
7LA884
7LA885
7LA886
7LA887
7LA888
7LA889
7LA890
7LA891
7LA892
7LA893
7LA894
7LA895
7LA896
7LA897
7LA898
7LA899
7LA900
7LA901
7LA902
7LA903
7LA904
7LA905
7LA906
7LA907
7LA908
7LA909
7LA910
7LA911
7LA912
7LA913
7LA914
7LA915
7LA916
7LA917
7LA918
7LA919
7LA920
7LA921
7LA922
7LA923
7LA924
7LA925
7LA926
7LA927
7LA928
7LA929
7LA930
7LA931
7LA932
7LA933
7LA934
7LA935
7LA936
7LA937
7LA938
7LA939
7LA940
7LA941
7LA942
7LA943
7LA944
7LA945
7LA946
7LA947
7LA948
7LA949
7LA950
7LA951
7LA952
7LA953
7LA954
7LA955
7LA956
7LA957
7LA958
7LA959
7LA960
7LA961
7LA962
7LA963
7LA964
7LA965
7LA966
7LA967
7LA968
7LA969
7LA970
7LA971
7LA972
7LA973
7LA974
7LA975
7LA976
7LA977
7LA978
7LA979
7LA980
7LA981
7LA982
7LA983
7LA984
7LA985
7LA986
7LA987
7LA988
7LA989
7LA990
7LA991
7LA992
7LA993
7LA994
7LA995
7LA996
7LA997
7LA998
7LA999
7LA1000
7LA1001
7LA1002
7LA1003
7LA1004
7LA1005
7LA1006
7LA1007
7LA1008
7LA1009
7LA1010
7LA1011
7LA1012
7LA1013
7LA1014
7LA1015
7LA1016
7LA1017
7LA1018
7LA1019
7LA1020
7LA1021
7LA1022
7LA1023
7LA1024
7LA1025
7LA1026
7LA1027
7LA1028
7LA1029
7LA1030
7LA1031
7LA1032
7LA1033
7LA1034
7LA1035
7LA1036
7LA1037
7LA1038
7LA1039
7LA1040
7LA1041
7LA1042
7LA1043
7LA1044
7LA1045
7LA1046
7LA1047
7LA1048
7LA1049
7LA1050
7LA1051
7LA1052
7LA1053
7LA1054
7LA1055
7LA1056
7LA1057
7LA1058
7LA1059
7LA1060
7LA1061
7LA1062
7LA1063
7LA1064
7LA1065
7LA1066
7LA1067
7LA1068
7LA1069
7LA1070
7LA1071
7LA1072
7LA1073
7LA1074
7LA1075
7LA1076
7LA1077
7LA1078
7LA1079
7LA1080
7LA1081
7LA1082
7LA1083
7LA1084
7LA1085
7LA1086
7LA1087
7LA1088
7LA1089
7LA1090
7LA1091
7LA1092
7LA1093
7LA1094
7LA1095
7LA1096
7LA1097
7LA1098
7LA1099
7LA1100
7LA1101
7LA1102
7LA1103
7LA1104
7LA1105
7LA1106
7LA1107
7LA1108
7LA1109
7LA1110
7LA1111
7LA1112
7LA1113
7LA1114
7LA1115
7LA1116
7LA1117
7LA1118
7LA1119
7LA1120
7LA1121
7LA1122
7LA1123
7LA1124
7LA1125
7LA1126
7LA1127
7LA1128
7LA1129
7LA1130
7LA1131
7LA1132
7LA1133
7LA1134
7LA1135
7LA1136
7LA1137
7LA1138
7LA1139
7LA1140
7LA1141
7LA1142
7LA1143
7LA1144
7LA1145
7LA1146
7LA1147
7LA1148
7LA1149
7LA1150
7LA1151
7LA1152
7LA1153
7LA1154
7LA1155
7LA1156
7LA1157
7LA1158
7LA1159
7LA1160
7LA1161
7LA1162
7LA1163
7LA1164
7LA1165
7LA1166
7LA1167
7LA1168
7LA1169
7LA1170
7LA1171
7LA1172
7LA1173
7LA1174
7LA1175
7LA1176
7LA1177
7LA1178
7LA1179
7LA1180
7LA1181
7LA1182
7LA1183
7LA1184
7LA1185
7LA1186
7LA1187
7LA1188
7LA1189
7LA1190
7LA1191
7LA1192
7LA1193
7LA1194
7LA1195
7LA1196
7LA1197
7LA1198
7LA1199
7LA1200
7LA1201
7LA1202
7LA1203
7LA1204
7LA1205
7LA1206
7LA1207
7LA1208
7LA1209
7LA1210
7LA1211
7LA1212
7LA1213
7LA1214
7LA1215
7LA1216
7LA1217
7LA1218
7LA1219
7LA1220
7LA1221
7LA1222
7LA1223
7LA1224
7LA1225
7LA1226
7LA1227
7LA1228
7LA1229
7LA1230
7LA1231
7LA1232
7LA1233
7LA1234
7LA1235
7LA1236
7LA1237
7LA1238
7LA1239
7LA1240
7LA1241
7LA1242
7LA1243
7LA1244
7LA1245
7LA1246
7LA1247
7LA1248
7LA1249
7LA1250
7LA1251
7LA1252
7LA1253
7LA1254
7LA1255
7LA1256
7LA1257
7LA1258
7LA1259
7LA1260
7LA1261
7LA1262
7LA1263
7LA1264
7LA1265
7LA1266
7LA1267
7LA1268
7LA1269
7LA1270
7LA1271
7LA1272
7LA1273
7LA1274
7LA1275
7LA1276
7LA1277
7LA1278
7LA1279
7LA1280
7LA1281
7LA1282
7LA1283
7LA1284
7LA1285
7LA1286
7LA1287
7LA1288
7LA1289
7LA1290
7LA1291
7LA1292
7LA1293
7LA1294
7LA1295
7LA1296
7LA1297
7LA1298
7LA1299
7LA1300
7LA1301
7LA1302
7LA1303
7LA1304
7LA1305
7LA1306
7LA1307
7LA1308
7LA1309
7LA1310
7LA1311
7LA1312
7LA1313
7LA1314
7LA1315
7LA1316
7LA1317
7LA1318
7LA1319
7LA1320
7LA1321
7LA1322
7LA1323
7LA1324
7LA1325
7LA1326
7LA1327
7LA1328
7LA1329
7LA1330
7LA1331
7LA1332
7LA1333
7LA1334
7LA1335
7LA1336
7LA1337
7LA1338
7LA1339
7LA1340
7LA1341
7LA1342
7LA1343
7LA1344
7LA1345
7LA1346
7LA1347
7LA1348
7LA1349
7LA1350
7LA1351
7LA1352
7LA1353
7LA1354
7LA1355
7LA1356
7LA1357
7LA1358
7LA1359
7LA1360
7LA1361
7LA1362
7LA1363
7LA1364
7LA1365
7LA1366
7LA1367
7LA1368
7LA1369
7LA1370
7LA1371
7LA1372
7LA1373
7LA1374
7LA1375
7LA1376
7LA1377
7LA1378
7LA1379
7LA1380
7LA1381
7LA1382
7LA1383
7LA1384
7LA1385
7LA1386
7LA1387
7LA1388
7LA1389
7LA1390
7LA1391
7LA1392
7LA1393
7LA1394
7LA1395
7LA1396
7LA1397
7LA1398
7LA1399
7LA1400
7LA1401
7LA1402
7LA1403
7LA1404
7LA1405
7LA1406
7LA1407
7LA1408
7LA1409
7LA1410
7LA1411
7LA1412
7LA1413
7LA1414
7LA1415
7LA1416
7LA1417
7LA1418
7LA1419
7LA1420
7LA1421
7LA1422
7LA1423
7LA1424
7LA1425
7LA1426
7LA1427
7LA1428
7LA1429
7LA1430
7LA1431
7LA1432
7LA1433
7LA1434
7LA1435
7LA1436
7LA1437
7LA1438
7LA1439
7LA1440
7LA1441
7LA1442
7LA1443
7LA1444
7LA1445
7LA1446
7LA1447
7LA1448
7LA1449
7LA1450
7LA1451
7LA1452
7LA1453
7LA1454
7LA1455
7LA1456
7LA1457
7LA1458
7LA1459
7LA1460
7LA1461
7LA1462
7LA1463
7LA1464
7LA1465
7LA1466
7LA1467
7LA1468
7LA1469
7LA1470
7LA1471
7LA1472
7LA1473
7LA1474
7LA1475
7LA1476
7LA1477
7LA1478
7LA1479
7LA1480
7LA1481
7LA1482
7LA1483
7LA1484
7LA1485
7LA1486
7LA1487
7LA1488
7LA1489
7LA1490
7LA1491
7LA1492
7LA1493
7LA1494
7LA1495
7LA1496
7LA1497
7LA1498
7LA1499
7LA1500
7LA1501
7LA1502
7LA1503
7LA1504
7LA1505
7LA1506
7LA1507
7LA1508
7LA1509
7LA1510
7LA1511
7LA1512
7LA1513
7LA1514
7LA1515
7LA1516
7LA1517
7LA1518
7LA1519
7LA1520
7LA1521
7LA1522
7LA1523
7LA1524
7LA1525
7LA1526
7LA1527
7LA1528
7LA1529
7LA1530
7LA1531
7LA1532
7LA1533
7LA1534
7LA1535
7LA1536
7LA1537
7LA1538
7LA1539
7LA1540
7LA1541
7LA1542
7LA1543
7LA1544
7LA1545
7LA1546
7LA1547
7LA1548
7LA1549
7LA1550
7LA1551
7LA1552
7LA1553
7LA1554
7LA1555
7LA1556
7LA1557
7LA1558
7LA1559
7LA1560
7LA1561
7LA1562
7LA1563
7LA1564
7LA1565
7LA1566
7LA1567
7LA1568
7LA1569
7LA1570
7LA1571
7LA1572
7LA1573
7LA1574
7LA1575
7LA1576
7LA1577
7LA1578
7LA1579
7LA1580
7LA1581
7LA1582
7LA1583
7LA1584
7LA1585
7LA1586
7LA1587
7LA1588
7LA1589
7LA1590
7LA1591
7LA1592
7LA1593
7LA1594
7LA1595
7LA1596
7LA1597
7LA1598
7LA1599
7LA1600
7LA1601
7LA1602
7LA1603
7LA1604
7LA1605
7LA1606
7LA1607
7LA1608
7LA1609
7LA1610
7LA1611
7LA1612
7LA1613
7LA1614
7LA1615
7LA1616
7LA1617
7LA1618
7LA1619
7LA1620
7LA1621
7LA1622
7LA1623
7LA1624
7LA1625
7LA1626
7LA1627
7LA1628
7LA1629
7LA1630
7LA1631
7LA1632
7LA1633
7LA1634
7LA1635
7LA1636
7LA1637
7LA1638
7LA1639
7LA1640
7LA1641
7LA1642
7LA1643
7LA1644
7LA1645
7LA1646
7LA1647
7LA1648
7LA1649
7LA1650
7LA1651
7LA1652
7LA1653
7LA1654
7LA1655
7LA1656
7LA1657
7LA1658
7LA1659
7LA1660
7LA1661
7LA1662
7LA1663
7LA1664
7LA1665
7LA1666
7LA1667
7LA1668
7LA1669
7LA1670
7LA1671
7LA1672
7LA1673
7LA1674
7LA1675
7LA1676
7LA1677
7LA1678
7LA1679
7LA1680
7LA1681
7LA1682
7LA1683
7LA1684
7LA1685
7LA1686
7LA1687
7LA1688
7LA1689
7LA1690
7LA1691
7LA1692
7LA1693
7LA1694
7LA1695
7LA1696
7LA1697
7LA1698
7LA1699
7LA1700
7LA1701
7LA1702
7LA1703
7LA1704
7LA1705
7LA1706
7LA1707
7LA1708
7LA1709
7LA1710
7LA1711
7LA1712
7LA1713
7LA1714
7LA1715
7LA1716
7LA1717
7LA1718
7LA1719
7LA1720
7LA1721
7LA1722
7LA1723
7LA1724
7LA1725
7LA1726
7LA1727
7LA1728
7LA1729
7LA1730
7LA1731
7LA1732
7LA1733
7LA1734
7LA1735
7LA1736
7LA1737
7LA1738
7LA1739
7LA1740
7LA1741
7LA1742
7LA1743
7LA1744
7LA1745
7LA1746
7LA1747
7LA1748
7LA1749
7LA1750
7LA1751
7LA1752
7LA1753
7LA1754
7LA1755
7LA1756
7LA1757
7LA1758
7LA1759
7LA1760
7LA1761
7LA1762
7LA1763
7LA1764
7LA1765
7LA1766
7LA1767
7LA1768
7LA1769
7LA1770
7LA1771
7LA1772
7LA1773
7LA1774
7LA1775
7LA1776
7LA1777
7LA1778
7LA1779
7LA1780
7LA1781
7LA1782
7LA1783
7LA1784
7LA1785
7LA1786
7LA1787
7LA1788
7LA1789
7LA1790
7LA1791
7LA1792
7LA1793
7LA1794
7LA1795
7LA1796
7LA1797
7LA1798
7LA1799
7LA1800
7LA1801
7LA1802
7LA1803
7LA1804
7LA1805
7LA1806
7LA1807
7LA1808
7LA1809
7LA1810
7LA1811
7LA1812
7LA1813
7LA1814
7LA1815
7LA1816
7LA1817
7LA1818
7LA1819
7LA1820
7LA1821
7LA1822
7LA1823
7LA1824
7LA1825
7LA1826
7LA1827
7LA1828
7LA1829
7LA1830
7LA1831
7LA1832
7LA1833
7LA1834
7LA1835
7LA1836
7LA1837
7LA1838
7LA1839
7LA1840
7LA1841
7LA1842
7LA1843
7LA1844
7LA1845
7LA1846
7LA1847
7LA1848
7LA1849
7LA1850
7LA1851
7LA1852
7LA1853
7LA1854
7LA1855
7LA1856
7LA1857
7LA1858
7LA1859
7LA1860
7LA1861
7LA1862
7LA1863
7LA1864
7LA1865
7LA1866
7LA1867
7LA1868
7LA1869
7LA1870
7LA1871
7LA1872
7LA1873
7LA1874
7LA1875
7LA1876
7LA1877
7LA1878
7LA1879
7LA1880
7LA1881
7LA1882
7LA1883
7LA1884
7LA1885
7LA1886
7LA1887
7LA1888
7LA1889
7LA1890
7LA1891
7LA1892
7LA1893
7LA1894
7LA1895
7LA1896
7LA1897
7LA1898
7LA1899
7LA1900
7LA1901
7LA1902
7LA1903
7LA1904
7LA1905
7LA1906
7LA1907
7LA1908
7LA1909
7LA1910
7LA1911
7LA1912
7LA1913
7LA1914
7LA1915
7LA1916
7LA1917
7LA1918
7LA1919
7LA1920
7LA1921
7LA1922
7LA1923
7LA1924
7LA1925
7LA1926
7LA1927
7LA1928
7LA1929
7LA1930
7LA1931
7LA1932
7LA1933
7LA1934
7LA1935
7LA1936
7LA1937
7LA1938
7LA1939
7LA1940
7LA1941
7LA1942
7LA1943
7LA1944
7LA1945
7LA1946
7LA1947
7LA1948
7LA1949
7LA1950
7LA1951
7LA1952
7LA1953
7LA1954
7LA1955
7LA1956
7LA1957
7LA1958
7LA1959
7LA1960
7LA1961
7LA1962
7LA1963
7LA1964
7LA1965
7LA1966
7LA1967
7LA1968
7LA1969
7LA1970
7LA1971
7LA1972
7LA1973
7LA1974
7LA1975
7LA1976
7LA1977
7LA1978
7LA1979
7LA1980
7LA1981
7LA1982
7LA1983
7LA1984
7LA1985
7LA1986
7LA1987
7LA1988
7LA1989
7LA1990
7LA1991
7LA1992
7LA1993
7LA1994
7LA1995
7LA1996
7LA1997
7LA1998
7LA1999
7LA2000
7LA2001
7LA2002
7LA2003
7LA2004
7LA2005
7LA2006
7LA2007
7LA2008
7LA2009
7LA2010
7LA2011
7LA2012
7LA2013
7LA2014
7LA2015
7LA2016
7LA2017
7LA2018
7LA2019
7LA2020
7LA2021
7LA2022
7LA2023
7LA2024
7LA2025
7LA2026
7LA2027
7LA2028
7LA2029
7LA2030
7LA2031
7LA2032
7LA2033
7LA2034
7LA2035
7LA2036
7LA2037
7LA2038
7LA2039
7LA2040
7LA2041
7LA2042
7LA2043
7LA2044
7LA2045
7LA2046
7LA2047
7LA2048
7LA2049
7LA2050
7LA2051
7LA2052
7LA2053
7LA2054
7LA2055
7LA2056
7LA2057
7LA2058
7LA2059
7LA2060
7LA2061
7LA2062
7LA2063
7LA2064
7LA2065
7LA2066
7LA2067
7LA2068
7LA2069
7LA2070
7LA2071
7LA2072
7LA2073
7LA2074
7LA2075
7LA2076
7LA2077
7LA2078
7LA2079
7LA2080
7LA2081
7LA2082
7LA2083
7LA2084
7LA2085
7LA2086
7LA2087
7LA2088
7LA2089
7LA2090
7LA2091
7LA2092
7LA2093
7LA2094
7LA2095
7LA2096
7LA2097
7LA2098
7LA2099
7LA2100
7LA2101
7LA2102
7LA2103
7LA2104
7LA2105
7LA2106
7LA2107
7LA2108
7LA2109
7LA2110
7LA2111
7LA2112
7LA2113
7LA2114
7LA2115
7LA2116
7LA2117
7LA2118
7LA2119
7LA2120
7LA2121
7LA2122
7LA2123
7LA2124
7LA2125
7LA2126
7LA2127
7LA2128
7LA2129
7LA2130
7LA2131
7LA2132
7LA2133
7LA2134
7LA2135
7LA2136
7LA2137
7LA2138
7LA2139
7LA2140
7LA2141
7LA2142
7LA2143
7LA2144
7LA2145
7LA2146
7LA2147
7LA2148
7LA2149
7LA2150
7LA2151
7LA2152
7LA2153
7LA2154
7LA2155
7LA2156
7LA2157
7LA2158
7LA2159
7LA2160
7LA2161
7LA2162
7LA2163
7LA2164
7LA2165
7LA2166
7LA2167
7LA2168
7LA2169
7LA2170
7LA2171
7LA2172
7LA2173
7LA2174
7LA2175
7LA2176
7LA2177
7LA2178
7LA2179
7LA2180
7LA2181
7LA2182
7LA2183
7LA2184
7LA2185
7LA2186
7LA2187
7LA2188
7LA2189
7LA2190
7LA2191
7LA2192
7LA2193
7LA2194
7LA2195
7LA2196
7LA2197
7LA2198
7LA2199
7LA2200
7LA2201
7LA2202
7LA2203
7LA2204
7LA2205
7LA2206
7LA2207
7LA2208
7LA2209
7LA2210
7LA2211
7LA2212
7LA2213
7LA2214
7LA2215
7LA2216
7LA2217
7LA2218
7LA2219
7LA2220
7LA2221
7LA2222
7LA2223
7LA2224
7LA2225
7LA2226
7LA2227
7LA2228
7LA2229
7LA2230
7LA2231
7LA2232
7LA2233
7LA2234
7LA2235
7LA2236
7LA2237
7LA2238
7LA2239
7LA2240
7LA2241
7LA2242
7LA2243
7LA2244
7LA2245
7LA2246
7LA2247
7LA2248
7LA2249
7LA2250
7LA2251
7LA2252
7LA2253
7LA2254
7LA2255
7LA2256
7LA2257
7LA2258
7LA2259
7LA2260
7LA2261
7LA2262
7LA2263
7LA2264
7LA2265
7LA2266
7LA2267
7LA2268
7LA2269
7LA2270
7LA2271
7LA2272
7LA2273
7LA2274
7LA2275
7LA2276
7LA2277
7LA2278
7LA2279
7LA2280
7LA2281
7LA2282
7LA2283
7LA2284
7LA2285
7LA2286
7LA2287
7LA2288
7LA2289
7LA2290
7LA2291
7LA2292
7LA2293
7LA2294
7LA2295
7LA2296
7LA2297
7LA2298
7LA2299
7LA2300
7LA2301
7LA2302
7LA2303
7LA2304
7LA2305
7LA2306
7LA2307
7LA2308
7LA2309
7LA2310
7LA2311
7LA2312
7LA2313
7LA2314
7LA2315
7LA2316
7LA2317
7LA2318
7LA2319
7LA2320
7LA2321
7LA2322
7LA2323
7LA2324
7LA2325
7LA2326
7LA2327
7LA2328
7LA2329
7LA2330
7LA2331
7LA2332
7LA2333
7LA2334
7LA2335
7LA2336
7LA2337
7LA2338
7LA2339
7LA2340
7LA2341
7LA2342
7LA2343
7LA2344
7LA2345
7LA2346
7LA2347
7LA2348
7LA2349
7LA2350
7LA2351
7LA2352
7LA2353
7LA2354
7LA2355
7LA2356
7LA2357
7LA2358
7LA2359
7LA2360
7LA2361
7LA2362
7LA2363
7LA2364
7LA2365
7LA2366
7LA2367
7LA2368
7LA2369
7LA2370
7LA2371
7LA2372
7LA2373
7LA2374
7LA2375
7LA2376
7LA2377
7LA2378
7LA2379
7LA2380
7LA2381
7LA2382
7LA2383
7LA2384
7LA2385
7LA2386
7LA2387
7LA2388
7LA2389
7LA2390
7LA2391
7LA2392
7LA2393
7LA2394
7LA2395
7LA2396
7LA2397
7LA2398
7LA2399
7LA2400
7LA2401
7LA2402
7LA2403
7LA2404
7LA2405
7LA2406
7LA2407
7LA2408
7LA2409
7LA2410
7LA2411
7LA2412
7LA2413
7LA2414
7LA2415
7LA2416
7LA2417
7LA2418
7LA2419
7LA2420
7LA2421
7LA2422
7LA2423
7LA2424
7LA2425
7LA2426
7LA2427
7LA2428
7LA2429
7LA2430
7LA2431
7LA2432
7LA2433
7LA2434
7LA2435
7LA2436
7LA2437
7LA2438
7LA2439
7LA2440
7LA2441
7LA2442
7LA2443
7LA2444
7LA2445
7LA2446
7LA2447
7LA2448
7LA2449
7LA2450
7LA2451
7LA2452
7LA2453
7LA2454
7LA2455
7LA2456
7LA2457
7LA2458
7LA2459
7LA2460
7LA2461
7LA2462
7LA2463
7LA2464
7LA2465
7LA2466
7LA2467
7LA2468
7LA2469
7LA2470
7LA2471
7LA2472
7LA2473
7LA2474
7LA2475
7LA2476
7LA2477
7LA2478
7LA2479
7LA2480
7LA2481
7LA2482
7LA2483
7LA2484
7LA2485
7LA2486
7LA2487
7LA2488
7LA2489
7LA2490
7LA2491
7LA2492
7LA2493
7LA2494
7LA2495
7LA2496
7LA2497
7LA2498
7LA2499
7LA2500
7LA2501
7LA2502
7LA2503
7LA2504
7LA2505
7LA2506
7LA2507
7LA2508
7LA2509
7LA2510
7LA2511
7LA2512
7LA2513
7LA2514
7LA2515
7LA2516
7LA2517
7LA2518
7LA2519
7LA2520
7LA2521
7LA2522
7LA2523
7LA2524
7LA2525
7LA2526
7LA2527
7LA2528
7LA2529
7LA2530
7LA2531
7LA2532
7LA2533
7LA2534
7LA2535
7LA2536
7LA2537
7LA2538
7LA2539
7LA2540
7LA2541
7LA2542
7LA2543
7LA2544
7LA2545
7LA2546
7LA2547
7LA2548
7LA2549
7LA2550
7LA2551
7LA2552
7LA2553
7LA2554
7LA2555
7LA2556
7LA2557
7LA2558
7LA2559
7LA2560
7LA2561
7LA2562
7LA2563
7LA2564
7LA2565
7LA2566
7LA2567
7LA2568
7LA2569
7LA2570
7LA2571
7LA2572
7LA2573
7LA2574
7LA2575
7LA2576
7LA2577
7LA2578
7LA2579
7LA2580
7LA2581
7LA2582

Figure A2-30: 2019 Summer Peak Pre-Project Case B - N-0 (System Normal Condition)

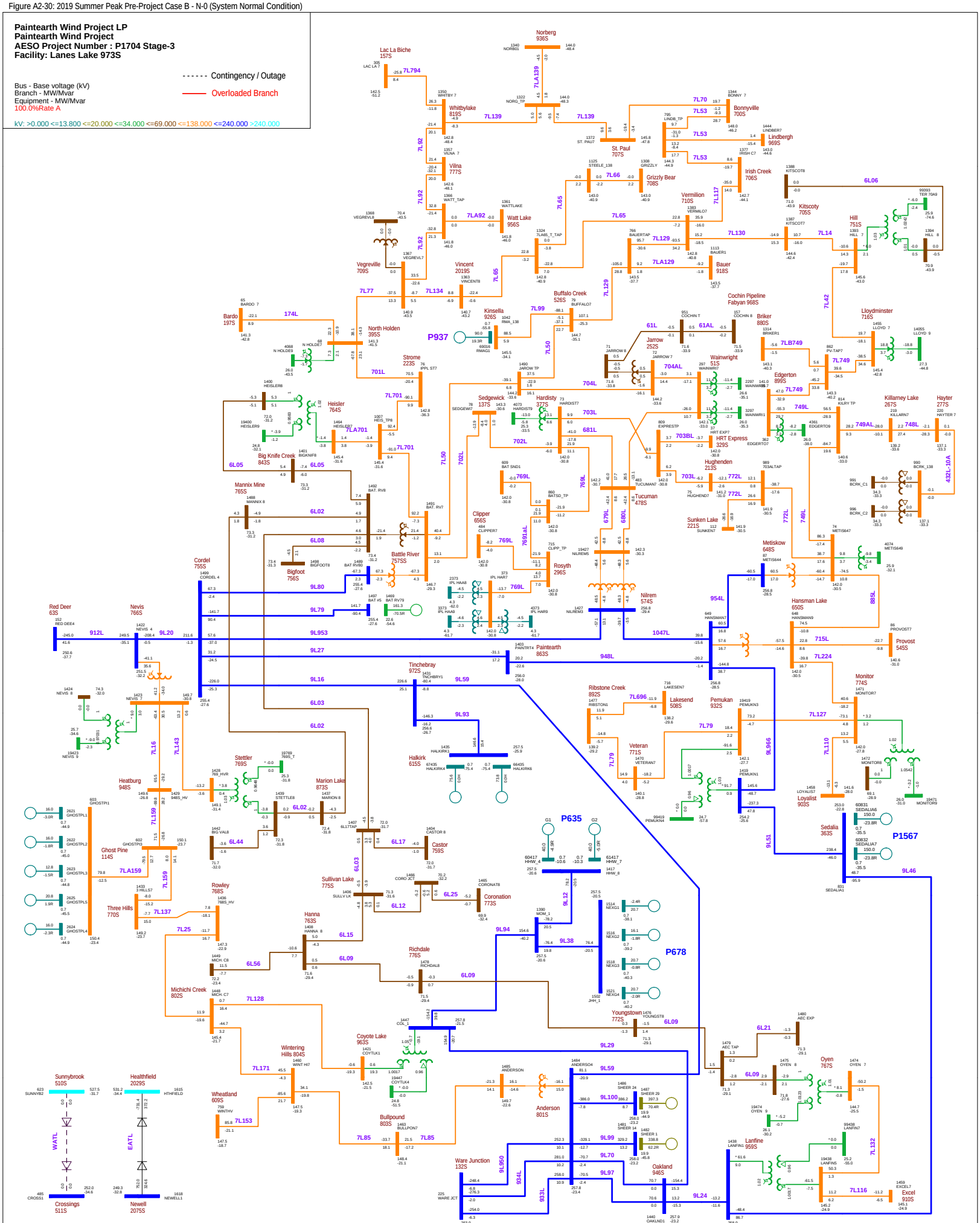

Figure A2-31: 2019 Summer Peak Pre-Project Case B - Contingency of 51ST3 or 51ST4 (Wainwright 51S Transformer T3 or T4)

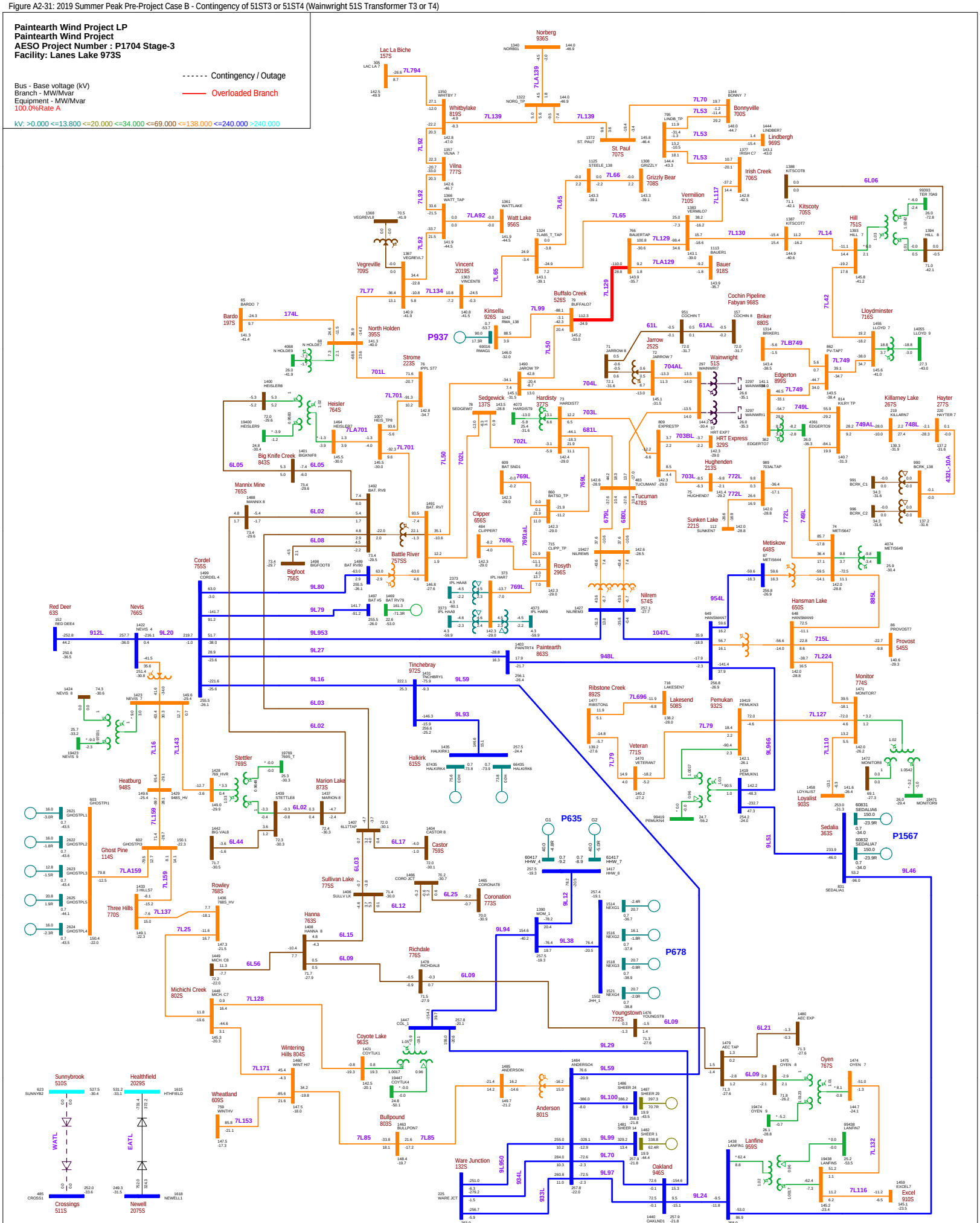

Figure A2-32: 2019 Summer Peak Pre-Project Case B - Contingency of 912L\9L912 (Red Deer 63S - Nevis 766S)

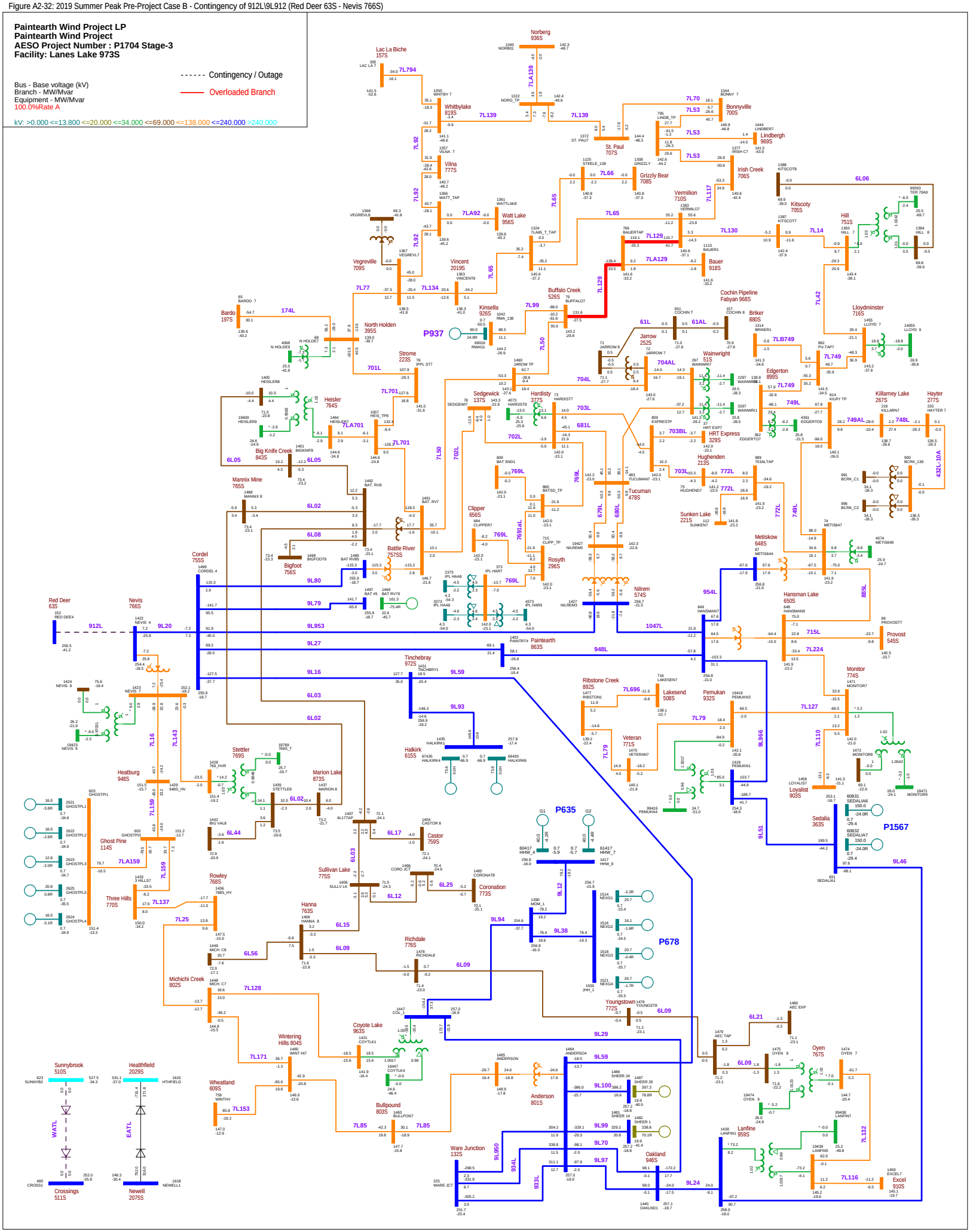

Figure A2-33: 2019 Summer Peak Pre-Project Case B - Contingency of 7L749\749L\7LB749 (Edgerton 899S - Briker 880S - Lloydminster 716S)

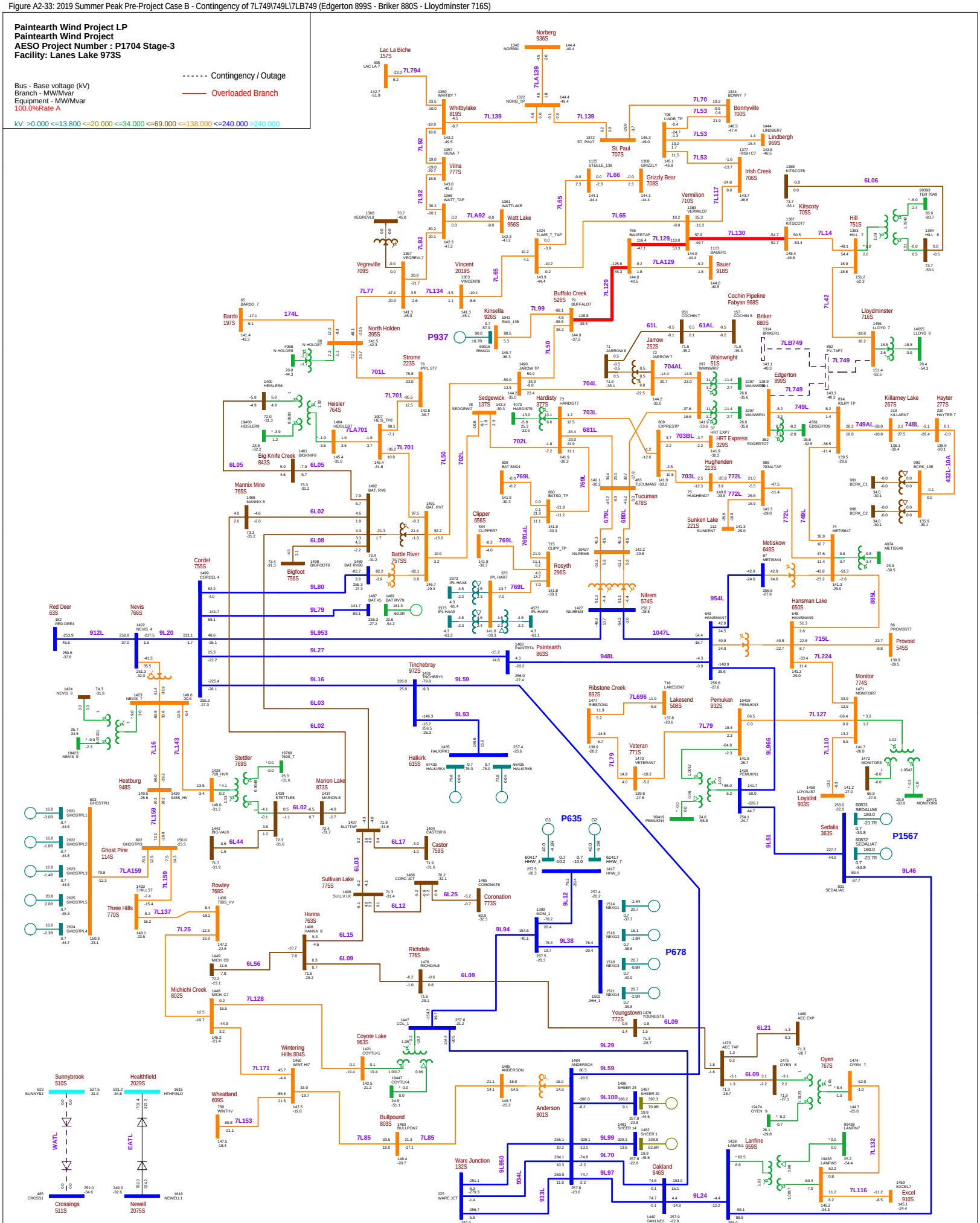
Paintearth Wind Project LP
Paintearth Wind Project
AESO Project Number : P1704 Stage-3
Facility: Lanes Lake 973S
Contingency / Outage
Overloaded Branch
Bus - Base voltage (kV)
Branch - MW/Mvar
Equipment - MW/Mvar
100.0%Rate A
kV: >0.000 <=13.800 <=20.000 <=34.000 <=69.000 <=138.000 <=240.000 >240.000
Norberg 936S
Lac La Biche 157S
Whitbylake 819S
Vilna 777S
Watt Lake 956S
Vegreville 709S
Vincent 2019S
Kinsella 926S
Buffalo Creek 526S
St. Paul 707S
Bonnyville 700S
Lindbergh 969S
Irish Creek 706S
Grizzly Bear 708S
Vermilion 710S
Bauer 918S
Kitscoty 705S
Hill 751S
Lloydminster 716S
Cochin Pipeline
Fabyan 968S
Briker 880S
Edgerton 899S
Wainwright 51S
Jarrow 252S
Hardisty 377S
Sedgewick 137S
Heisler 764S
North Holden 395S
Strome 223S
Bardo 197S
Big Knife Creek 843S
Mannix Mine 765S
Bigfoot 756S
Cordel 755S
Battle River 757SS
Clipper 656S
Rosyth 296S
Nilrem 574S
Tucuman 478S
Sunken Lake 221S
Hughenden 213S
HRT Express 329S
Killarney Lake 267S
Hayter 277S
Metiskow 648S
Hansman Lake 650S
Provost 545S
Red Deer 63S
Nevis 766S
Paintearth 863S
Tinchebray 972S
Ribstone Creek 892S
Lakesend 508S
Pemukan 932S
Monitor 774S
Veteran 771S
Loyalist 903S
Sedalia 363S
Halkirk 615S
Stettler 769S
Heatburg 948S
Marion Lake 873S
Castor 759S
Ghost Pine 114S
Three Hills 770S
Rowley 768S
Sullivan Lake 775S
Coronation 773S
Hanna 763S
Richdale 776S
Michichi Creek 802S
Youngstown 772S
Oyen 767S
Lanfine 959S
Excel 910S
Sunnybrook 510S
Healthfield 2029S
Crossings 511S
Newell 2075S
Wheatland 609S
Wintering Hills 804S
Coyote Lake 963S
Bullpound 803S
Anderson 801S
Ware Junction 132S
Oakland 946S
P937
P635
P678
P1567
7L794
7LA139
7L139
7L92
7LA92
7L93
7L65
7L66
7L70
7L53
7L117
7L130
7L14
6L06
7LA129
7L129
7L42
7L77
7L134
7L65
7L99
7L50
61L
61AL
7LB749
7L749
704AL
704L
703L
681L
702L
703BL
703L
769L
691AL
680L
679L
772L
749L
749AL
748L
432L-10A
701L
7LA701
7L701
6L05
6L02
6L08
6L80
9L80
9L79
9L953
9L27
9L16
6L03
9L59
9L93
6L17
6L25
6L12
9L94
9L38
9L12
6L15
6L09
9L29
9L59
9L100
9L99
9L70
9L97
9L24
9L950
934L
933L
7L171
7L153
7L85
7L128
7L25
7L137
7L159
7LA159
7L169
7L16
7L143
6L44
6L56
6L02
6L03
6L09
6L21
7L132
7L116
7L110
7L127
7L79
7L696
7L224
715L
954L
1047L
948L
885L
9L51
9L46
9L966
912L
9L20
221L
174L
7L749
7LB749
7L42
7L14
6L06
7L130
7L129
7L117
7L65
7L50
7L99
7L92
7L93
7LA92
7L139
7LA139
7L794
7L77
7L134
7L701
7LA701
7L701
7L50
7L702
7L703
7L704
7L704AL
7L749
7L749L
7L748L
7L749AL
7L772L
7L769L
7L691AL
7L680L
7L679L
7L703L
7L703BL
7L702L
7L681L
7L704L
7L749L
7L772L
7L748L
7L749AL
7L749L

Figure A2-34: 2019 Summer Peak Pre-Project Case B - Contingency of 7L42 (Hill 751S - Lloydminster 716S)

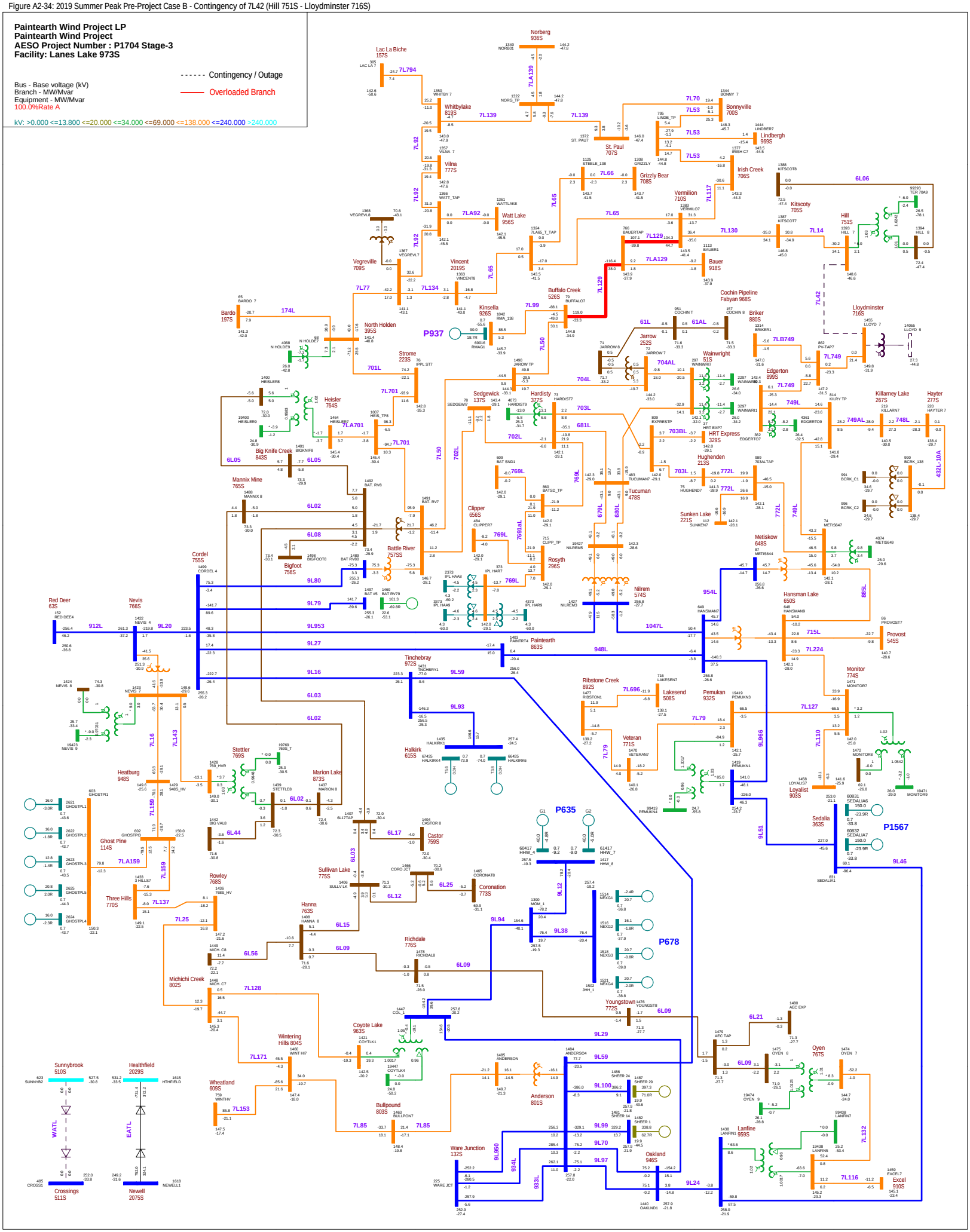

Figure A2-35: 2019 Summer Peak Pre-Project Case B - Contingency of 899ST3A (Edgerton 899S Transformer T3A)

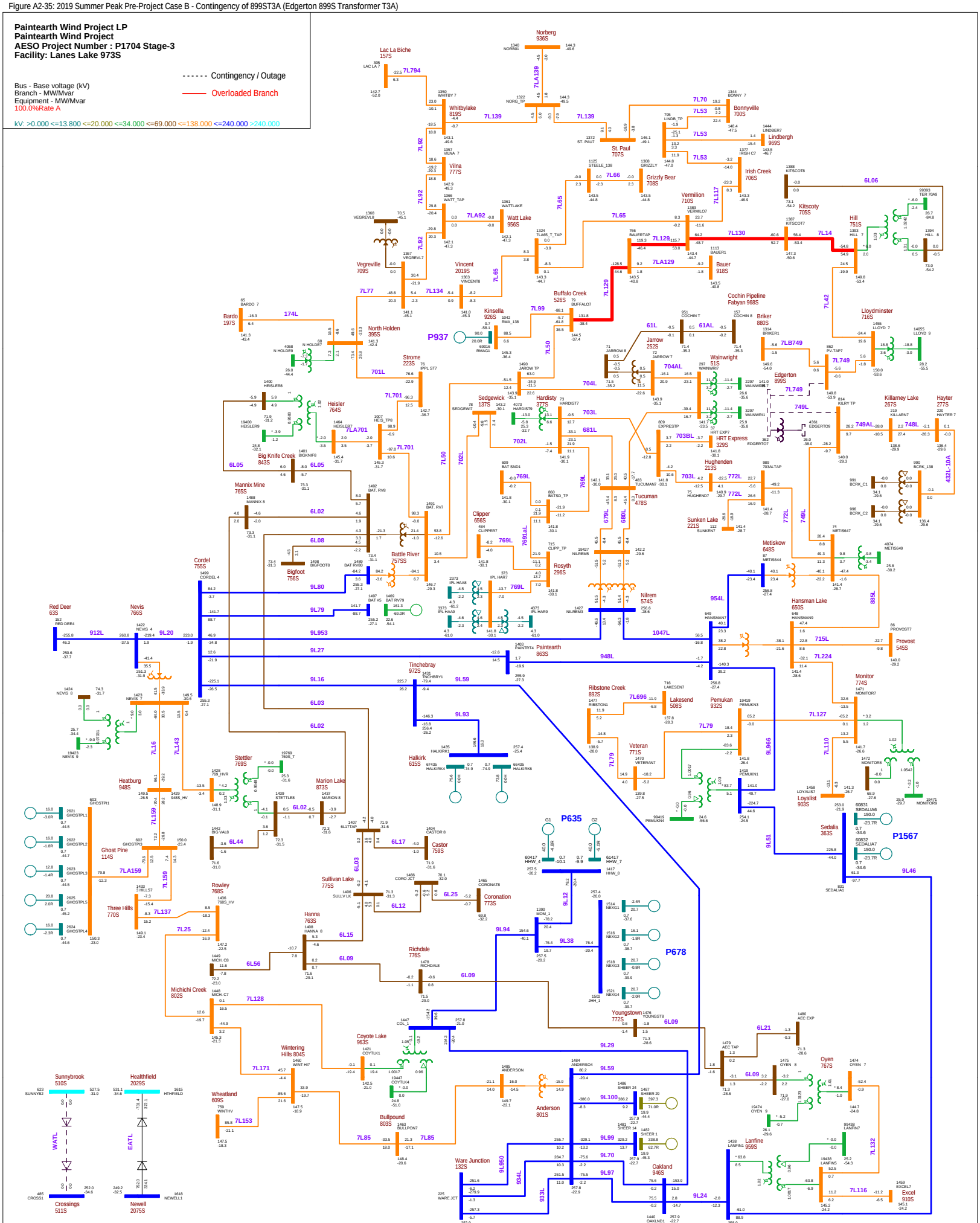
Paintearth Wind Project LP
Paintearth Wind Project
AESO Project Number : P1704 Stage-3
Facility: Lanes Lake 973S
Contingency / Outage
Overloaded Branch
Bus - Base voltage (kV)
Branch - MW/Mvar
Equipment - MW/Mvar
100.0%Rate A
kV: >0.000 <=13.800 <=20.000 <=34.000 <=69.000 <=138.000 <=240.000 >240.000
Norberg 936S
Lac La Biche 157S
Whitbylake 819S
Vilna 777S
Watt Lake 956S
Vegreville 709S
Vincent 2019S
Kinsella 926S
Buffalo Creek 526S
St. Paul 707S
Vermilion 710S
Grizzly Bear 708S
Bonnyville 700S
Lindbergh 969S
Irish Creek 706S
Kitscoty 705S
Hill 751S
Bauer 918S
Cochin Pipeline
Fabyan 968S
Briker 880S
Lloydminster 716S
Bardo 197S
North Holden 395S
Strome 223S
Jarrow 252S
Wainwright 51S
Edgerton 899S
Heisler 764S
Sedgewick 137S
Hardisty 377S
HRT Express 329S
Killarney Lake 267S
Hayter 277S
Big Knife Creek 843S
Hughenden 213S
Mannix Mine 765S
Clipper 656S
Sunken Lake 221S
Tucuman 478S
Metiskow 648S
Hansman Lake 650S
Provost 545S
Cordel 755S
Battle River 757SS
Rosyth 296S
Nilrem 574S
Red Deer 63S
Nevis 766S
Bigfoot 756S
Paintearth 863S
Tinchebray 972S
Ribstone Creek 892S
Lakesend 508S
Pemukan 932S
Monitor 774S
Veteran 771S
Loyalist 903S
Sedalia 363S
Halkirk 615S
Stettler 769S
Heatburg 948S
Marion Lake 873S
Ghost Pine 114S
Three Hills 770S
Rowley 768S
Sullivan Lake 775S
Castor 759S
Coronation 773S
Hanna 763S
Richdale 776S
Michichi Creek 802S
Youngstown 772S
Oyen 767S
Lanfine 959S
Excel 910S
Sunnybrook 510S
Healthfield 2029S
Crossings 511S
Newell 2075S
Wheatland 609S
Wintering Hills 804S
Coyote Lake 963S
Bullpound 803S
Anderson 801S
Ware Junction 132S
Oakland 946S
Yongstown 772S
P937
P635
P678
P1567
174L
7L794
7L139
7L92
7L93
7L92A
7L65
7L66
7L70
7L53
7L117
7L129
7L130
7L14
6L06
7L77
7L134
7L65
7L99
7L50
7L129
7LA129
7L42
61L
61AL
704AL
704L
7LB749
7L749
749L
749AL
748L
432L-10A
701L
7L701
7LA701
6L05
6L02
6L08
6L03
9L80
9L79
9L953
9L27
9L16
9L59
9L93
912L
9L20
7L16
7L143
7L159
7LA159
7L169
6L44
6L17
6L02
6L03
6L12
6L25
6L15
6L09
6L56
7L25
7L128
7L137
7L153
7L171
7L85
9L94
9L38
9L12
9L29
9L59
9L100
9L99
9L70
9L97
9L24
9L950
934L
933L
7LA139
7LA92
7L139
7L701
7L702
7L703
681L
702L
769L
7691aL
703L
703BL
703AL
772L
679L
680L
954L
1047L
948L
715L
7L224
885L
9L966
7L127
7L110
9L51
7L79
7L696
7L132
7L116
6L21
6L09
9L46
Vegrenl8
Vegrenl7
Watlake
Watt_Tap
Steele_138
Grizzly
Lindber7
Bauer1
Kitscot8
Kitscot7
Hill 7
Lloyd 7
Lloyd 9
Brikr1
Pv-tap7
Cochin T
Cochin 8
Jarrow 9
Jarrow 7
Wainwr7
Wainwr1
Wainwr5
Edgert07
Edgert09
Heisler8
Heisler7
Heisler9
Bardo 7
N Holde7
Sedgewt
Hardist7
Hardist9
Jarow TP
Buffalo7
Rma_138
Vincent8
Watlak_T_TAP
Bauertap
Expresstp
Hrt Exp7
Hrt Exp9
Bat Snd1
Bat_Tap
Batsd_TP
Tucuman7
Hughend7
Sunken7
Clipper7
Clipp_TP
Bat Rv8
Bat_Rv7
Bat Rv9
Bat Rv79
Bat #5
Bat Rv81
Bat Rv83
Ipl Haa8
Ipl Haa9
Ipl Har7
Ipl Har9
Nilrem5
Nilrem3
Paintrt4
Mannix8
Bigfoot8
Red Dee4
Nevis 4
Nevis 7
Nevis 8
Nevis 9
Ghostp1
Ghostpl1
Ghostpl2
Ghostp3
Ghostpl3
Ghostp5
Ghostpl5
Ghostp4
Ghostpl4
Hills7
Hills9
Stettle8
Heatbur8
Big Val8
Marion 8
Hanna 8
Hanna 9
Castor 8
Coronat8
Sullylk
Mich. C8
Mich. C7
Winthy
Wint H7
Coyt Jct
Coytlk1
Coytlk4
Bullpnt7
Anderson
Anderso4
Sheer 14
Sheer 29
Sheer 1
Sheer 2
Ware Jct
Oakland1
Jhh_1
Hwy_4
Hwy_7
Hwy_8
Mom_1
Nexg1
Nexg2
Nexg3
Nexg4
Aec Exp
Aec Tap
Oyen 8
Oyen 9
Lanfin1
Lanfin5
Lanfin7
Excel7
Ribston1
Lakesen7
Pemukn3
Pemukn1
Pemukn4
Veteran7
Monitor7
Monitor8
Loylist7
Sedalia1
Hansman7
Hansman9
Provost7
Metis644
Metis647
Metis649
Bcrk_c1
Bcrk_c2
Bcrk_138
Tr Hdr
Tr Hdr 1
Tr Hdr 2
Tr Hdr 3
Tr Hdr 4
Tr Hdr 5
Tr Hdr 6
Tr Hdr 7
Tr Hdr 8
Tr Hdr 9
Tr Hdr 10
Tr Hdr 11
Tr Hdr 12
Tr Hdr 13
Tr Hdr 14
Tr Hdr 15
Tr Hdr 16
Tr Hdr 17
Tr Hdr 18
Tr Hdr 19
Tr Hdr 20
Tr Hdr 21
Tr Hdr 22
Tr Hdr 23
Tr Hdr 24
Tr Hdr 25
Tr Hdr 26
Tr Hdr 27
Tr Hdr 28
Tr Hdr 29
Tr Hdr 30
Tr Hdr 31
Tr Hdr 32
Tr Hdr 33
Tr Hdr 34
Tr Hdr 35
Tr Hdr 36
Tr Hdr 37
Tr Hdr 38
Tr Hdr 39
Tr Hdr 40
Tr Hdr 41
Tr Hdr 42
Tr Hdr 43
Tr Hdr 44
Tr Hdr 45
Tr Hdr 46
Tr Hdr 47
Tr Hdr 48
Tr Hdr 49
Tr Hdr 50
Tr Hdr 51
Tr Hdr 52
Tr Hdr 53
Tr Hdr 54
Tr Hdr 55
Tr Hdr 56
Tr Hdr 57
Tr Hdr 58
Tr Hdr 59
Tr Hdr 60
Tr Hdr 61
Tr Hdr 62
Tr Hdr 63
Tr Hdr 64
Tr Hdr 65
Tr Hdr 66
Tr Hdr 67
Tr Hdr 68
Tr Hdr 69
Tr Hdr 70
Tr Hdr 71
Tr Hdr 72
Tr Hdr 73
Tr Hdr 74
Tr Hdr 75
Tr Hdr 76
Tr Hdr 77
Tr Hdr 78
Tr Hdr 79
Tr Hdr 80
Tr Hdr 81
Tr Hdr 82
Tr Hdr 83
Tr Hdr 84
Tr Hdr 85
Tr Hdr 86
Tr Hdr 87
Tr Hdr 88
Tr Hdr 89
Tr Hdr 90
Tr Hdr 91
Tr Hdr 92
Tr Hdr 93
Tr Hdr 94
Tr Hdr 95
Tr Hdr 96
Tr Hdr 97
Tr Hdr 98
Tr Hdr 99
Tr Hdr 100
Tr Hdr 101
Tr Hdr 102
Tr Hdr 103
Tr Hdr 104
Tr Hdr 105
Tr Hdr 106
Tr Hdr 107
Tr Hdr 108
Tr Hdr 109
Tr Hdr 110
Tr Hdr 111
Tr Hdr 112
Tr Hdr 113
Tr Hdr 114
Tr Hdr 115
Tr Hdr 116
Tr Hdr 117
Tr Hdr 118
Tr Hdr 119
Tr Hdr 120
Tr Hdr 121
Tr Hdr 122
Tr Hdr 123
Tr Hdr 124
Tr Hdr 125
Tr Hdr 126
Tr Hdr 127
Tr Hdr 128
Tr Hdr 129
Tr Hdr 130
Tr Hdr 131
Tr Hdr 132
Tr Hdr 133
Tr Hdr 134
Tr Hdr 135
Tr Hdr 136
Tr Hdr 137
Tr Hdr 138
Tr Hdr 139
Tr Hdr 140
Tr Hdr 141
Tr Hdr 142
Tr Hdr 143
Tr Hdr 144
Tr Hdr 145
Tr Hdr 146
Tr Hdr 147
Tr Hdr 148
Tr Hdr 149
Tr Hdr 150
Tr Hdr 151
Tr Hdr 152
Tr Hdr 153
Tr Hdr 154
Tr Hdr 155
Tr Hdr 156
Tr Hdr 157
Tr Hdr 158
Tr Hdr 159
Tr Hdr 160
Tr Hdr 161
Tr Hdr 162
Tr Hdr 163
Tr Hdr 164
Tr Hdr 165
Tr Hdr 166
Tr Hdr 167
Tr Hdr 168
Tr Hdr 169
Tr Hdr 170
Tr Hdr 171
Tr Hdr 172
Tr Hdr 173
Tr Hdr 174
Tr Hdr 175
Tr Hdr 176
Tr Hdr 177
Tr Hdr 178
Tr Hdr 179
Tr Hdr 180
Tr Hdr 181
Tr Hdr 182
Tr Hdr 183
Tr Hdr 184
Tr Hdr 185
Tr Hdr 186
Tr Hdr 187
Tr Hdr 188
Tr Hdr 189
Tr Hdr 190
Tr Hdr 191
Tr Hdr 192
Tr Hdr 193
Tr Hdr 194
Tr Hdr 195
Tr Hdr 196
Tr Hdr 197
Tr Hdr 198
Tr Hdr 199
Tr Hdr 200
Tr Hdr 201
Tr Hdr 202
Tr Hdr 203
Tr Hdr 204
Tr Hdr 205
Tr Hdr 206
Tr Hdr 207
Tr Hdr 208
Tr Hdr 209
Tr Hdr 210
Tr Hdr 211
Tr Hdr 212
Tr Hdr 213
Tr Hdr 214
Tr Hdr 215
Tr Hdr 216
Tr Hdr 217
Tr Hdr 218
Tr Hdr 219
Tr Hdr 220
Tr Hdr 221
Tr Hdr 222
Tr Hdr 223
Tr Hdr 224
Tr Hdr 225
Tr Hdr 226
Tr Hdr 227
Tr Hdr 228
Tr Hdr 229
Tr Hdr 230
Tr Hdr 231
Tr Hdr 232
Tr Hdr 233
Tr Hdr 234
Tr Hdr 235
Tr Hdr 236
Tr Hdr 237
Tr Hdr 238
Tr Hdr 239
Tr Hdr 240
Tr Hdr 241
Tr Hdr 242
Tr Hdr 243
Tr Hdr 244
Tr Hdr 245
Tr Hdr 246
Tr Hdr 247
Tr Hdr 248
Tr Hdr 249
Tr Hdr 250
Tr Hdr 251
Tr Hdr 252
Tr Hdr 253
Tr Hdr 254
Tr Hdr 255
Tr Hdr 256
Tr Hdr 257
Tr Hdr 258
Tr Hdr 259
Tr Hdr 260
Tr Hdr 261
Tr Hdr 262
Tr Hdr 263
Tr Hdr 264
Tr Hdr 265
Tr Hdr 266
Tr Hdr 267
Tr Hdr 268
Tr Hdr 269
Tr Hdr 270
Tr Hdr 271
Tr Hdr 272
Tr Hdr 273
Tr Hdr 274
Tr Hdr 275
Tr Hdr 276
Tr Hdr 277
Tr Hdr 278
Tr Hdr 279
Tr Hdr 280
Tr Hdr 281
Tr Hdr 282
Tr Hdr 283
Tr Hdr 284
Tr Hdr 285
Tr Hdr 286
Tr Hdr 287
Tr Hdr 288
Tr Hdr 289
Tr Hdr 290
Tr Hdr 291
Tr Hdr 292
Tr Hdr 293
Tr Hdr 294
Tr Hdr 295
Tr Hdr 296
Tr Hdr 297
Tr Hdr 298
Tr Hdr 299
Tr Hdr 300
Tr Hdr 301
Tr Hdr 302
Tr Hdr 303
Tr Hdr 304
Tr Hdr 305
Tr Hdr 306
Tr Hdr 307
Tr Hdr 308
Tr Hdr 309
Tr Hdr 310
Tr Hdr 311
Tr Hdr 312
Tr Hdr 313
Tr Hdr 314
Tr Hdr 315
Tr Hdr 316
Tr Hdr 317
Tr Hdr 318
Tr Hdr 319
Tr Hdr 320
Tr Hdr 321
Tr Hdr 322
Tr Hdr 323
Tr Hdr 324
Tr Hdr 325
Tr Hdr 326
Tr Hdr 327
Tr Hdr 328
Tr Hdr 329
Tr Hdr 330
Tr Hdr 331
Tr Hdr 332
Tr Hdr 333
Tr Hdr 334
Tr Hdr 335
Tr Hdr 336
Tr Hdr 337
Tr Hdr 338
Tr Hdr 339
Tr Hdr 340
Tr Hdr 341
Tr Hdr 342
Tr Hdr 343
Tr Hdr 344
Tr Hdr 345
Tr Hdr 346
Tr Hdr 347
Tr Hdr 348
Tr Hdr 349
Tr Hdr 350
Tr Hdr 351
Tr Hdr 352
Tr Hdr 353
Tr Hdr 354
Tr Hdr 355
Tr Hdr 356
Tr Hdr 357
Tr Hdr 358
Tr Hdr 359
Tr Hdr 360
Tr Hdr 361
Tr Hdr 362
Tr Hdr 363
Tr Hdr 364
Tr Hdr 365
Tr Hdr 366
Tr Hdr 367
Tr Hdr 368
Tr Hdr 369
Tr Hdr 370
Tr Hdr 371
Tr Hdr 372
Tr Hdr 373
Tr Hdr 374
Tr Hdr 375
Tr Hdr 376
Tr Hdr 377
Tr Hdr 378
Tr Hdr 379
Tr Hdr 380
Tr Hdr 381
Tr Hdr 382
Tr Hdr 383
Tr Hdr 384
Tr Hdr 385
Tr Hdr 386
Tr Hdr 387
Tr Hdr 388
Tr Hdr 389
Tr Hdr 390
Tr Hdr 391
Tr Hdr 392
Tr Hdr 393
Tr Hdr 394
Tr Hdr 395
Tr Hdr 396
Tr Hdr 397
Tr Hdr 398
Tr Hdr 399
Tr Hdr 400
Tr Hdr 401
Tr Hdr 402
Tr Hdr 403
Tr Hdr 404
Tr Hdr 405
Tr Hdr 406
Tr Hdr 407
Tr Hdr 408
Tr Hdr 409
Tr Hdr 410
Tr Hdr 411
Tr Hdr 412
Tr Hdr 413
Tr Hdr 414
Tr Hdr 415
Tr Hdr 416
Tr Hdr 417
Tr Hdr 418
Tr Hdr 419
Tr Hdr 420
Tr Hdr 421
Tr Hdr 422
Tr Hdr 423
Tr Hdr 424
Tr Hdr 425
Tr Hdr 426
Tr Hdr 427
Tr Hdr 428
Tr Hdr 429
Tr Hdr 430
Tr Hdr 431
Tr Hdr 432
Tr Hdr 433
Tr Hdr 434
Tr Hdr 435
Tr Hdr 436
Tr Hdr 437
Tr Hdr 438
Tr Hdr 439
Tr Hdr 440
Tr Hdr 441
Tr Hdr 442
Tr Hdr 443
Tr Hdr 444
Tr Hdr 445
Tr Hdr 446
Tr Hdr 447
Tr Hdr 448
Tr Hdr 449
Tr Hdr 450
Tr Hdr 451
Tr Hdr 452
Tr Hdr 453
Tr Hdr 454
Tr Hdr 455
Tr Hdr 456
Tr Hdr 457
Tr Hdr 458
Tr Hdr 459
Tr Hdr 460
Tr Hdr 461
Tr Hdr 462
Tr Hdr 463
Tr Hdr 464
Tr Hdr 465
Tr Hdr 466
Tr Hdr 467
Tr Hdr 468
Tr Hdr 469
Tr Hdr 470
Tr Hdr 471
Tr Hdr 472
Tr Hdr 473
Tr Hdr 474
Tr Hdr 475
Tr Hdr 476
Tr Hdr 477
Tr Hdr 478
Tr Hdr 479
Tr Hdr 480
Tr Hdr 481
Tr Hdr 482
Tr Hdr 483
Tr Hdr 484
Tr Hdr 485
Tr Hdr 486
Tr Hdr 487
Tr Hdr 488
Tr Hdr 489
Tr Hdr 490
Tr Hdr 491
Tr Hdr 492
Tr Hdr 493
Tr Hdr 494
Tr Hdr 495
Tr Hdr 496
Tr Hdr 497
Tr Hdr 498
Tr Hdr 499
Tr Hdr 500
Tr Hdr 501
Tr Hdr 502
Tr Hdr 503
Tr Hdr 504
Tr Hdr 505
Tr Hdr 506
Tr Hdr 507
Tr Hdr 508
Tr Hdr 509
Tr Hdr 510
Tr Hdr 511
Tr Hdr 512
Tr Hdr 513
Tr Hdr 514
Tr Hdr 515
Tr Hdr 516
Tr Hdr 517
Tr Hdr 518
Tr Hdr 519
Tr Hdr 520
Tr Hdr 521
Tr Hdr 522
Tr Hdr 523
Tr Hdr 524
Tr Hdr 525
Tr Hdr 526
Tr Hdr 527
Tr Hdr 528
Tr Hdr 529
Tr Hdr 530
Tr Hdr 531
Tr Hdr 532
Tr Hdr 533
Tr Hdr 534
Tr Hdr 535
Tr Hdr 536
Tr Hdr 537
Tr Hdr 538
Tr Hdr 539
Tr Hdr 540
Tr Hdr 541
Tr Hdr 542
Tr Hdr 543
Tr Hdr 544
Tr Hdr 545
Tr Hdr 546
Tr Hdr 547
Tr Hdr 548
Tr Hdr 549
Tr Hdr 550
Tr Hdr 551
Tr Hdr 552
Tr Hdr 553
Tr Hdr 554
Tr Hdr 555
Tr Hdr 556
Tr Hdr 557
Tr Hdr 558
Tr Hdr 559
Tr Hdr 560
Tr Hdr 561
Tr Hdr 562
Tr Hdr 563
Tr Hdr 564
Tr Hdr 565
Tr Hdr 566
Tr Hdr 567
Tr Hdr 568
Tr Hdr 569
Tr Hdr 570
Tr Hdr 571
Tr Hdr 572
Tr Hdr 573
Tr Hdr 574
Tr Hdr 575
Tr Hdr 576
Tr Hdr 577
Tr Hdr 578
Tr Hdr 579
Tr Hdr 580
Tr Hdr 581
Tr Hdr 582
Tr Hdr 583
Tr Hdr 584
Tr Hdr 585
Tr Hdr 586
Tr Hdr 587
Tr Hdr 588
Tr Hdr 589
Tr Hdr 590
Tr Hdr 591
Tr Hdr 592
Tr Hdr 593
Tr Hdr 594
Tr Hdr 595
Tr Hdr 596
Tr Hdr 597
Tr Hdr 598
Tr Hdr 599
Tr Hdr 600
Tr Hdr 601
Tr Hdr 602
Tr Hdr 603
Tr Hdr 604
Tr Hdr 605
Tr Hdr 606
Tr Hdr 607
Tr Hdr 608
Tr Hdr 609
Tr Hdr 610
Tr Hdr 611
Tr Hdr 612
Tr Hdr 613
Tr Hdr 614
Tr Hdr 615
Tr Hdr 616
Tr Hdr 617
Tr Hdr 618
Tr Hdr 619
Tr Hdr 620
Tr Hdr 621
Tr Hdr 622
Tr Hdr 623
Tr Hdr 624
Tr Hdr 625
Tr Hdr 626
Tr Hdr 627
Tr Hdr 628
Tr Hdr 629
Tr Hdr 630
Tr Hdr 631
Tr Hdr 632
Tr Hdr 633
Tr Hdr 634
Tr Hdr 635
Tr Hdr 636
Tr Hdr 637
Tr Hdr 638
Tr Hdr 639
Tr Hdr 640
Tr Hdr 641
Tr Hdr 642
Tr Hdr 643
Tr Hdr 644
Tr Hdr 645
Tr Hdr 646
Tr Hdr 647
Tr Hdr 648
Tr Hdr 649
Tr Hdr 650
Tr Hdr 651
Tr Hdr 652
Tr Hdr 653
Tr Hdr 654
Tr Hdr 655
Tr Hdr 656
Tr Hdr 657
Tr Hdr 658
Tr Hdr 659
Tr Hdr 660
Tr Hdr 661
Tr Hdr 662
Tr Hdr 663
Tr Hdr 664
Tr Hdr 665
Tr Hdr 666
Tr Hdr 667
Tr Hdr 668
Tr Hdr 669
Tr Hdr 670
Tr Hdr 671
Tr Hdr 672
Tr Hdr 673
Tr Hdr 674
Tr Hdr 675
Tr Hdr 676
Tr Hdr 677
Tr Hdr 678
Tr Hdr 679
Tr Hdr 680
Tr Hdr 681
Tr Hdr 682
Tr Hdr 683
Tr Hdr 684
Tr Hdr 685
Tr Hdr 686
Tr Hdr 687
Tr Hdr 688
Tr Hdr 689
Tr Hdr 690
Tr Hdr 691
Tr Hdr 692
Tr Hdr 693
Tr Hdr 694
Tr Hdr 695
Tr Hdr 696
Tr Hdr 697
Tr Hdr 698
Tr Hdr 699
Tr Hdr 700
Tr Hdr 701
Tr Hdr 702
Tr Hdr 703
Tr Hdr 704
Tr Hdr 705
Tr Hdr 706
Tr Hdr 707
Tr Hdr 708
Tr Hdr 709
Tr Hdr 710
Tr Hdr 711
Tr Hdr 712
Tr Hdr 713
Tr Hdr 714
Tr Hdr 715
Tr Hdr 716
Tr Hdr 717
Tr Hdr 718
Tr Hdr 719
Tr Hdr 720
Tr Hdr 721
Tr Hdr 722
Tr Hdr 723
Tr Hdr 724
Tr Hdr 725
Tr Hdr 726
Tr Hdr 727
Tr Hdr 728
Tr Hdr 729
Tr Hdr 730
Tr Hdr 731
Tr Hdr 732
Tr Hdr 733
Tr Hdr 734
Tr Hdr 735
Tr Hdr 736
Tr Hdr 737
Tr Hdr 738
Tr Hdr 739
Tr Hdr 740
Tr Hdr 741
Tr Hdr 742
Tr Hdr 743
Tr Hdr 744
Tr Hdr 745
Tr Hdr 746
Tr Hdr 747
Tr Hdr 748
Tr Hdr 749
Tr Hdr 750
Tr Hdr 751
Tr Hdr 752
Tr Hdr 753
Tr Hdr 754
Tr Hdr 755
Tr Hdr 756
Tr Hdr 757
Tr Hdr 758
Tr Hdr 759
Tr Hdr 760
Tr Hdr 761
Tr Hdr 762
Tr Hdr 763
Tr Hdr 764
Tr Hdr 765
Tr Hdr 766
Tr Hdr 767
Tr Hdr 768
Tr Hdr 769
Tr Hdr 770
Tr Hdr 771
Tr Hdr 772
Tr Hdr 773
Tr Hdr 774
Tr Hdr 775
Tr Hdr 776
Tr Hdr 777
Tr Hdr 778
Tr Hdr 779
Tr Hdr 780
Tr Hdr 781
Tr Hdr 782
Tr Hdr 783
Tr Hdr 784
Tr Hdr 785
Tr Hdr 786
Tr Hdr 787
Tr Hdr 788
Tr Hdr 789
Tr Hdr 790
Tr Hdr 791
Tr Hdr 792
Tr Hdr 793
Tr Hdr 794
Tr Hdr 795
Tr Hdr 796
Tr Hdr 797
Tr Hdr 798
Tr Hdr 799
Tr Hdr 800
Tr Hdr 801
Tr Hdr 802
Tr Hdr 803
Tr Hdr 804
Tr Hdr 805
Tr Hdr 806
Tr Hdr 807
Tr Hdr 808
Tr Hdr 809
Tr Hdr 810
Tr Hdr 811
Tr Hdr 812
Tr Hdr 813
Tr Hdr 814
Tr Hdr 815
Tr Hdr 816
Tr Hdr 817
Tr Hdr 818
Tr Hdr 819
Tr Hdr 820
Tr Hdr 821
Tr Hdr 822
Tr Hdr 823
Tr Hdr 824
Tr Hdr 825
Tr Hdr 826
Tr Hdr 827
Tr Hdr 828
Tr Hdr 829
Tr Hdr 830
Tr Hdr 831
Tr Hdr 832
Tr Hdr 833
Tr Hdr 834
Tr Hdr 835
Tr Hdr 836
Tr Hdr 837
Tr Hdr 838
Tr Hdr 839
Tr Hdr 840
Tr Hdr 841
Tr Hdr 842
Tr Hdr 843
Tr Hdr 844
Tr Hdr 845
Tr Hdr 846
Tr Hdr 847
Tr Hdr 848
Tr Hdr 849
Tr Hdr 850
Tr Hdr 851
Tr Hdr 852
Tr Hdr 853
Tr Hdr 854
Tr Hdr 855
Tr Hdr 856
Tr Hdr 857
Tr Hdr 858
Tr Hdr 859
Tr Hdr 860
Tr Hdr 861
Tr Hdr 862
Tr Hdr 863
Tr Hdr 864
Tr Hdr 865
Tr Hdr 866
Tr Hdr 867
Tr Hdr 868
Tr Hdr 869
Tr Hdr 870
Tr Hdr 871
Tr Hdr 872
Tr Hdr 873
Tr Hdr 874
Tr Hdr 875
Tr Hdr 876
Tr Hdr 877
Tr Hdr 878
Tr Hdr 879
Tr Hdr 880
Tr Hdr 881
Tr Hdr 882
Tr Hdr 883
Tr Hdr 884
Tr Hdr 885
Tr Hdr 886
Tr Hdr 887
Tr Hdr 888
Tr Hdr 889
Tr Hdr 890
Tr Hdr 891
Tr Hdr 892
Tr Hdr 893
Tr Hdr 894
Tr Hdr 895
Tr Hdr 896
Tr Hdr 897
Tr Hdr 898
Tr Hdr 899
Tr Hdr 900
Tr Hdr 901
Tr Hdr 902
Tr Hdr 903
Tr Hdr 904
Tr Hdr 905
Tr Hdr 906
Tr Hdr 907
Tr Hdr 908
Tr Hdr 909
Tr Hdr 910
Tr Hdr 911
Tr Hdr 912
Tr Hdr 913
Tr Hdr 914
Tr Hdr 915
Tr Hdr 916
Tr Hdr 917
Tr Hdr 918
Tr Hdr 919
Tr Hdr 920
Tr Hdr 921
Tr Hdr 922
Tr Hdr 923
Tr Hdr 924
Tr Hdr 925
Tr Hdr 926
Tr Hdr 927
Tr Hdr 928
Tr Hdr 929
Tr Hdr 930
Tr Hdr 931
Tr Hdr 932
Tr Hdr 933
Tr Hdr 934
Tr Hdr 935
Tr Hdr 936
Tr Hdr 937
Tr Hdr 938
Tr Hdr 939
Tr Hdr 940
Tr Hdr 941
Tr Hdr 942
Tr Hdr 943
Tr Hdr 944
Tr Hdr 945
Tr Hdr 946
Tr Hdr 947
Tr Hdr 948
Tr Hdr 949
Tr Hdr 950
Tr Hdr 951
Tr Hdr 952
Tr Hdr 953
Tr Hdr 954
Tr Hdr 955
Tr Hdr 956
Tr Hdr 957
Tr Hdr 958
Tr Hdr 959
Tr Hdr 960
Tr Hdr 961
Tr Hdr 962
Tr Hdr 963
Tr Hdr 964
Tr Hdr 965
Tr Hdr 966
Tr Hdr 967
Tr Hdr 968
Tr Hdr 969
Tr Hdr 970
Tr Hdr 971
Tr Hdr 972
Tr Hdr 973
Tr Hdr 974
Tr Hdr 975
Tr Hdr 976
Tr Hdr 977
Tr Hdr 978
Tr Hdr 979
Tr Hdr 980
Tr Hdr 981
Tr Hdr 982
Tr Hdr 983
Tr Hdr 984
Tr Hdr 985
Tr Hdr 986
Tr Hdr 987
Tr Hdr 988
Tr Hdr 989
Tr Hdr 990
Tr Hdr 991
Tr Hdr 992
Tr Hdr 993
Tr Hdr 994
Tr Hdr 995
Tr Hdr 996
Tr Hdr 997
Tr Hdr 998
Tr Hdr 999
Tr Hdr 1000
Tr Hdr 1001
Tr Hdr 1002
Tr Hdr 1003
Tr Hdr 1004
Tr Hdr 1005
Tr Hdr 1006
Tr Hdr 1007
Tr Hdr 1008
Tr Hdr 1009
Tr Hdr 1010
Tr Hdr 1011
Tr Hdr 1012
Tr Hdr 1013
Tr Hdr 1014
Tr Hdr 1015
Tr Hdr 1016
Tr Hdr 1017
Tr Hdr 1018
Tr Hdr 1019
Tr Hdr 1020
Tr Hdr 1021
Tr Hdr 1022
Tr Hdr 1023
Tr Hdr 1024
Tr Hdr 1025
Tr Hdr 1026
Tr Hdr 1027
Tr Hdr 1028
Tr Hdr 1029
Tr Hdr 1030
Tr Hdr 1031
Tr Hdr 1032
Tr Hdr 1033
Tr Hdr 1034
Tr Hdr 1035
Tr Hdr 1036
Tr Hdr 1037
Tr Hdr 1038
Tr Hdr 1039
Tr Hdr 1040
Tr Hdr 1041
Tr Hdr 1042
Tr Hdr 1043
Tr Hdr 1044
Tr Hdr 1045
Tr Hdr 1046
Tr Hdr 1047
Tr Hdr 1048
Tr Hdr 1049
Tr Hdr 1050
Tr Hdr 1051
Tr Hdr 1052
Tr Hdr 1053
Tr Hdr 1054
Tr Hdr 1055
Tr Hdr 1056
Tr Hdr 1057
Tr Hdr 1058
Tr Hdr 1059
Tr Hdr 1060
Tr Hdr 1061
Tr Hdr 1062
Tr Hdr 1063
Tr Hdr 1064
Tr Hdr 1065
Tr Hdr 1066
Tr Hdr 1067
Tr Hdr 1068
Tr Hdr 1069
Tr Hdr 1070
Tr Hdr 1071
Tr Hdr 1072
Tr Hdr 1073
Tr Hdr 1074
Tr Hdr 1075
Tr Hdr 1076
Tr Hdr 1077
Tr Hdr 1078
Tr Hdr 1079
Tr Hdr 1080
Tr Hdr 1081
Tr Hdr 1082
Tr Hdr 1083
Tr Hdr 1084
Tr Hdr 1085
Tr Hdr 1086
Tr Hdr 1087
Tr Hdr 1088
Tr Hdr 1089
Tr Hdr 1090
Tr Hdr 1091
Tr Hdr 1092
Tr Hdr 1093
Tr Hdr 1094
Tr Hdr 1095
Tr Hdr 1096
Tr Hdr 1097
Tr Hdr 1098
Tr Hdr 1099
Tr Hdr 1100
Tr Hdr 1101
Tr Hdr 1102
Tr Hdr 1103
Tr Hdr 1104
Tr Hdr 1105
Tr Hdr 1106
Tr Hdr 1107
Tr Hdr 1108
Tr Hdr 1109
Tr Hdr 1110
Tr Hdr 1111
Tr Hdr 1112
Tr Hdr 1113
Tr Hdr 1114
Tr Hdr 1115
Tr Hdr 1116
Tr Hdr 1117
Tr Hdr 1118
Tr Hdr 1119
Tr Hdr 1120
Tr Hdr 1121
Tr Hdr 1122
Tr Hdr 1123
Tr Hdr 1124
Tr Hdr 1125
Tr Hdr 1126
Tr Hdr 1127
Tr Hdr 1128
Tr Hdr 1129
Tr Hdr 1130
Tr Hdr 1131
Tr Hdr 1132
Tr Hdr 1133
Tr Hdr 1134
Tr Hdr 1135
Tr Hdr 1136
Tr Hdr 1137
Tr Hdr 1138
Tr Hdr 1139
Tr Hdr 1140
Tr Hdr 1141
Tr Hdr 1142
Tr Hdr 1143
Tr Hdr 1144
Tr Hdr 1145
Tr Hdr 1146
Tr Hdr 1147
Tr Hdr 1148
Tr Hdr 1149
Tr Hdr 1150
Tr Hdr 1151
Tr Hdr 1152
Tr Hdr 1153
Tr Hdr 1154
Tr Hdr 1155
Tr Hdr 1156
Tr Hdr 1157
Tr Hdr 1158
Tr Hdr 1159
Tr Hdr 1160
Tr Hdr 1161
Tr Hdr 1162
Tr Hdr 1163
Tr Hdr 1164
Tr Hdr 1165
Tr Hdr 1166
Tr Hdr 1167
Tr Hdr 1168
Tr Hdr 1169
Tr Hdr 1170
Tr Hdr 1171
Tr Hdr 1172
Tr Hdr 1173
Tr Hdr 1174
Tr Hdr 1175
Tr Hdr 1176
Tr Hdr 1177
Tr Hdr 1178
Tr Hdr 1179
Tr Hdr 1180
Tr Hdr 1181
Tr Hdr 1182
Tr Hdr 1183
Tr Hdr 1184
Tr Hdr 1185
Tr Hdr 1186
Tr Hdr 1187
Tr Hdr 1188
Tr Hdr 1189
Tr Hdr 1190
Tr Hdr 1191
Tr Hdr 1192
Tr Hdr 1193
Tr Hdr 1194
Tr Hdr 1195
Tr Hdr 1196
Tr Hdr 1197
Tr Hdr 1198
Tr Hdr 1199
Tr Hdr 1200
Tr Hdr 1201
Tr Hdr 1202
Tr Hdr 1203
Tr Hdr 1204
Tr Hdr 1205
Tr Hdr 1206
Tr Hdr 1207
Tr Hdr 1208
Tr Hdr 1209
Tr Hdr 1210
Tr Hdr 1211
Tr Hdr 1212
Tr Hdr 1213
Tr Hdr 1214
Tr Hdr 1215
Tr Hdr 1216
Tr Hdr 1217
Tr Hdr 1218
Tr Hdr 1219
Tr Hdr 1220
Tr Hdr 1221
Tr Hdr 1222
Tr Hdr 1223
Tr Hdr 1224
Tr Hdr 1225
Tr Hdr 1226
Tr Hdr 1227
Tr Hdr 1228
Tr Hdr 1229
Tr Hdr 1230
Tr Hdr 1231
Tr Hdr 1232
Tr Hdr 1233
Tr Hdr 1234
Tr Hdr 1235
Tr Hdr 1236
Tr Hdr 1237
Tr Hdr 1238
Tr Hdr 1239
Tr Hdr 1240
Tr Hdr 1241
Tr Hdr 1242
Tr Hdr 1243
Tr Hdr 1244
Tr Hdr 1245
Tr Hdr 1246
Tr Hdr 1247
Tr Hdr 1248
Tr Hdr 1249
Tr Hdr 1250
Tr Hdr 1251
Tr Hdr 1252
Tr Hdr 1253
Tr Hdr 1254
Tr Hdr 1255
Tr Hdr 1256
Tr Hdr 1257
Tr Hdr 1258
Tr Hdr 1259
Tr Hdr 1260
Tr Hdr 1261
Tr Hdr 1262
Tr Hdr 1263
Tr Hdr 1264
Tr Hdr 1265
Tr Hdr 1266
Tr Hdr 1267
Tr Hdr 1268
Tr Hdr 1269
Tr Hdr 1270
Tr Hdr 1271
Tr Hdr 1272
Tr Hdr 1273
Tr Hdr 1274
Tr Hdr 1275
Tr Hdr 1276
Tr Hdr 1277
Tr Hdr 1278
Tr Hdr 1279
Tr Hdr 1280
Tr Hdr 1281
Tr Hdr 1282
Tr Hdr 1283
Tr Hdr 1284
Tr Hdr 1285
Tr Hdr 1286
Tr Hdr 1287
Tr Hdr 1288
Tr Hdr 1289
Tr Hdr 1290
Tr Hdr 1291
Tr Hdr 1292
Tr Hdr 1293
Tr Hdr 1294
Tr Hdr 1295
Tr Hdr 1296
Tr Hdr 1297
Tr Hdr 1298
Tr Hdr 1299
Tr Hdr 1300
Tr Hdr 1301
Tr Hdr 1302
Tr Hdr 1303
Tr Hdr 1304
Tr Hdr 1305
Tr Hdr 1306
Tr Hdr 1307
Tr Hdr 1308
Tr Hdr 1309
Tr Hdr 1310
Tr Hdr 1311
Tr Hdr 1312
Tr Hdr 1313
Tr Hdr 1314
Tr Hdr

Figure A2-36: 2019 Summer Peak Pre-Project Case B - Contingency of EATL (Newell 2075S - Heathfield 2029S)

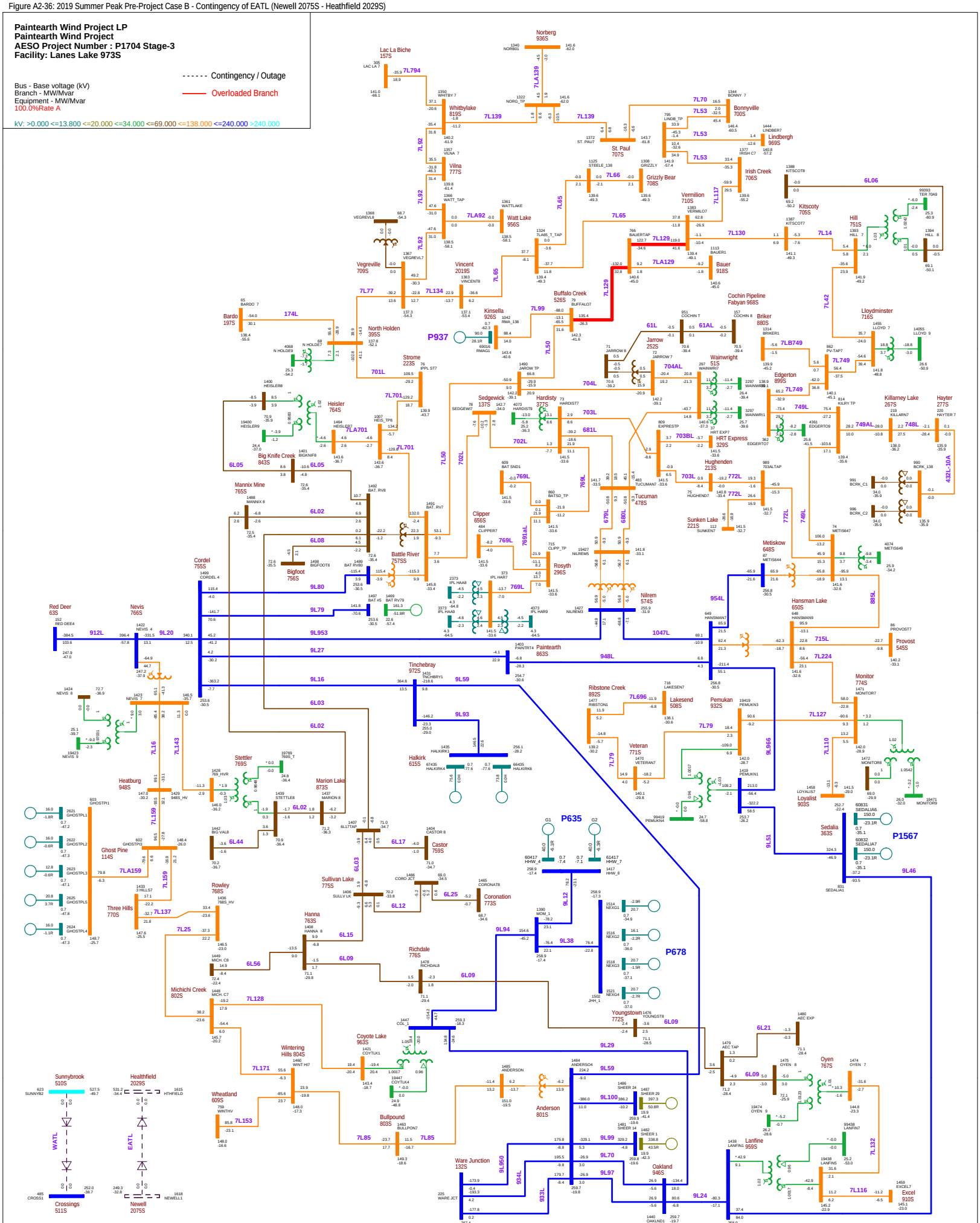
Paintearth Wind Project LP
Paintearth Wind Project
AESO Project Number : P1704 Stage-3
Facility: Lanes Lake 973S
Contingency / Outage
Overloaded Branch
Bus - Base voltage (kV)
Branch - MW/Mvar
Equipment - MW/Mvar
100.0%Rate A
kV: >0.000 <=13.800 <=20.000 <=34.000 <=69.000 <=138.000 <=240.000 >240.000
Norberg 936S
Lac La Biche 157S
Whitbylake 819S
Vilna 777S
Vegreville 709S
Vincent 2019S
Watt Lake 956S
St. Paul 707S
Bonnyville 700S
Lindbergh 969S
Irish Creek 706S
Kitscoty 705S
Hill 751S
Grizzly Bear 708S
Vermilion 710S
Bauer 918S
Buffalo Creek 526S
Kinsella 926S
Cochin Pipeline Fabyan 968S
Briker 880S
Lloydminster 716S
Bardo 197S
North Holden 395S
Strome 223S
Jarrow 252S
Wainwright 51S
Edgerton 899S
Killarney Lake 267S
Hayter 277S
Heisler 764S
Big Knife Creek 843S
Sedgewick 137S
Hardisty 377S
HRT Express 329S
Hughenden 213S
Tucuman 478S
Sunken Lake 221S
Mannix Mine 765S
Cordel 755S
Battle River 757SS
Clipper 656S
Rosyth 296S
Nilrem 574S
Metiskow 648S
Hansman Lake 650S
Provost 545S
Red Deer 63S
Nevis 766S
Bigfoot 756S
Paintearth 863S
Tinchebray 972S
Ribstone Creek 892S
Lakesend 508S
Pemukan 932S
Veteran 771S
Monitor 774S
Loyalist 903S
Sedalia 363S
Heatburg 948S
Stettler 769S
Marion Lake 873S
Halkirk 615S
Castor 759S
Ghost Pine 114S
Three Hills 770S
Rowley 768S
Sullivan Lake 775S
Coronation 773S
Hanna 763S
Richdale 776S
Youngstown 772S
Michichi Creek 802S
Wintering Hills 804S
Coyote Lake 963S
Wheatland 609S
Bullpound 803S
Anderson 801S
Ware Junction 132S
Oakland 946S
Lanfine 959S
Oyen 767S
Excel 910S
Sunnybrook 510S
Crossings 511S
Healthfield 2029S
Newell 2075S
WATL
EATL
P937
P635
P678
P1567
174L
701L
6L05
6L02
6L08
9L80
9L79
9L953
9L27
9L16
6L03
9L59
9L93
6L17
6L44
6L25
6L12
6L15
6L09
9L94
9L38
9L12
6L56
7L25
7L128
7L171
7L153
7L85
9L29
9L59
9L100
9L99
9L70
9L97
9L24
9L950
934L
933L
6L21
7L132
7L116
7L14
6L06
7L42
7L749
749L
748L
749AL
432L-10A
7L130
7L129
7L65
7L66
7L92
7L93
7L77
7L134
7L99
7L50
7L701
7LA701
7LA92
7LA139
7LA129
7L139
7L70
7L53
7L117
7L65
7L129
7L130
7L14
7L42
7L749
7LB749
61L
61AL
704AL
704L
703L
681L
702L
703BL
703L
772L
772AL
769L
769AL
679L
680L
954L
885L
1047L
948L
715L
7L224
7L127
7L110
9L966
9L51
7L79
7L696
7L16
7L143
7L159
7LA159
7L137
6L02
6L03
6L17
6L25
6L12
6L15
6L09
6L56
7L128
7L171
7L153
7L85
9L29
9L59
9L100
9L99
9L70
9L97
9L24
9L950
934L
933L
6L21
7L132
7L116
9L46
9L51
9L94
9L38
9L12

Figure A2-37: 2019 Summer Peak Pre-Project Case B - Contingency of 9L20 (Nevis 766S - Cordel 755S)

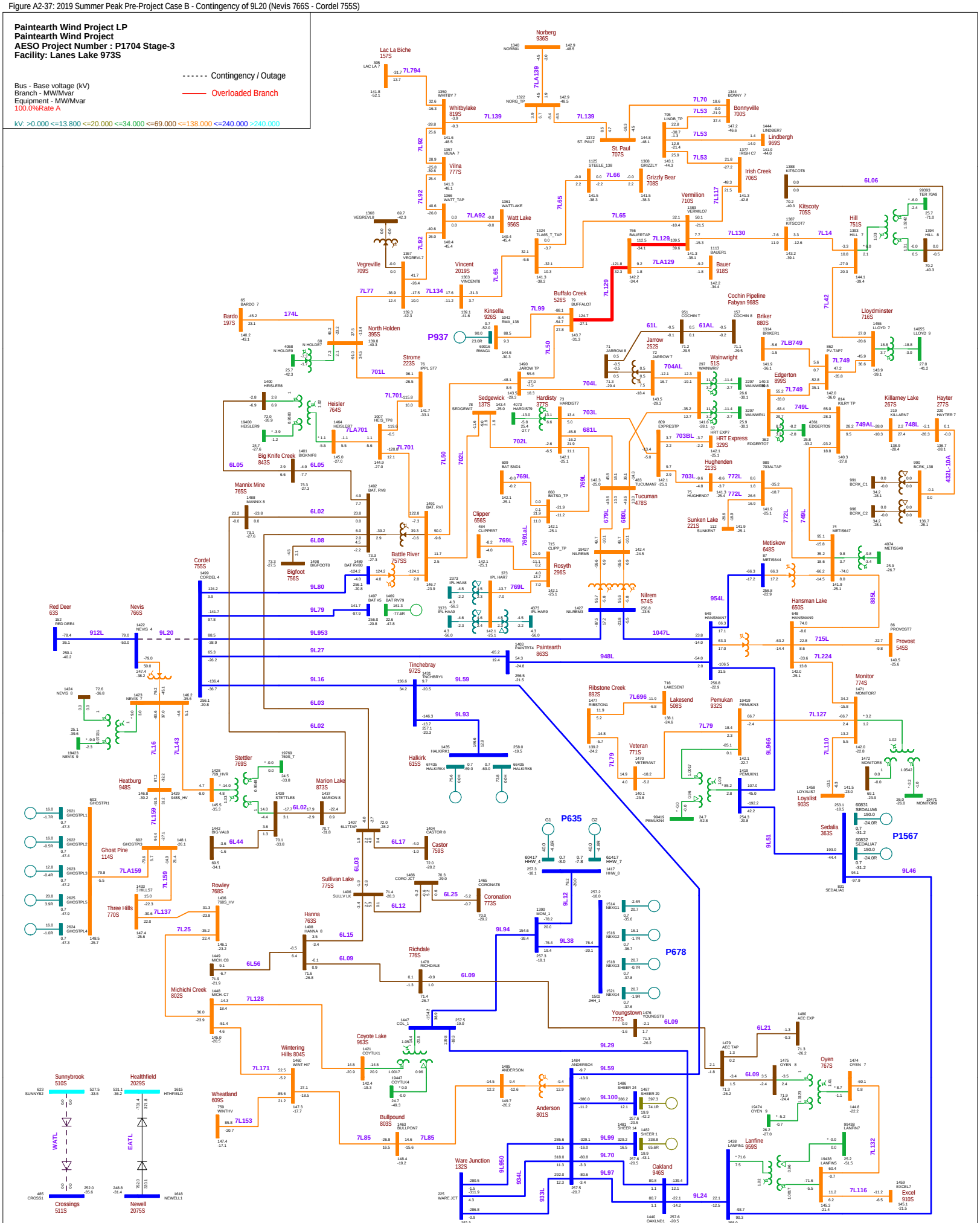

Figure A2-38: 2019 Summer Peak Pre-Project Case B - Contingency of 9L29 (Oakland 946S - Coyote Lake 963S)

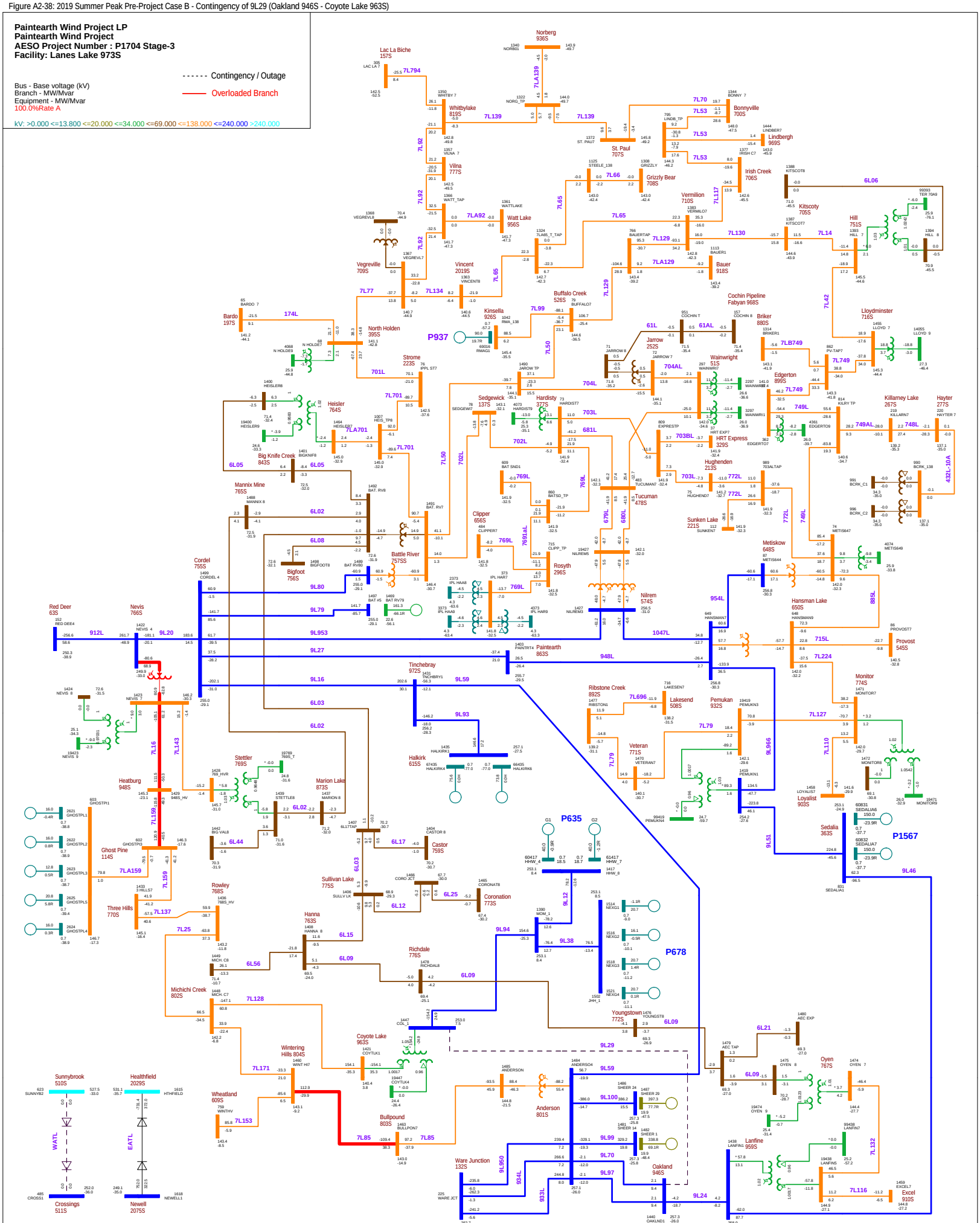

Figure A2-39: 2019 Summer Peak Pre-Project Case B - Contingency of 7L77 (North Holden 395S - Vegreville 709S)

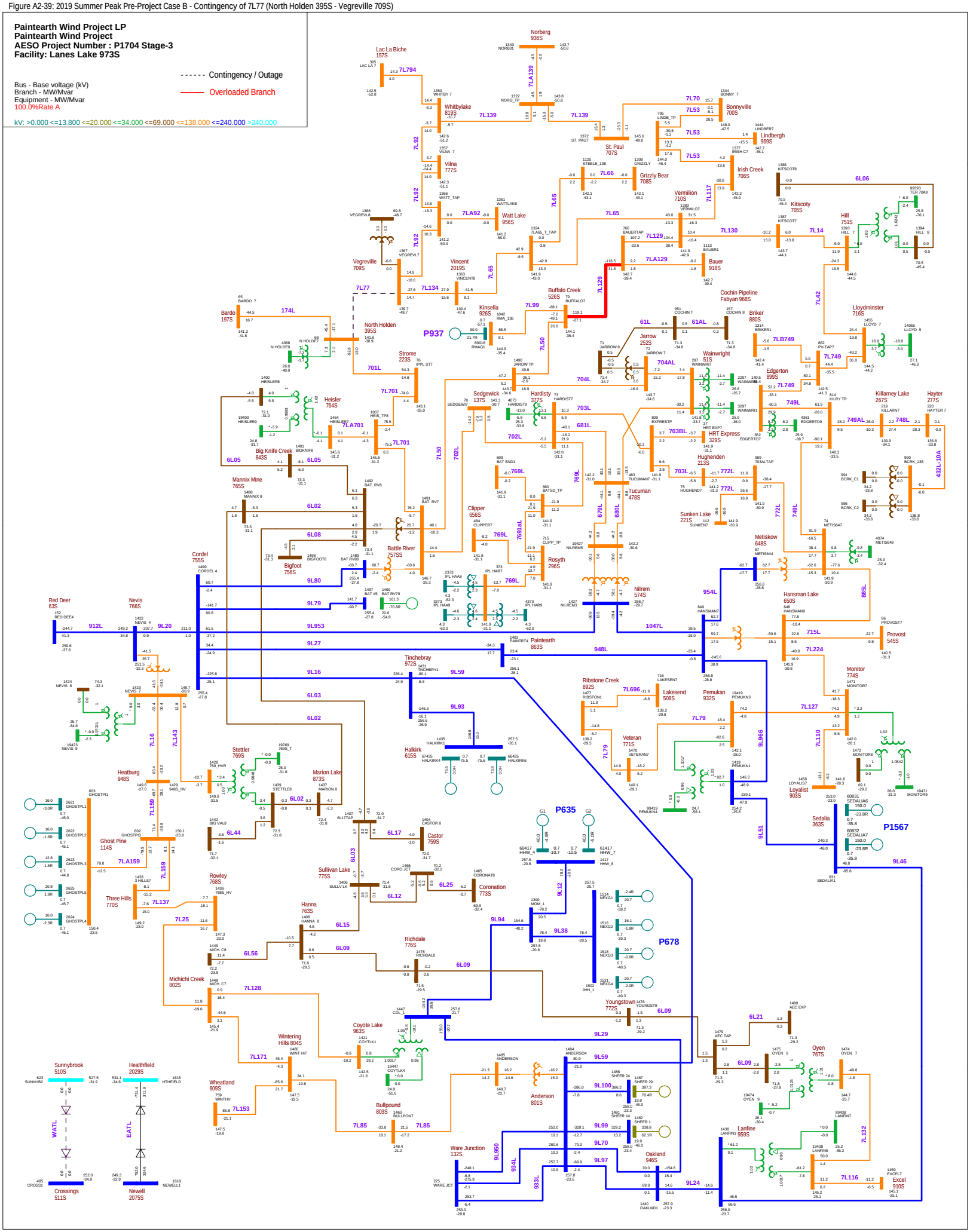

Figure A2-40: 2019 Summer Peak Pre-Project Case B - Contingency of 966L\9L966 (Hansman Lake 650S - Pemukan 932S)

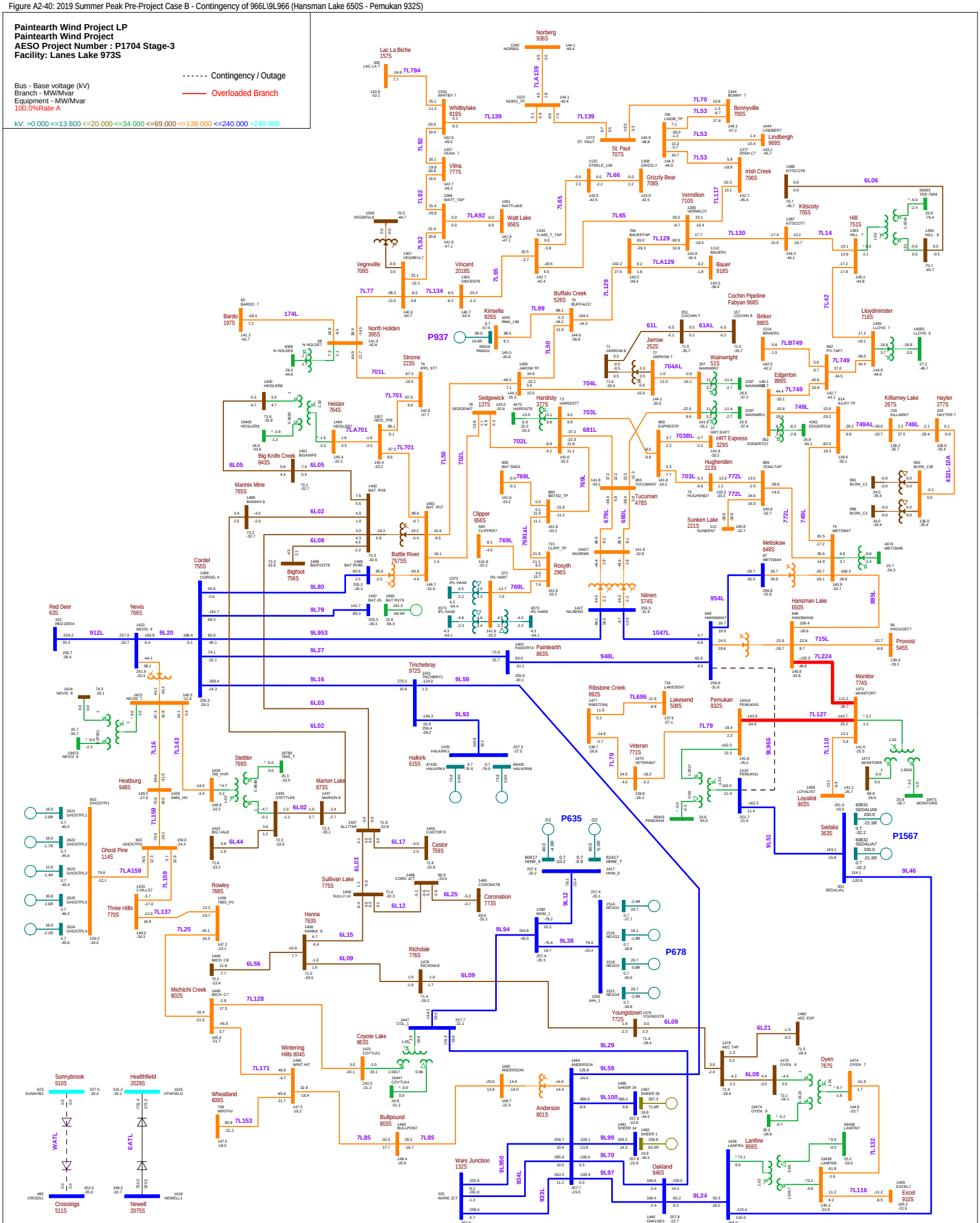
Paintearth Wind Project LP
Paintearth Wind Project
AESO Project Number : P1704 Stage-3
Facility: Lanes Lake 973S
Contingency / Outage
Overloaded Branch
Bus - Base voltage (kV)
Branch - MW/Mvar
Equipment - MW/Mvar
100.0%Rate A
kV: >0.000 <=13.800 <=20.000 <=34.000 <=69.000 <=138.000 <=240.000 >240.000
Norberg 936S
Lac La Biche 157S
Whitbylake 819S
Vilna 777S
Watt Lake 956S
Vegreville 709S
Vincent 2019S
St. Paul 707S
Vermilion 710S
Grizzly Bear 708S
Bonnyville 700S
Lindbergh 969S
Irish Creek 706S
Kitscoty 705S
Hill 751S
Lloydminster 716S
Cochin Pipeline
Fabyan 968S
Briker 880S
Jarrow 252S
Wainwright 51S
Edgerton 899S
Killarney Lake 267S
Hayter 277S
Bardo 197S
North Holden 395S
Kinsella 926S
Buffalo Creek 526S
Bauer 918S
Strome 223S
Heisler 764S
Sedgewick 137S
Hardisty 377S
HRT Express 329S
Hughenden 213S
Sunken Lake 221S
Tucuman 478S
Big Knife Creek 843S
Mannix Mine 765S
Clipper 656S
Rosyth 296S
Battle River 757SS
Bigfoot 756S
Cordel 755S
Nilrem 574S
Metiskow 648S
Hansman Lake 650S
Provost 545S
Paintearth 863S
Red Deer 63S
Nevis 766S
Tinchebray 972S
Ribstone Creek 892S
Lakesend 508S
Pemukan 932S
Monitor 774S
Veteran 771S
Loyalist 903S
Sedalia 363S
Halkirk 615S
Stettler 769S
Heatburg 948S
Marion Lake 873S
Castor 759S
Ghost Pine 114S
Three Hills 770S
Rowley 768S
Sullivan Lake 775S
Coronation 773S
Hanna 763S
Richdale 776S
Youngstown 772S
Michichi Creek 802S
Wintering Hills 804S
Coyote Lake 963S
Wheatland 609S
Bullpound 803S
Anderson 801S
Ware Junction 132S
Oakland 946S
Lanfine 959S
Oyen 767S
Sunnybrook 510S
Healthfield 2029S
Crossings 511S
Newell 2075S
Excel 910S
P937
P635
P678
P1567
P966
P550
WATL
EATL
174L
912L
1047L
954L
885L
432L-10A
7L92
7L65
7L66
7L70
7L53
7L139
7L794
7L77
7L134
7L65
7L92
7L92
7L92

Figure A2-41: 2019 Summer Peak Pre-Project Case B - Contingency of 766S901T (Nevis 766S Transformer 901T)

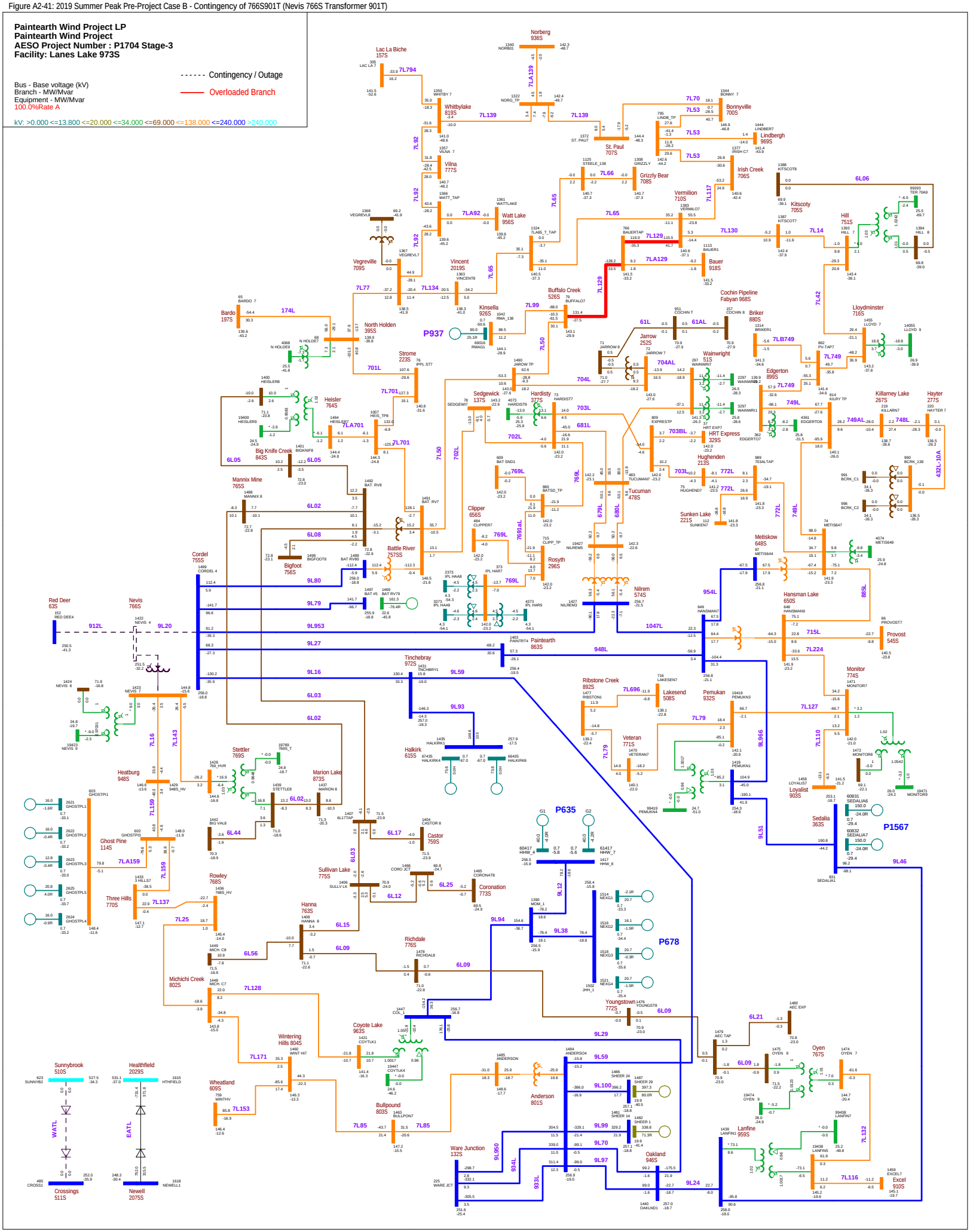
Paintearth Wind Project LP
Paintearth Wind Project
AESO Project Number : P1704 Stage-3
Facility: Lanes Lake 973S
Contingency / Outage
Overloaded Branch
Bus - Base voltage (kV)
Branch - MW/Mvar
Equipment - MW/Mvar
100.0%Rate A
kV: >0.000 <=13.800 <=20.000 <=34.000 <=69.000 <=138.000 <=240.000 >240.000
Norberg 936S
Lac La Biche 157S
Whitbylake 819S
Vilna 777S
Watt Lake 956S
Vegreville 709S
Vincent 2019S
Kinsella 926S
Buffalo Creek 526S
Bardo 197S
North Holden 395S
Strome 223S
Heisler 764S
Big Knife Creek 843S
Mannix Mine 765S
Cordel 755S
Red Deer 63S
Nevis 766S
Bigfoot 756S
Battle River 757SS
Sedgewick 137S
Hardisty 377S
Clipper 656S
Rosyth 296S
Tucuman 478S
Nilrem 574S
Paintearth 863S
Tinchebray 972S
Halkirk 615S
Stettler 769S
Heatburg 948S
Marion Lake 873S
Ghost Pine 114S
Three Hills 770S
Rowley 768S
Hanna 763S
Sullivan Lake 775S
Castor 759S
Coronation 773S
Richdale 776S
Michichi Creek 802S
Wintering Hills 804S
Coyote Lake 963S
Wheatland 609S
Bullpound 803S
Anderson 801S
Ware Junction 132S
Oakland 946S
Youngstown 772S
Sunnybrook 510S
Healthfield 2029S
Crossings 511S
Newell 2075S
St. Paul 707S
Vermilion 710S
Grizzly Bear 708S
Irish Creek 706S
Bonnyville 700S
Lindbergh 969S
Kitscoty 705S
Hill 751S
Jarrow 252S
Wainwright 51S
Edgerton 899S
Briker 880S
Lloydminster 716S
Killarney Lake 267S
Hayter 277S
Cochin Pipeline
Fabyan 968S
Sunken Lake 221S
Hughenden 213S
HRT Express 329S
Metiskow 648S
Hansman Lake 650S
Provost 545S
Monitor 774S
Lakesend 508S
Pemukan 932S
Veteran 771S
Ribstone Creek 892S
Loyalist 903S
Sedalia 363S
Lanfine 959S
Excel 910S
Oyen 767S
P937
P635
P678
P1567
Bauer 918S
Jarrow
Cochin T
Cochin 8
Wainwright
Edgerton
Briker
Lloydminster
Hill
Kitscoty
Irish Creek
Grizzly Bear
Vermilion
St. Paul
Bonnyville
Lindbergh
Lakesend
Pemukan
Veteran
Ribstone Creek
Loyalist
Sedalia
Lanfine
Excel
Oyen
Hughenden
Sunken Lake
Hansman Lake
Metiskow
Provost
Monitor
Tucuman
Nilrem
Paintearth
Rosyth
Clipper
Sedgewick
Hardisty
Kinsella
Buffalo Creek
Vincent
Vegreville
Watt Lake
Vilna
Whitbylake
Norberg
Lac La Biche
Bardo
North Holden
Strome
Heisler
Big Knife Creek
Mannix Mine
Cordel
Red Deer
Nevis
Bigfoot
Battle River
Tinchebray
Halkirk
Stettler
Heatburg
Marion Lake
Ghost Pine
Three Hills
Rowley
Hanna
Sullivan Lake
Castor
Coronation
Richdale
Michichi Creek
Wintering Hills
Coyote Lake
Wheatland
Bullpound
Anderson
Ware Junction
Oakland
Youngstown
Sunnybrook
Healthfield
Crossings
Newell
912L
9L20
9L80
9L79
9L953
9L27
9L16
9L59
9L93
6L03
6L02
6L08
6L05
6L02
6L02
6L44
6L17
6L03
6L25
6L12
6L15
6L09
6L56
7L25
7L128
7L171
7L153
7L85
7L85
9L29
9L59
9L100
9L99
9L70
9L97
9L24
9L950
934L
933L
9L94
9L38
9L12
948L
1047L
954L
885L
9L51
9L966
7L127
7L110
7L224
715L
7L79
7L696
7L749
7L748
7L749
7L749A
7L749L
7L14
7L130
7L129
7L65
7L66
7L92
7L93
7L139
7L139
7L70
7L53
7L53
7L53
7L117
7L65
7L129
7L129A
7L42
6L06
7LB749
61L
61AL
704AL
704L
703L
703BL
703AL
681L
702L
702L
769L
769L
769L
769AL
679L
680L
772L
772L
749L
7L50
7L50
7L99
7L65
7L66
7L92
7L92
7L92
7L92A
7L134
7L77
7L701
7L701
7L701
7LA701
7LA139
7LA92
7LA129
6L05
6L05
174L
P937
6L06
7L14
7L116
7L132
7L42
432L-10A
748L
749AL
7L749
7L749
7L749
7LB749
7L749
7L749
7L

Figure A2-42: 2019 Summer Peak Pre-Project Case B - Contingency of 749L\749AL (Metiskow 648S - Edgerton 899S)

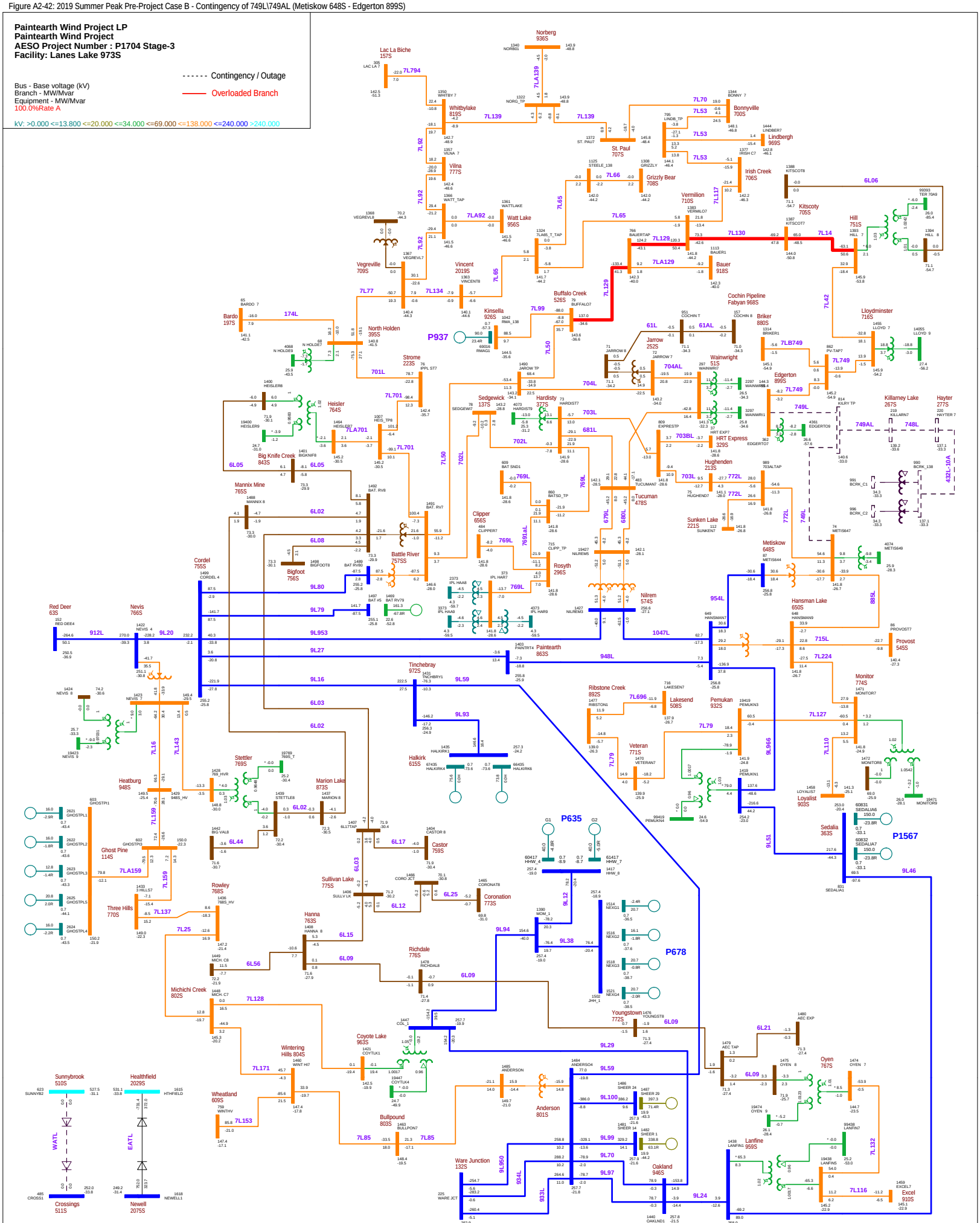
Paintearth Wind Project LP
Paintearth Wind Project
AESO Project Number : P1704 Stage-3
Facility: Lanes Lake 973S
Contingency / Outage
Overloaded Branch
Bus - Base voltage (kV)
Branch - MW/Mvar
Equipment - MW/Mvar
100.0%Rate A
kV: >0.000 <=13.800 <=20.000 <=34.000 <=69.000 <=138.000 <=240.000 >240.000
Norberg 936S
Lac La Biche 157S
Whitbylake 819S
Vilna 777S
Watt Lake 956S
Vegreville 709S
Vincent 2019S
Kinsella 926S
Buffalo Creek 526S
St. Paul 707S
Bonnyville 700S
Lindbergh 969S
Irish Creek 706S
Kitscoty 705S
Grizzly Bear 708S
Vermilion 710S
Bauer 918S
Hill 751S
Lloydminster 716S
Cochin Pipeline
Fabyan 968S
Briker 880S
Jarrow 252S
Wainwright 51S
Edgerton 899S
Killarney Lake 267S
Hayter 277S
HRT Express 329S
Hughenden 213S
Sunken Lake 221S
Tucuman 478S
Metiskow 648S
Hansman Lake 650S
Provost 545S
Monitor 774S
Lakesend 508S
Pemukan 932S
Loyalist 903S
Sedalia 363S
Ribstone Creek 892S
Veteran 771S
Youngstown 772S
Oyen 767S
Lanfine 959S
Excel 910S
Paintearth 863S
Nilrem 574S
Rosyth 296S
Clipper 656S
Battle River 757SS
Sedgewick 137S
Hardisty 377S
Strome 223S
North Holden 395S
Bardo 197S
Heisler 764S
Big Knife Creek 843S
Mannix Mine 765S
Cordel 755S
Bigfoot 756S
Red Deer 63S
Nevis 766S
Tinchebray 972S
Halkirk 615S
Stettler 769S
Heatburg 948S
Marion Lake 873S
Castor 759S
Ghost Pine 114S
Three Hills 770S
Rowley 768S
Sullivan Lake 775S
Coronation 773S
Hanna 763S
Richdale 776S
Michichi Creek 802S
Wintering Hills 804S
Wheatland 609S
Coyote Lake 963S
Bullpound 803S
Anderson 801S
Ware Junction 132S
Oakland 946S
Sunnybrook 510S
Crossings 511S
Healthfield 2029S
Newell 2075S
P937
P635
P678
P1567
174L
912L
9L20
9L80
9L79
9L953
9L27
9L16
9L59
9L93
6L02
6L03
6L08
6L05
6L44
6L17
6L25
6L12
6L15
6L09
6L56
7L16
7L143
7L159
7L169
7L137
7L25
7L128
7L171
7L153
7L85
7L92
7L65
7L66
7L139
7L794
7L77
7L134
7L65
7L50
7L99
7L701
7L702
7L703
7L704
7L705
7L706
7L707
7L708
7L709
7L710
7L711
7L712
7L713
7L714
7L715
7L716
7L717
7L718
7L719
7L720
7L721
7L722
7L723
7L724
7L725
7L726
7L727
7L728
7L729
7L730
7L731
7L732
7L733
7L734
7L735
7L736
7L737
7L738
7L739
7L740
7L741
7L742
7L743
7L744
7L745
7L746
7L747
7L748
7L749
7L750
7L751
7L752
7L753
7L754
7L755
7L756
7L757
7L758
7L759
7L760
7L761
7L762
7L763
7L764
7L765
7L766
7L767
7L768
7L769
7L770
7L771
7L772
7L773
7L774
7L775
7L776
7L777
7L778
7L779
7L780
7L781
7L782
7L783
7L784
7L785
7L786
7L787
7L788
7L789
7L790
7L791
7L792
7L793
7L794
7L795
7L796
7L797
7L798
7L799
7L800
7L801
7L802
7L803
7L804
7L805
7L806
7L807
7L808
7L809
7L810
7L811
7L812
7L813
7L814
7L815
7L816
7L817
7L818
7L819
7L820
7L821
7L822
7L823
7L824
7L825
7L826
7L827
7L828
7L829
7L830
7L831
7L832
7L833
7L834
7L835
7L836
7L837
7L838
7L839
7L840
7L841
7L842
7L843
7L844
7L845
7L846
7L847
7L848
7L849
7L850
7L851
7L852
7L853
7L854
7L855
7L856
7L857
7L858
7L859
7L860
7L861
7L862
7L863
7L864
7L865
7L866
7L867
7L868
7L869
7L870
7L871
7L872
7L873
7L874
7L875
7L876
7L877
7L878
7L879
7L880
7L881
7L882
7L883
7L884
7L885
7L886
7L887
7L888
7L889
7L890
7L891
7L892
7L893
7L894
7L895
7L896
7L897
7L898
7L899
7L900
7L901
7L902
7L903
7L904
7L905
7L906
7L907
7L908
7L909
7L910
7L911
7L912
7L913
7L914
7L915
7L916
7L917
7L918
7L919
7L920
7L921
7L922
7L923
7L924
7L925
7L926
7L927
7L928
7L929
7L930
7L931
7L932
7L933
7L934
7L935
7L936
7L937
7L938
7L939
7L940
7L941
7L942
7L943
7L944
7L945
7L946
7L947
7L948
7L949
7L950
7L951
7L952
7L953
7L954
7L955
7L956
7L957
7L958
7L959
7L960
7L961
7L962
7L963
7L964
7L965
7L966
7L967
7L968
7L969
7L970
7L971
7L972
7L973
7L974
7L975
7L976
7L977
7L978
7L979
7L980
7L981
7L982
7L983
7L984
7L985
7L986
7L987
7L988
7L989
7L990
7L991
7L992
7L993
7L994
7L995
7L996
7L997
7L998
7L999
7L1000
7L1001
7L1002
7L1003
7L1004
7L1005
7L1006
7L1007
7L1008
7L1009
7L1010
7L1011
7L1012
7L1013
7L1014
7L1015
7L1016
7L1017
7L1018
7L1019
7L1020
7L1021
7L1022
7L1023
7L1024
7L1025
7L1026
7L1027
7L1028
7L1029
7L1030
7L1031
7L1032
7L1033
7L1034
7L1035
7L1036
7L1037
7L1038
7L1039
7L1040
7L1041
7L1042
7L1043
7L1044
7L1045
7L1046
7L1047
7L1048
7L1049
7L1050
7L1051
7L1052
7L1053
7L1054
7L1055
7L1056
7L1057
7L1058
7L1059
7L1060
7L1061
7L1062
7L1063
7L1064
7L1065
7L1066
7L1067
7L1068
7L1069
7L1070
7L1071
7L1072
7L1073
7L1074
7L1075
7L1076
7L1077
7L1078
7L1079
7L1080
7L1081
7L1082
7L1083
7L1084
7L1085
7L1086
7L1087
7L1088
7L1089
7L1090
7L1091
7L1092
7L1093
7L1094
7L1095
7L1096
7L1097
7L1098
7L1099
7L1100
7L1101
7L1102
7L1103
7L1104
7L1105
7L1106
7L1107
7L1108
7L1109
7L1110
7L1111
7L1112
7L1113
7L1114
7L1115
7L1116
7L1117
7L1118
7L1119
7L1120
7L1121
7L1122
7L1123
7L1124
7L1125
7L1126
7L1127
7L1128
7L1129
7L1130
7L1131
7L1132
7L1133
7L1134
7L1135
7L1136
7L1137
7L1138
7L1139
7L1140
7L1141
7L1142
7L1143
7L1144
7L1145
7L1146
7L1147
7L1148
7L1149
7L1150
7L1151
7L1152
7L1153
7L1154
7L1155
7L1156
7L1157
7L1158
7L1159
7L1160
7L1161
7L1162
7L1163
7L1164
7L1165
7L1166
7L1167
7L1168
7L1169
7L1170
7L1171
7L1172
7L1173
7L1174
7L1175
7L1176
7L1177
7L1178
7L1179
7L1180
7L1181
7L1182
7L1183
7L1184
7L1185
7L1186
7L1187
7L1188
7L1189
7L1190
7L1191
7L1192
7L1193
7L1194
7L1195
7L1196
7L1197
7L1198
7L1199
7L1200
7L1201
7L1202
7L1203
7L1204
7L1205
7L1206
7L1207
7L1208
7L1209
7L1210
7L1211
7L1212
7L1213
7L1214
7L1215
7L1216
7L1217
7L1218
7L1219
7L1220
7L1221
7L1222
7L1223
7L1224
7L1225
7L1226
7L1227
7L1228
7L1229
7L1230
7L1231
7L1232
7L1233
7L1234
7L1235
7L1236
7L1237
7L1238
7L1239
7L1240
7L1241
7L1242
7L1243
7L1244
7L1245
7L1246
7L1247
7L1248
7L1249
7L1250
7L1251
7L1252
7L1253
7L1254
7L1255
7L1256
7L1257
7L1258
7L1259
7L1260
7L1261
7L1262
7L1263
7L1264
7L1265
7L1266
7L1267
7L1268
7L1269
7L1270
7L1271
7L1272
7L1273
7L1274
7L1275
7L1276
7L1277
7L1278
7L1279
7L1280
7L1281
7L1282
7L1283
7L1284
7L1285
7L1286
7L1287
7L1288
7L1289
7L1290
7L1291
7L1292
7L1293
7L1294
7L1295
7L1296
7L1297
7L1298
7L1299
7L1300
7L1301
7L1302
7L1303
7L1304
7L1305
7L1306
7L1307
7L1308
7L1309
7L1310
7L1311
7L1312
7L1313
7L1314
7L1315
7L1316
7L1317
7L1318
7L1319
7L1320
7L1321
7L1322
7L1323
7L1324
7L1325
7L1326
7L1327
7L1328
7L1329
7L1330
7L1331
7L1332
7L1333
7L1334
7L1335
7L1336
7L1337
7L1338
7L1339
7L1340
7L1341
7L1342
7L1343
7L1344
7L1345
7L1346
7L1347
7L1348
7L1349
7L1350
7L1351
7L1352
7L1353
7L1354
7L1355
7L1356
7L1357
7L1358
7L1359
7L1360
7L1361
7L1362
7L1363
7L1364
7L1365
7L1366
7L1367
7L1368
7L1369
7L1370
7L1371
7L1372
7L1373
7L1374
7L1375
7L1376
7L1377
7L1378
7L1379
7L1380
7L1381
7L1382
7L1383
7L1384
7L1385
7L1386
7L1387
7L1388
7L1389
7L1390
7L1391
7L1392
7L1393
7L1394
7L1395
7L1396
7L1397
7L1398
7L1399
7L1400
7L1401
7L1402
7L1403
7L1404
7L1405
7L1406
7L1407
7L1408
7L1409
7L1410
7L1411
7L1412
7L1413
7L1414
7L1415
7L1416
7L1417
7L1418
7L1419
7L1420
7L1421
7L1422
7L1423
7L1424
7L1425
7L1426
7L1427
7L1428
7L1429
7L1430
7L1431
7L1432
7L1433
7L1434
7L1435
7L1436
7L1437
7L1438
7L1439
7L1440
7L1441
7L1442
7L1443
7L1444
7L1445
7L1446
7L1447
7L1448
7L1449
7L1450
7L1451
7L1452
7L1453
7L1454
7L1455
7L1456
7L1457
7L1458
7L1459
7L1460
7L1461
7L1462
7L1463
7L1464
7L1465
7L1466
7L1467
7L1468
7L1469
7L1470
7L1471
7L1472
7L1473
7L1474
7L1475
7L1476
7L1477
7L1478
7L1479
7L1480
7L1481
7L1482
7L1483
7L1484
7L1485
7L1486
7L1487
7L1488
7L1489
7L1490
7L1491
7L1492
7L1493
7L1494
7L1495
7L1496
7L1497
7L1498
7L1499
7L1500
7L1501
7L1502
7L1503
7L1504
7L1505
7L1506
7L1507
7L1508
7L1509
7L1510
7L1511
7L1512
7L1513
7L1514
7L1515
7L1516
7L1517
7L1518
7L1519
7L1520
7L1521
7L1522
7L1523
7L1524
7L1525
7L1526
7L1527
7L1528
7L1529
7L1530
7L1531
7L1532
7L1533
7L1534
7L1535
7L1536
7L1537
7L1538
7L1539
7L1540
7L1541
7L1542
7L1543
7L1544
7L1545
7L1546
7L1547
7L1548
7L1549
7L1550
7L1551
7L1552
7L1553
7L1554
7L1555
7L1556
7L1557
7L1558
7L1559
7L1560
7L1561
7L1562
7L1563
7L1564
7L1565
7L1566
7L1567
7L1568
7L1569
7L1570
7L1571
7L1572
7L1573
7L1574
7L1575
7L1576
7L1577
7L1578
7L1579
7L1580
7L1581
7L1582
7L1583
7L1584
7L1585
7L1586
7L1587
7L1588
7L1589
7L1590
7L1591
7L1592
7L1593
7L1594
7L1595
7L1596
7L1597
7L1598
7L1599
7L1600
7L1601
7L1602
7L1603
7L1604
7L1605
7L1606
7L1607
7L1608
7L1609
7L1610
7L1611
7L1612
7L1613
7L1614
7L1615
7L1616
7L1617
7L1618
7L1619
7L1620
7L1621
7L1622
7L1623
7L1624
7L1625
7L1626
7L1627
7L1628
7L1629
7L1630
7L1631
7L1632
7L1633
7L1634
7L1635
7L1636
7L1637
7L1638
7L1639
7L1640
7L1641
7L1642
7L1643
7L1644
7L1645
7L1646
7L1647
7L1648
7L1649
7L1650
7L1651
7L1652
7L1653
7L1654
7L1655
7L1656
7L1657
7L1658
7L1659
7L1660
7L1661
7L1662
7L1663
7L1664
7L1665
7L1666
7L1667
7L1668
7L1669
7L1670
7L1671
7L1672
7L1673
7L1674
7L1675
7L1676
7L1677
7L1678
7L1679
7L1680
7L1681
7L1682
7L1683
7L1684
7L1685
7L1686
7L1687
7L1688
7L1689
7L1690
7L1691
7L1692
7L1693
7L1694
7L1695
7L1696
7L1697
7L1698
7L1699
7L1700
7L1701
7L1702
7L1703
7L1704
7L1705
7L1706
7L1707
7L1708
7L1709
7L1710
7L1711
7L1712
7L1713
7L1714
7L1715
7L1716
7L1717
7L1718
7L1719
7L1720
7L1721
7L1722
7L1723
7L1724
7L1725
7L1726
7L1727
7L1728
7L1729
7L1730
7L1731
7L1732
7L1733
7L1734
7L1735
7L1736
7L1737
7L1738
7L1739
7L1740
7L1741
7L1742
7L1743
7L1744
7L1745
7L1746
7L1747
7L1748
7L1749
7L1750
7L1751
7L1752
7L1753
7L1754
7L1755
7L1756
7L1757
7L1758
7L1759
7L1760
7L1761
7L1762
7L1763
7L1764
7L1765
7L1766
7L1767
7L1768
7L1769
7L1770
7L1771
7L1772
7L1773
7L1774
7L1775
7L1776
7L1777
7L1778
7L1779
7L1780
7L1781
7L1782
7L1783
7L1784
7L1785
7L1786
7L1787
7L1788
7L1789
7L1790
7L1791
7L1792
7L1793
7L1794
7L1795
7L1796
7L1797
7L1798
7L1799
7L1800
7L1801
7L1802
7L1803
7L1804
7L1805
7L1806
7L1807
7L1808
7L1809
7L1810
7L1811
7L1812
7L1813
7L1814
7L1815
7L1816
7L1817
7L1818
7L1819
7L1820
7L1821
7L1822
7L1823
7L1824
7L1825
7L1826
7L1827
7L1828
7L1829
7L1830
7L1831
7L1832
7L1833
7L1834
7L1835
7L1836
7L1837
7L1838
7L1839
7L1840
7L1841
7L1842
7L1843
7L1844
7L1845
7L1846
7L1847
7L1848
7L1849
7L1850
7L1851
7L1852
7L1853
7L1854
7L1855
7L1856
7L1857
7L1858
7L1859
7L1860
7L1861
7L1862
7L1863
7L1864
7L1865
7L1866
7L1867
7L1868
7L1869
7L1870
7L1871
7L1872
7L1873
7L1874
7L1875
7L1876
7L1877
7L1878
7L1879
7L1880
7L1881
7L1882
7L1883
7L1884
7L1885
7L1886
7L1887
7L1888
7L1889
7L1890
7L1891
7L1892
7L1893
7L1894
7L1895
7L1896
7L1897
7L1898
7L1899
7L1900
7L1901
7L1902
7L1903
7L1904
7L1905
7L1906
7L1907
7L1908
7L1909
7L1910
7L1911
7L1912
7L1913
7L1914
7L1915
7L1916
7L1917
7L1918
7L1919
7L1920
7L1921
7L1922
7L1923
7L1924
7L1925
7L1926
7L1927
7L1928
7L1929
7L1930
7L1931
7L1932
7L1933
7L1934
7L1935
7L1936
7L1937
7L1938
7L1939
7L1940
7L1941
7L1942
7L1943
7L1944
7L1945
7L1946
7L1947
7L1948
7L1949
7L1950
7L1951
7L1952
7L1953
7L1954
7L1955
7L1956
7L1957
7L1958
7L1959
7L1960
7L1961
7L1962
7L1963
7L1964
7L1965
7L1966
7L1967
7L1968
7L1969
7L1970
7L1971
7L1972
7L1973
7L1974
7L1975
7L1976
7L1977
7L1978
7L1979
7L1980
7L1981
7L1982
7L1983
7L1984
7L1985
7L1986
7L1987
7L1988
7L1989
7L1990
7L1991
7L1992
7L1993
7L1994
7L1995
7L1996
7L1997
7L1998
7L1999
7L2000
7L2001
7L2002
7L2003
7L2004
7L2005
7L2006
7L2007
7L2008
7L2009
7L2010
7L2011
7L2012
7L2013
7L2014
7L2015
7L2016
7L2017
7L2018
7L2019
7L2020
7L2021
7L2022
7L2023
7L2024
7L2025
7L2026
7L2027
7L2028
7L2029
7L2030
7L2031
7L2032
7L2033
7L2034
7L2035
7L2036
7L2037
7L2038
7L2039
7L2040
7L2041
7L2042
7L2043
7L2044
7L2045
7L2046
7L2047
7L2048
7L2049
7L2050
7L2051
7L2052
7L2053
7L2054
7L2055
7L2056
7L2057
7L2058
7L2059
7L2060
7L2061
7L2062
7L2063
7L2064
7L2065
7L2066
7L2067
7L2068
7L2069
7L2070
7L2071
7L2072
7L2073
7L2074
7L2075
7L2076
7L2077
7L2078
7L2079
7L2080
7L2081
7L2082
7L2083
7L2084
7L2085
7L2086
7L2087
7L2088
7L2089
7L2090
7L2091
7L2092
7L2093
7L2094
7L2095
7L2096
7L2097
7L2098
7L2099
7L2100
7L2101
7L2102
7L2103
7L2104
7L2105
7L2106
7L2107
7L2108
7L2109
7L2110
7L2111
7L2112
7L2113
7L2114
7L2115
7L2116
7L2117
7L2118
7L2119
7L2120
7L2121
7L2122
7L2123
7L2124
7L2125
7L2126
7L2127
7L2128
7L2129
7L2130
7L2131
7L2132
7L2133
7L2134
7L2135
7L2136
7L2137
7L2138
7L2139
7L2140
7L2141
7L2142
7L2143
7L2144
7L2145
7L2146
7L2147
7L2148
7L2149
7L2150
7L2151
7L2152
7L2153
7L2154
7L2155
7L2156
7L2157
7L2158
7L2159
7L2160
7L2161
7L2162
7L2163
7L2164
7L2165
7L2166
7L2167
7L2168
7L2169
7L2170
7L2171
7L2172
7L2173
7L2174
7L2175
7L2176
7L2177
7L2178
7L2179
7L2180
7L2181
7L2182
7L2183
7L2184
7L2185
7L2186
7L2187
7L2188
7L2189
7L2190
7L2191
7L2192
7L2193
7L2194
7L2195
7L2196
7L2197
7L2198
7L2199
7L2200
7L2201
7L2202
7L2203
7L2204
7L2205
7L2206
7L2207
7L2208
7L2209
7L2210
7L2211
7L2212
7L2213
7L2214
7L2215
7L2216
7L2217
7L2218
7L2219
7L2220
7L2221
7L2222
7L2223
7L2224
7L2225
7L2226
7L2227
7L2228
7L2229
7L2230
7L2231
7L2232
7L2233
7L2234
7L2235
7L2236
7L2237
7L2238
7L2239
7L2240
7L2241
7L2242
7L2243
7L2244
7L2245
7L2246
7L2247
7L2248
7L2249
7L2250
7L2251
7L2252
7L2253
7L2254
7L2255
7L2256
7L2257
7L2258
7L2259
7L2260
7L2261
7L2262
7L2263
7L2264
7L2265
7L2266
7L2267
7L2268
7L2269
7L2270
7L2271
7L2272
7L2273
7L2274
7L2275
7L2276
7L2277
7L2278
7L2279
7L2280
7L2281
7L2282
7L2283
7L2284
7L2285
7L2286
7L2287
7L2288
7L2289
7L2290
7L2291
7L2292
7L2293
7L2294
7L2295
7L2296
7L2297
7L2298
7L2299
7L2300
7L2301
7L2302
7L2303
7L2304
7L2305
7L2306
7L2307
7L2308
7L2309
7L2310
7L2311
7L2312
7L2313
7L2314
7L2315
7L2316
7L2317
7L2318
7L2319
7L2320
7L2321
7L2322
7L2323
7L2324
7L2325
7L2326
7L2327
7L2328
7L2329
7L2330
7L2331
7L2332
7L2333
7L2334
7L2335
7L2336
7L2337
7L2338
7L2339
7L2340
7L2341
7L2342
7L2343
7L2344
7L2345
7L2346
7L2347
7L2348
7L2349
7L2350
7L2351
7L2352
7L2353
7L2354
7L2355
7L2356
7L2357
7L2358
7L2359
7L2360
7L2361
7L2362
7L2363
7L2364
7L2365
7L2366
7L2367
7L2368
7L2369
7L2370
7L2371
7L2372
7L2373
7L2374
7L2375
7L2376
7L2377
7L2378
7L2379
7L2380
7L2381
7L2382
7L2383
7L2384
7L2385
7L2386
7L2387
7L2388
7L2389
7L2390
7L2391
7L2392
7L2393
7L2394
7L2395
7L2396
7L2397
7L2398
7L2399
7L2400
7L2401
7L2402
7L2403
7L2404
7L2405
7L2406
7L2407
7L2408
7L2409
7L2410
7L2411
7L2412
7L2413
7L2414
7L2415
7L2416
7L2417
7L2418
7L2419
7L2420
7L2421
7L2422
7L2423
7L2424
7L2425
7L2426
7L2427
7L2428
7L2429
7L2430
7L2431
7L2432
7L2433
7L2434
7L2435
7L2436
7L2437
7L2438
7L2439
7L2440
7L2441
7L2442
7L2443
7L2444
7L2445
7L2446
7L2447
7L2448
7L2449
7L2450
7L2451
7L2452
7L2453
7L2454
7L2455
7L2456
7L2457
7L2458
7L2459
7L2460
7L2461
7L2462
7L2463
7L2464
7L2465
7L2466
7L2467
7L2468
7L2469
7L2470
7L2471
7L2472
7L2473
7L2474
7L2475
7L2476
7L2477
7L2478
7L2479
7L2480
7L2481
7L2482
7L2483
7L2484
7L2485
7L2486
7L2487
7L2488
7L2489
7L2490
7L2491
7L2492
7L2493
7L2494
7L2495
7L2496
7L2497
7L2498
7L2499
7L2500
7L2501
7L2502
7L2503
7L2504
7L2505
7L2506
7L2507
7L2508
7L2509
7L2510
7L2511
7L2512
7L2513
7L2514
7L2515
7L2516
7L2517
7L2518
7L2519
7L2520
7L2521
7L2522
7L2523
7L2524
7L2525
7L2526
7L2527
7L2528
7L2529
7L2530
7L2531
7L2532
7L2533
7L2534
7L2535
7L2536
7L2537
7L2538
7L2539
7L2540
7L2541
7L2542
7L2543
7L2544
7L2545
7L2546
7L2547
7L2548
7L2549
7L2550
7L2551
7L2552
7L2553
7L2554
7L2555
7L2556
7L2557
7L2558
7L2559
7L2560
7L2561
7L2562
7L2563
7L2564
7L2565
7L2566
7L2567
7L2568
7L2569
7L2570
7L2571
7L2572
7L2573
7L2574
7L2575
7L2576
7L2577
7L2578
7L2579
7L2580
7L2581
7L2582
7L2583
7L2584
7L2585
7L2586
7L2587
7L2588
7L2589
7L2590
7L2591
7L2592
7L2593
7L2594
7L2595
7L2596
7L2597
7L2598
7L2599
7L2600
7L2601
7L2602
7L2603
7L2604
7L2605
7L2606
7L2607
7L2608
7L2609
7L2610
7L2611
7L2612
7L2613
7L2614
7L2615
7L2616
7L2617
7L2618
7L2619
7L2620
7L2621
7L2622
7L2623
7L2624
7L2625
7L2626
7L2627
7L2628
7L2629
7L2630
7L2631
7L2632
7L2633
7L2634
7L2635
7L2636
7L2637
7L2638
7L2639
7L2640
7L2641
7L2642
7L2643
7L2644
7L2645
7L2646
7L2647
7L2648
7L2649
7L2650
7L2651
7L2652
7L2653
7L2654
7L2655
7L2656
7L2657
7L2658
7L2659
7L2660
7L2661
7L2662
7L2663
7L2664
7L2665
7L2666
7L2667
7L2668
7L2669
7L2670
7L2671
7L2672
7L2673
7L2674
7L2675
7L2676
7L2677
7L2678
7L2679
7L2680
7L2681
7L2682
7L2683
7L2684
7L2685
7L2686
7L2687
7L2688
7L2689
7L2690
7L2691
7L2692
7L2693
7L2694
7L2695
7L2696
7L2697
7L2698
7L2699
7L2700
7L2701
7L2702
7L2703
7L2704
7L2705
7L2706
7L2707
7L2708
7L2709
7L2710
7L2711
7L2712
7L2713
7L2714
7L2715
7L2716
7L2717
7L2718
7L2719
7L2720
7L2721
7L2722
7L2723
7L2724
7L2725
7L2726
7L2727
7L2728
7L2729
7L2730
7L2731
7L2732
7L2733
7L2734
7L2735
7L2736
7L2737
7L2738
7L2739
7L2740
7L2741
7L2742
7L2743
7L2744
7L2745
7L2746
7L2747
7L2748
7L2749
7L2750
7L2751
7L2752
7L2753
7L2754
7L2755
7L2756
7L2757
7L2758
7L2759
7L2760
7L2761
7L2762
7L2763
7L2764
7L2765
7L2766
7L2767
7L2768
7L2769
7L2770
7L2771
7L2772
7L2773
7L2774
7L2775
7L2776
7L2777
7L2778
7L2779
7L2780
7L2781
7L2782
7L2783
7L2784
7L2785
7L2786
7L2787
7L2788
7L2789
7L2790
7L2791
7L2792
7L2793
7L2794
7L2795
7L2796
7L2797
7L2798
7L2799
7L2800
7L2801
7L2802
7L2803
7L2804
7L2805
7L2806
7L2807
7L2808
7L2809
7L2810
7L2811
7L2812
7L2813
7L2814
7L2815
7L2816
7L2817
7L2818
7L2819
7L2820
7L2821
7L2822
7L2823
7L2824
7L2825
7L2826
7L2827
7L2828
7L2829
7L2830
7L2831
7L2832
7L2833
7L2834
7L2835
7L2836
7L2837
7L2838
7L2839
7L2840
7L2841
7L2842
7L2843
7L2844
7L2845
7L2846
7L2847
7L2848
7L2849
7L2850
7L2851
7L2852
7L2853
7L2854
7L2855
7L2856
7L2857
7L2858
7L2859
7L2860
7L2861
7L2862
7L2863
7L2864
7L2865
7L2866
7L2867
7L2868
7L2869
7L2870
7L2871
7L2872
7L2873
7L2874
7L2875
7L2876
7L2877
7L2878
7L2879
7L2880
7L2881
7L2882
7L2883
7L2884
7L2885
7L2886
7L2887
7L2888
7L2889
7L2890
7L2891
7L2892
7L2893
7L2894
7L2895
7L2896
7L2897
7L2898
7L2899
7L2900
7L2901
7L2902
7L2903
7L2904
7L2905
7L2906
7L2907
7L2908
7L2909
7L2910
7L2911
7L2912
7L2913
7L2914
7L2915
7L2916
7L2917
7L2918
7L2919
7L2920
7L2921
7L2922
7L2923
7L2924
7L2925
7L2926
7L2927
7L2928
7L2929
7L2930
7L2931
7L2932
7L2933
7L2934
7L2935
7L2936
7L2937
7L2938
7L2939
7L2940
7L2941
7L2942
7L2943
7L2944
7L2945
7L2946
7L2947
7L2948
7L2949
7L2950
7L2951
7L2952
7L2953
7L2954
7L2955
7L2956
7L2957
7L2958
7L2959
7L2960
7L2961
7L2962
7L2963
7L2964
7L2965
7L2966
7L2967
7L2968
7L2969
7L2970
7L2971
7L2972
7L2973
7L2974
7L2975
7L2976
7L2977
7L2978
7L2979
7L2980
7L2981
7L2982
7L2983
7L2984
7L2985
7L2986
7L2987
7L2988
7L2989
7L2990
7L2991
7L2992
7L2993
7L2994
7L2995
7L2996
7L2997
7L2998
7L2999
7L3000
7L3001
7L3002
7L3003
7L3004
7L3005
7L3006
7L3007
7L3008
7L3009
7L3010
7L3011
7L3012
7L3013
7L3014
7L3015
7L3016
7L3017
7L3018
7L3019
7L3020
7L3021
7L3022
7L3023
7L3024
7L3025
7L3026
7L3027
7L3028
7L3029
7L3030
7L3031
7L3032
7L3033
7L3034
7L3035
7L3036
7L3037
7L3038
7L3039
7L3040
7L3041
7L3042
7L3043
7L3044
7L3045
7L3046
7L3047
7L3048
7L3049
7L3050
7L3051
7L3052
7L3053
7L3054
7L3055
7L3056
7L3057
7L3058
7L3059
7L3060
7L3061
7L3062
7L3063
7L3064
7L3065
7L3066
7L3067
7L3068
7L3069
7L3070
7L3071
7L3072
7L3073
7L3074
7L3075
7L3076
7L3077
7L3078
7L3079
7L3080
7L3081
7L3082
7L3083
7L3084
7L3085
7L3086
7L3087
7L3088
7L3089
7L3090
7L3091
7L3092
7L3093
7L3094
7L3095
7L3096
7L3097
7L3098
7L3099
7L3100
7L3101
7L3102
7L3103
7L3104
7L3105
7L3106
7L3107
7L3108
7L3109
7L3110
7L3111
7L3112
7L3113
7L3114
7L3115
7L3116
7L3117
7L3118
7L3119
7L3120
7L3121
7L3122
7L3123
7L3124
7L3125
7L3126
7L3127
7L3128
7L3129
7L3130
7L3131
7L3132
7L3133
7L3134
7L3135
7L3136
7L3137
7L3138
7L3139
7L3140
7L3141
7L3142
7L3143
7L3144
7L3145
7L3146
7L3147
7L3148
7L3149
7L3150
7L3151
7L3152
7L3153
7L3154
7L3155
7L3156
7L3157
7L3158
7L3159
7L3160
7L3161
7L3162
7L3163
7L3164
7L3165
7L3166
7L3167
7L3168
7L3169
7L3170
7L3171
7L3172
7L3173
7L3174
7L3175
7L3176
7L3177
7L3178
7L3179
7L3180
7L3181
7L3182
7L3183
7L3184
7L3185
7L3186
7L3187
7L3188
7L3189
7L3190
7L3191
7L3192
7L3193
7L3194
7L3195
7L3196
7L3197
7L3198
7L3199
7L3200
7L3201
7L3202
7L3203
7L3204
7L3205
7L3206
7L3207
7L3208
7L3209
7L3210
7L3211
7L3212
7L3213
7L3214
7L3215
7L3216
7L3217
7L3218
7L3219
7L3220
7L3221
7L3222
7L3223
7L3224
7L3225
7L3226
7L3227
7L3228
7L3229
7L3230
7L3231
7L3232
7L3233
7L3234
7L3235
7L3236
7L3237
7L3238
7L3239
7L3240
7L3241
7L3242
7L3243
7L3244
7L3245
7L3246
7L3247
7L3248
7L3249
7L3250
7L3251
7L3252
7L3253
7L3254
7L3255
7L3256
7L3257
7L3258
7L3259
7L3260
7L3261
7L3262
7L3263
7L3264
7L3265
7L3266
7L3267
7L3268
7L3269
7L3270
7L3271
7L3272
7L3273
7L3274
7L3275
7L3276
7L3277
7L3278
7L3279
7L3280
7L3281
7L3282
7L3283
7L3284
7L3285
7L3286
7L3287
7L3288
7L3289
7L3290
7L3291
7L3292
7L3293
7L3294
7L3295
7L3296
7L3297
7L3298
7L3299
7L3300
7L3301
7L3302
7L3303
7L3304
7L3305
7L3306
7L3307
7L3308
7L3309
7L3310
7L3311
7L3312
7L3313
7L3314
7L3315
7L3316
7L3317
7L3318
7L3319
7L3320
7L3321
7L3322
7L3323
7L3324
7L3325
7L3326
7L3327
7L3328
7L3329
7L3330
7L3331
7L3332
7L3333
7L3334
7L3335
7L3336
7L3337
7L3338
7L3339
7L3340
7L3341
7L3342
7L3343
7L3344
7L3345
7L3346
7L3347
7L3348
7L3349
7L3350
7L3351
7L3352
7L3353
7L3354
7L3355
7L3356
7L3357
7L3358
7L3359
7L3360
7L3361
7L3362
7L3363
7L3364
7L3365
7L3366
7L3367
7L3368
7L3369
7L3370
7L3371
7L3372
7L3373
7L3374
7L3375
7L3376
7L3377
7L3378
7L3379
7L3380
7L3381
7L3382
7L3383
7L3384
7L3385
7L3386
7L3387
7L3388
7L3389
7L3390
7L3391
7L3392
7L3393
7L3394
7L3395
7L3396
7L3397
7L3398
7L3399
7L3400
7L3401
7L3402
7L3403
7L3404
7L3405
7L3406
7L3407
7L3408
7L3409
7L3410
7L3411
7L3412
7L3413
7L3414
7L3415
7L3416
7L3417
7L3418
7L3419
7L3420
7L3421
7L3422
7L3423
7L3424
7L3425
7L3426
7L3427
7L3428
7L3429
7L3430
7L3431
7L3432
7L3433
7L3434
7L3435
7L3436
7L3437
7L3438
7L3439
7L3440
7L3441
7L3442
7L3443
7L3444
7L3445
7L3446
7L3447
7L3448
7L3449
7L3450
7L3451
7L3452
7L3453
7L3454
7L3455
7L3456
7L3457
7L3458
7L3459
7L3460
7L3461
7L3462
7L3463
7L3464
7L3465
7L3466
7L3467
7L3468
7L3469
7L3470
7L3471
7L3472
7L3473
7L3474
7L3475
7L3476
7L3477
7L3478
7L3479
7L3480
7L3481
7L3482
7L3483
7L3484
7L3485
7L3486
7L3487
7L3488
7L3489
7L3490
7L3491
7L3492
7L3493
7L3494
7L3495
7L3496
7L3497
7L3498
7L3499
7L3500
7L3501
7L3502
7L3503
7L3504
7L3505
7L3506
7L3507
7L3508
7L3509
7L3510
7L3511
7L3512
7L3513
7L3514
7L3515
7L3516
7L3517
7L3518
7L3519
7L3520
7L3521
7L3522
7L3523
7L3524
7L3525
7L3526
7L3527
7L3528
7L3529
7L3530
7L3531
7L3532
7L3533
7L3534
7L3535
7L3536
7L3537
7L3538
7L3539
7L3540
7L3541
7L3542
7L3543
7L3544
7L3545
7L3546
7L3547
7L3548
7L3549
7L3550
7L3551
7L3552
7L3553
7L3554
7L3555
7L3556
7L3557
7L3558
7L3559
7L3560
7L3561
7L3562
7L3563
7L3564
7L3565
7L3566
7L3567
7L3568
7L3569
7L3570
7L3571
7L3572
7L3573
7L3574
7L3575
7L3576
7L3577
7L3578
7L3579
7L3580
7L3581
7L3582
7L3583
7L3584
7L3585
7L3586
7L3587
7L3588
7L3589
7L3590
7L3591
7L3592
7L3593
7L3594
7L3595
7L3596
7L3597
7L3598
7L3599
7L3600
7L3601
7L3602
7L3603
7L3604
7L3605
7L3606
7L3607
7L3608
7L3609
7L3610
7L3611
7L3612
7L3613
7L3614
7L3615
7L3616
7L3617
7L3618
7L3619
7L3620
7L3621
7L3622
7L3623
7L3624
7L3625
7L3626
7L3627
7L3628
7L3629
7L3630
7L3631
7L3632
7L3633
7L3634
7L3635
7L3636
7L3637
7L3638
7L3639
7L3640
7L3641
7L3642
7L3643
7L3644
7L3645
7L3646
7L3647
7L3648
7L3649
7L3650
7L3651
7L3652
7L3653
7L3654
7L3655
7L3656
7L3657
7L3658
7L3659
7L3660
7L3661
7L3662
7L3663
7L3664
7L3665
7L3666
7L3667
7L3668
7L3669
7L3670
7L3671
7L3672
7L3673
7L3674
7L3675
7L3676
7L3677
7L3678
7L3679
7L3680
7L3681
7L3682
7L3683
7L3684
7L3685
7L3686
7L3687
7L3688
7L3689
7L3690
7L3691
7L3692
7L3693
7L3694
7L3695
7L3696
7L3697
7L3698
7L3699
7L3700
7L3701
7L3702
7L3703
7L3704
7L3705
7L3706
7L3707
7L3708

Figure A2-43: 2019 Summer Peak Pre-Project Case B - Contingency of 395ST1 (North Holden 395S Transformer T1)

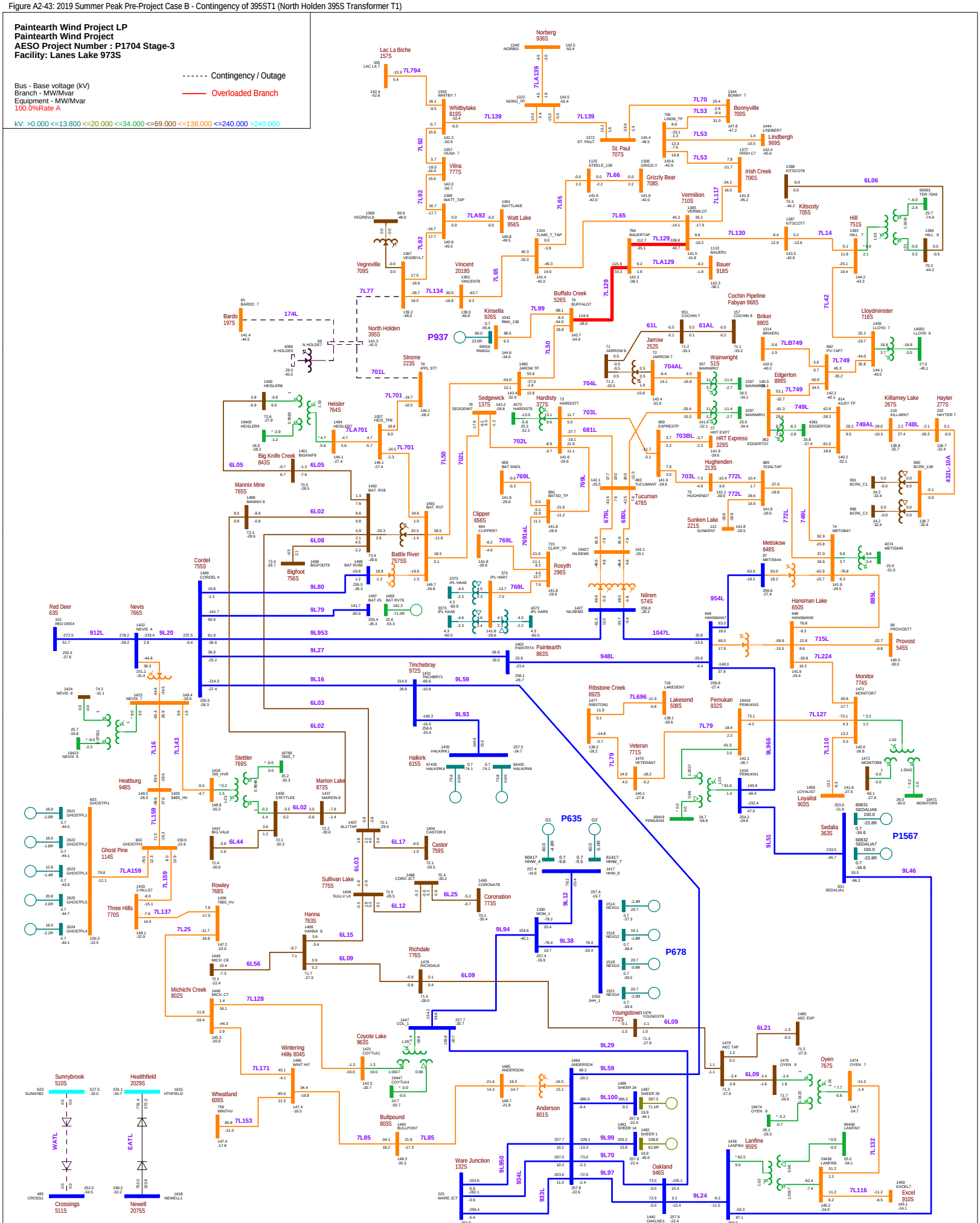

Figure A2-44: 2019 Summer Peak Pre-Project Case B - Contingency of 7L701\7LA701\701L (Battle River 757S - Heisler 764S - Strome 223S)

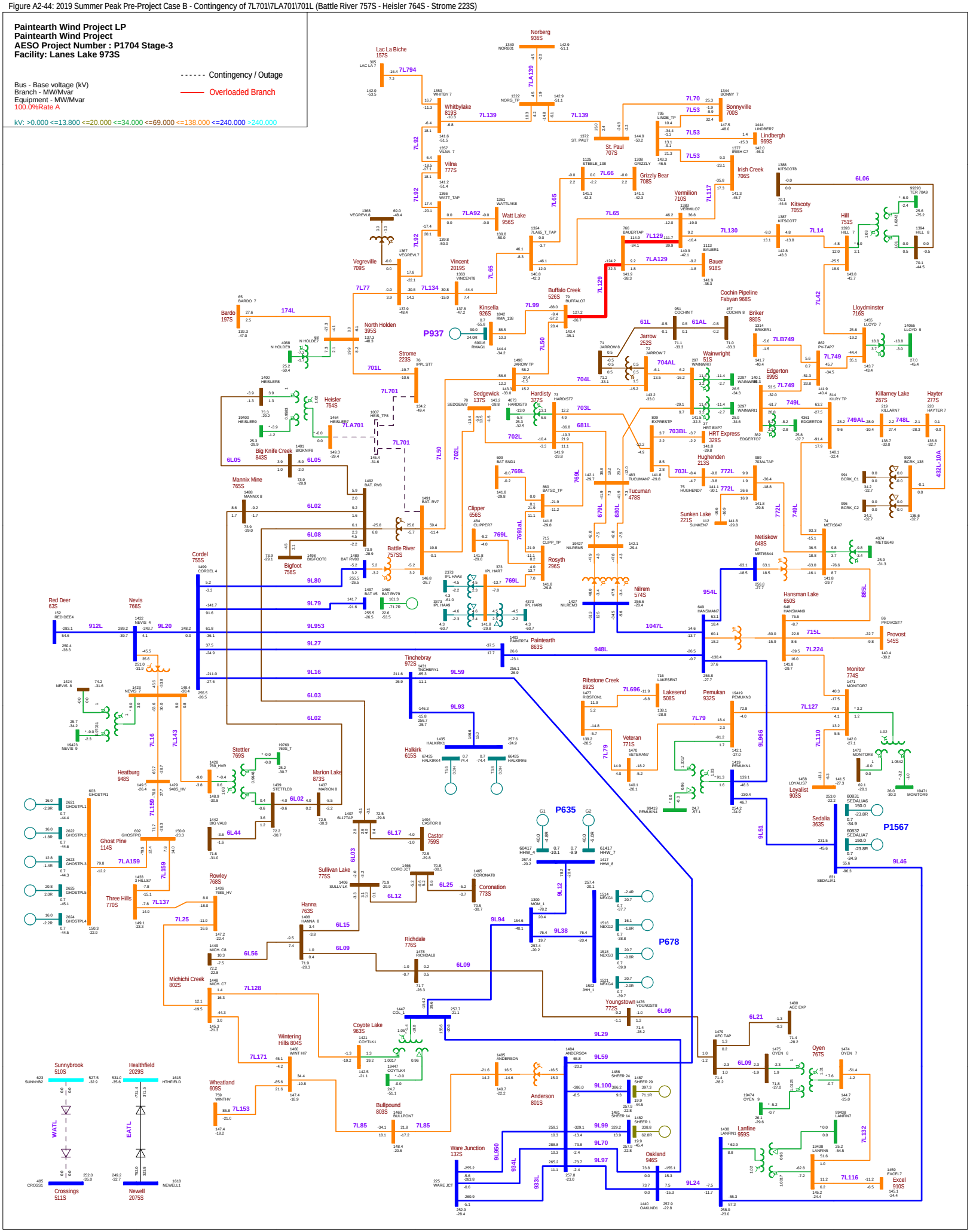

Figure A2-45: 2019 Summer Peak Pre-Project Case B - Contingency of 701L (North Holden 395S - Strome 223S)

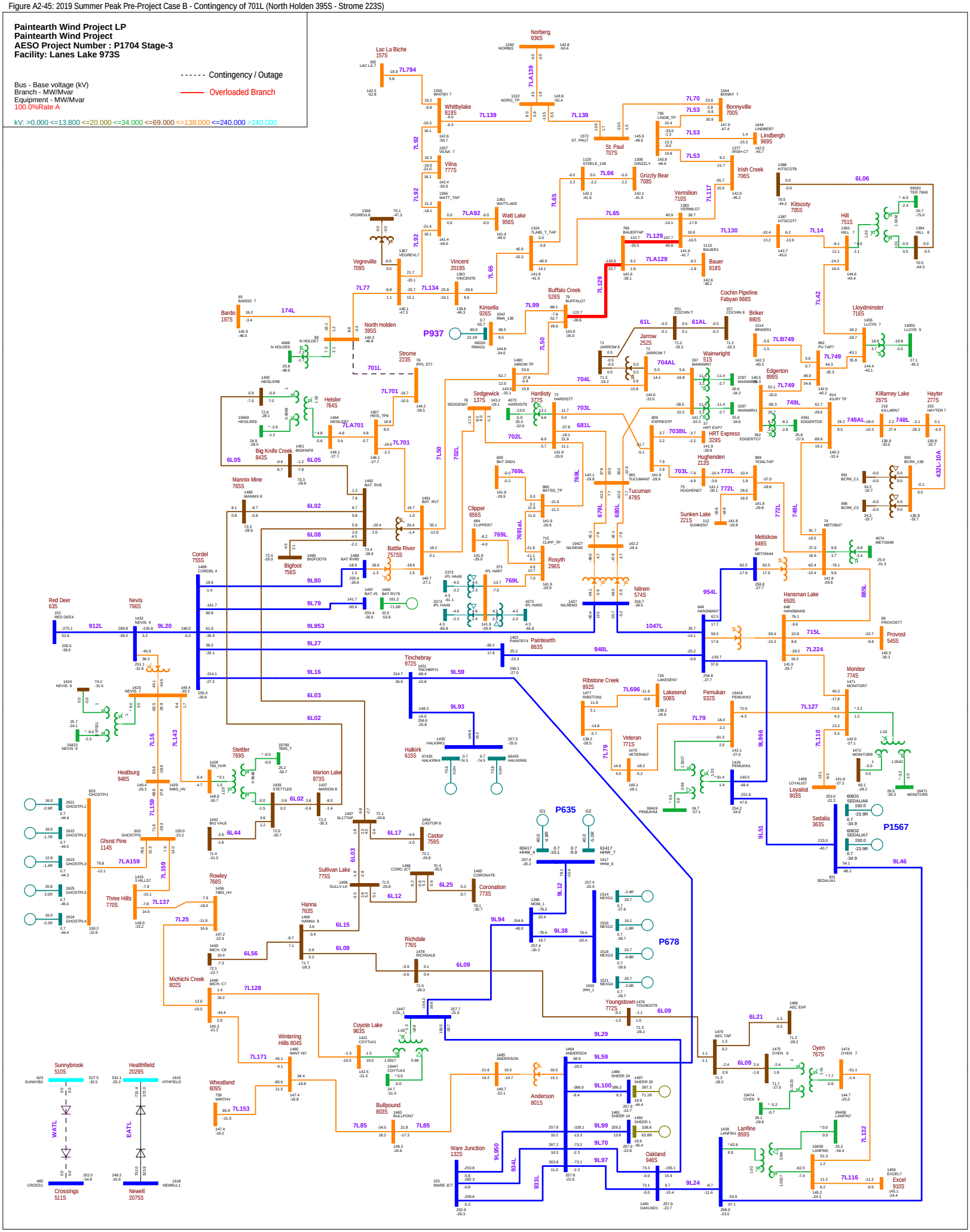

Figure A2-46: 2019 Winter Peak Pre-Project Case A - N-0 (System Normal Condition)

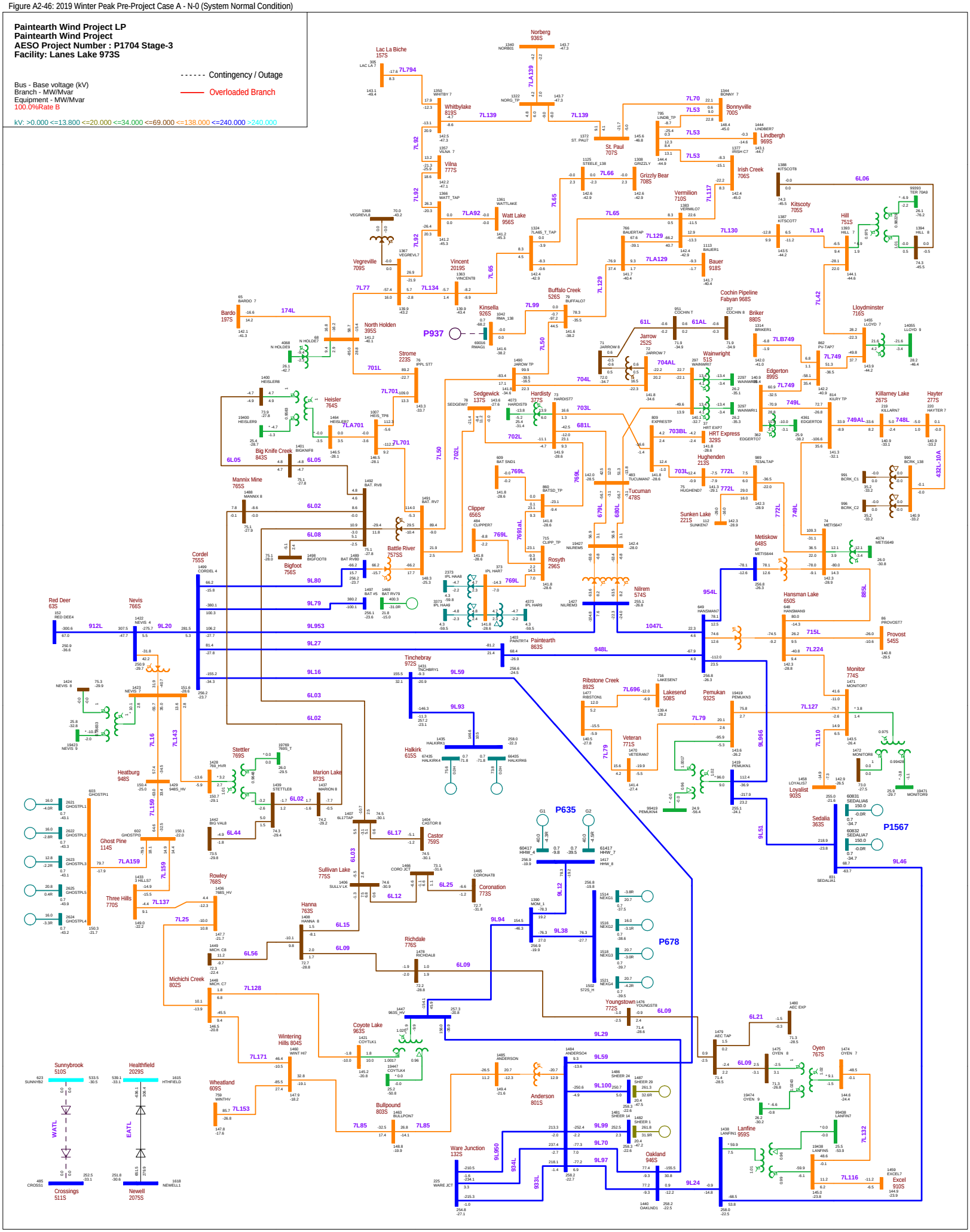

Figure A2-47: 2019 Winter Peak Pre-Project Case A - Contingency of 9L20 (Nevis 766S - Cordel 755S)

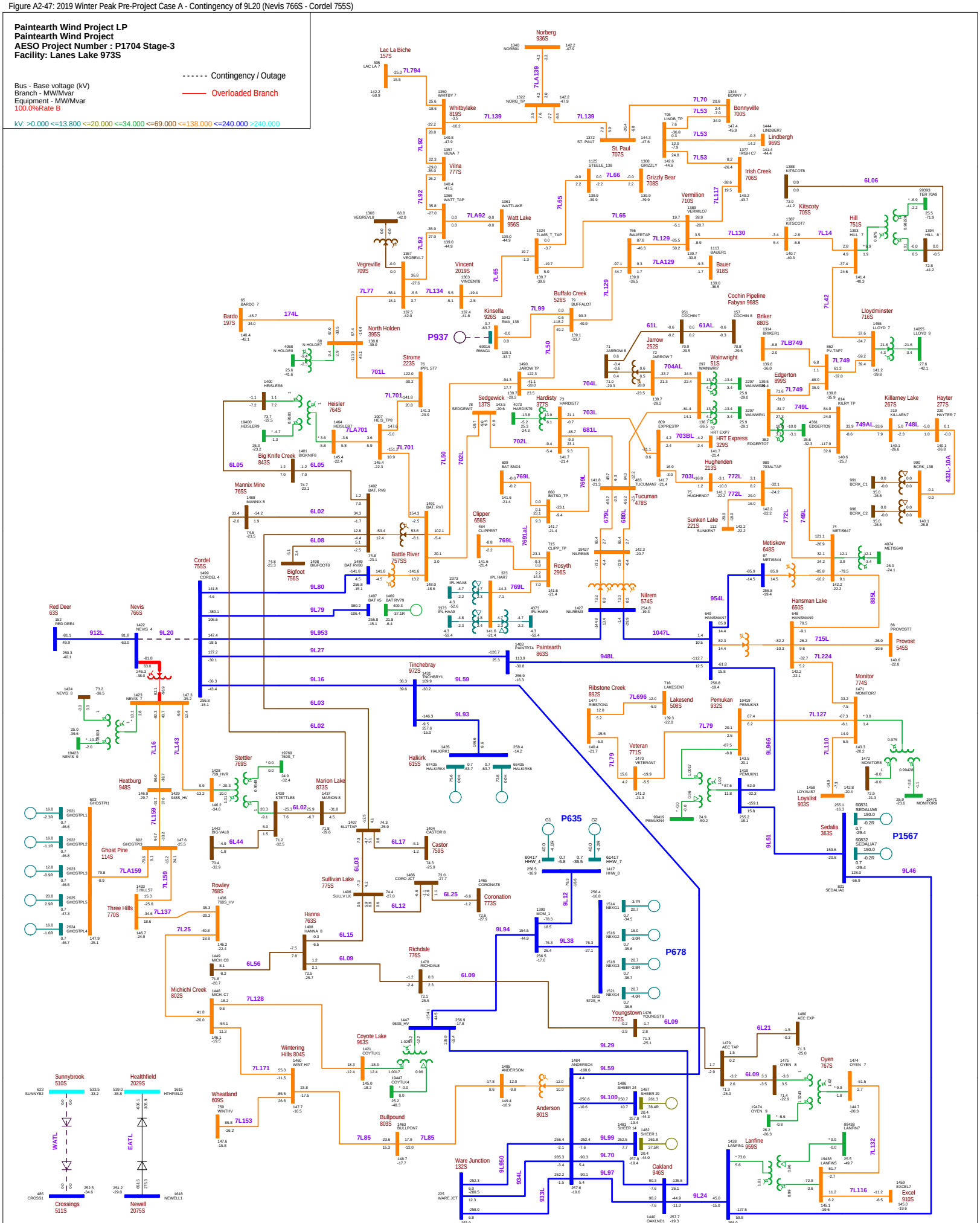

Figure A2-48: 2019 Winter Peak Pre-Project Case A - Contingency of 7L50 (Battle River 757S - Jarrow 252S - Buffalo Creek 526S)

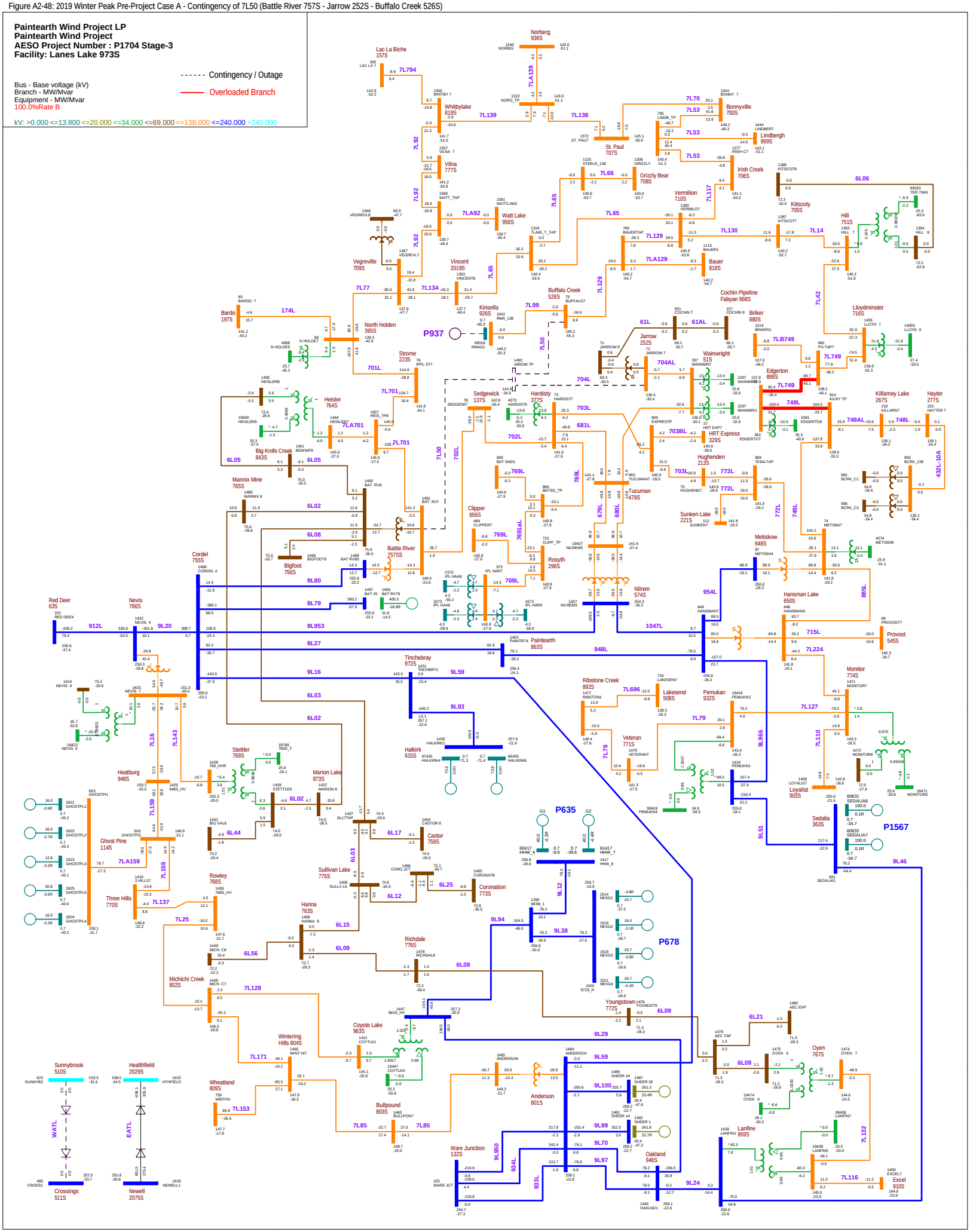
Paintearth Wind Project LP
Paintearth Wind Project
AESO Project Number : P1704 Stage-3
Facility: Lanes Lake 973S
Contingency / Outage
Overloaded Branch
Bus - Base voltage (kV)
Branch - MW/Mvar
Equipment - MW/Mvar
100.0%Rate B
kV: >0.000 <=13.800 <=20.000 <=34.000 <=69.000 <=138.000 <=240.000 >240.000
Norberg 936S
Lac La Biche 157S
Whitbylake 819S
Vilna 777S
Vegreville 709S
Vincent 2019S
Watt Lake 956S
St. Paul 707S
Grizzly Bear 708S
Vermilion 710S
Irish Creek 706S
Bonnyville 700S
Lindbergh 969S
Kitscoty 705S
Hill 751S
Bauer 918S
Buffalo Creek 526S
Kinsella 926S
Cochin Pipeline Fabyan 968S
Briker 880S
Lloydminster 716S
Bardo 197S
North Holden 395S
Strome 223S
Jarrow 252S
Wainwright 51S
Edgerton 899S
Killarney Lake 267S
Hayter 277S
Heisler 764S
Big Knife Creek 843S
Sedgewick 137S
Hardisty 377S
HRT Express 329S
Hughenden 213S
Mannix Mine 765S
Clipper 656S
Sunken Lake 221S
Tucuman 478S
Battle River 757SS
Bigfoot 756S
Rosyth 296S
Nilrem 574S
Metiskow 648S
Hansman Lake 650S
Provost 545S
Cordel 755S
Red Deer 63S
Nevis 766S
Paintearth 863S
Tinchebray 972S
Ribstone Creek 892S
Lakesend 508S
Pemukan 932S
Monitor 774S
Veteran 771S
Halkirk 615S
Heatburg 948S
Stettler 769S
Marion Lake 873S
Ghost Pine 114S
Three Hills 770S
Rowley 768S
Sullivan Lake 775S
Hanna 763S
Coronation 773S
Castor 759S
Richdale 776S
Michichi Creek 802S
Youngstown 772S
Sedalia 363S
Loyalist 903S
Oyen 767S
Lanfine 959S
Excel 910S
Coyote Lake 963S
Wintering Hills 804S
Wheatland 609S
Bullpound 803S
Anderson 801S
Ware Junction 132S
Oakland 946S
Sunnybrook 510S
Healthfield 2029S
Crossings 511S
Newell 2075S
P937
P635
P678
P1567
7L794
7LA139
7L139
7L70
7L53
7L92
7LA92
7L65
7L117
7L130
7L14
6L06
7L77
7L134
7L66
7LA129
7L129
7L99
7L50
7L42
7L749
7LB749
7LA701
7L701
6L05
6L02
6L08
6L80
6L79
9L953
9L27
9L16
9L59
9L93
6L03
6L17
6L12
6L25
6L15
6L09
9L94
9L38
9L12
9L29
9L59
9L100
9L99
9L70
9L97
9L24
9L950
934L
933L
7L171
7L153
7L85
7L128
7L25
7L137
7L159
7LA159
7L143
7L16
7L110
7L127
7L79
7L696
7L224
7L715
7L116
7L132
6L21
6L56
6L44
6L02
6L03
6L09
6L12
6L25
6L15
6L17
6L09
6L09
6L09

Figure A2-49: 2019 Winter Peak Pre-Project Case A - Contingency of 9L29 (Oakland 946S - Coyote Lake 963S)

Paintearth Wind Project LP
Paintearth Wind Project
AESO Project Number : P1704 Stage-3
Facility: Lanes Lake 973S

Contingency / Outage
Overloaded Branch

Bus - Base voltage (kV)
Branch - MW/Mvar
Equipment - MW/Mvar
100.0%Rate B

kV: >0.000 <=13.800 <=20.000 <=34.000 <=69.000 <=138.000 <=240.000 >240.000

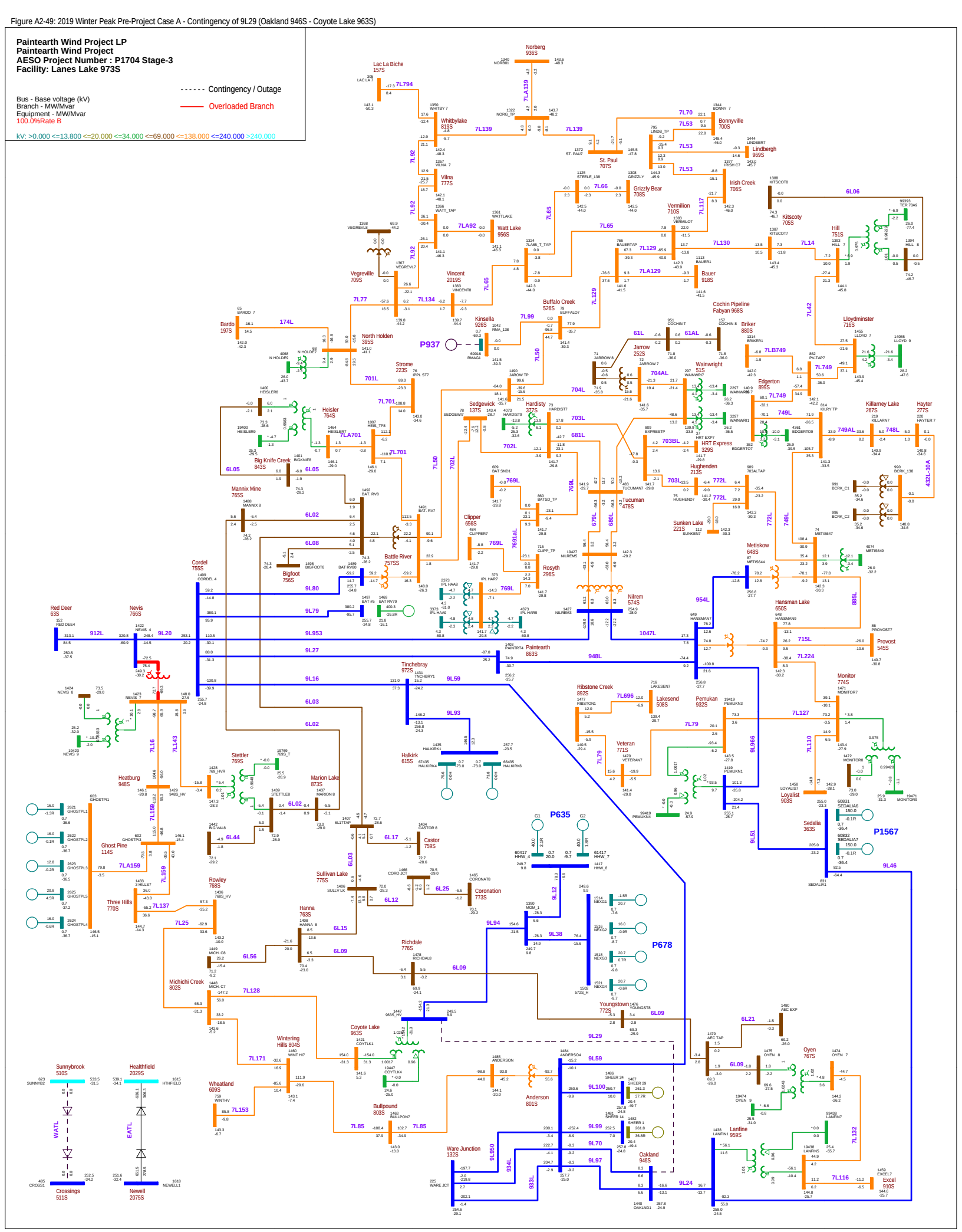

Figure A2-50: 2019 Winter Peak Pre-Project Case A - Contingency of 749L\749AL (Metiskow 648S - Edgerton 899S)

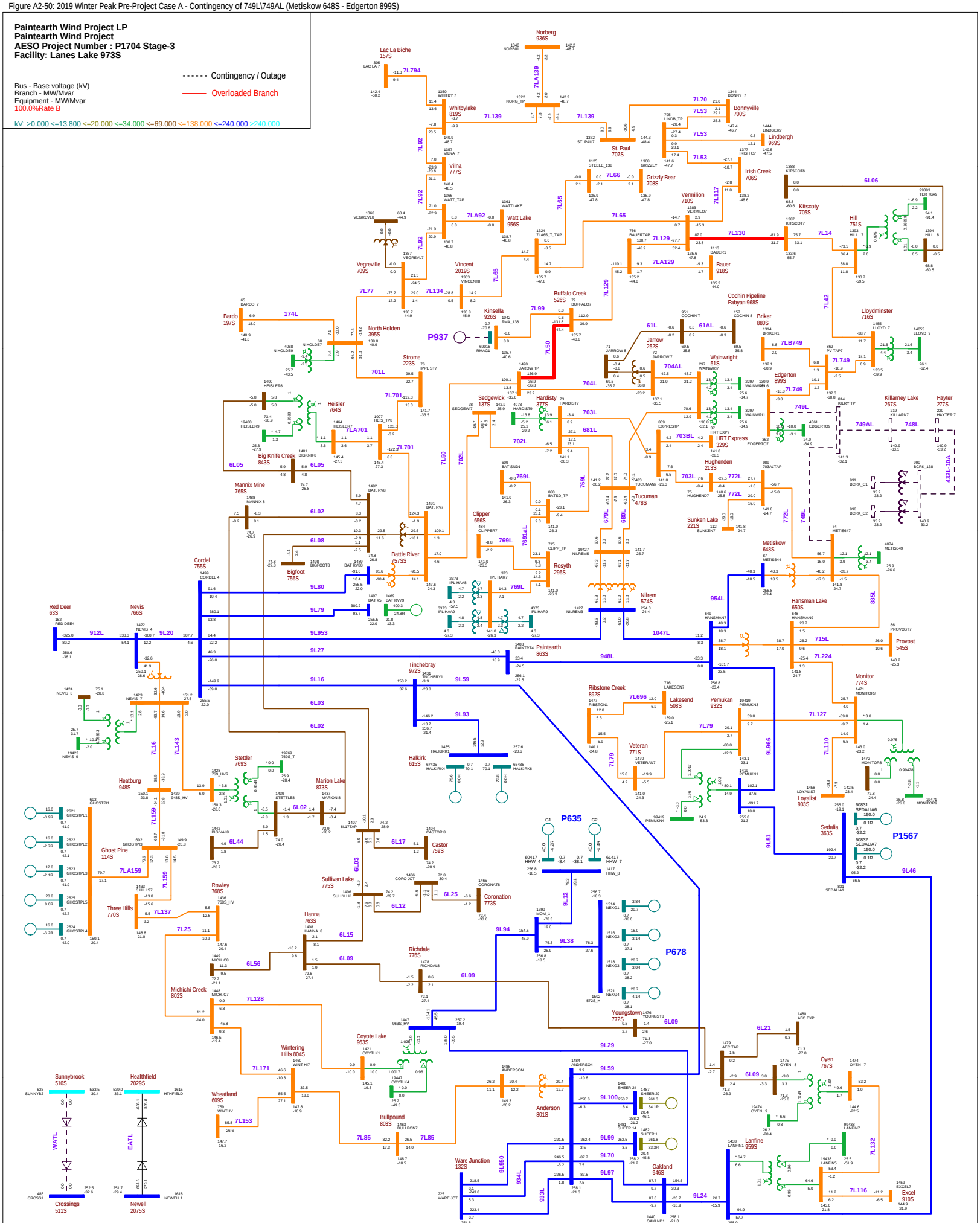
Paintearth Wind Project LP
Paintearth Wind Project
AESO Project Number : P1704 Stage-3
Facility: Lanes Lake 973S
Contingency / Outage
Overloaded Branch
Bus - Base voltage (kV)
Branch - MW/Mvar
Equipment - MW/Mvar
100.0%Rate B
kV: >0.000 <=13.800 <=20.000 <=34.000 <=69.000 <=138.000 <=240.000 >240.000
Norberg 936S
Lac La Biche 157S
Whitbylake 819S
Vilna 777S
Watt Lake 956S
Vegreville 709S
Vincent 2019S
Kinsella 926S
Buffalo Creek 526S
St. Paul 707S
Bonnyville 700S
Lindbergh 969S
Irish Creek 706S
Kitscoty 705S
Grizzly Bear 708S
Vermilion 710S
Bauer 918S
Hill 751S
Lloydminster 716S
Cochin Pipeline
Fabyan 968S
Briker 880S
Jarrow 252S
Wainwright 51S
Edgerton 899S
HRT Express 329S
Killarney Lake 267S
Hayter 277S
Bardo 197S
North Holden 395S
Strome 223S
Heisler 764S
Big Knife Creek 843S
Sedgewick 137S
Hardisty 377S
Tucuman 478S
Hughenden 213S
Sunken Lake 221S
Mannix 765S
Clipper 656S
Rosyth 296S
Battle River 757SS
Bigfoot 756S
Cordel 755S
Nilrem 574S
Metiskow 648S
Hansman Lake 650S
Provost 545S
Red Deer 63S
Nevis 766S
Paintearth 863S
Tinchebray 972S
Ribstone Creek 892S
Lakesend 508S
Pemukan 932S
Monitor 774S
Veteran 771S
Loyalist 903S
Sedalia 363S
Halkirk 615S
Stettler 769S
Heatburg 948S
Marion Lake 873S
Ghost Pine 114S
Three Hills 770S
Rowley 768S
Hanna 763S
Sullivan Lake 775S
Coronation 773S
Castor 759S
Richdale 776S
Michichi Creek 802S
Youngstown 772S
Oyen 767S
Lanfine 959S
Sunnybrook 510S
Healthfield 2029S
Crossings 511S
Newell 2075S
Wheatland 609S
Wintering Hills 804S
Coyote Lake 963S
Bullpound 803S
Anderson 801S
Ware Junction 132S
Oakland 946S
Excel 910S
P937
P635
P678
P1567
174L
701L
7L92
7L93
7L65
7L66
7L70
7L53
7L139
7L794
7L77
7L134
7L65
7L50
7L99
7L129
7L130
7L14
7L42
7L749
7L704
7L703
7L702
7L681
7L769
7L691
7L772
7L773
7L749L
7L748
7L749AL
7L701
7LA701
7LA92
7LA139
7LA129
7LA159
7L159
7L143
7L16
7L137
7L25
7L128
7L171
7L153
7L85
7L56
7L44
7L6
7L17
7L25
7L12
7L15
7L09
7L94
7L38
7L12
7L29
7L59
7L100
7L99
7L70
7L97
7L24
7L116
7L132
7L21
7L110
7L127
7L224
7L79
7L696
7L51
9L20
9L80
9L79
9L953
9L27
9L16
9L59
9L93
9L02
9L03
9L08
9L02
9L02
9L02

Figure A2-51: 2019 Winter Peak Pre-Project Case A - Contingency of 7L129\7LA129 (Buffalo Creek 526S - Vermilion 710S - Bauer 918S)

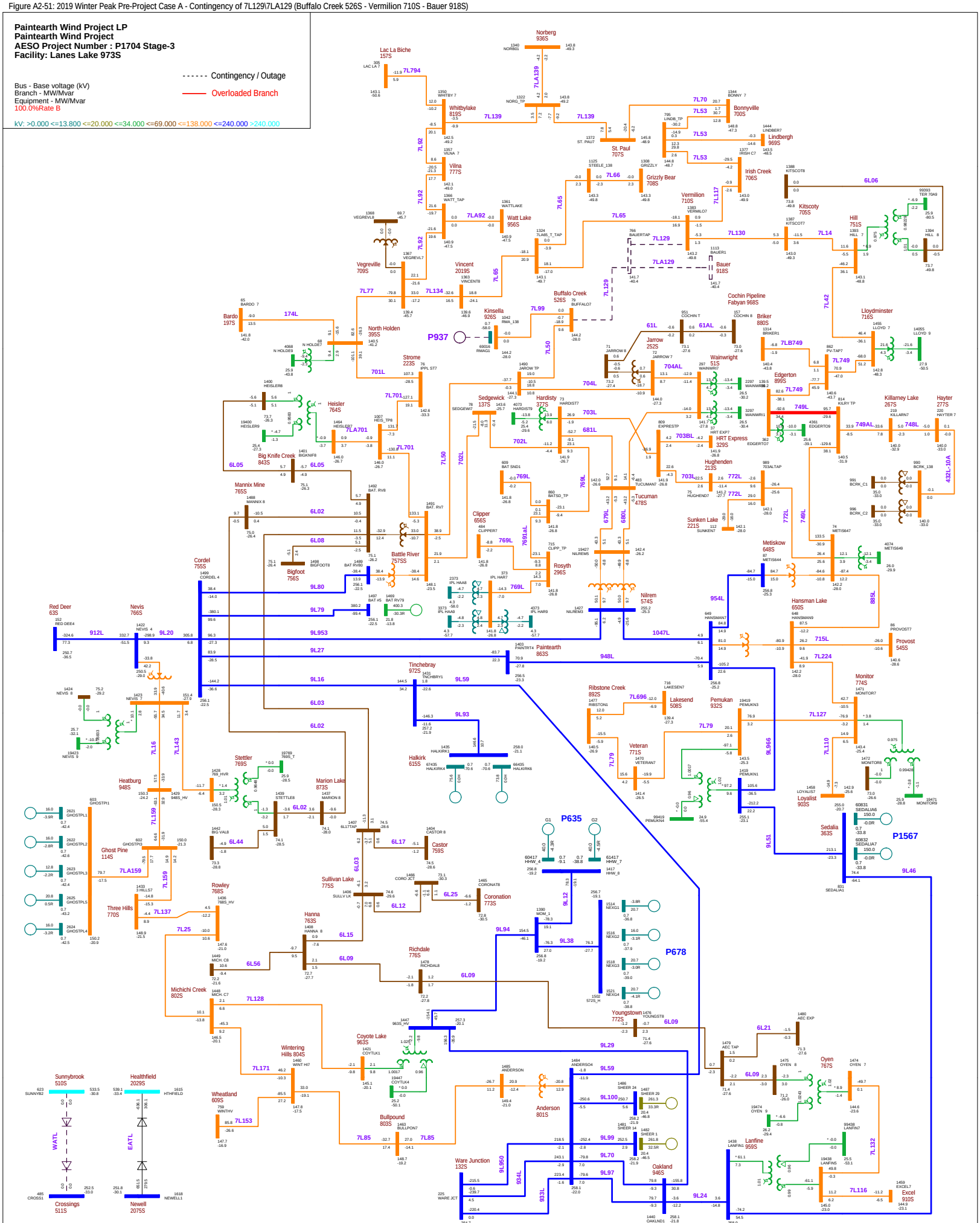
Paintearth Wind Project LP
Paintearth Wind Project
AESO Project Number : P1704 Stage-3
Facility: Lanes Lake 973S
Contingency / Outage
Overloaded Branch
Bus - Base voltage (kV)
Branch - MW/Mvar
Equipment - MW/Mvar
100.0%Rate B
kV: >0.000 <=13.800 <=20.000 <=34.000 <=69.000 <=138.000 <=240.000 >240.000
Norberg 936S
Lac La Biche 157S
Whitbylake 819S
Vilna 777S
Watt Lake 956S
Vegreville 709S
Vincent 2019S
Kinsella 926S
Buffalo Creek 526S
St. Paul 707S
Bonnyville 700S
Lindbergh 969S
Irish Creek 706S
Grizzly Bear 708S
Vermilion 710S
Bauer 918S
Kitscoty 705S
Hill 751S
Lloydminster 716S
Cochin Pipeline
Fabyan 968S
Briker 880S
Jarrow 252S
Wainwright 51S
Edgerton 899S
HRT Express 329S
Hughenden 213S
Killarney Lake 267S
Hayter 277S
Bardo 197S
North Holden 395S
P937
Strome 223S
Heisler 764S
Big Knife Creek 843S
Mannix Mine 765S
Cordel 755S
Bigfoot 756S
Battle River 757SS
Sedgewick 137S
Hardisty 377S
Clipper 656S
Rosyth 296S
Tucuman 478S
Sunken Lake 221S
Metiskow 648S
Hansman Lake 650S
Provost 545S
Nilrem 574S
Paintearth 863S
Red Deer 63S
Nevis 766S
Tinchebray 972S
Ribstone Creek 892S
Lakesend 508S
Pemukan 932S
Monitor 774S
Veteran 771S
Halkirk 615S
Stettler 769S
Heatburg 948S
Marion Lake 873S
Ghost Pine 114S
Three Hills 770S
Rowley 768S
Hanna 763S
Sullivan Lake 775S
Coronation 773S
Castor 759S
Richdale 776S
Michichi Creek 802S
Wintering Hills 804S
Coyote Lake 963S
Wheatland 609S
Bullpound 803S
Anderson 801S
Ware Junction 132S
Oakland 946S
Youngstown 772S
Oyen 767S
Lanfine 959S
Excel 910S
Sedalia 363S
Loyalist 903S
P635
P678
P1567
Sunnybrook 510S
Healthfield 2029S
Crossings 511S
Newell 2075S
WATL
EATL
Tucumán
Sunken Lake
Hughenden
Killarney Lake
Hayter
Lloydminster
Kitscoty
Irish Creek
Lindbergh
Bonnyville
St. Paul
Grizzly Bear
Vermilion
Bauer
Lanfine
Excel
Oyen
Sedalia
Loyalist
Monitor
Provost
Hansman Lake
Metiskow
Nilrem
Rosyth
Clipper
Battle River
Bigfoot
Cordel
Mannix Mine
Big Knife Creek
Heisler
Strome
North Holden
Vegreville
Vilna
Whitbylake
Lac La Biche
Norberg
Bardo
Red Deer
Nevis
Paintearth
Tinchebray
Ribstone Creek
Lakesend
Pemukan
Veteran
Halkirk
Stettler
Heatburg
Marion Lake
Ghost Pine
Three Hills
Rowley
Hanna
Sullivan Lake
Coronation
Castor
Richdale
Michichi Creek
Wintering Hills
Coyote Lake
Wheatland
Bullpound
Anderson
Ware Junction
Oakland
Youngstown
Oyen
Lanfine
Excel

Figure A2-52: 2019 Winter Peak Pre-Project Case A - Contingency of 526ST1 or 526ST2 (Buffalo Creek 526S Transformer T1 or T2)

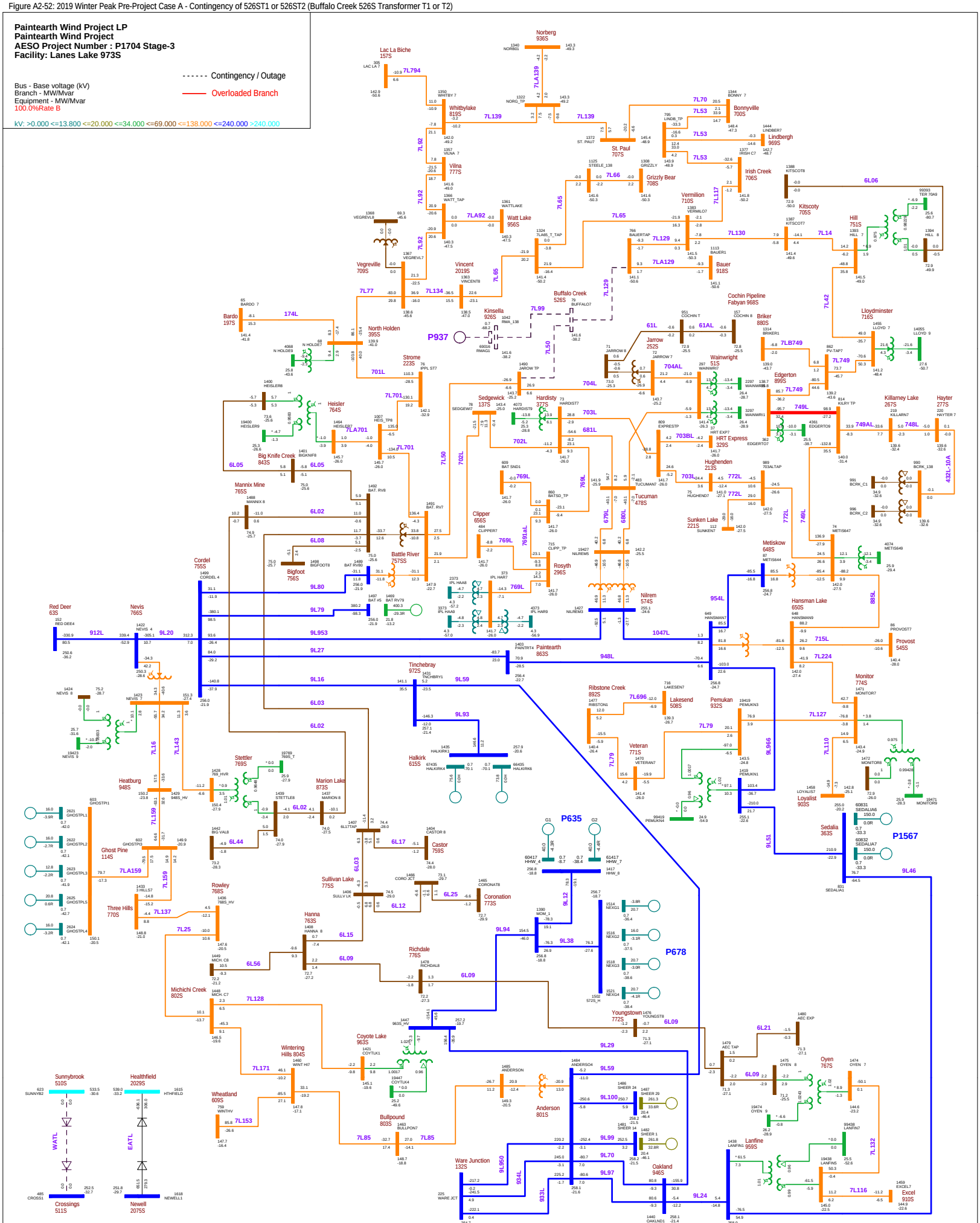

Figure A2-53: 2019 Winter Peak Pre-Project Case B - N-0 (System Normal Condition)

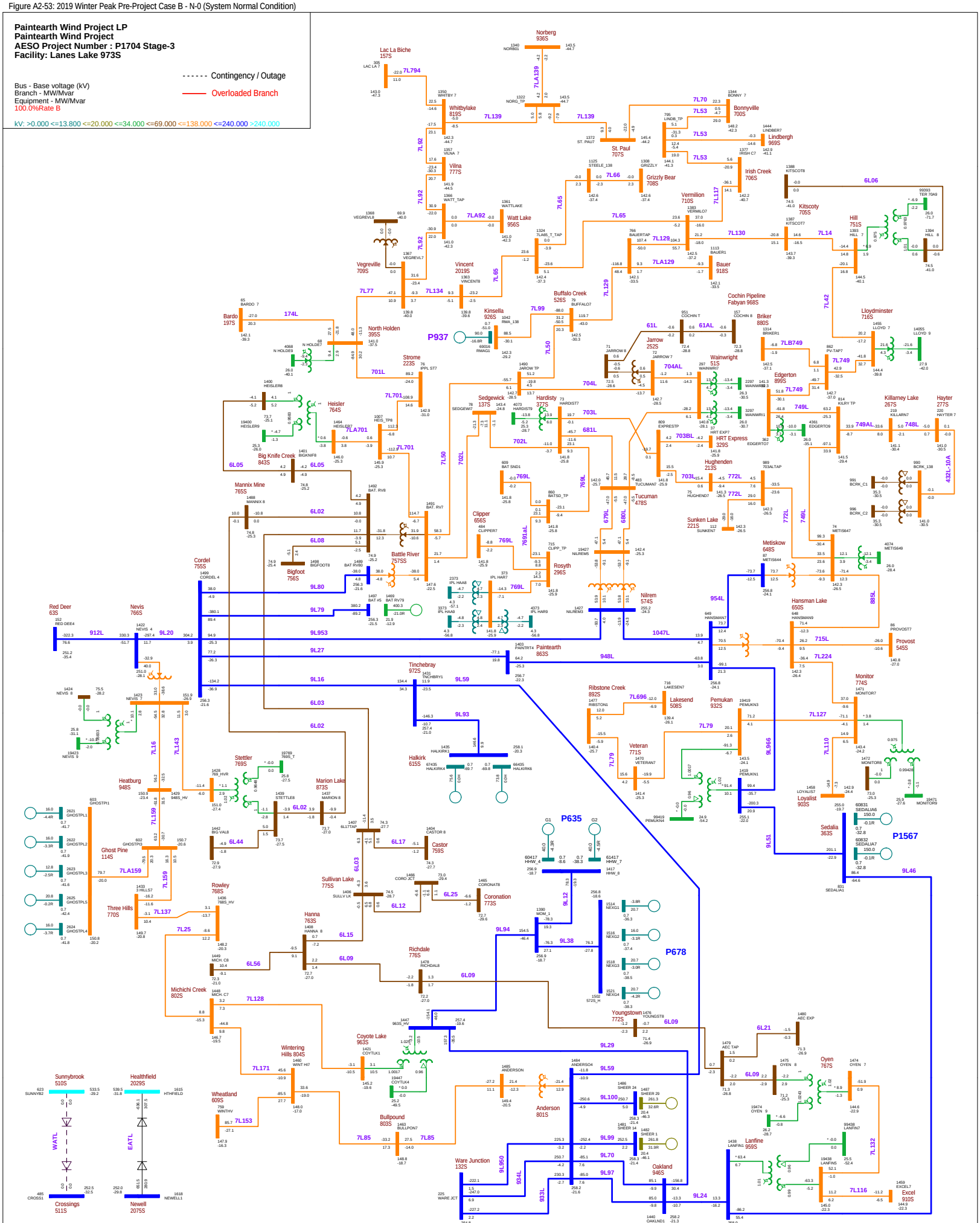

Figure A2-54: 2019 Winter Peak Pre-Project Case B - Contingency of 395ST1 (North Holden 395S Transformer T1)

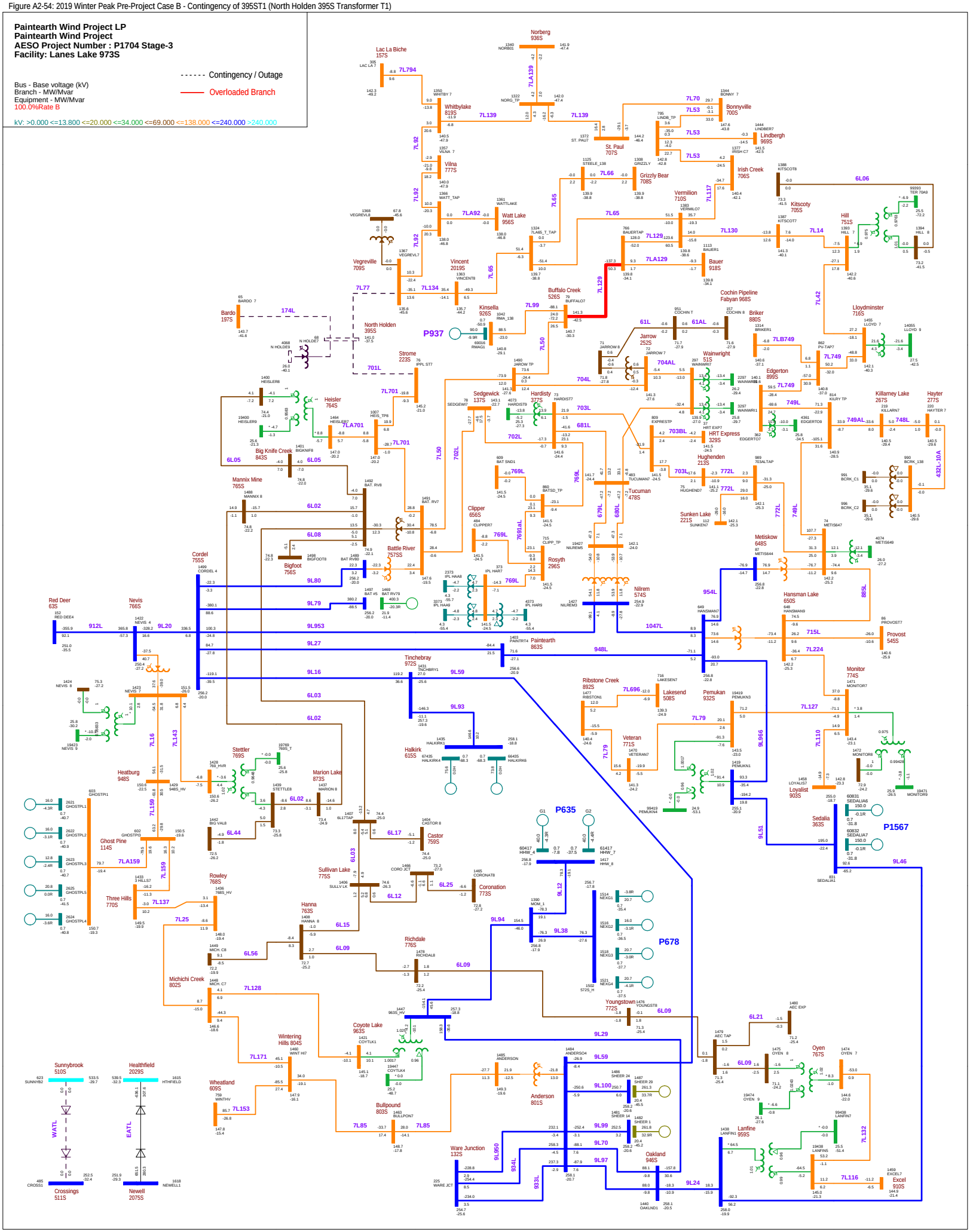

Figure A2-55: 2019 Winter Peak Pre-Project Case B - Contingency of 766S901T (Nevis 766S Transformer 901T)

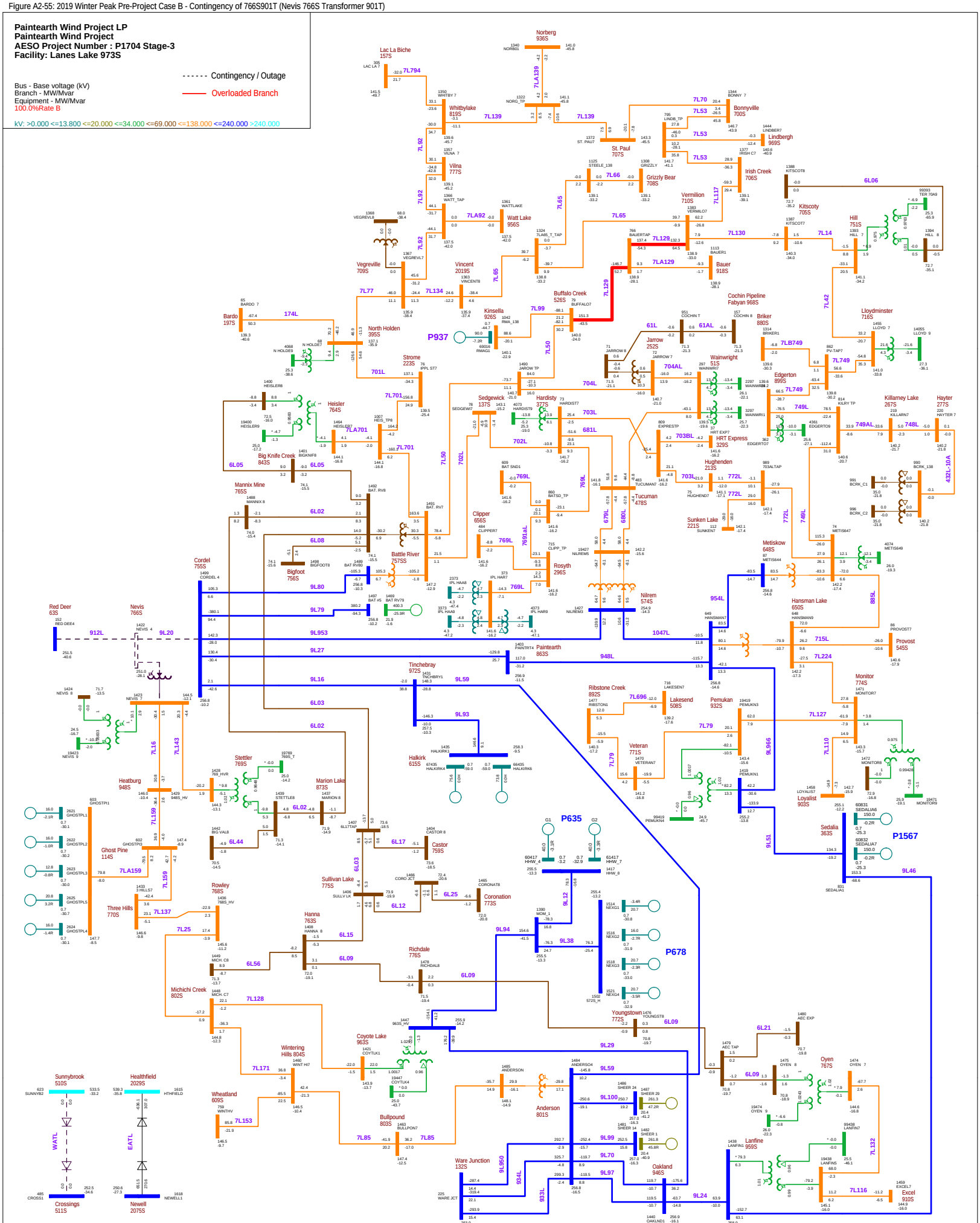
Paintearth Wind Project LP
Paintearth Wind Project
AESO Project Number : P1704 Stage-3
Facility: Lanes Lake 973S
Contingency / Outage
Overloaded Branch
Bus - Base voltage (kV)
Branch - MW/Mvar
Equipment - MW/Mvar
100.0%Rate B
kV: >0.000 <=13.800 <=20.000 <=34.000 <=69.000 <=138.000 <=240.000 >240.000
Norberg 936S
Lac La Biche 157S
Whitbylake 819S
Vilna 777S
Vegreville 709S
Vincent 2019S
Watt Lake 956S
St. Paul 707S
Grizzly Bear 708S
Vermilion 710S
Bonnyville 700S
Lindbergh 969S
Irish Creek 706S
Kitscoty 705S
Hill 751S
Lloydminster 716S
Bardo 197S
North Holden 395S
Strome 223S
Kinsella 926S
Buffalo Creek 526S
Cochin Pipeline
Fabyan 968S
Briker 880S
Jarrow 252S
Wainwright 51S
Edgerton 899S
Killarney Lake 267S
Hayter 277S
Heisler 764S
Big Knife Creek 843S
Sedgewick 137S
Hardisty 377S
HRT Express 329S
Hughenden 213S
Sunken Lake 221S
Mannix 765S
Clipper 656S
Tucumar 478S
Metiskow 648S
Cordel 755S
Battle River 757SS
Bigfoot 756S
Rosyth 296S
Nilrem 574S
Hansman Lake 650S
Provost 545S
Red Deer 63S
Nevis 766S
Tinchebray 972S
Paintearth 863S
Ribstone Creek 892S
Lakesend 508S
Pemukan 932S
Monitor 774S
Veteran 771S
Loyalist 903S
Sedalia 363S
Halkirk 615S
Stettler 769S
Heatburg 948S
Marion Lake 873S
Ghost Pine 114S
Three Hills 770S
Rowley 768S
Castor 759S
Sullivan Lake 775S
Coronation 773S
Hanna 763S
Richdale 776S
Michichi Creek 802S
Youngstown 772S
Oyen 767S
Lanfine 959S
Excel 910S
Sunnybrook 510S
Healthfield 2029S
Crossings 511S
Newell 2075S
Wheatland 609S
Wintering Hills 804S
Coyote Lake 963S
Bullpound 803S
Anderson 801S
Ware Junction 132S
Oakland 946S
P937
P635
P678
P1567
174L
701L
6L05
6L02
6L08
9L80
9L79
9L20
912L
9L953
9L27
9L16
6L03
9L59
9L93
6L17
6L44
6L02
6L25
6L12
6L15
6L09
6L56
7L128
7L171
7L153
7L85
9L94
9L38
9L12
9L29
9L59
9L100
9L99
9L70
9L97
9L24
9L950
934L
933L
7L25
7L137
7L159
7LA159
7L143
7L16
7L159
7L199
7L92
7L65
7L66
7L139
7LA139
7L70
7L53
7L117
7L130
7L14
7L129
7LA129
7L99
7L50
7L77
7L134
7LA92
7LA701
7L701
7L702
7L703
7L681
7L704
704AL
703BL
703AL
7L749
749L
748L
749AL
7L42
7L224
715L
7L127
7L110
7L79
7L696
7L116
7L132
6L21
6L09
6L06
6L14
61L
61AL
7LB749
954L
1047L
948L
885L
9L966
9L51
432L-10A
772L
769L
769AL
680L
679L
702L
7L50
7L65
7L92
7L139
7LA139
7LA701
7LA92
7LA129
7L65
7L129
7L117
7L42
7L749
7L704
7L703
7L681
7L702
7L701
7L50
7L99
7L77
7L134
7LA92
7LA701
7LA129
7L65
7L66
7L139
7L53
7L70
7L92
7L143
7L16
7L159
7LA159
7L137
7L25
7L159
7L199
6L44
6L02
6L03
6L17
6L12
6L15
6L09
6L56
7L128
7L171
7L153
7L85
9L94
9L38
9L12
9L29
9L59
9L100
9L99
9L70
9L97
9L24
9L950
934L
933L
6L25
6L09
6L21
6L06
6L14
61L
61AL
7LB749
7L749
749L
748L
749AL
7L42
7L224
715L
7L127
7L110
7L79
7L696
7L116
7L132
954L
1047L
948L
885L
9L966
9L51
432L-10A
772L
769L
769AL
680L
679L
702L
7L50
7L65
7L92
7L139
7LA139
7LA701
7LA92

Figure A2-56: 2019 Winter Peak Pre-Project Case B - Contingency of 749L\749AL (Metiskow 648S - Edgerton 899S)

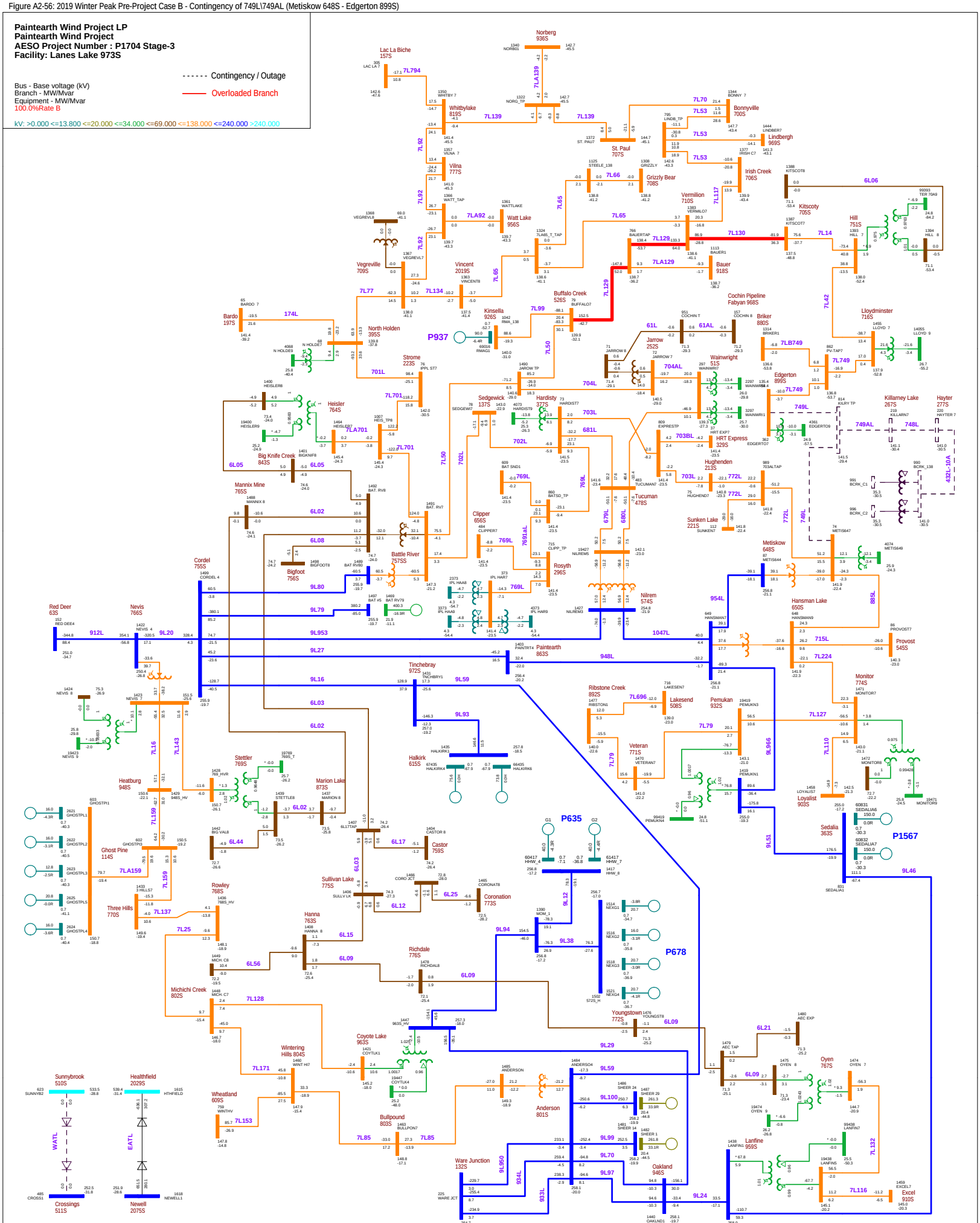
Paintearth Wind Project LP
Paintearth Wind Project
AESO Project Number : P1704 Stage-3
Facility: Lanes Lake 973S
Contingency / Outage
Overloaded Branch
Bus - Base voltage (kV)
Branch - MW/Mvar
Equipment - MW/Mvar
100.0%Rate B
kV: >0.000 <=13.800 <=20.000 <=34.000 <=69.000 <=138.000 <=240.000 >240.000
Norberg 936S
Lac La Biche 157S
Whitbylake 819S
Vilna 777S
Watt Lake 956S
Vegreville 709S
Vincent 2019S
Kinsella 926S
Buffalo Creek 526S
St. Paul 707S
Bonnyville 700S
Lindbergh 969S
Irish Creek 706S
Grizzly Bear 708S
Vermilion 710S
Kitscoty 705S
Hill 751S
Bauer 918S
Cochin Pipeline
Fabyan 968S
Briker 880S
Lloydminster 716S
Bardo 197S
North Holden 395S
Strome 223S
Jarrow 252S
Wainwright 51S
Edgerton 899S
Killarney Lake 267S
Hayter 277S
Heisler 764S
Big Knife Creek 843S
Sedgewick 137S
Hardisty 377S
HRT Express 329S
Hughenden 213S
Mannix Mine 765S
Cordel 755S
Battle River 757SS
Clipper 656S
Rosyth 296S
Tucuman 478S
Sunken Lake 221S
Metiskow 648S
Red Deer 63S
Nevis 766S
Bigfoot 756S
Nilrem 574S
Hansman Lake 650S
Provost 545S
Tinchebray 972S
Paintearth 863S
Ribstone Creek 892S
Lakesend 508S
Pemukan 932S
Monitor 774S
Heatburg 948S
Stettler 769S
Marion Lake 873S
Halkirk 615S
Veteran 771S
Loyalist 903S
Ghost Pine 114S
Three Hills 770S
Rowley 768S
Sullivan Lake 775S
Castor 759S
Coronation 773S
Hanna 763S
Richdale 776S
Sedalia 363S
Michichi Creek 802S
Youngstown 772S
Oyen 767S
Sunnybrook 510S
Healthfield 2029S
Wheatland 609S
Wintering Hills 804S
Coyote Lake 963S
Bullpound 803S
Anderson 801S
Ware Junction 132S
Oakland 946S
Lanfine 959S
Crossings 511S
Newell 2075S
Excel 910S
P937
P635
P678
P1567
174L
432L-10A
954L
885L
1047L
948L
715L
749L
749AL
748L
772L
769L
703L
704L
681L
702L
701L
7L92
7L65
7L129
7L130
7L14
7L42
7L50
7L99
7L77
7L134
7L65
7L117
7L70
7L53
7L139
7L794
7L739
7L749
7L704AL
7L703BL
7L61AL
7L61L
7L701A
7L701
7L92A
7L66
7L06
7L92
7L7B749
7L749
7L704
7L703
7L702
7L691AL
7L679L
7L680L
7L772L
7L749L
7L50
7L702L
7L769L
7L701
7L701A
6L05
6L02
6L08
6L80
6L79
6L03
6L16
6L143
6L159
6L137
6L25
6L56
6L09
6L15
6L12
6L17
6L44
6L02
6L03
6L159
7LA159
7L137
7L25
7L128
7L171
7L153
7L85
7L159
9L20
9L953
9L27
9L16
9L59
9L93
9L80
9L79
9L94
9L38
9L12
9L29
9L59
9L100
9L99
9L70
9L97
9L24
9L950
934L
933L
9L966
9L51
9L46
9L110
7L127
7L79
7L696
7L224
7L110
7L116
7L132
7L21
6L09
6L06
7LA139
7LA92
7LA129
7LA701
912L
1409 CORDEL 4
1422 NEVIS 4
1423 NEVIS 7
1424 NEVIS 8
1419 NEVIS 9
1428 769_HVR
1429 948S_HV
1439 STETTLE8
1437 MARION 8
1442 BIG VAL8
1433 3 HILLS7
1438 766S_HV
1449 MICH. C8
1468 MICH. C7
1460 WINT HI7
1447 963S_HV
1421 COYTLK1
19447 COYTLK4
1485 ANDERSON
1484 ANDERSON4
1486 SHEER 24
1487 SHEER 29
1481 SHEER 14
1482 SHEER 1
1438 LANFIN1
19438 LANFIN5
99438 LANFIN7
1459 EXCEL7
1440 OAKLND1
225 WARE JCT
1431 TINCHBRY1
1435 HALKIRK1
67435 HALKIRK4
66435 HALKIRK6
1403 PAINTRT4
60417 HHW_4
61417 HHW_7
1417 HHW_8
1500 572S_H
1514 NEXG1
1516 NEXG2
1518 NEXG3
1521 NEXG4
1476 YOUNGST8
1480 AEC EXP
1479 AEC TAP
1475 OYEN 8
19474 OYEN 5
1474 OYEN 7
1471 MONITOR7
1472 MONITOR8
19471 MONITOR9
1458 LOYALIS7
1439 PEMUKN1
19419 PEMUKN3
99419 PEMUKN4
1477 RIBSTON1
1470 VETERAN7
716 LAKESEN7
1466 CORO JCT
1465 CORONAT8
1406 SULLY LK
1408 HANNA 8
1478 RICHDAL8
1463 BULLPOND7
1460 WINT HI7
1459 EXCEL7
1440 OAKLND1
1438 LANFIN1
1439 PEMUKN1
1458 LOYALIS7
1472 MONITOR8
19471 MONITOR9
1475 OYEN 8
19474 OYEN 5
1474 OYEN 7
1480 AEC EXP
1479 AEC TAP
1476 YOUNGST8
1500 572S_H
1417 HHW_8
61417 HHW_7
60417 HHW_4
1403 PAINTRT4
1431 TINCHBRY1
1435 HALKIRK1
67435 HALKIRK4
66435 HALKIRK6
1466 CORO JCT
1465 CORONAT8
1406 SULLY LK
1408 HANNA 8
1478 RICHDAL8
1463 BULLPOND7
1460 WINT HI7
1447 963S_HV
1421 COYTLK1
19447 COYTLK4
1485 ANDERSON
1484 ANDERSON4
1486 SHEER 24
1487 SHEER 29
1481 SHEER 14
1482 SHEER 1
1438 LANFIN1
19438 LANFIN5
99438 LANFIN7
1459 EXCEL7
1440 OAKLND1
225 WARE JCT
1431 TINCHBRY1
1435 HALKIRK1
67435 HALKIRK4
66435 HALKIRK6
1403 PAINTRT4
60417 HHW_4
61417 HHW_7
1417 HHW_8
1500 572S_H
1514 NEXG1
1516 NEXG2
1518 NEXG3
1521 NEXG4
1476 YOUNGST8
1480 AEC EXP
1479 AEC TAP
1475 OYEN 8
19474 OYEN 5
1474 OYEN 7
1471 MONITOR7
1472 MONITOR8
19471 MONITOR9
1458 LOYALIS7
1439 PEMUKN1
19419 PEMUKN3
99419 PEMUKN4
1477 RIBSTON1
1470 VETERAN7
716 LAKESEN7

Figure A2-57: 2019 Winter Peak Pre-Project Case B - Contingency of 7L749\749L\7LB749 (Edgerton 899S - Briker 880S - Lloydminster 716S)

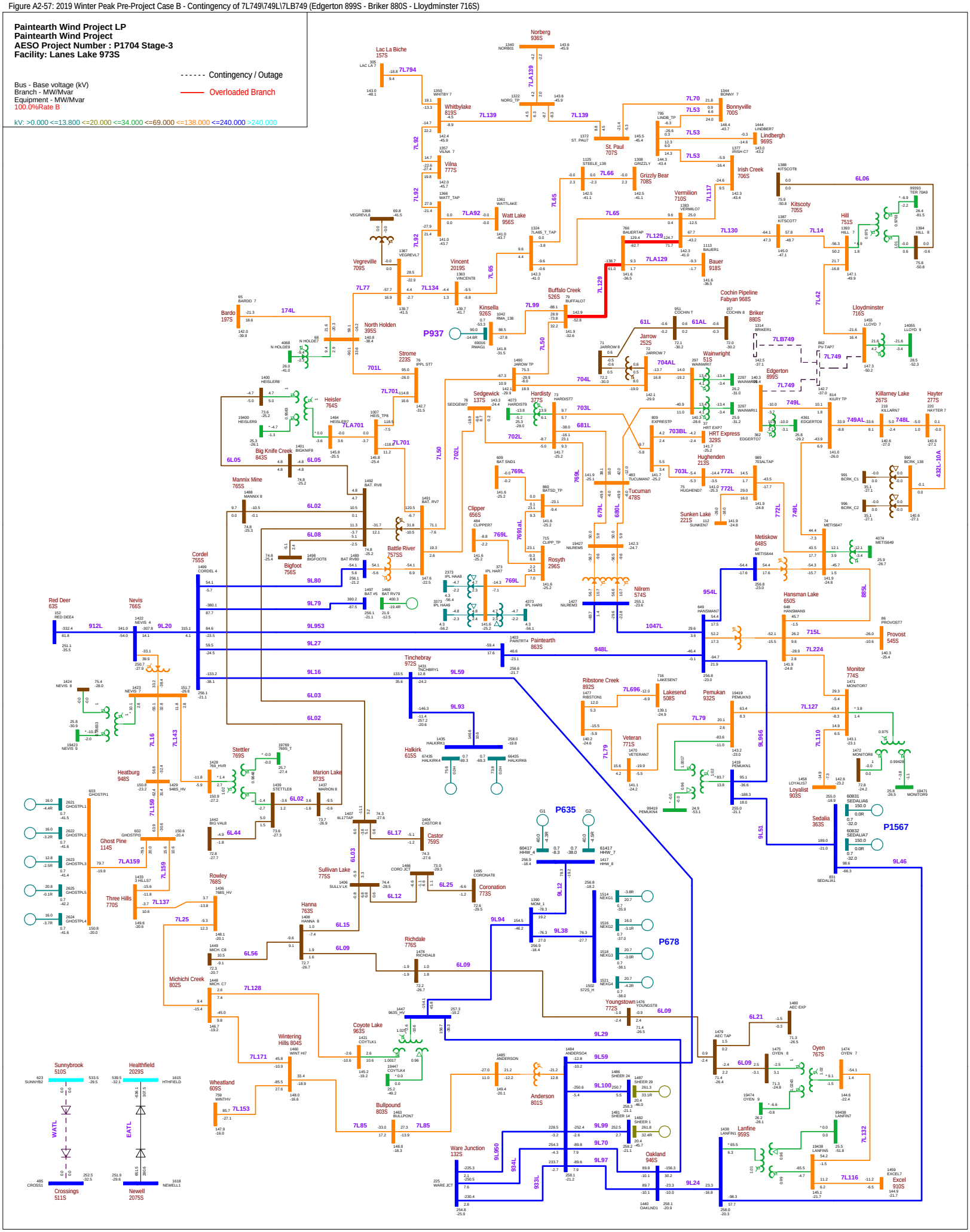

Figure A2-58: 2019 Winter Peak Pre-Project Case B - Contingency of 701L (North Holden 395S - Strome 223S)

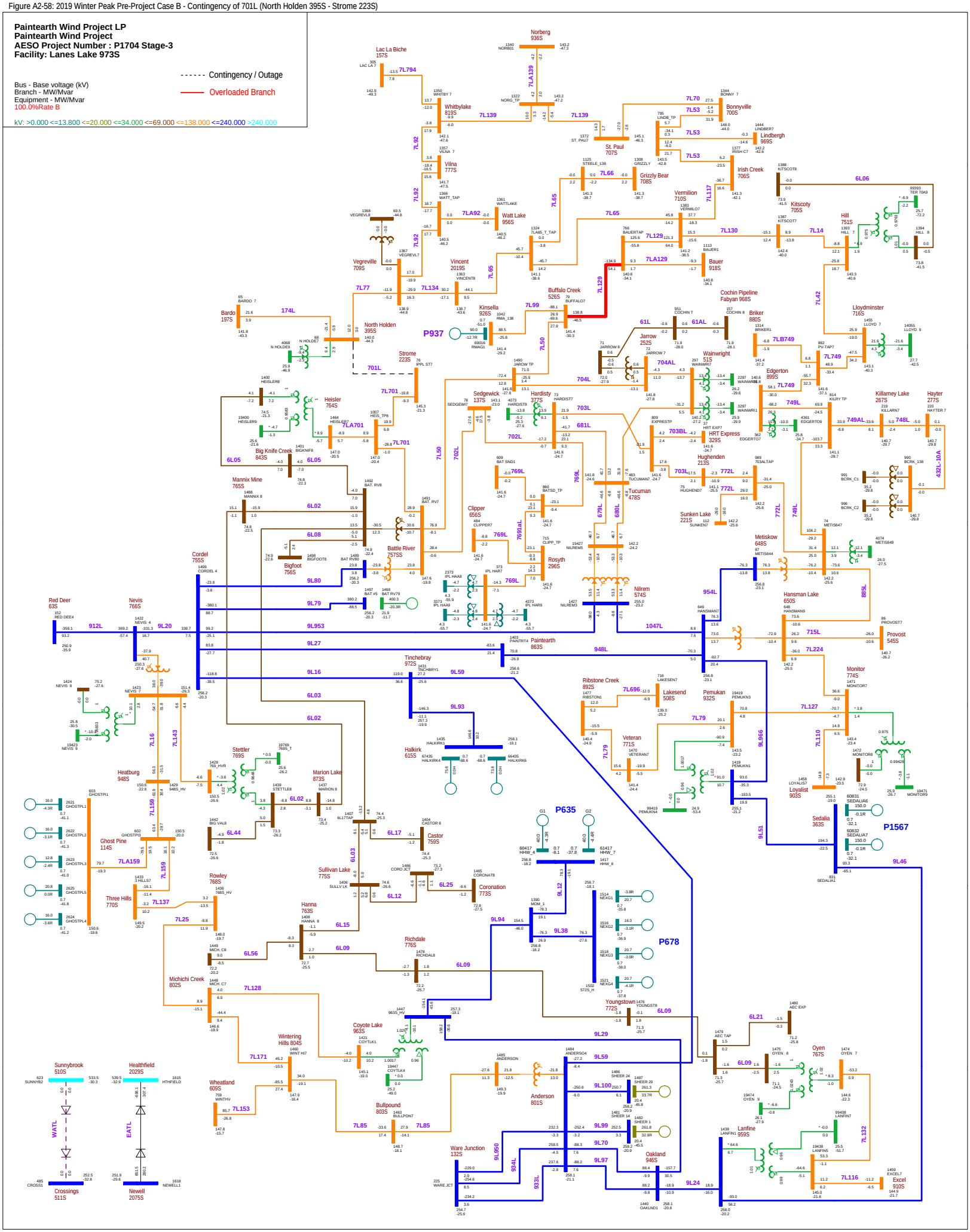

Figure A2-59: 2019 Winter Peak Pre-Project Case B - Contingency of 9L29 (Oakland 946S - Coyote Lake 963S)

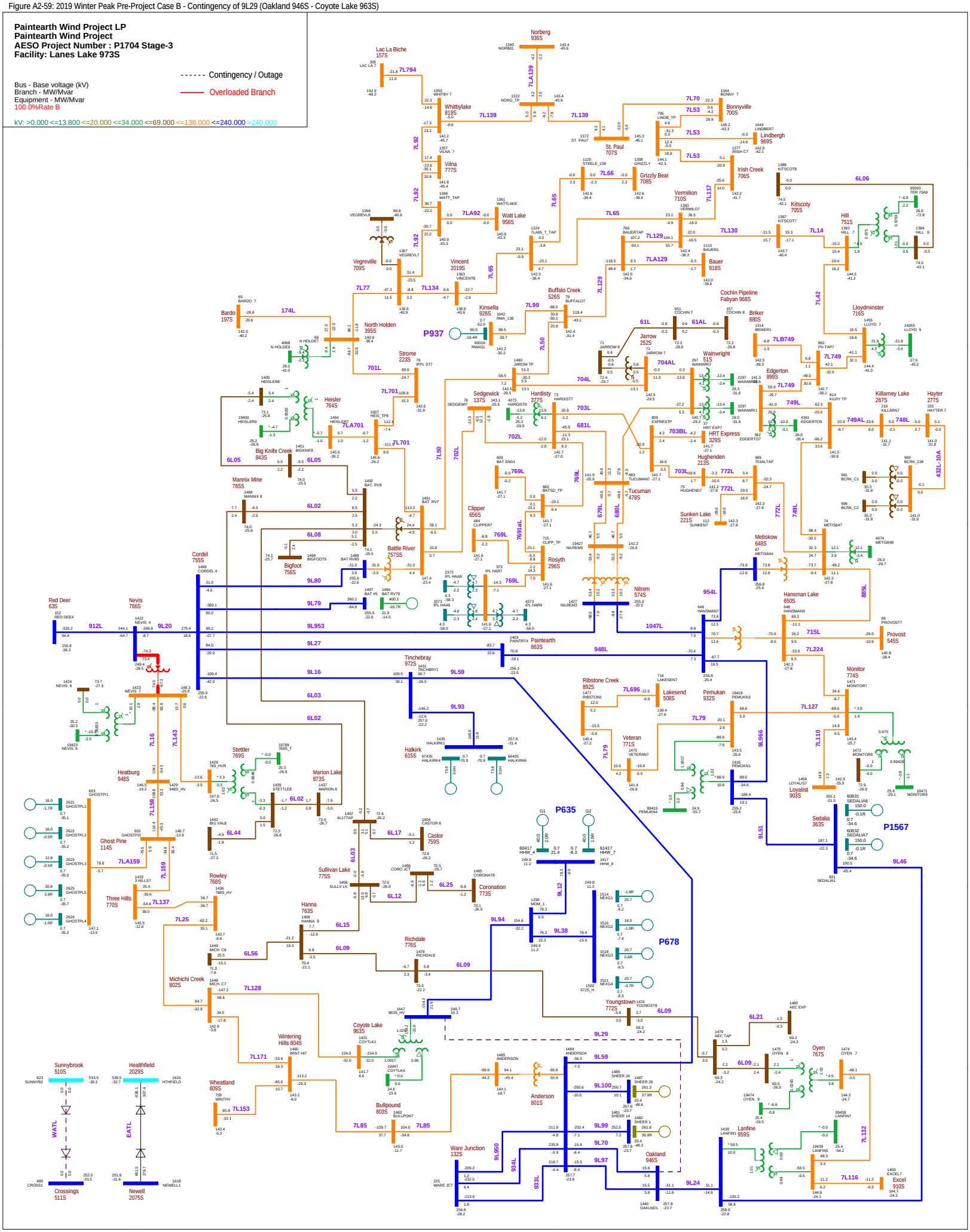

Figure A2-60: 2019 Winter Peak Pre-Project Case B - Contingency of 7L129\7LA129 (Buffalo Creek 526S - Vermilion 710S - Bauer 918S)

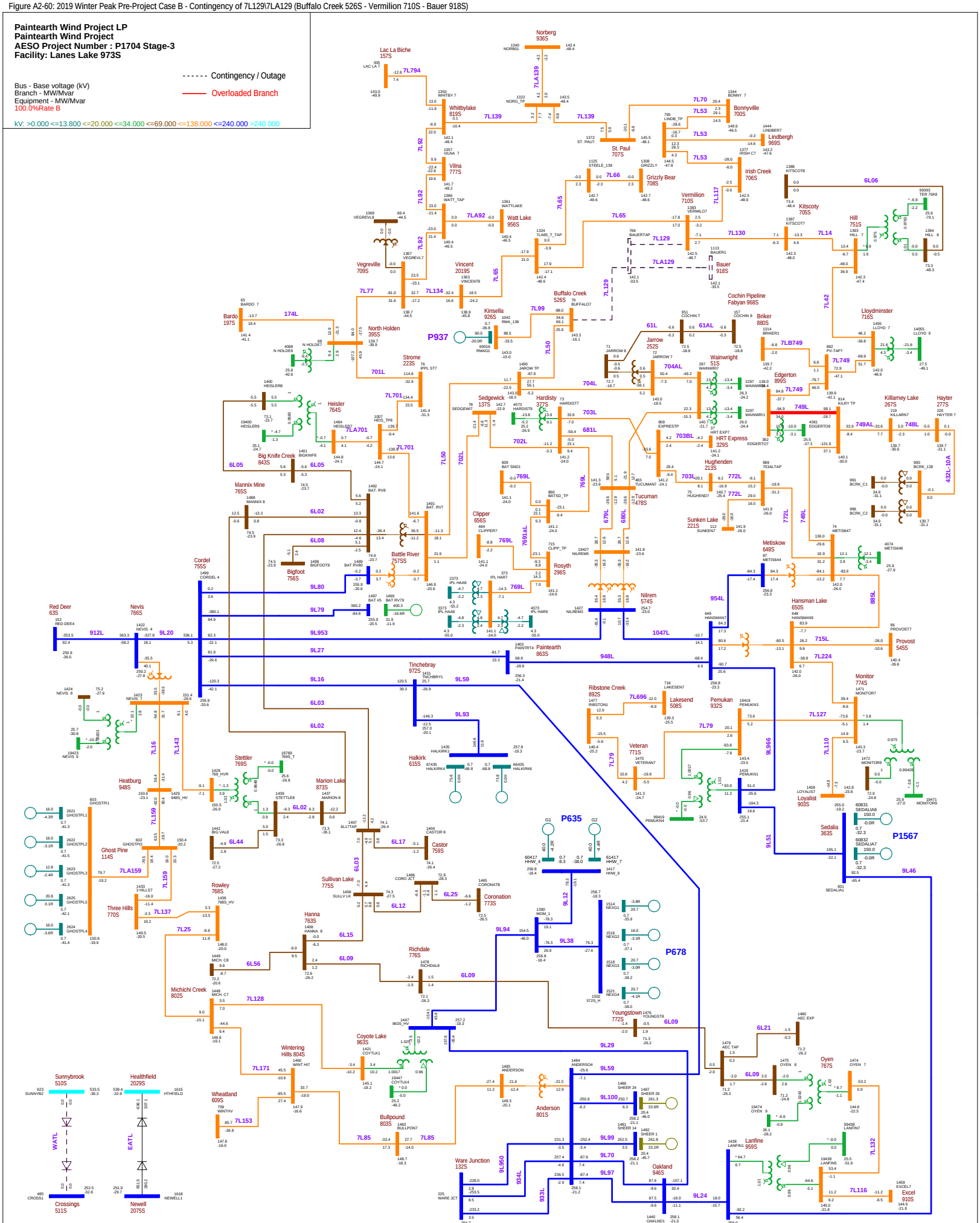

Figure A2-61: 2019 Winter Peak Pre-Project Case B - Contingency of 899ST3A (Edgerton 899S Transformer T3A)

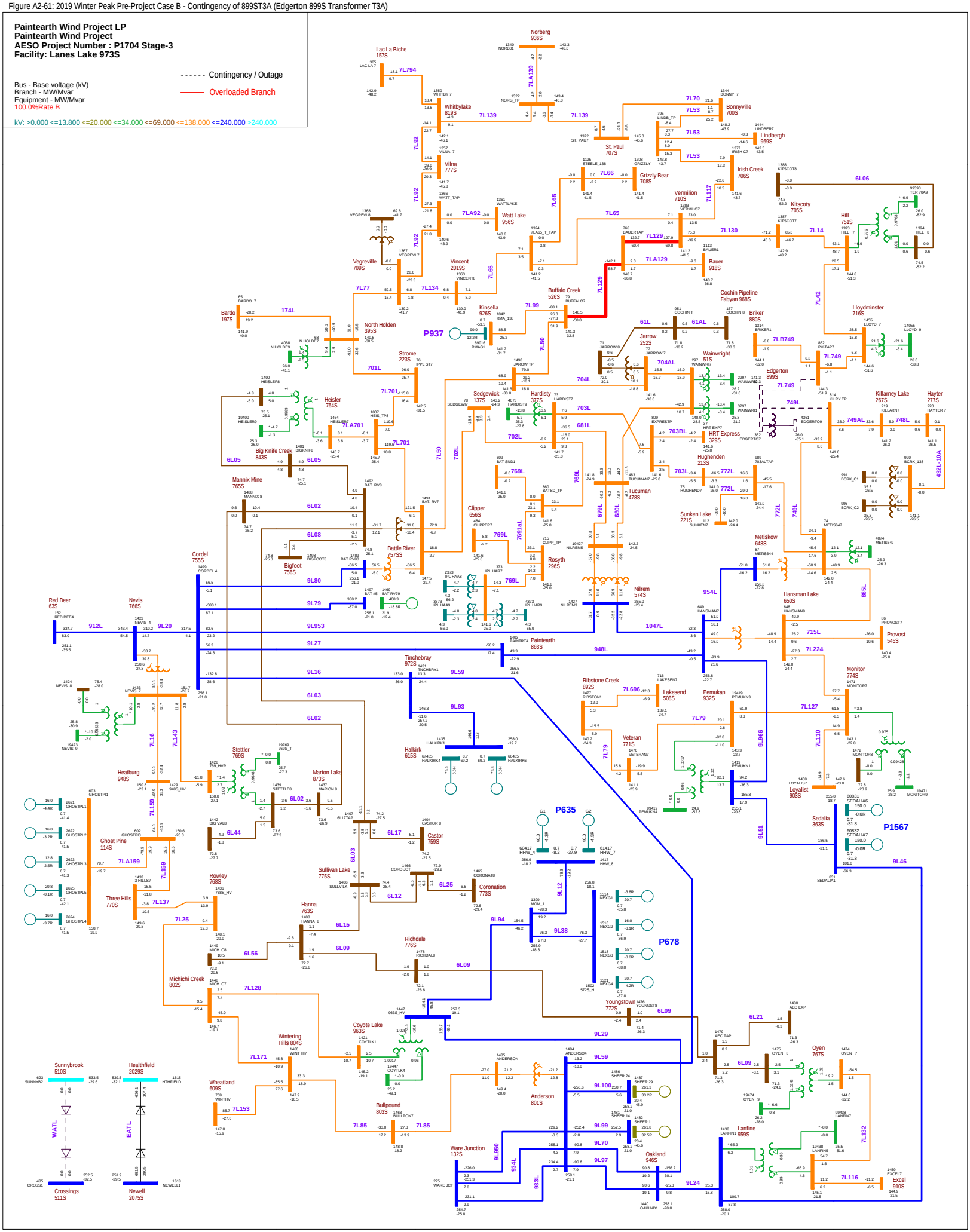
Paintearth Wind Project LP
Paintearth Wind Project
AESO Project Number : P1704 Stage-3
Facility: Lanes Lake 973S
Contingency / Outage
Overloaded Branch
Bus - Base voltage (kV)
Branch - MW/Mvar
Equipment - MW/Mvar
100.0%Rate B
kV: >0.000 <=13.800 <=20.000 <=34.000 <=69.000 <=138.000 <=240.000 >240.000
Norberg 936S
Lac La Biche 157S
Whitbylake 819S
Vilna 777S
Watt Lake 956S
Vegreville 709S
Vincent 2019S
Kinsella 926S
Buffalo Creek 526S
St. Paul 707S
Grizzly Bear 708S
Vermilion 710S
Bonnyville 700S
Lindbergh 969S
Irish Creek 706S
Kitscoty 705S
Hill 751S
Lloydminster 716S
Bardo 197S
North Holden 395S
Strome 223S
Heisler 764S
Big Knife Creek 843S
Mannix Mine 765S
Cordel 755S
Bigfoot 756S
Battle River 757SS
Sedgewick 137S
Hardisty 377S
Jarrow 252S
Wainwright 51S
Edgerton 899S
Killarney Lake 267S
Hayter 277S
Clipper 656S
Rosyth 296S
Nilrem 574S
Tucuman 478S
Sunken Lake 221S
Hughenden 213S
HRT Express 329S
Metiskow 648S
Hansman Lake 650S
Provost 545S
Red Deer 63S
Nevis 766S
Paintearth 863S
Tinchebray 972S
Ribstone Creek 892S
Lakesend 508S
Pemukan 932S
Veteran 771S
Monitor 774S
Loyalist 903S
Sedalia 363S
Heatburg 948S
Ghost Pine 114S
Three Hills 770S
Stettler 769S
Marion Lake 873S
Halkirk 615S
Castor 759S
Rowley 768S
Michichi Creek 802S
Sullivan Lake 775S
Coronation 773S
Hanna 763S
Richdale 776S
Youngstown 772S
Oyen 767S
Coyote Lake 963S
Wintering Hills 804S
Wheatland 609S
Bullpound 803S
Anderson 801S
Ware Junction 132S
Oakland 946S
Lanfine 959S
Excel 910S
Sunnybrook 510S
Healthfield 2029S
Crossings 511S
Newell 2075S
P937
P635
P678
P1567
174L
701L
6L05
6L02
6L08
9L80
9L79
9L953
9L27
9L16
6L03
9L59
9L93
6L44
6L17
6L02
6L12
6L25
6L15
6L09
6L56
7L128
7L171
7L153
7L85
9L94
9L38
9L12
9L29
9L59
9L100
9L99
9L70
9L97
9L24
9L950
934L
933L
6L21
6L09
7L132
7L116
912L
9L20
7L16
7L143
7L159
7L159
7L137
7L25
7L92
7L92
7L92
7L65
7L65
7L77
7L134
7L50
7L50
7L99
7L129
7L129
7L117
7L42
7L14
7L749
7L749
749L
748L
432L-10A
7L70
7L53
7L53
7L53
7L66
7L139
7L139
7LA139
7LA92
7LA129
7L130
6L06
61L
61AL
704AL
704L
703L
681L
702L
769L
769L
7691aL
679L
680L
703BL
703L
772L
772L
749L
954L
885L
1047L
948L
715L
7L224
9L966
7L127
7L110
9L51
7L79
7L696
7L79
9L46
7LA159
7LA701
7LA701
7LB749
7L7
7L7
7L7

Figure A2-62: 2019 Winter Peak Pre-Project Case B - Contingency of 9L20 (Nevis 766S - Cordel 755S)

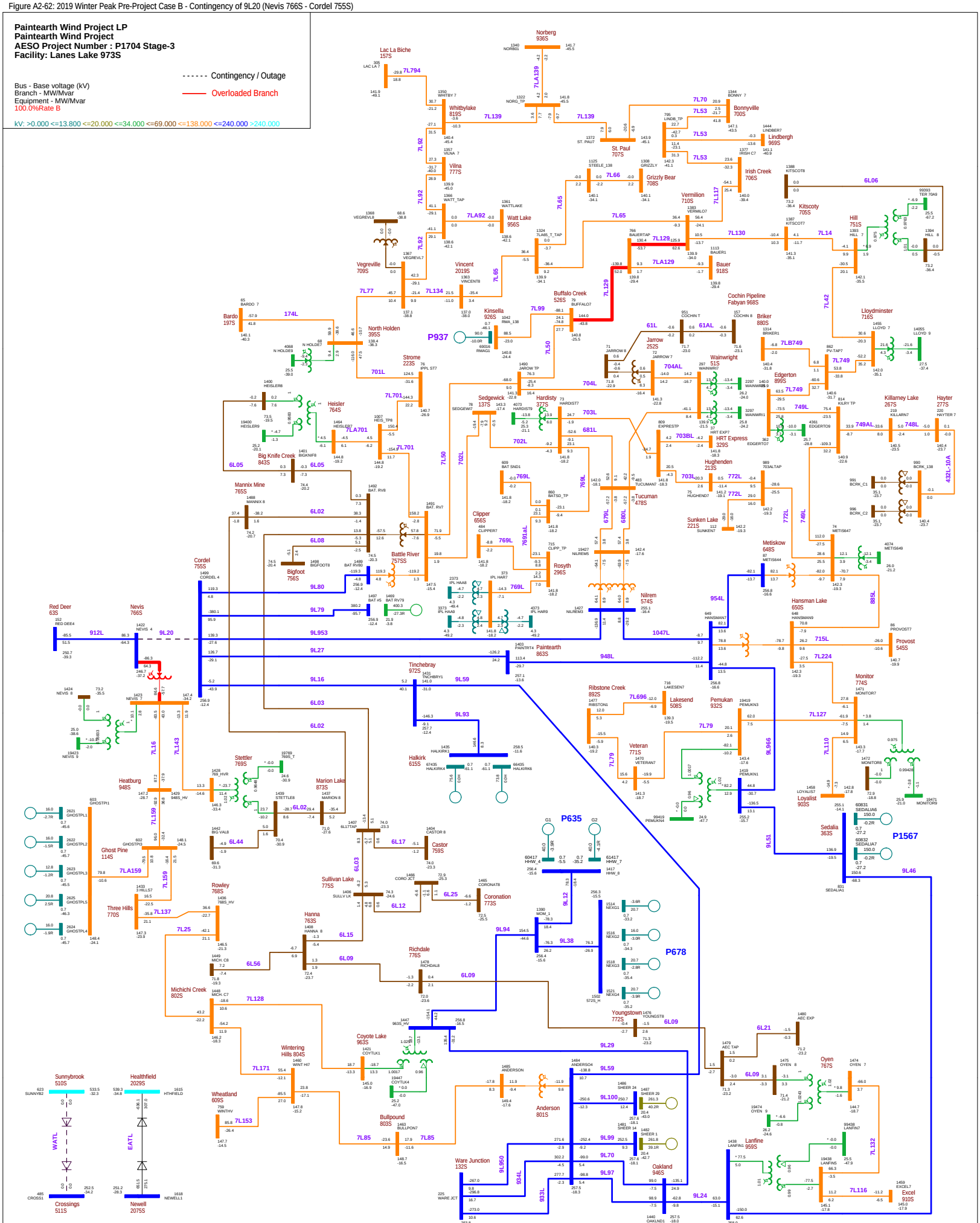

Figure A2-63: 2019 Winter Peak Pre-Project Case B - Contingency of 526ST1 or 526ST2 (Buffalo Creek 526S Transformer T1 or T2)

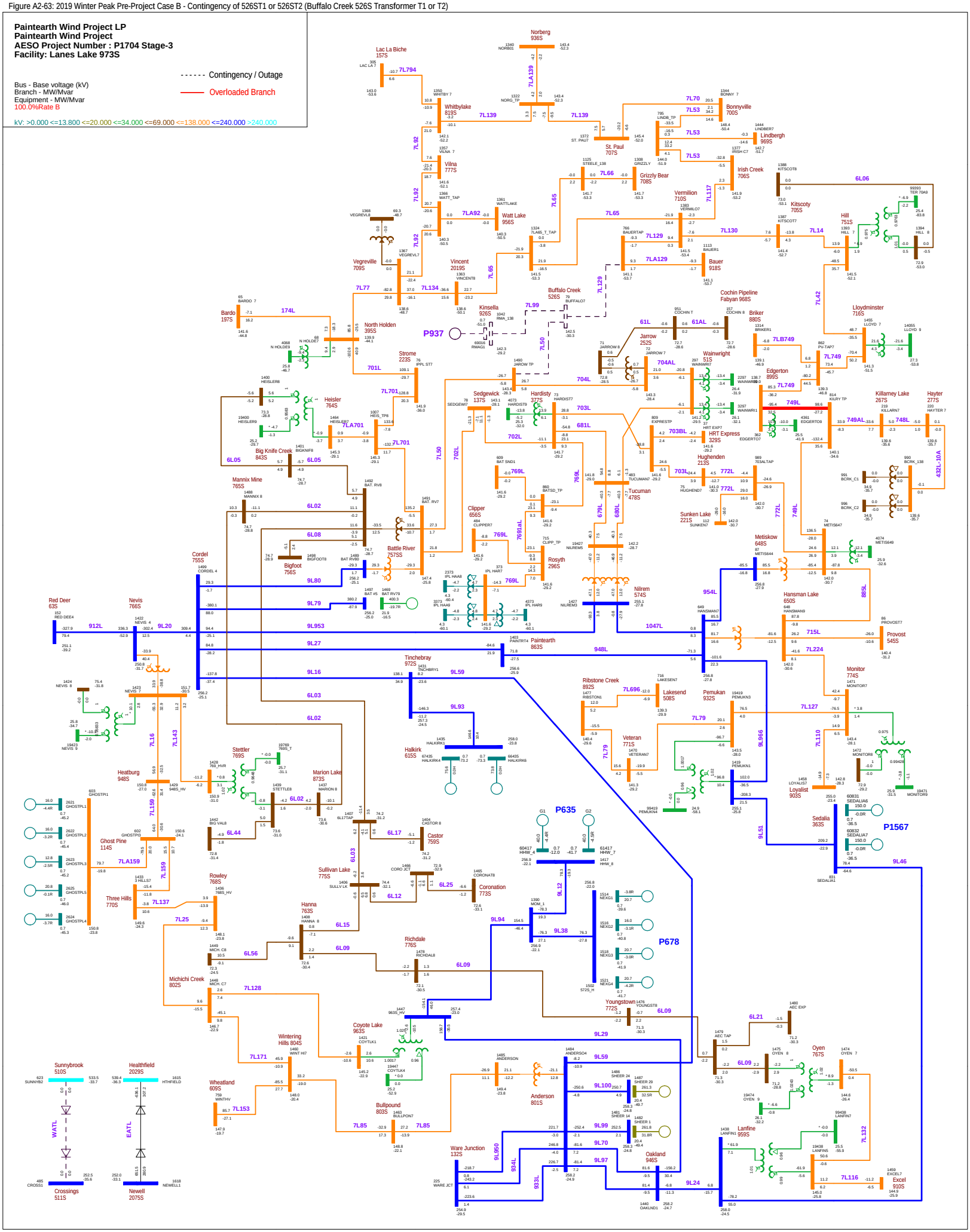

Figure A2-64: 2019 Winter Peak Pre-Project Case B - Contingency of 912L\9L912 (Red Deer 63S - Nevis 766S)

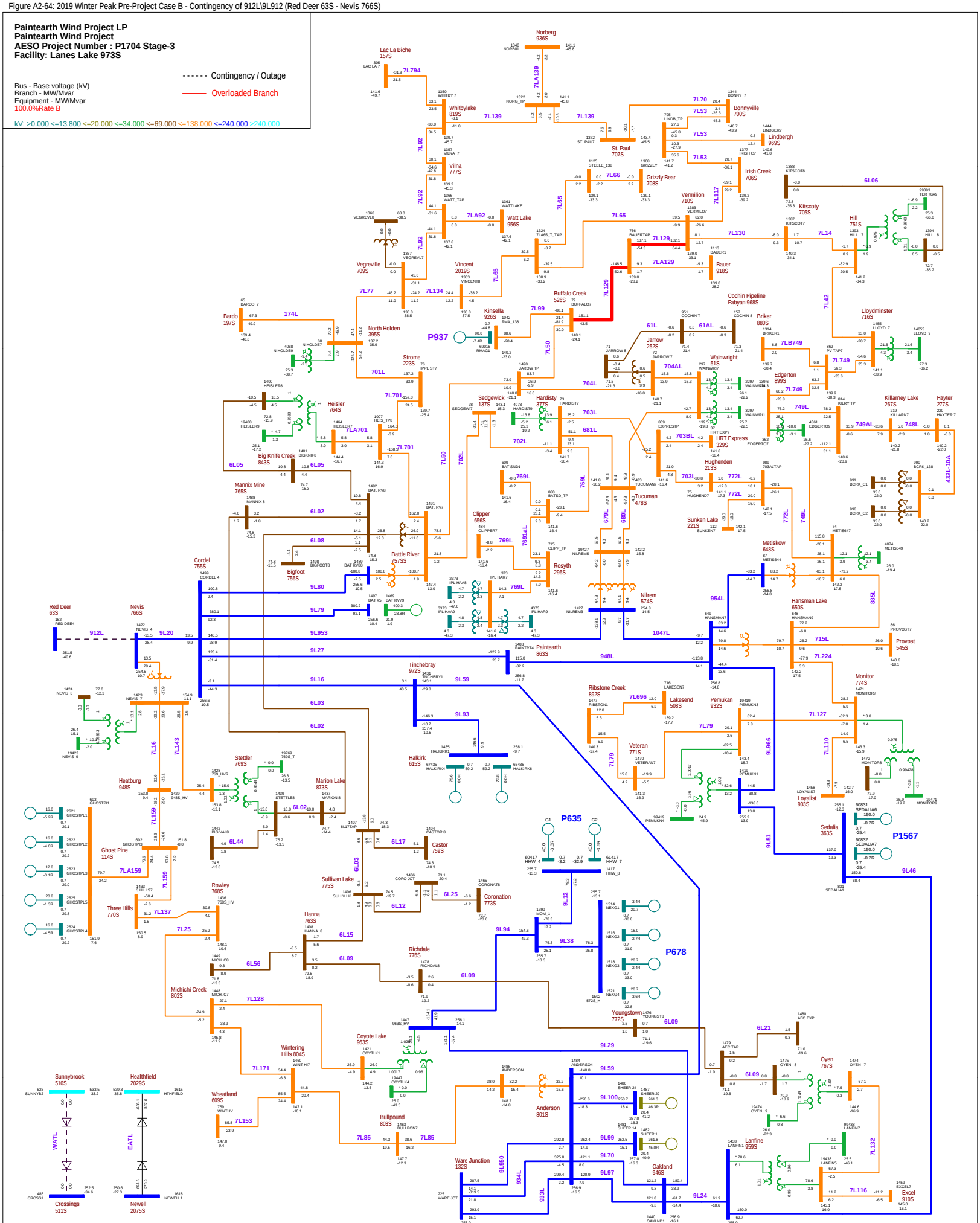

Figure A2-65: 2019 Winter Peak Pre-Project Case B - Contingency of EATL (Newell 2075S - Heathfield 2029S)

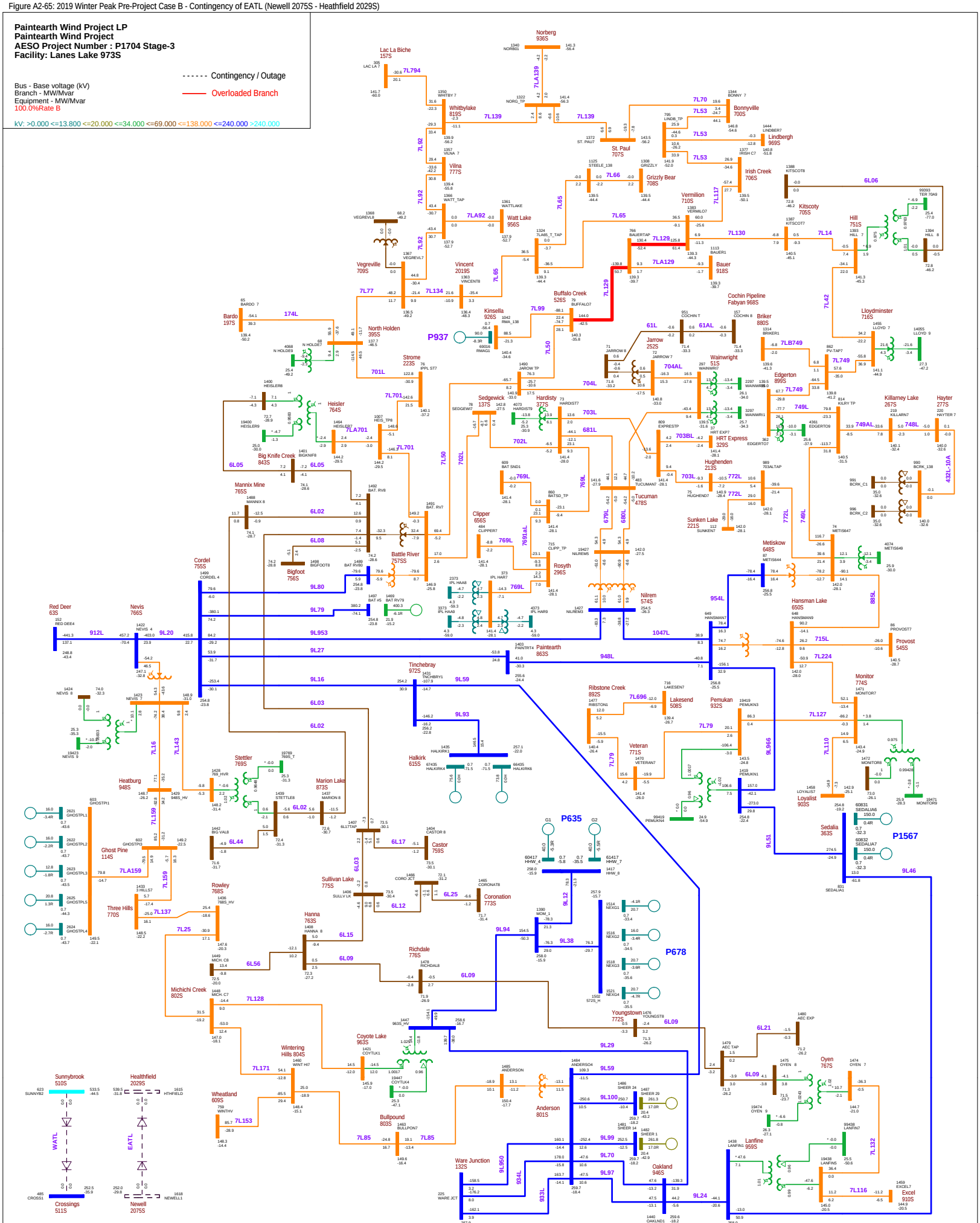

Figure A2-66: 2019 Winter Peak Pre-Project Case B - Contingency of 7L701\7LA701\701L (Battle River 757S - Heisler 764S - Strome 223S)

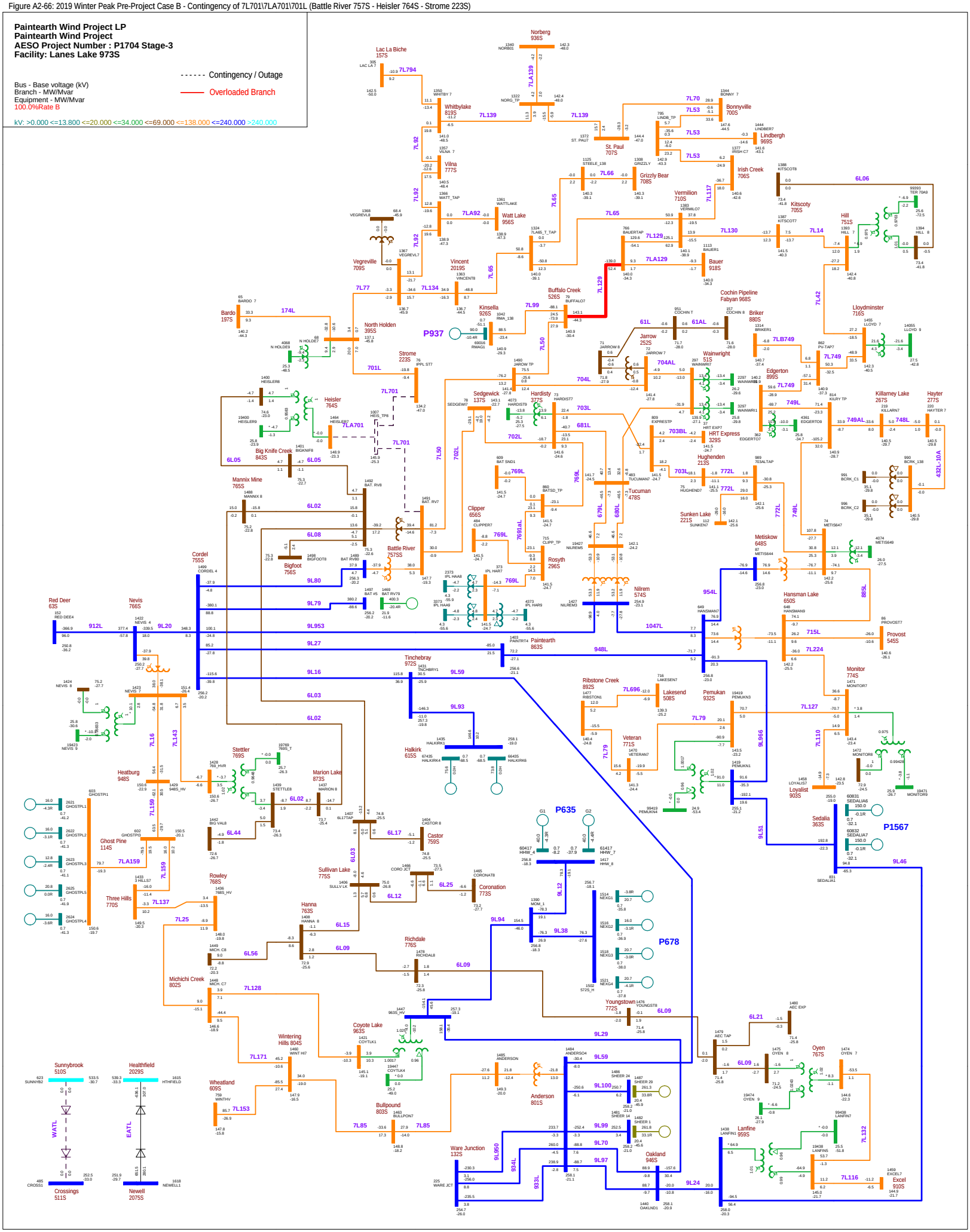

Attachment A3

Post-Project Power Flow Diagrams

List of Figures

Scenario and Case Name	Contingency (System Element Lost)	Figure Number
2019 Summer Light Post-Project Alternative 2 Case A	N-0 (System Normal Condition)	Figure A3-1
	9L29 (Oakland 946S - Coyote Lake 963S)	Figure A3-2
	648ST1 (Metiskow 648S Transformer T1)	Figure A3-3
	9L20 (Nevis 766S - Cordel 755S)	Figure A3-4
	766S901T (Nevis 766S Transformer 901T)	Figure A3-5
	912L\9L912 (Red Deer 63S - Nevis 766S)	Figure A3-6
2019 Summer Light Post-Project Alternative 2 Case B	N-0 (System Normal Condition)	Figure A3-7
	766S901T (Nevis 766S Transformer 901T)	Figure A3-8
	912L\9L912 (Red Deer 63S - Nevis 766S)	Figure A3-9
	9L20 (Nevis 766S - Cordel 755S)	Figure A3-10
	9L46 (Lanfine 959S - Sedalia 363S)	Figure A3-11
	9L29 (Oakland 946S - Coyote Lake 963S)	Figure A3-12
	648ST1 (Metiskow 648S Transformer T1)	Figure A3-13
	757S912T (Battle River 757S Transformer 912T)	Figure A3-14
	9L80 (Battle River 757S - Cordel 755S)	Figure A3-15
2019 Summer Peak Post-Project Alternative 2 Case A	N-0 (System Normal Condition)	Figure A3-16
	7L77 (North Holden 395S - Vegreville 709S)	Figure A3-17
	395ST1 (North Holden 395S Transformer T1)	Figure A3-18
	766S901T (Nevis 766S Transformer 901T)	Figure A3-19
	966L\9L966 (Hansman Lake 650S - Pemukan 932S)	Figure A3-20
	749L\749AL (Metiskow 648S - Edgerton 899S)	Figure A3-21
	7L42 (Hill 751S - Lloydminster 716S)	Figure A3-22
	7L749\749L\7LB749 (Edgerton 899S - Briker 880S - Lloydminster 716S)	Figure A3-23
	7L50 (Battle River 757S - Jarrow 252S - Buffalo Creek 526S)	Figure A3-24
	EATL (Newell 2075S - Heathfield 2029S)	Figure A3-25
	7L701\7LA701\701L (Battle River 757S - Heisler 764S - Strome 223S)	Figure A3-26
	9L16 (Tinchebray 972S - Cordel 755S)	Figure A3-27
	899ST3A (Edgerton 899S Transformer T3A)	Figure A3-28
	9L29 (Oakland 946S - Coyote Lake 963S)	Figure A3-29
	9L20 (Nevis 766S - Cordel 755S)	Figure A3-30
	912L\9L912 (Red Deer 63S - Nevis 766S)	Figure A3-31
	701L (North Holden 395S - Strome 223S)	Figure A3-32

Scenario and Case Name	Contingency (System Element Lost)	Figure Number
	526ST1 or 526ST2 (Buffalo Creek 526S Transformer T1 or T2)	Figure A3-33
2019 Summer Peak Post-Project Alternative 2 Case B	N-0 (System Normal Condition)	Figure A3-34
	7L749\749L\7LB749 (Edgerton 899S - Briker 880S - Lloydminster 716S)	Figure A3-35
	701L (North Holden 395S - Strome 223S)	Figure A3-36
	395ST1 (North Holden 395S Transformer T1)	Figure A3-37
	769L\769AL (Hardisty 377S - Clipper 656S - Rosyth 286S)	Figure A3-38
	296ST1 or 296ST2 (Rosyth 286S Transformer T1 or T2	Figure A3-39
	9L20 (Nevis 766S - Cordel 755S)	Figure A3-40
	966L\9L966 (Hansman Lake 650S - Pemukan 932S)	Figure A3-41
	7L42 (Hill 751S - Lloydminster 716S)	Figure A3-42
	650ST1 (Hansman Lake 650S Transformer T1)	Figure A3-43
	954L (Hansman Lake 650S - Metiskow 648S)	Figure A3-44
	377ST1 (Hardisty 377S Transformer T1)	Figure A3-45
	9L950\950L (Ware Junction 132S - Anderson 801S)	Figure A3-46
	51ST3 or 51ST4 (Wainwright 51S Transformer T3 or T4)	Figure A3-47
	9L46 (Lanfine 959S - Sedalia 363S)	Figure A3-48
	9L29 (Oakland 946S - Coyote Lake 963S)	Figure A3-49
	899ST3A (Edgerton 899S Transformer T3A)	Figure A3-50
	681L (Tucuman 478S - Hardisty 377S)	Figure A3-51
	7L77 (North Holden 395S - Vegreville 709S)	Figure A3-52
	EATL (Newell 2075S - Heathfield 2029S)	Figure A3-53
	7L701\7LA701\701L (Battle River 757S - Heisler 764S - Strome 223S)	Figure A3-54
	9L933\933L (Ware Junction 132S - Anderson 801S)	Figure A3-55
	766S901T (Nevis 766S Transformer 901T)	Figure A3-56
	749L\749AL (Metiskow 648S - Edgerton 899S)	Figure A3-57
	912L\9L912 (Red Deer 63S - Nevis 766S)	Figure A3-58
	9L934\934L (Ware Junction 132S - Anderson 801S)	Figure A3-59
	9L16 (Tinchebray 972S - Cordel 755S)	Figure A3-60
	885L (Hansman Lake 650S - Metiskow 648S)	Figure A3-61
2019 Winter Peak Post-Project Alternative 2 Case A	N-0 (System Normal Condition)	Figure A3-62
	9L20 (Nevis 766S - Cordel 755S)	Figure A3-63
	912L\9L912 (Red Deer 63S - Nevis 766S)	Figure A3-64
	7L129\7LA129 (Buffalo Creek 526S - Vermilion 710S - Bauer 918S)	Figure A3-65

Scenario and Case Name	Contingency (System Element Lost)	Figure Number
	749L\749AL (Metiskow 648S - Edgerton 899S)	Figure A3-66
	899ST3A (Edgerton 899S Transformer T3A)	Figure A3-67
	526ST1 or 526ST2 (Buffalo Creek 526S Transformer T1 or T2)	Figure A3-68
	7L50 (Battle River 757S - Jarrow 252S - Buffalo Creek 526S)	Figure A3-69
	7L749\749L\7LB749 (Edgerton 899S - Briker 880S - Lloydminster 716S)	Figure A3-70
	766S901T (Nevis 766S Transformer 901T)	Figure A3-71
2019 Winter Peak Post-Project Alternative 2 Case B	N-0 (System Normal Condition)	Figure A3-72
	7L749\749L\7LB749 (Edgerton 899S - Briker 880S - Lloydminster 716S)	Figure A3-73
	EATL (Newell 2075S - Heathfield 2029S)	Figure A3-74
	899ST3A (Edgerton 899S Transformer T3A)	Figure A3-75
	9L20 (Nevis 766S - Cordel 755S)	Figure A3-76
	766S901T (Nevis 766S Transformer 901T)	Figure A3-77
	912L\9L912 (Red Deer 63S - Nevis 766S)	Figure A3-78
	7L129\7LA129 (Buffalo Creek 526S - Vermilion 710S - Bauer 918S)	Figure A3-79
	395ST1 (North Holden 395S Transformer T1)	Figure A3-80
	7L701\7LA701\701L (Battle River 757S - Heisler 764S - Strome 223S)	Figure A3-81
	7L77 (North Holden 395S - Vegreville 709S)	Figure A3-82
	701L (North Holden 395S - Strome 223S)	Figure A3-83
	526ST1 or 526ST2 (Buffalo Creek 526S Transformer T1 or T2)	Figure A3-84
	7L42 (Hill 751S - Lloydminster 716S)	Figure A3-85
	749L\749AL (Metiskow 648S - Edgerton 899S)	Figure A3-86
	9L29 (Oakland 946S - Coyote Lake 963S)	Figure A3-87

Figure A3-1: 2019 Summer Light Post-Project Alternative 2 Case A - N-0 (System Normal Condition)

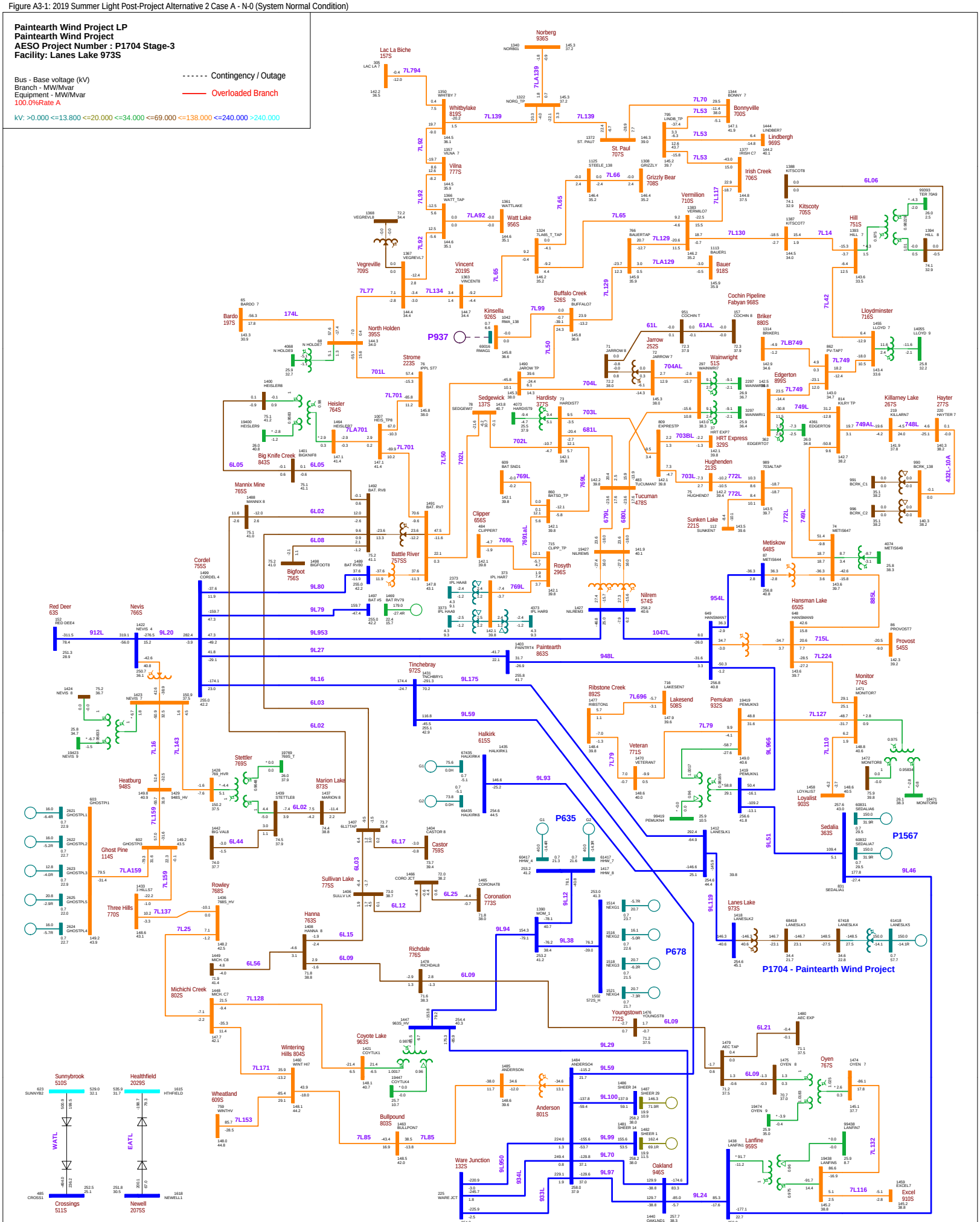

Figure A3-2: 2019 Summer Light Post-Project Alternative 2 Case A - Contingency of 9L29 (Oakland 946S - Coyote Lake 963S)

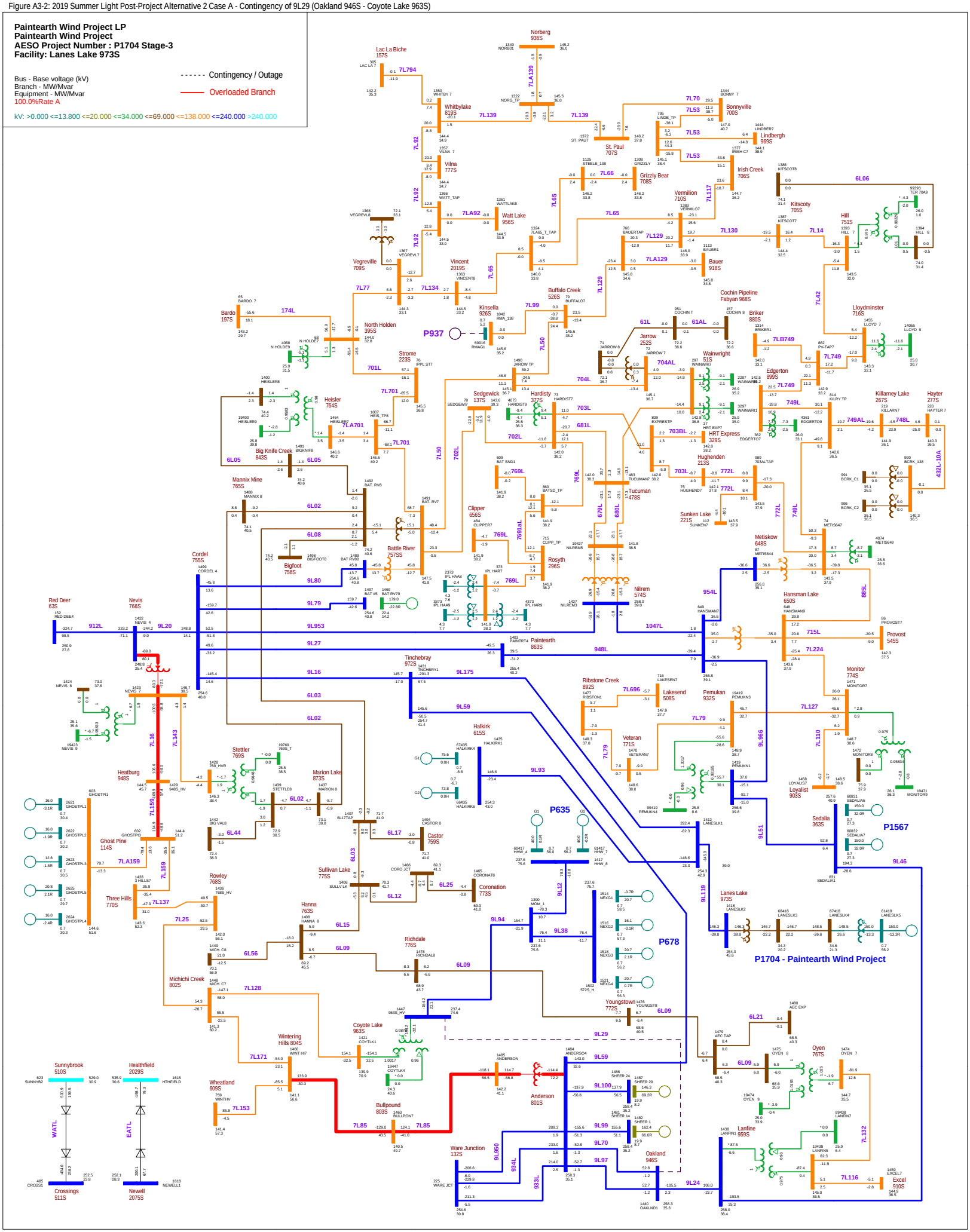

Figure A3-3: 2019 Summer Light Post-Project Alternative 2 Case A - Contingency of 648ST1 (Metiskow 648S Transformer T1)

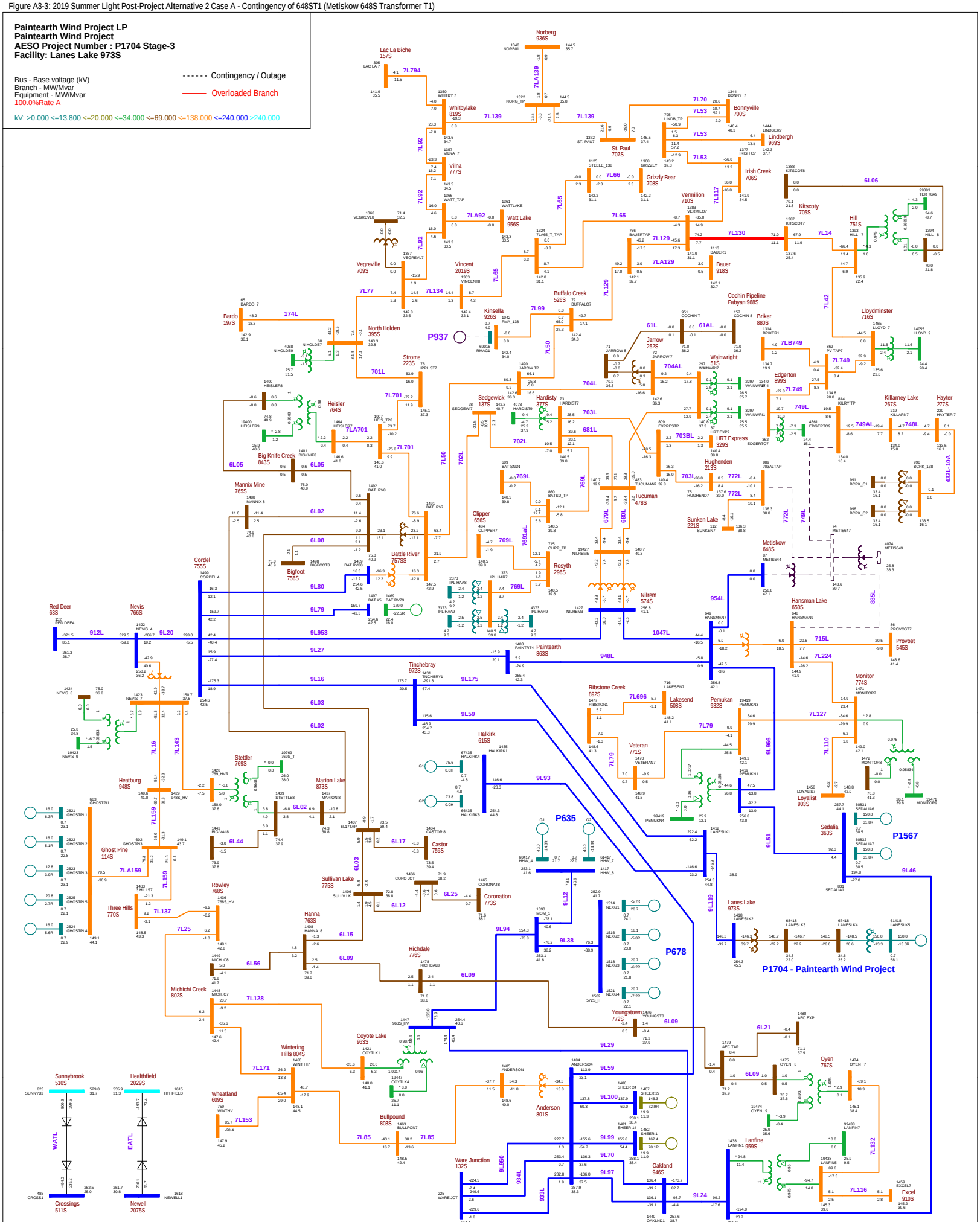

Figure A3-4: 2019 Summer Light Post-Project Alternative 2 Case A - Contingency of 9L20 (Nevis 766S - Cordel 755S)

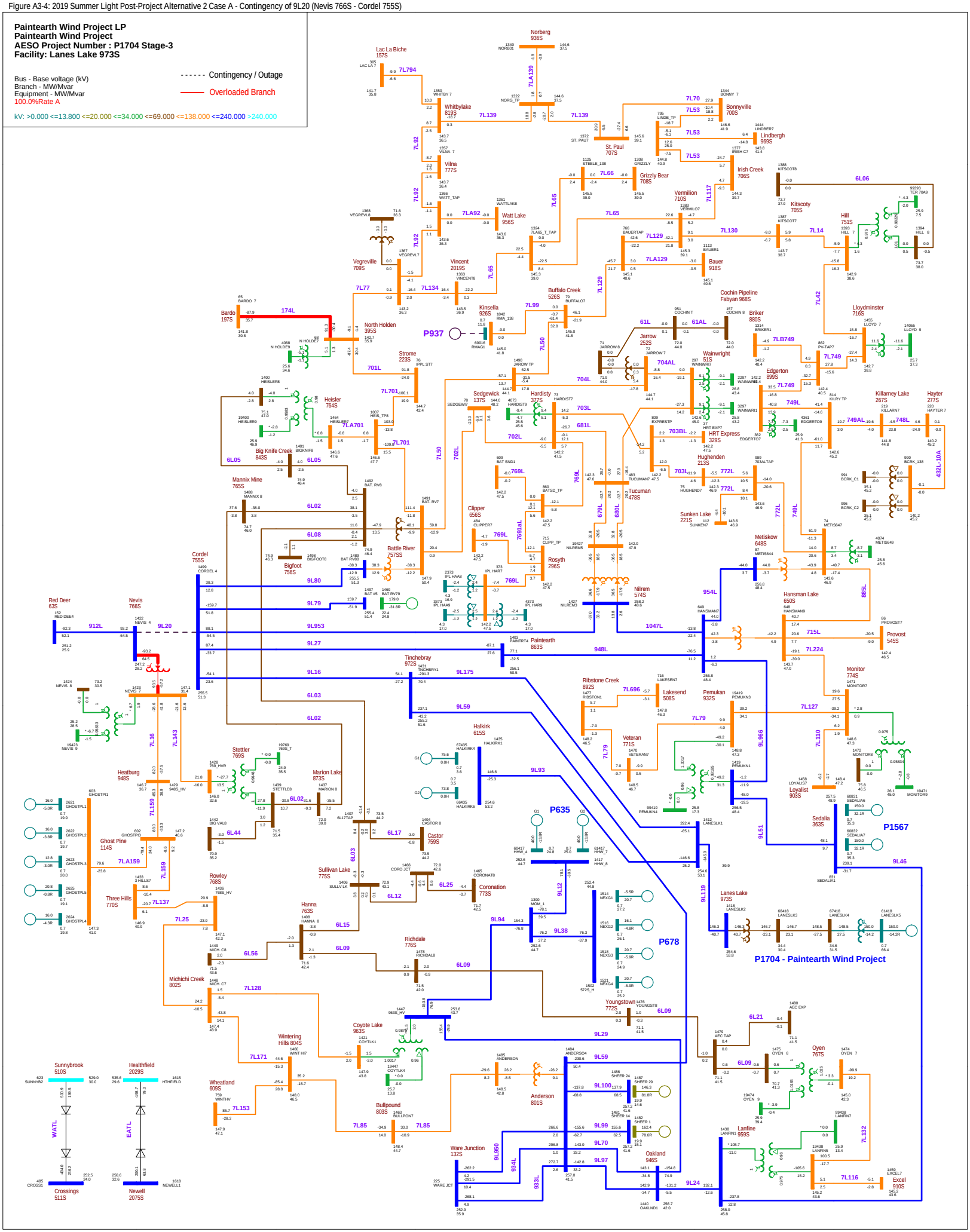
Paintearth Wind Project LP
Paintearth Wind Project
AESO Project Number : P1704 Stage-3
Facility: Lanes Lake 973S
Bus - Base voltage (kV)
Branch - MW/Mvar
Equipment - MW/Mvar
100.0%Rate A
kV: >0.000 <=13.800 <=20.000 <=34.000 <=69.000 <=138.000 <=240.000 >240.000
Contingency / Outage
Overloaded Branch
Norberg 936S
Lac La Biche 157S
Whitbylake 819S
Vilna 777S
Watt Lake 956S
Vegreville 709S
Vincent 2019S
Kinsella 926S
Buffalo Creek 526S
St. Paul 707S
Grizzly Bear 708S
Vermilion 710S
Bonnyville 700S
Lindbergh 969S
Irish Creek 706S
Kitscoty 705S
Hill 751S
Lloydminster 716S
Cochin Pipeline Fabyan 968S
Briker 880S
Jarrow 252S
Wainwright 51S
Edgerton 899S
HRT Express 329S
Killarney Lake 267S
Hayter 277S
Bardo 197S
North Holden 395S
Strome 223S
Heisler 764S
Big Knife Creek 843S
Mannix Mine 765S
Cordel 755S
Battle River 757SS
Bigfoot 756S
Red Deer 63S
Nevis 766S
Heatburg 948S
Ghost Pine 114S
Three Hills 770S
Rowley 768S
Michichi Creek 802S
Stettler 769S
Marion Lake 873S
Halkirk 615S
Sullivan Lake 775S
Hanna 763S
Richdale 776S
Coronation 773S
Castor 759S
Tinchebray 972S
Paintearth 863S
Clipper 656S
Sedgewick 137S
Hardisty 377S
Rosyth 296S
Nilrem 574S
Tucuman 478S
Sunken Lake 221S
Hughenden 213S
Metiskow 648S
Hansman Lake 650S
Provost 545S
Ribstone Creek 892S
Lakesend 508S
Pemukan 932S
Veteran 771S
Monitor 774S
Loyalist 903S
Sedalia 363S
Lanes Lake 973S
P1704 - Paintearth Wind Project
P678
P635
P1567
Sunnybrook 510S
Healthfield 2029S
Crossings 511S
Newell 2075S
Wheatland 609S
Wintering Hills 804S
Coyote Lake 963S
Bullpound 803S
Anderson 801S
Ware Junction 132S
Oakland 946S
Youngstown 772S
Oyen 767S
Lanfine 959S
Excel 910S
Kitscoty 6L06
Hill 7L14
Irish Creek 7L117
Vermilion 7L65
Vincent 7L65
Watt Lake 7L92
Vilna 7L92
Whitbylake 7L139
Norberg 7L139
Lac La Biche 7L794
Bonnyville 7L70
Lindbergh 7L53
St. Paul 7L66
Grizzly Bear 7L129
Bauer 7L130
Buffalo Creek 7L99
Kinsella 7L50
Vegreville 7L77
Strome 701L
Heisler 7L701
Big Knife Creek 6L05
Mannix Mine 6L02
Cordel 9L20
Red Deer 912L
Nevis 9L79
Bardo 174L
North Holden P937
Battle River 6L08
Bigfoot 9L80
Heatburg 6L03
Ghost Pine 7LA159
Three Hills 7L137
Rowley 7L25
Michichi Creek 7L128
Stettler 6L02
Marion Lake 9L93
Halkirk 9L16
Sullivan Lake 6L12
Hanna 6L09
Richdale 6L09
Coronation 6L25
Castor 6L17
Tinchebray 9L175
Paintearth 948L
Clipper 769L
Sedgewick 702L
Hardisty 703L
Rosyth 681L
Nilrem 1047L
Tucuman 679L
Sunken Lake 772L
Hughenden 703L
Hardisty 7L50
Jarrow 704L
Wainwright 704AL
Edgerton 7L749
Killarney Lake 749L
Hayter 749AL
Metiskow 954L
Hansman Lake 885L
Provost 715L
Ribstone Creek 7L696
Lakesend 7L79
Pemukan 9L966
Veteran 7L79
Monitor 7L127
Loyalist 7L110
Sedalia 9L51
Lanes Lake 9L119
Paintearth 948L
Tinchebray 9L59
Halkirk 9L93
Sullivan Lake 9L94
Hanna 9L12
Richdale 9L38
Coronation 9L46
Castor 6L17
Rowley 6L25
Michichi Creek 6L56
Wintering Hills 7L171
Wheatland 7L153
Coyote Lake 9L29
Bullpound 7L85
Ware Junction 9L950
Oakland 9L97
Youngstown 6L09
Oyen 6L09
Lanfine 7L132
Excel 7L116
Anderson 9L59
Sheer 9L100
Sheer 9L99
Sheer 9L70
Sheer 9L24
Kitscoty 7L14
Hill 7L42
Lloydminster 7L749
Killarney Lake 749L
Hayter 749AL
Edgerton 7L749
Wainwright 704AL
Jarrow 704L
Hardisty 703L
Hughenden 703L
Sunken Lake 772L
Tucuman 679L
Nilrem 680L
Rosyth 681L
Clipper 769L
Sedgewick 702L
Hardisty 7L50
Strome 701L
Heisler 7L701
Big Knife Creek 6L05
Mannix Mine 6L02
Cordel 9L20
Red Deer 912L
Nevis 9L79
Bardo 174L
North Holden P937
Battle River 6L08
Bigfoot 9L80
Heatburg 6L03
Ghost Pine 7LA159
Three Hills 7L137
Rowley 7L25
Michichi Creek 7L128
Stettler 6L02
Marion Lake 9L93
Halkirk 9L16
Sullivan Lake 6L12
Hanna 6L09
Richdale 6L09
Coronation 6L25
Castor 6L17
Tinchebray 9L175
Paintearth 948L
Vincent 7L65
Watt Lake 7L92
Vilna 7L92
Whitbylake 7L139
Norberg 7L139
Lac La Biche 7L794
Bonnyville 7L70
Lindbergh 7L53
St. Paul 7L53
Grizzly Bear 7L66
Bauer 7L129
Vermilion 7L65
Irish Creek 7L117
Kitscoty 6L06
Hill 7L14
Lloydminster 7L42
Cochin Pipeline Fabyan 7L42
Briker 7LB749
Jarrow 61L
Wainwright 61AL
Edgerton 7L749
Killarney Lake 749L
Hayter 749AL
Metiskow 954L
Hansman Lake 885L
Provost 715L
Ribstone Creek 7L696
Lakesend 7L79
Pemukan 9L966
Veteran 7L79
Monitor 7L127
Loyalist 7L110
Sedalia 9L51
Lanes Lake 9L119
Paintearth 948L
Tinchebray 9L175
Halkirk 9L93
Sullivan Lake 9L94
Hanna 9L12
Richdale 9L38
Coronation 9L46
Castor 6L17
Rowley 6L25
Michichi Creek 6L56
Wintering Hills 7L171
Wheatland 7L153
Coyote Lake 9L29
Bullpound 7L85
Ware Junction 9L950
Oakland 9L97
Youngstown 6L09
Oyen 6L09
Lanfine 7L132
Excel 7L116
Anderson 9L59
Sheer 9L100
Sheer 9L99
Sheer 9L70
Sheer 9L24
Clipper 7691AL
Battle River 7L691AL
Nilrem 680L
Tucuman 679L
Sunken Lake 772L
Hughenden 703L
Hardisty 703L
Sedgewick 702L
Clipper 769L

Figure A3-5: 2019 Summer Light Post-Project Alternative 2 Case A - Contingency of 766S901T (Nevis 766S Transformer 901T)

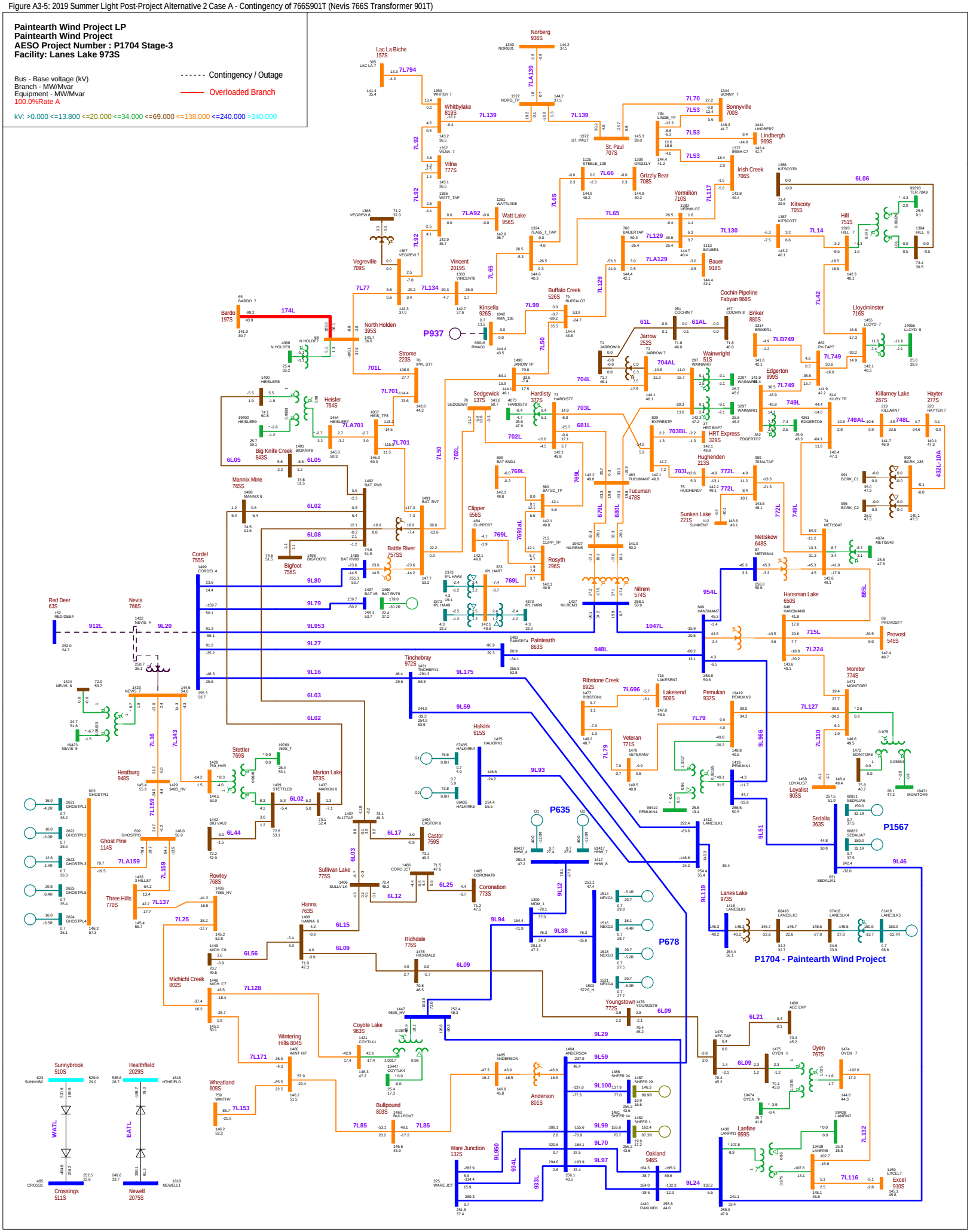

Figure A3-6: 2019 Summer Light Post-Project Alternative 2 Case A - Contingency of 912L\9L912 (Red Deer 63S - Nevis 766S)

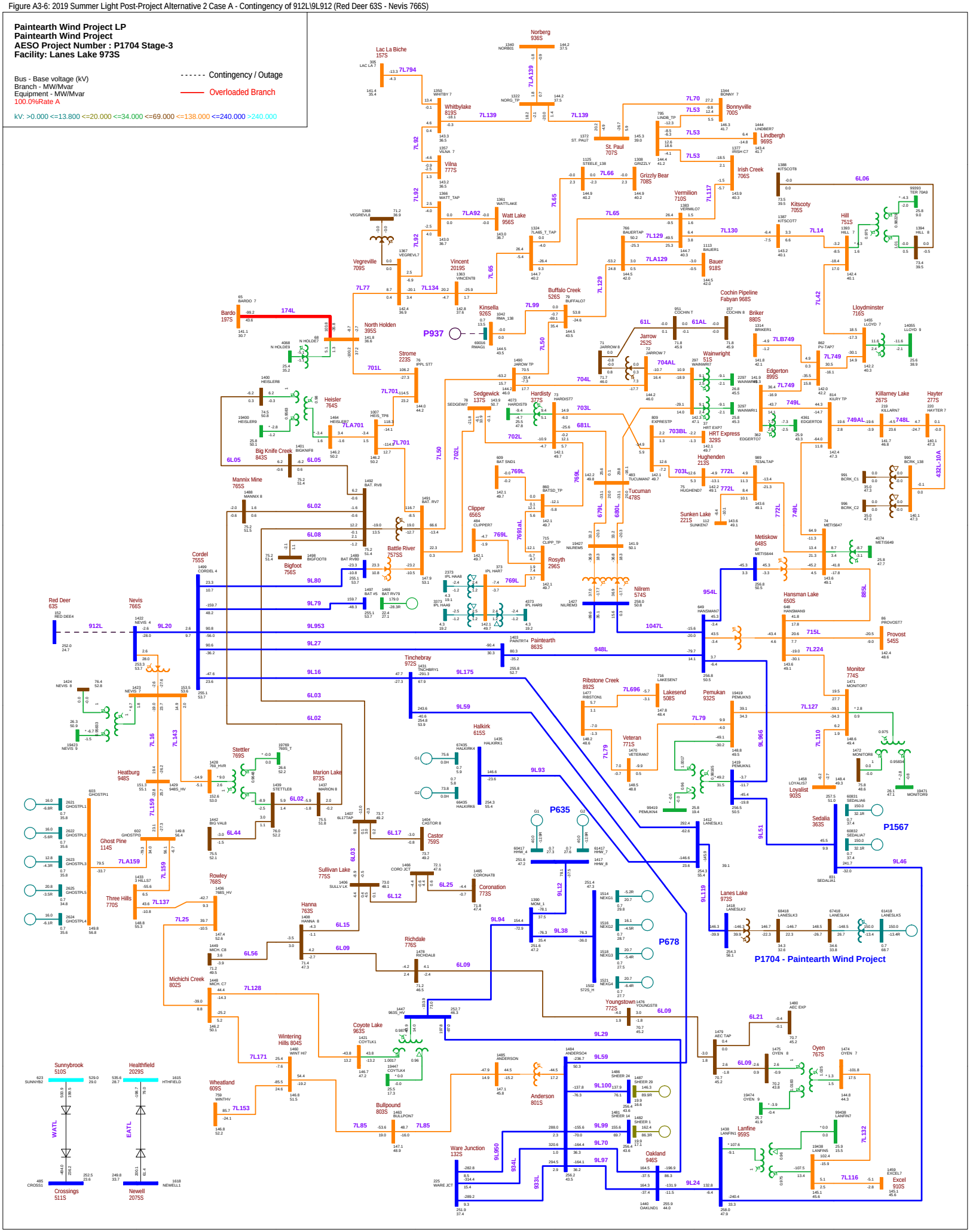

Figure A3-7: 2019 Summer Light Post-Project Alternative 2 Case B - N-0 (System Normal Condition)

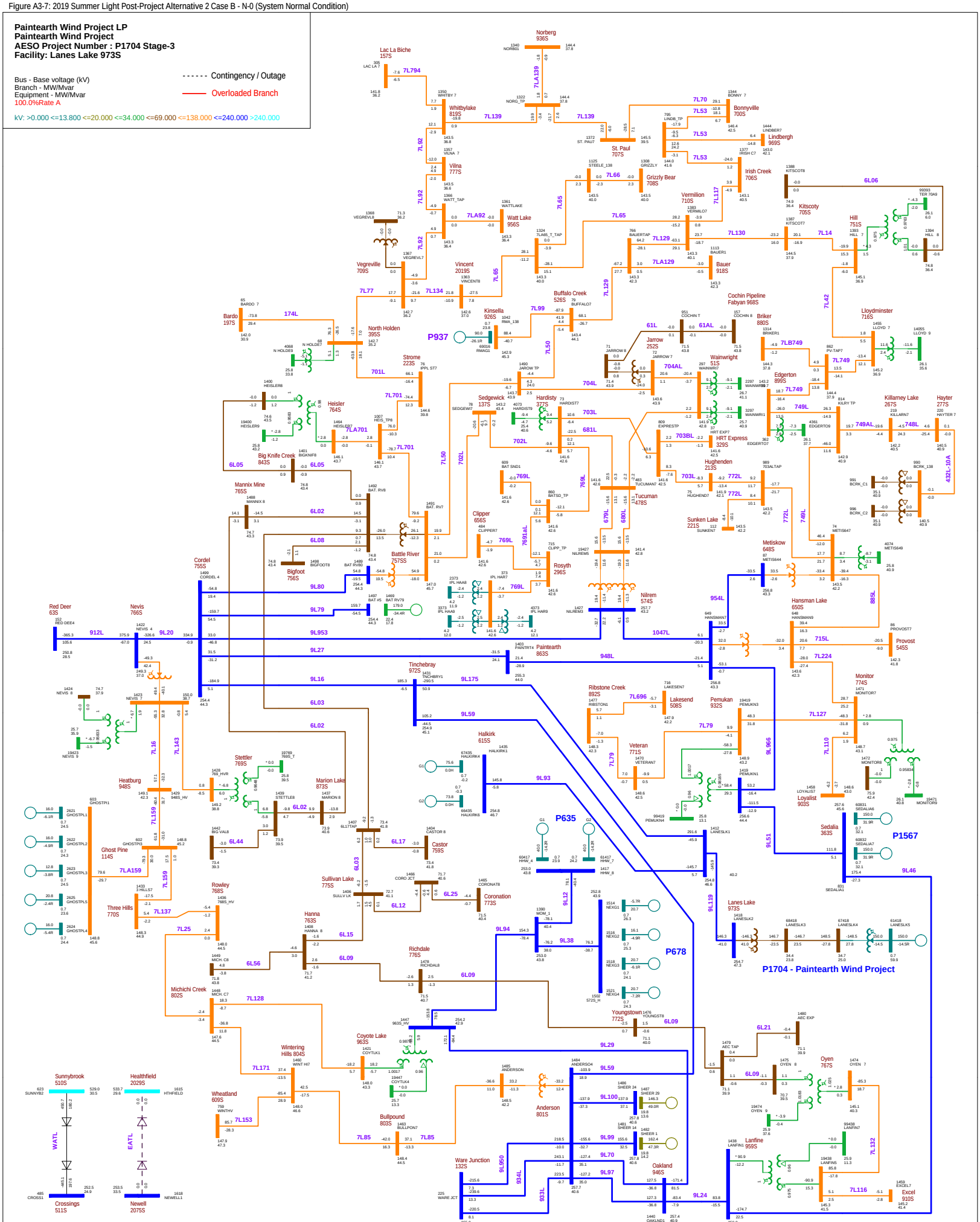

Figure A3-8: 2019 Summer Light Post-Project Alternative 2 Case B - Contingency of 766S901T (Nevis 766S Transformer 901T)

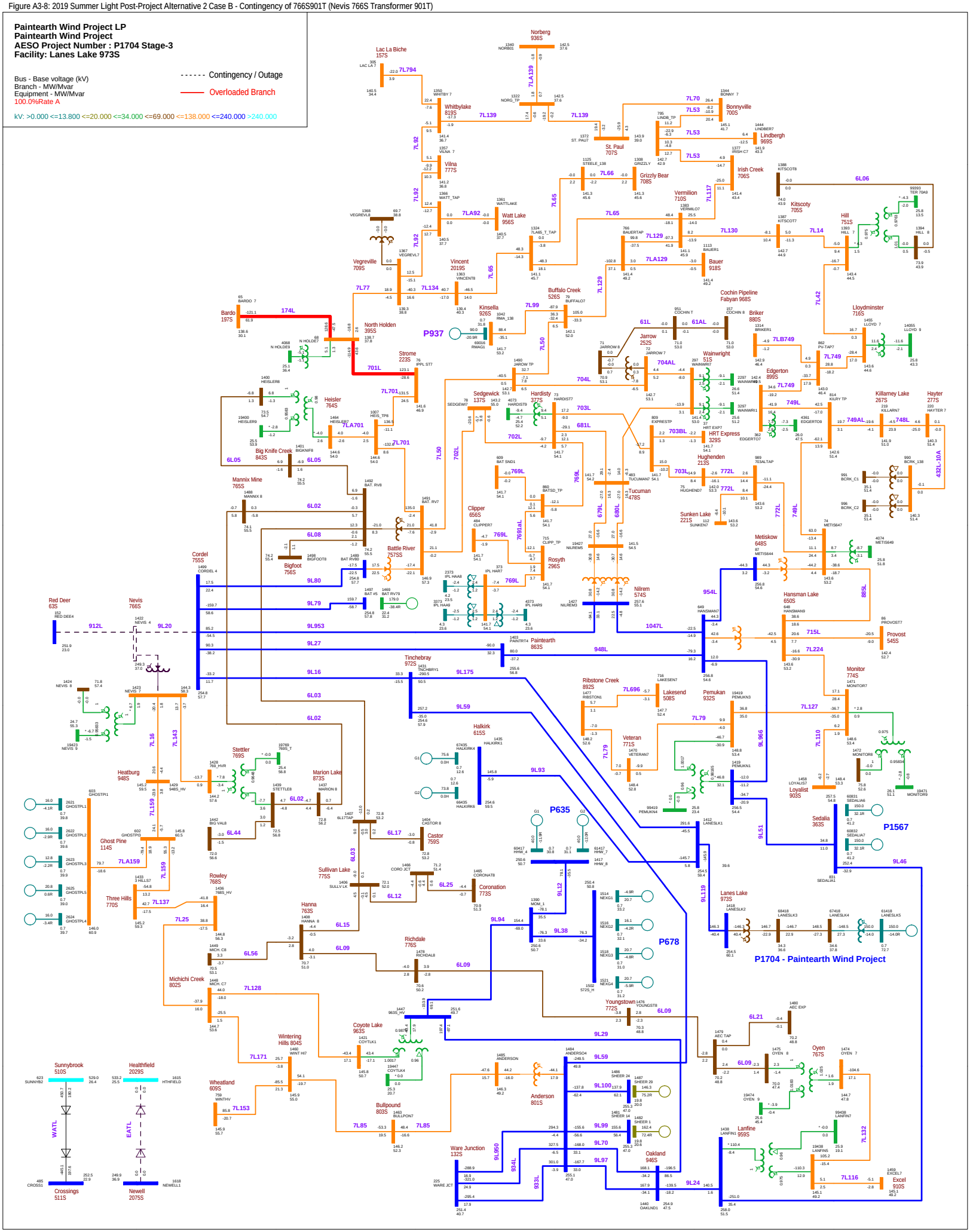

Figure A3-9: 2019 Summer Light Post-Project Alternative 2 Case B - Contingency of 912L\9L912 (Red Deer 63S - Nevis 766S)

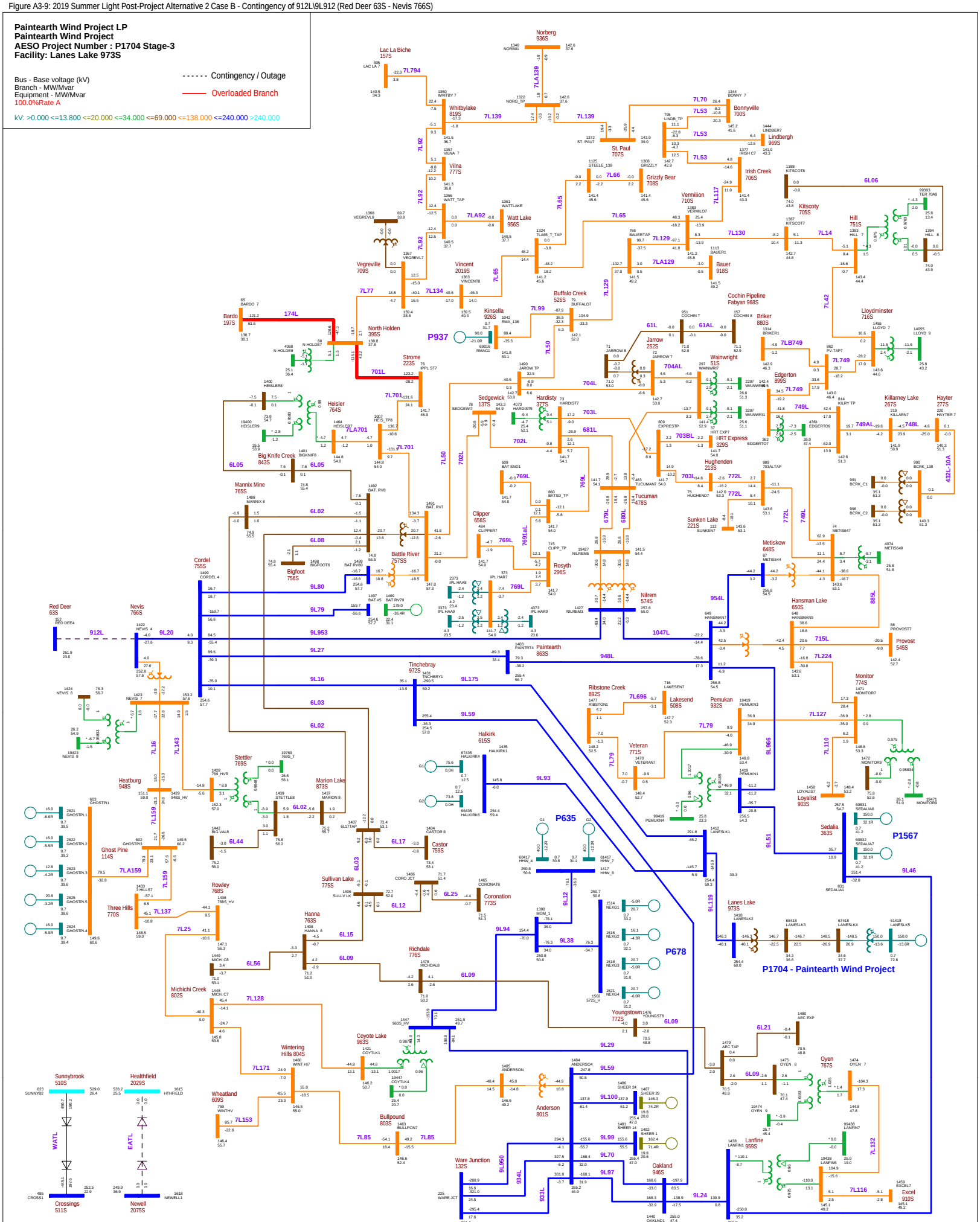

Figure A3-10: 2019 Summer Light Post-Project Alternative 2 Case B - Contingency of 9L20 (Nevis 766S - Cordel 755S)

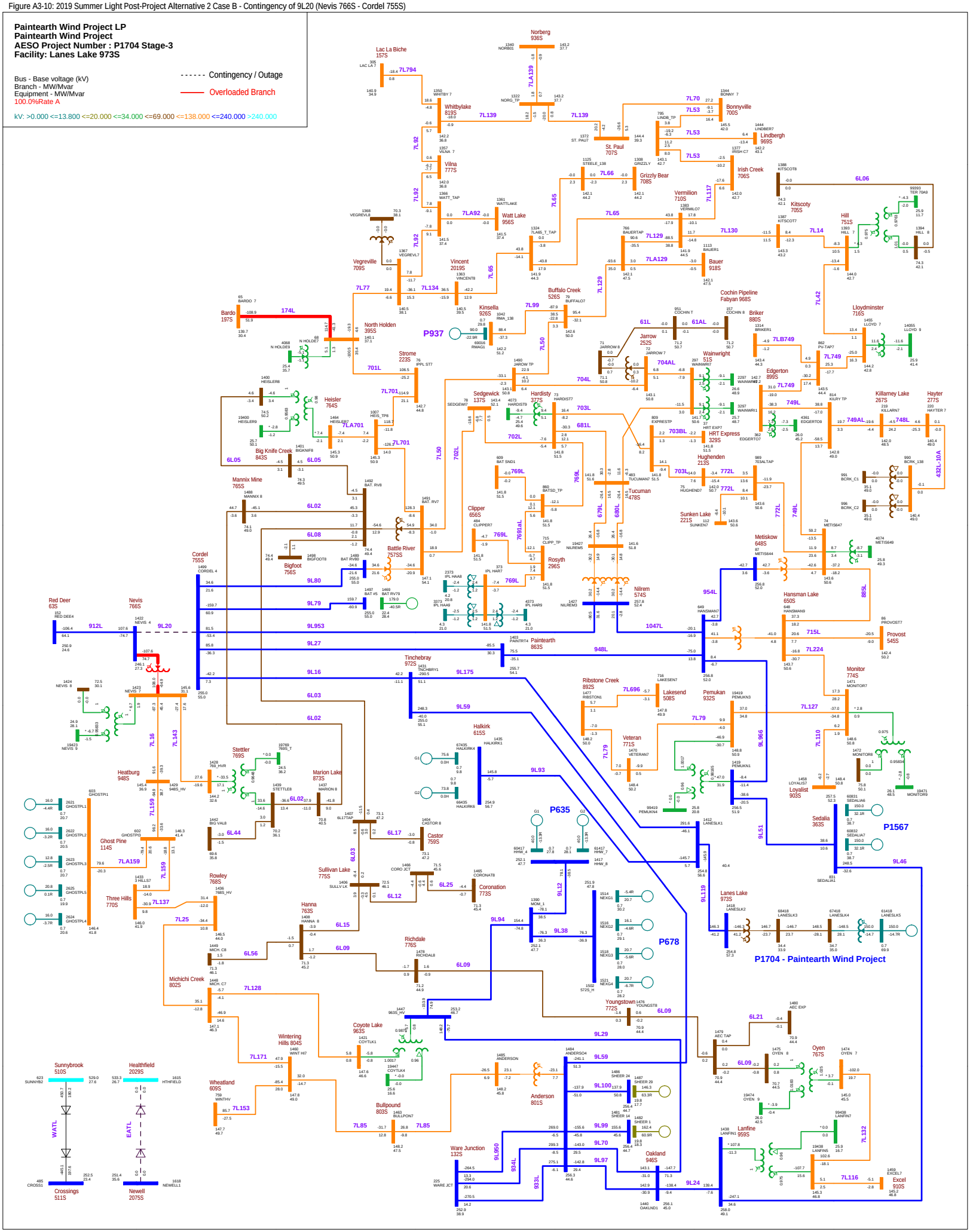

Figure A3-11: 2019 Summer Light Post-Project Alternative 2 Case B - Contingency of 9L46 (Lanfine 959S - Sedalia 363S)

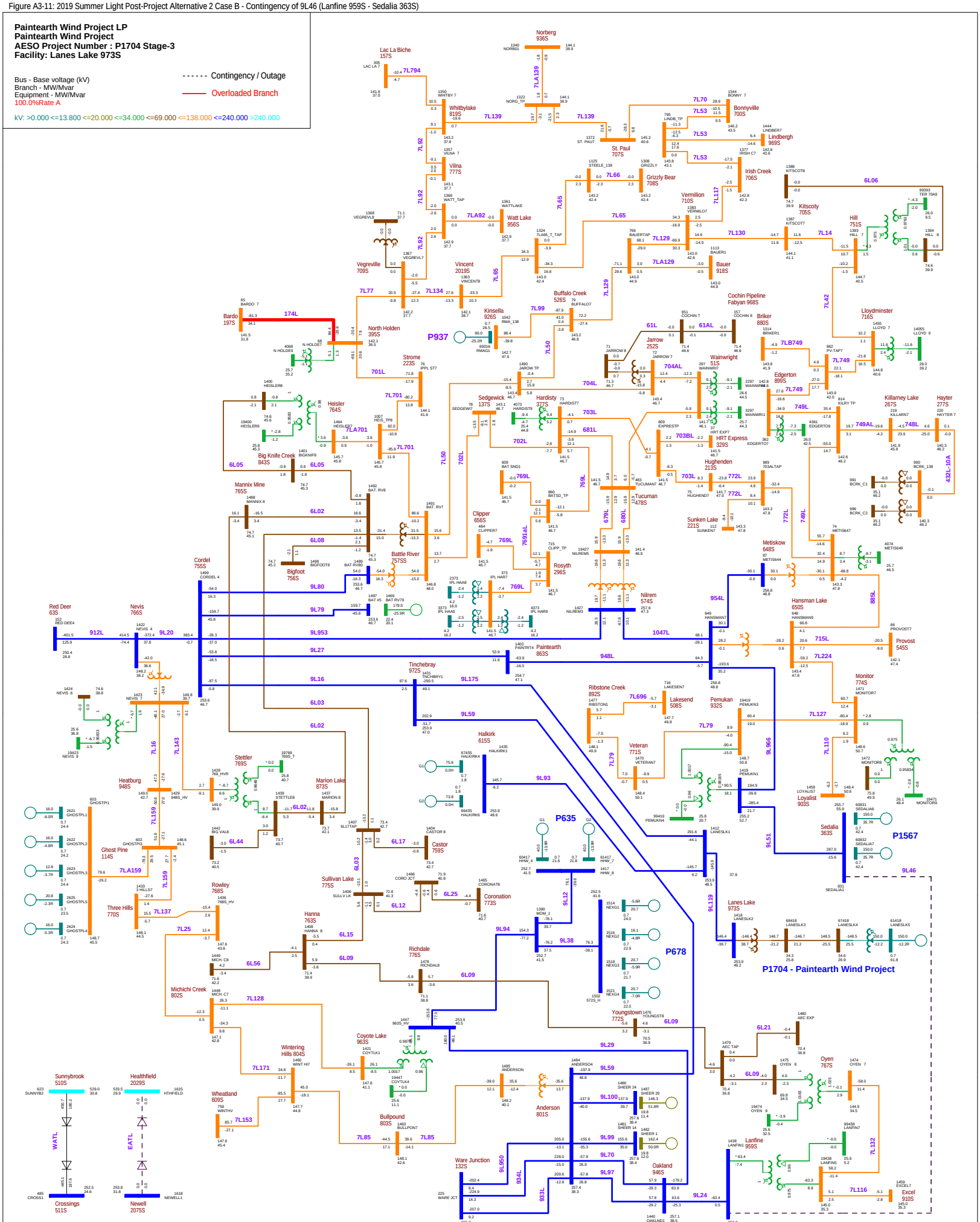

Figure A3-12: 2019 Summer Light Post-Project Alternative 2 Case B - Contingency of 9L29 (Oakland 946S - Coyote Lake 963S)

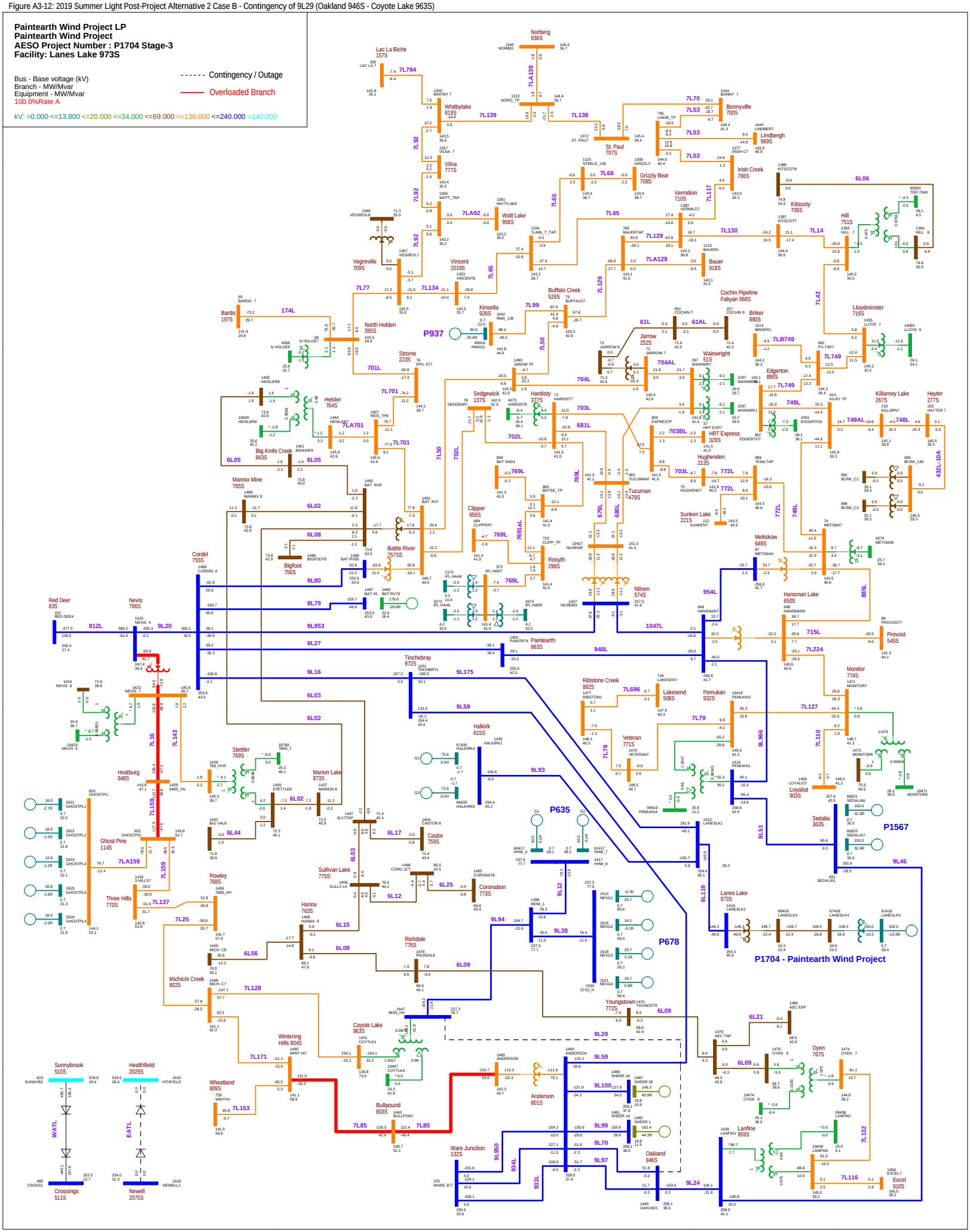

Figure A3-13: 2019 Summer Light Post-Project Alternative 2 Case B - Contingency of 648ST1 (Metiskow 648S Transformer T1)

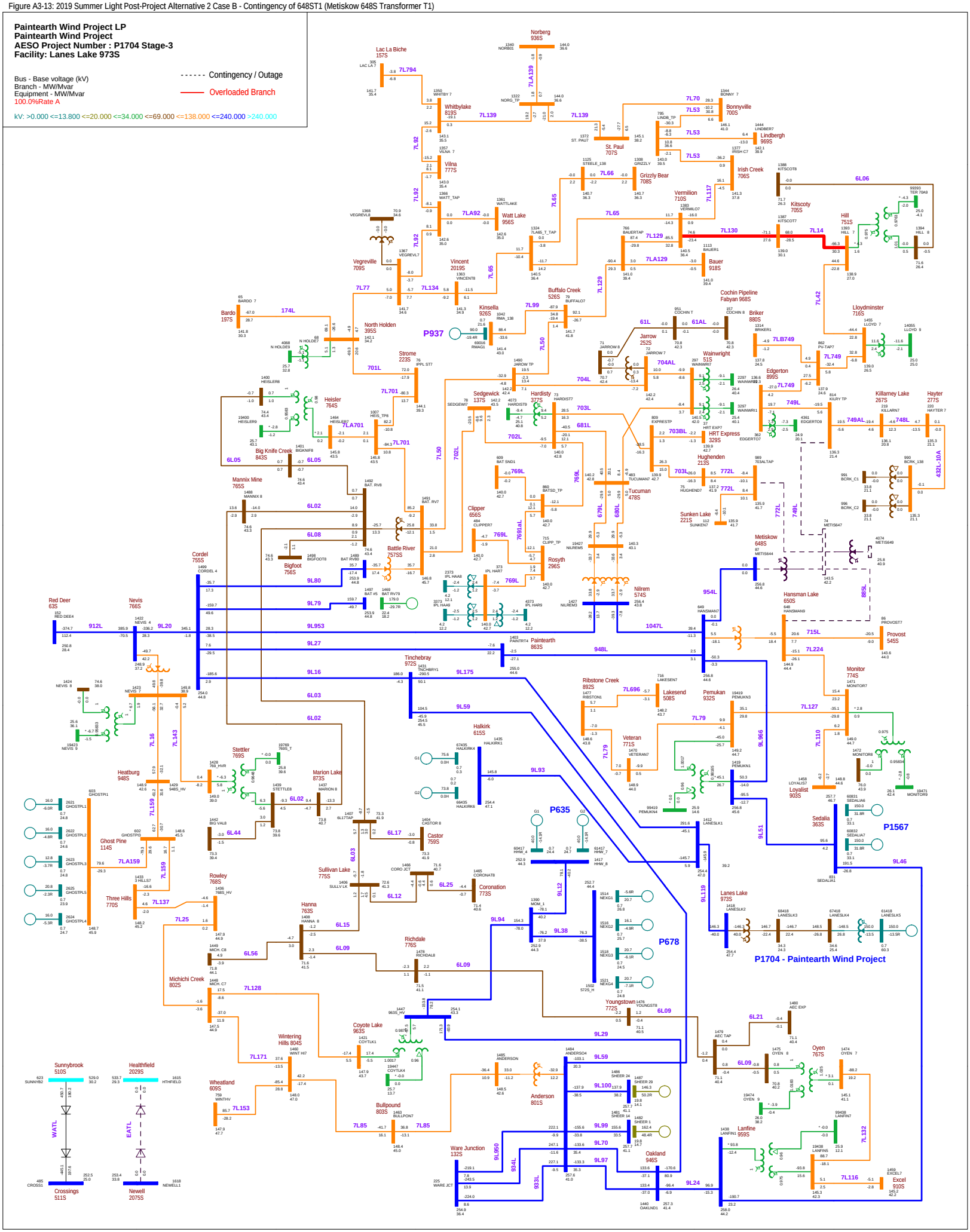

Figure A3-14: 2019 Summer Light Post-Project Alternative 2 Case B - Contingency of 757S912T (Battle River 757S Transformer 912T)

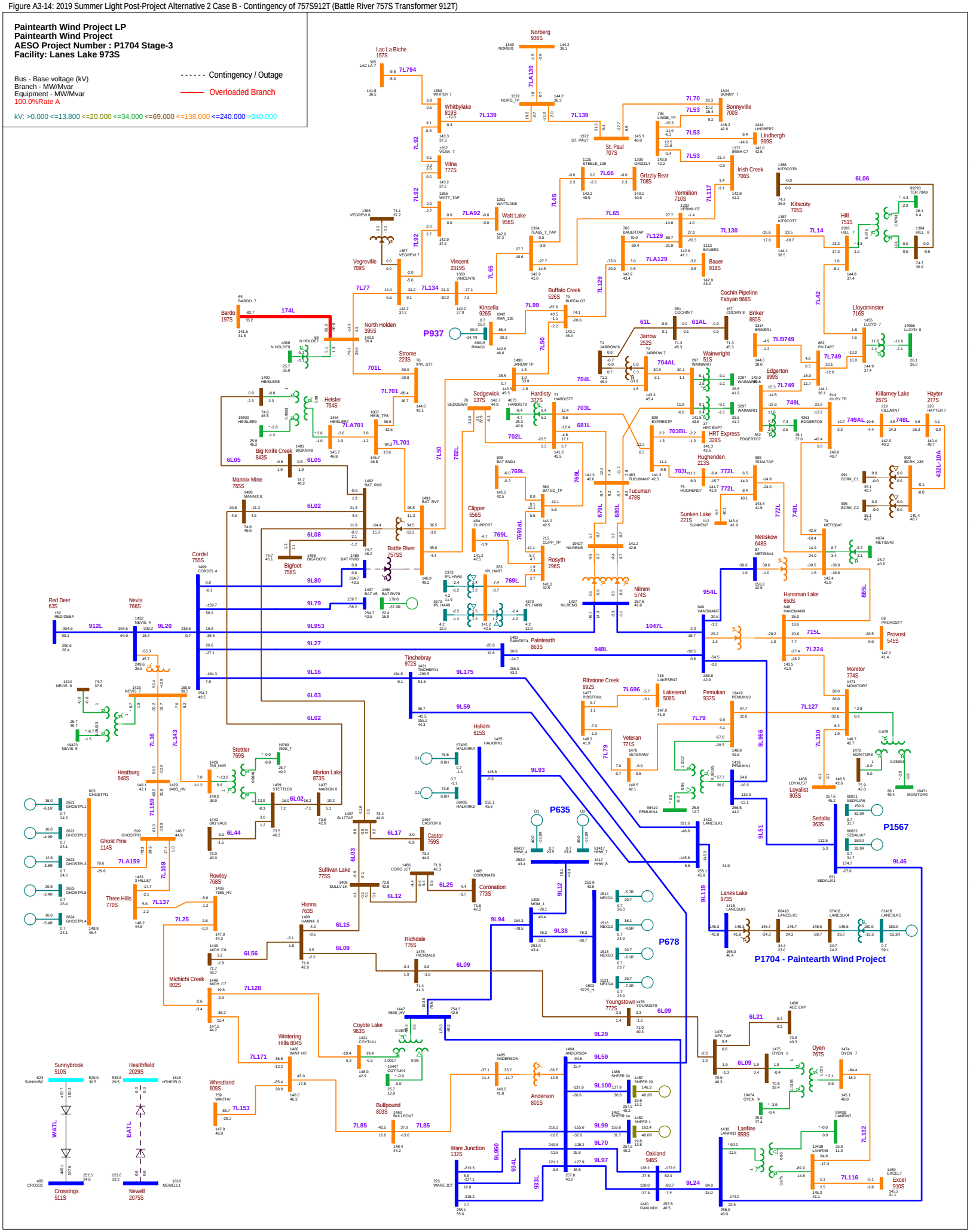

Figure A3-15: 2019 Summer Light Post-Project Alternative 2 Case B - Contingency of 9L80 (Battle River 757S - Cordel 755S)

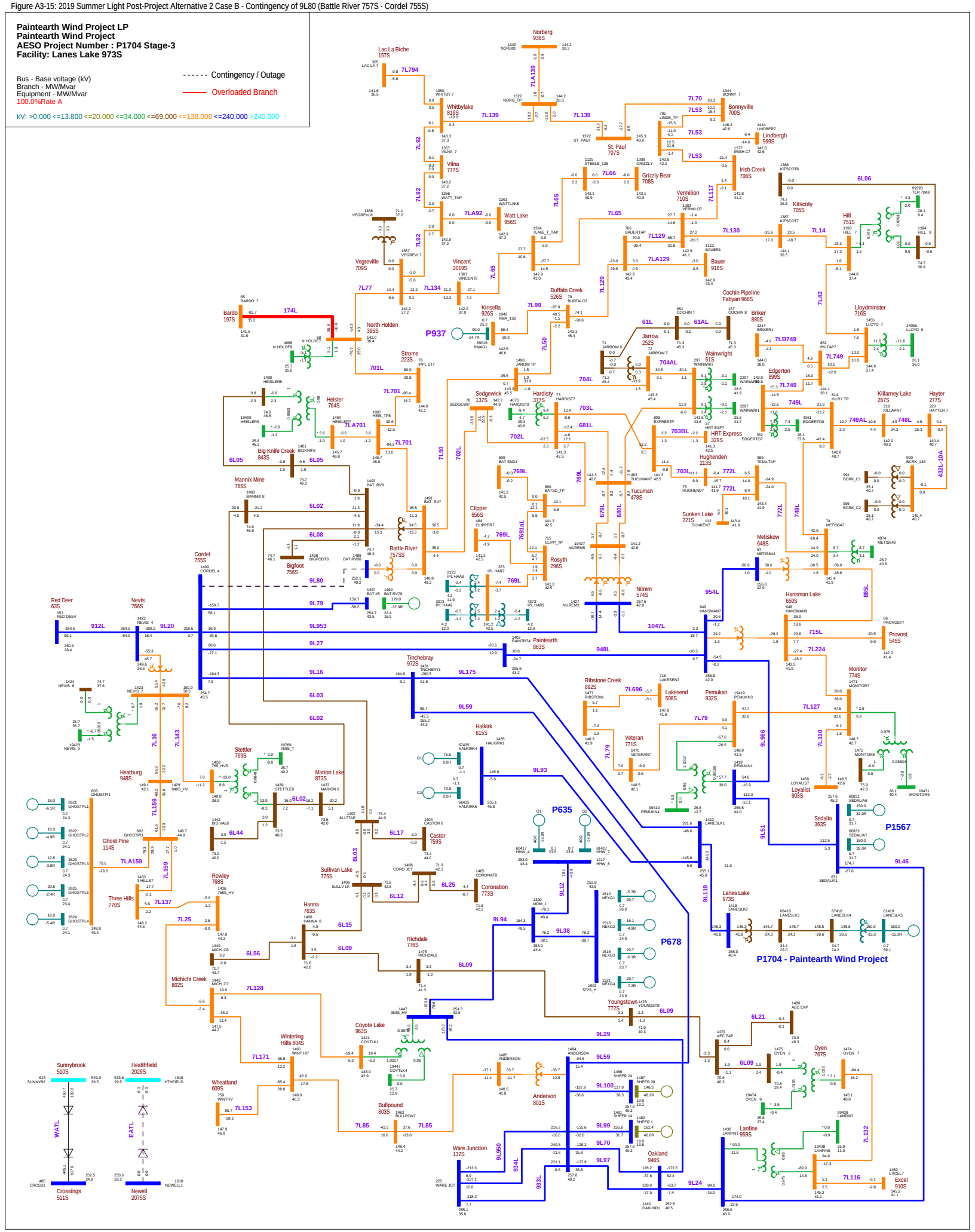

Figure A3-16: 2019 Summer Peak Post-Project Alternative 2 Case A - N-0 (System Normal Condition)

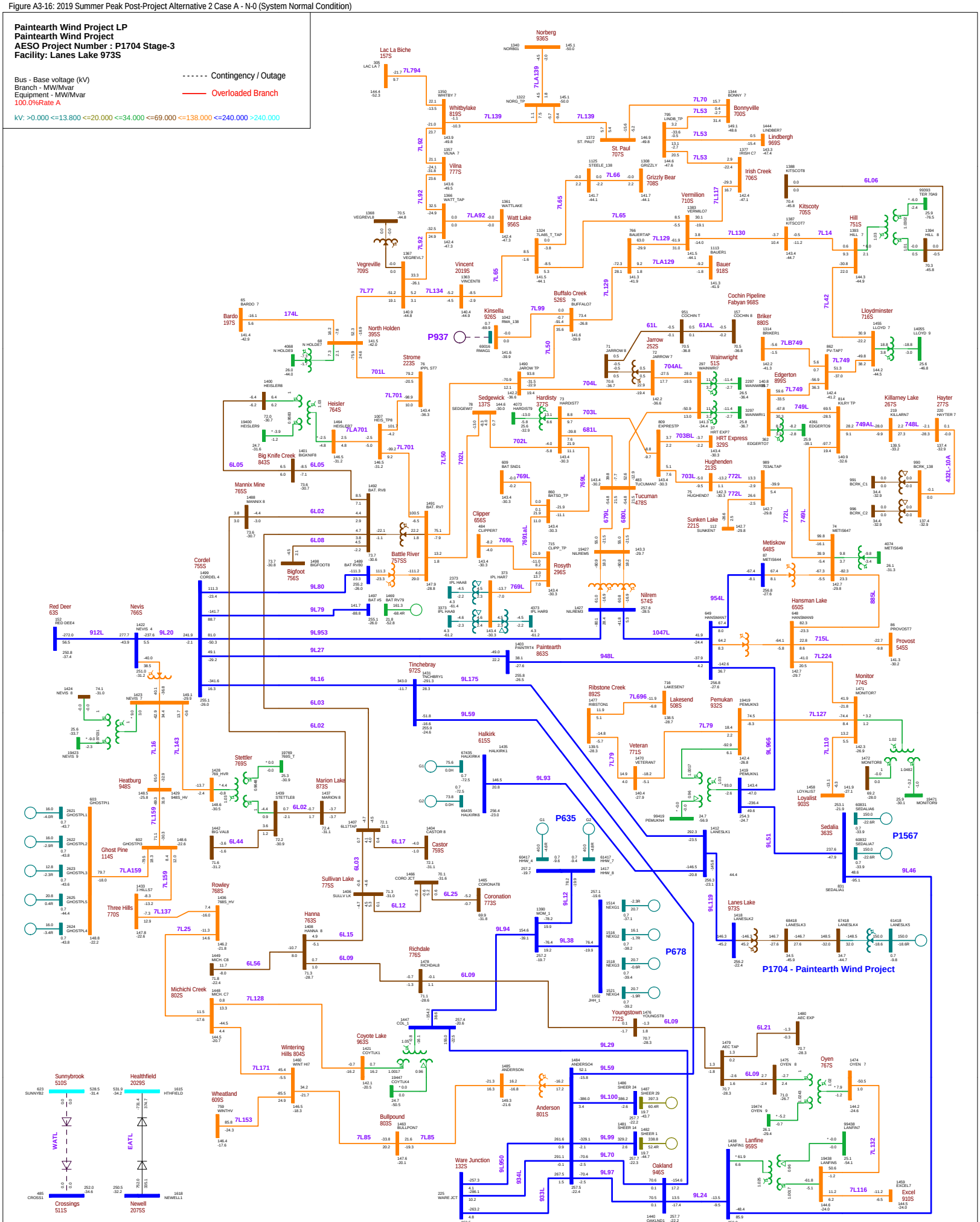

Figure A3-17: 2019 Summer Peak Post-Project Alternative 2 Case A - Contingency of 7L77 (North Holden 395S - Vegreville 709S)

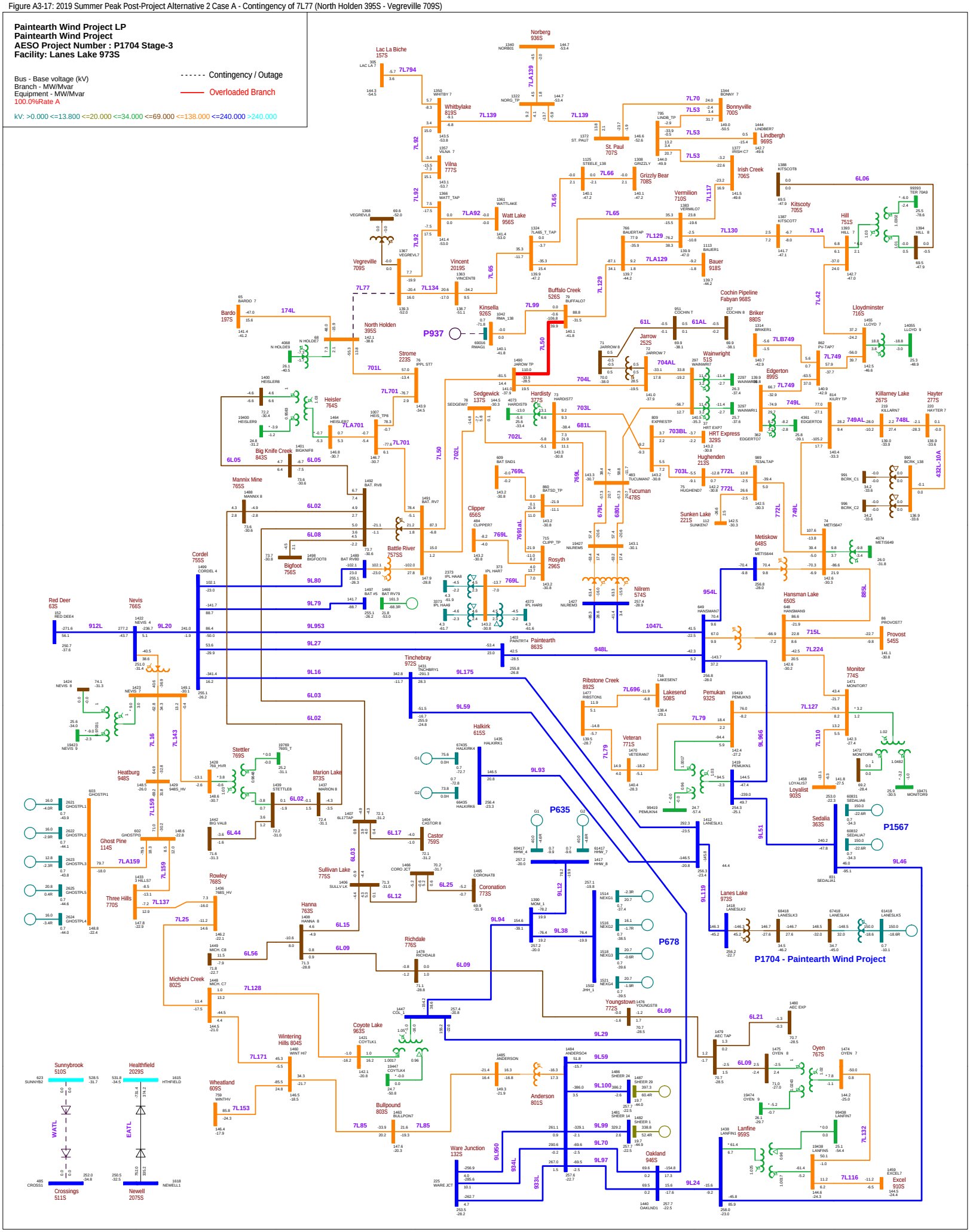

Figure A3-18: 2019 Summer Peak Post-Project Alternative 2 Case A - Contingency of 395ST1 (North Holden 395S Transformer T1)

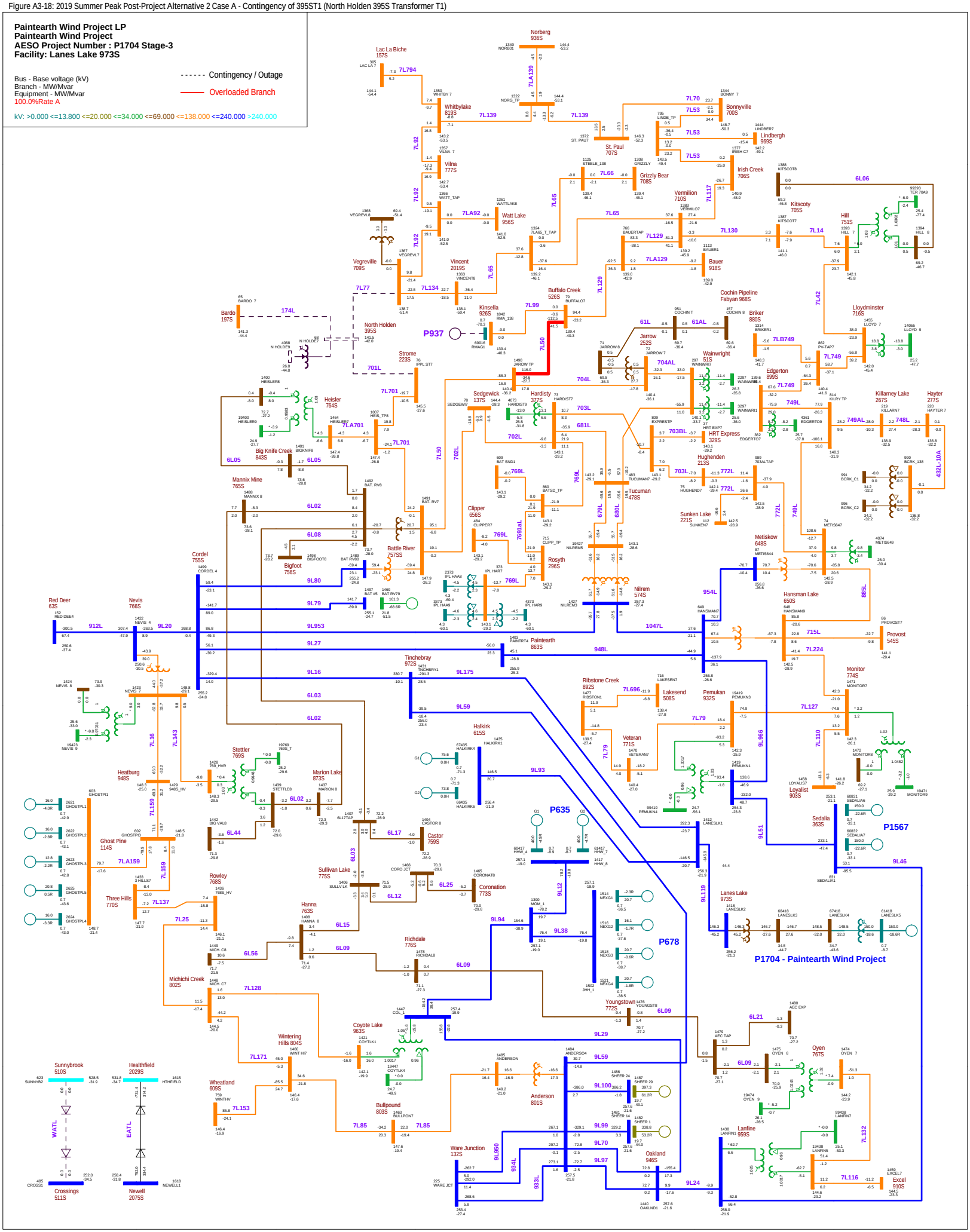

Figure A3-19: 2019 Summer Peak Post-Project Alternative 2 Case A - Contingency of 766S901T (Nevis 766S Transformer 901T)

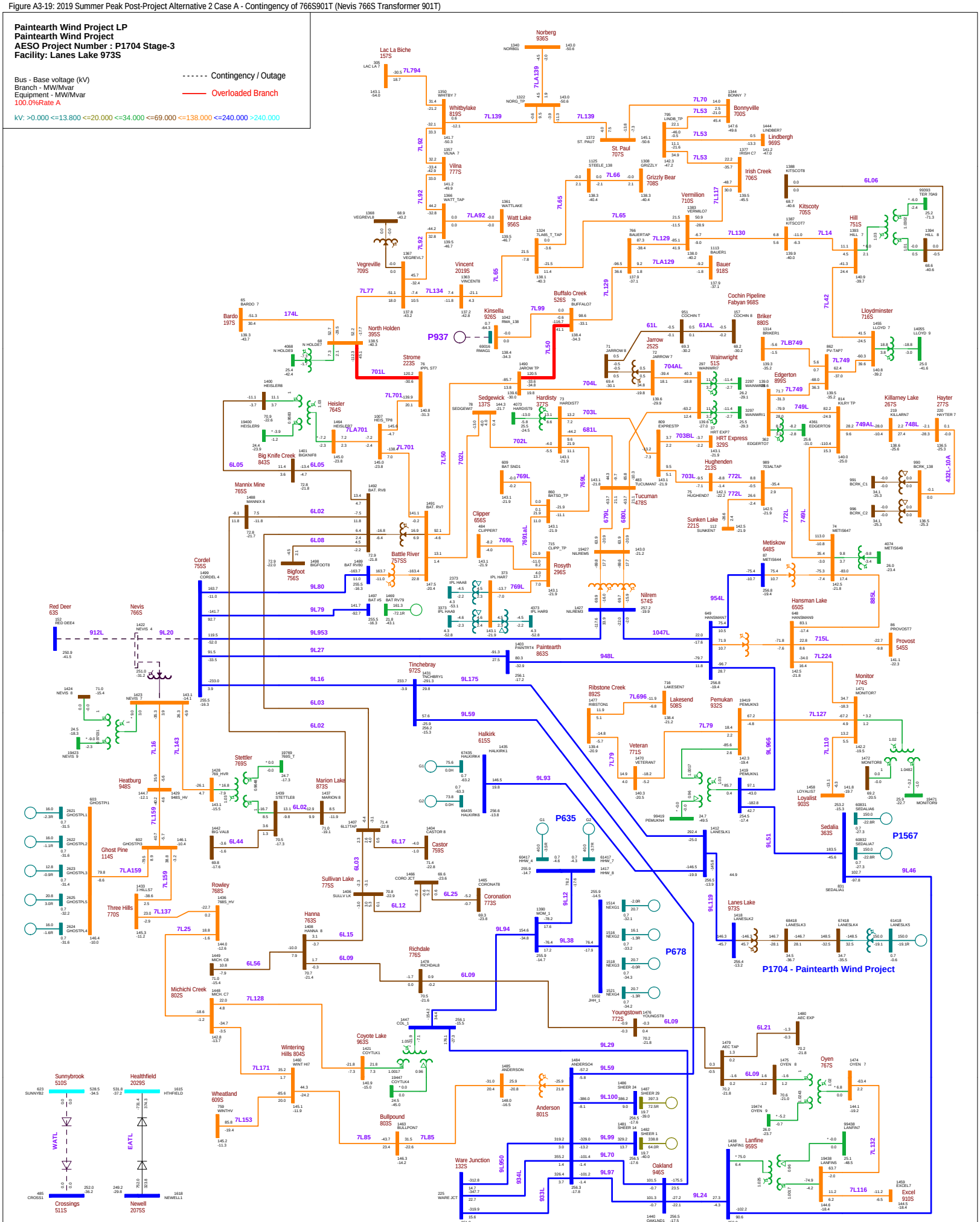

Figure A3-20: 2019 Summer Peak Post-Project Alternative 2 Case A - Contingency of 966L\9L966 (Hansman Lake 650S - Pemukan 932S)

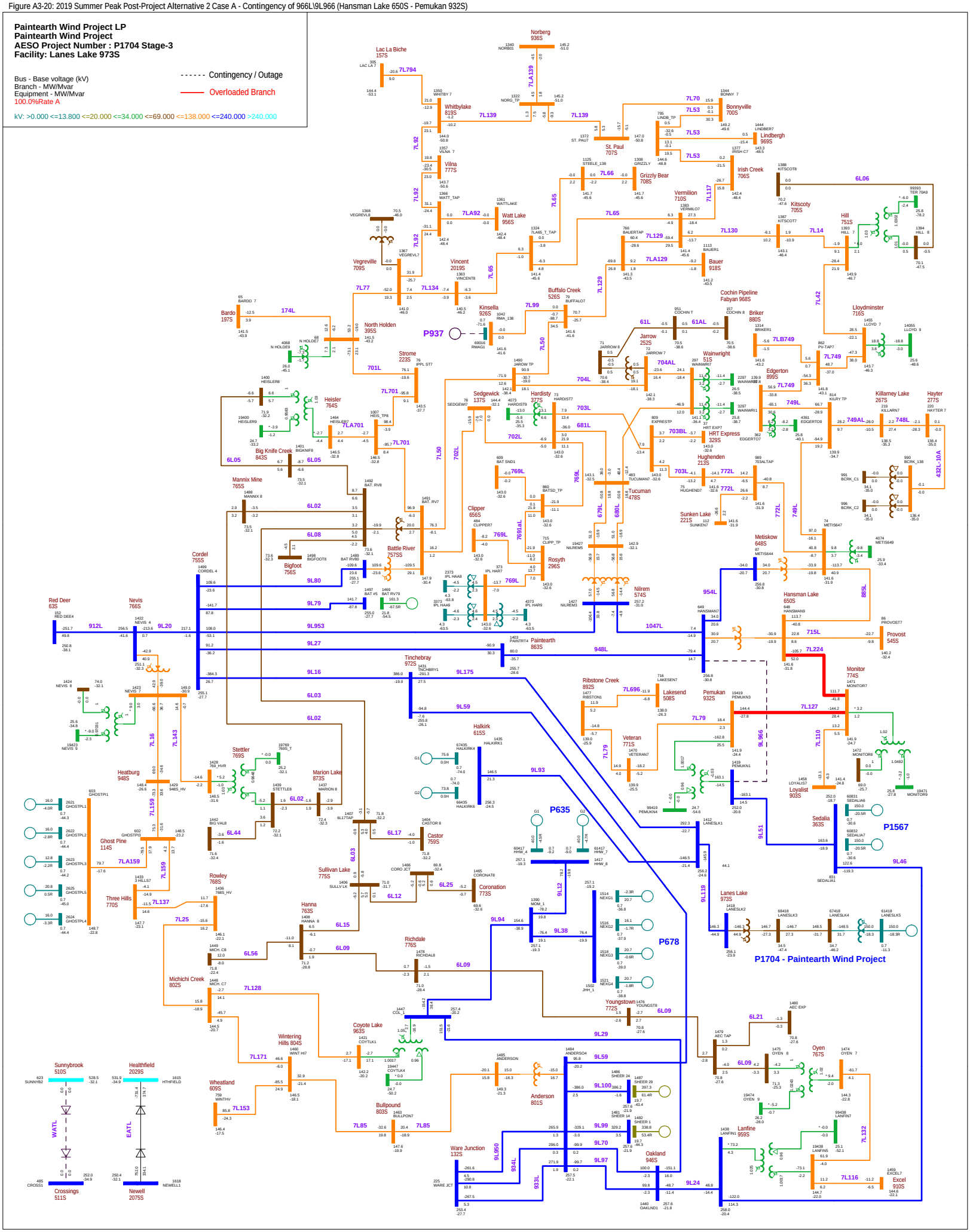

Figure A3-21: 2019 Summer Peak Post-Project Alternative 2 Case A - Contingency of 749L\749AL (Metiskow 648S - Edgerton 899S)

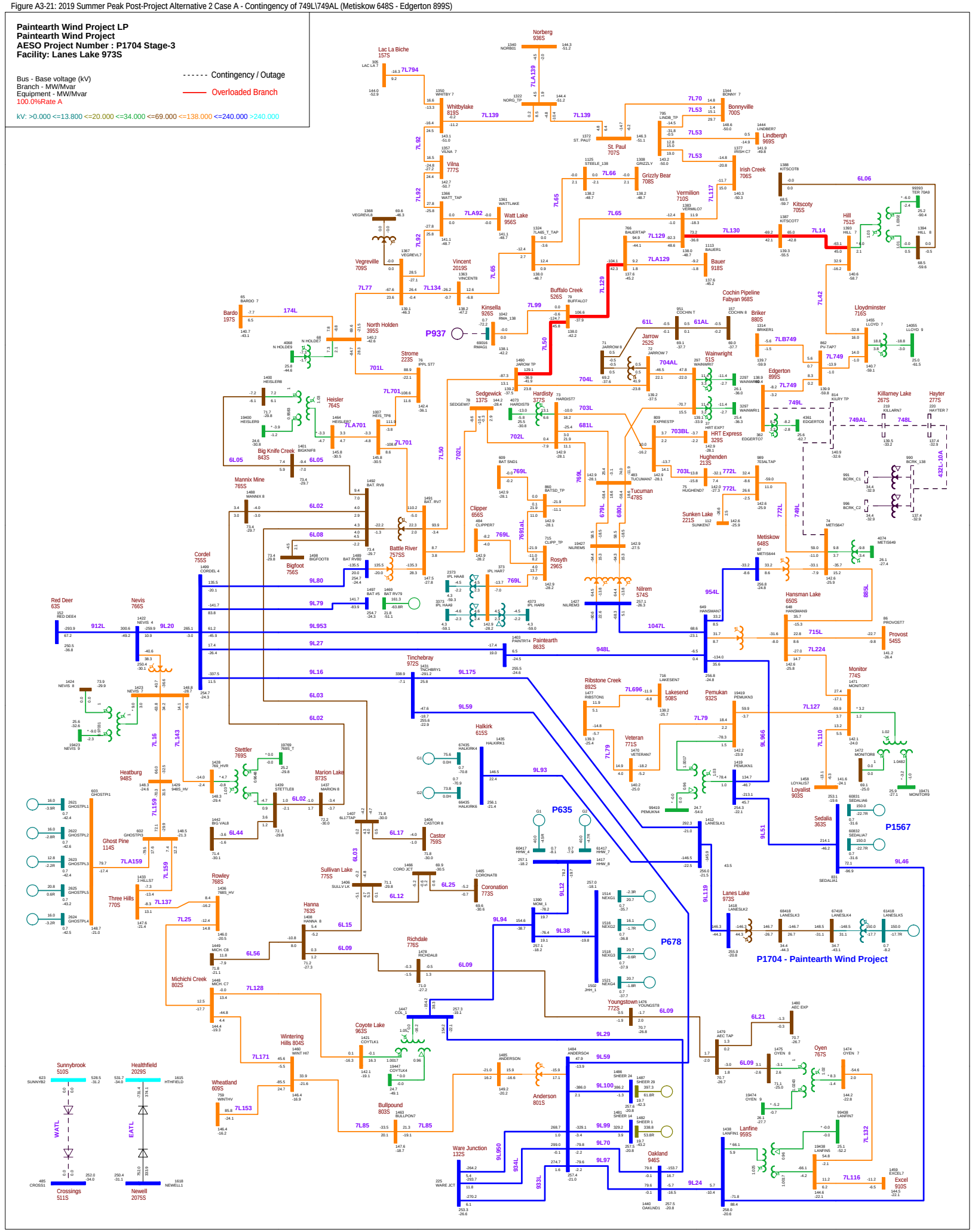

Figure A3-22: 2019 Summer Peak Post-Project Alternative 2 Case A - Contingency of 7L42 (Hill 751S - Lloydminster 716S)

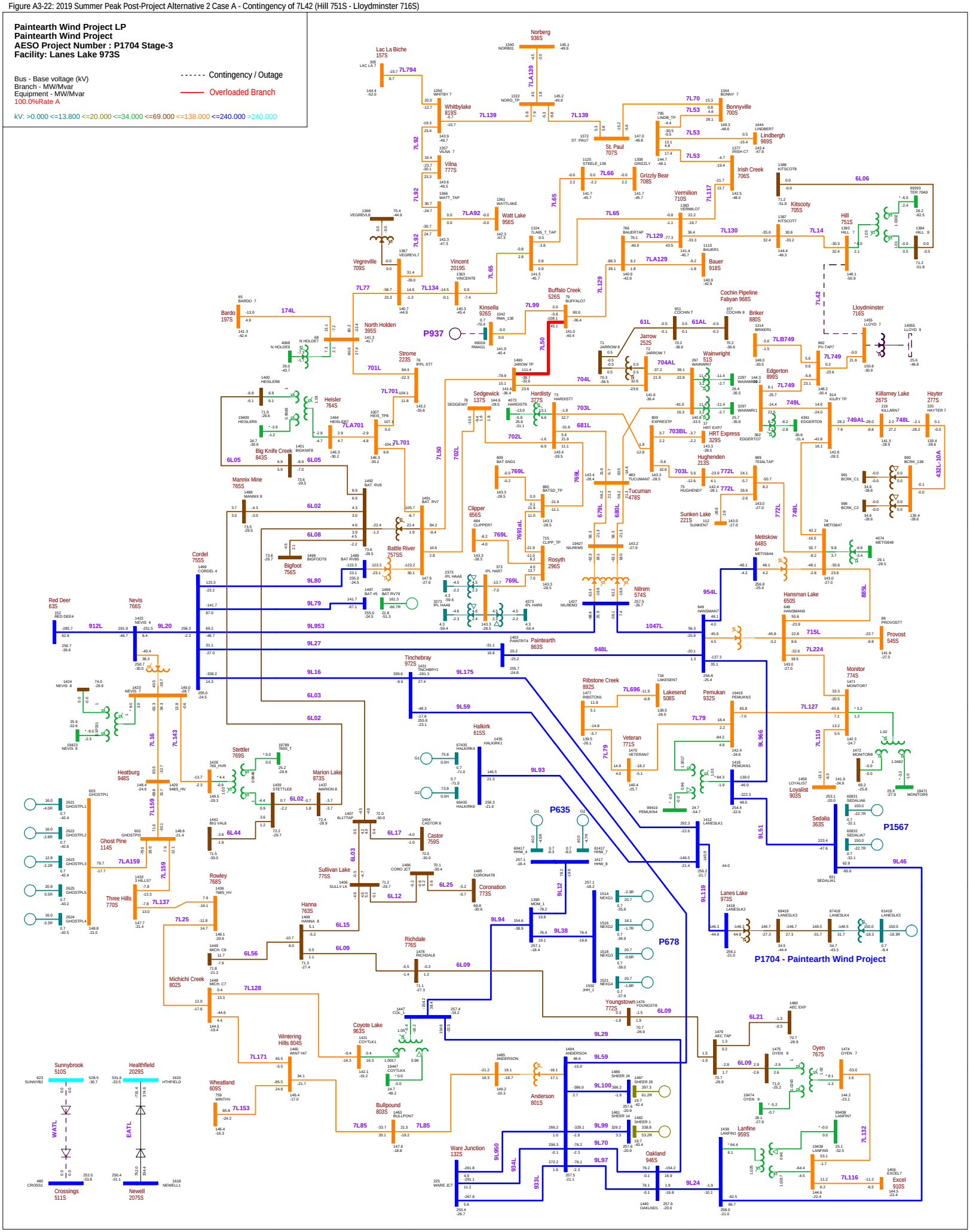

Figure A3-23: 2019 Summer Peak Post-Project Alternative 2 Case A - Contingency of 7L749\749L\7LB749 (Edgerton 899S - Briker 880S - Lloydminster 716S)

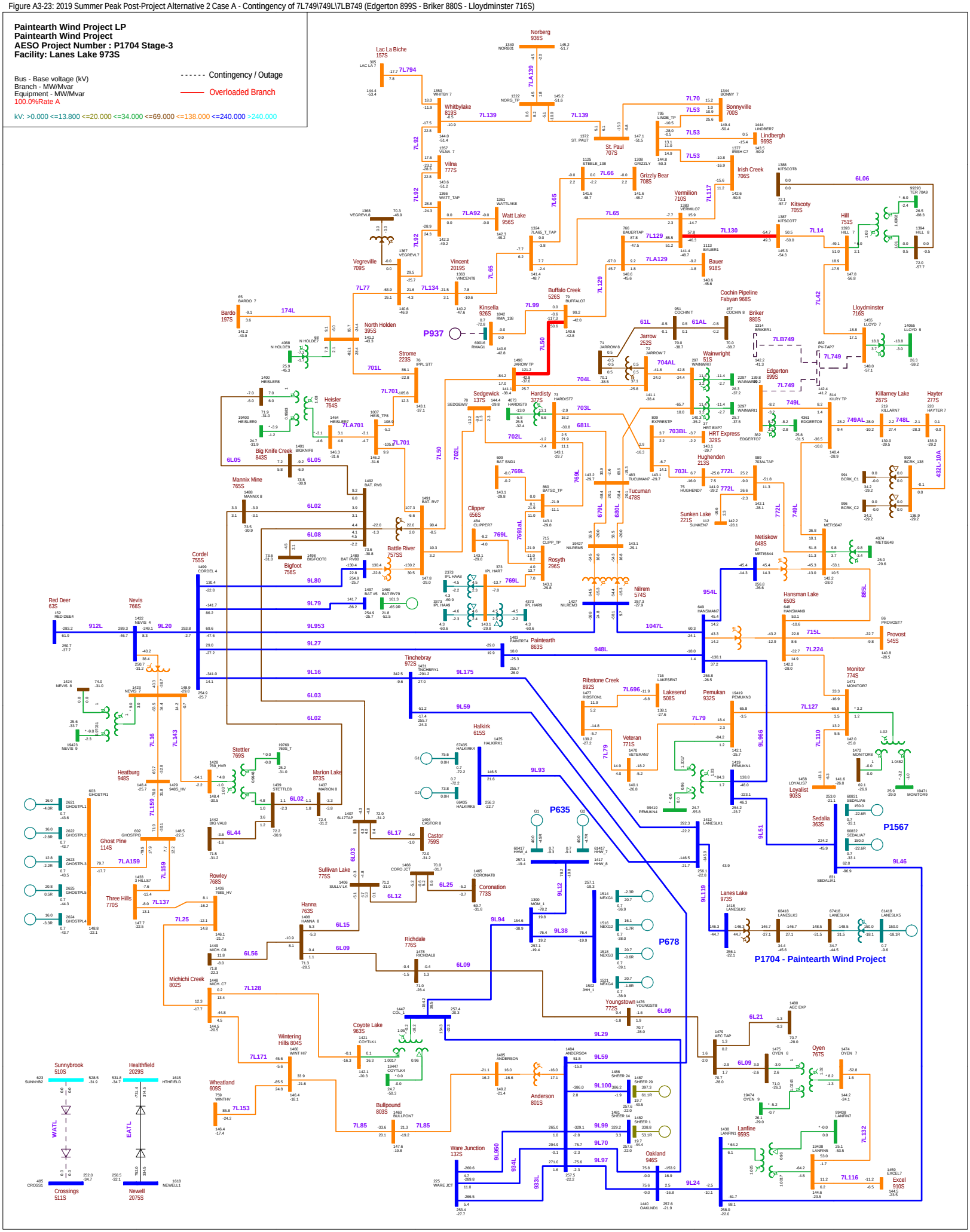

Figure A3-24: 2019 Summer Peak Post-Project Alternative 2 Case A - Contingency of 7L50 (Battle River 757S - Jarrow 252S - Buffalo Creek 526S)

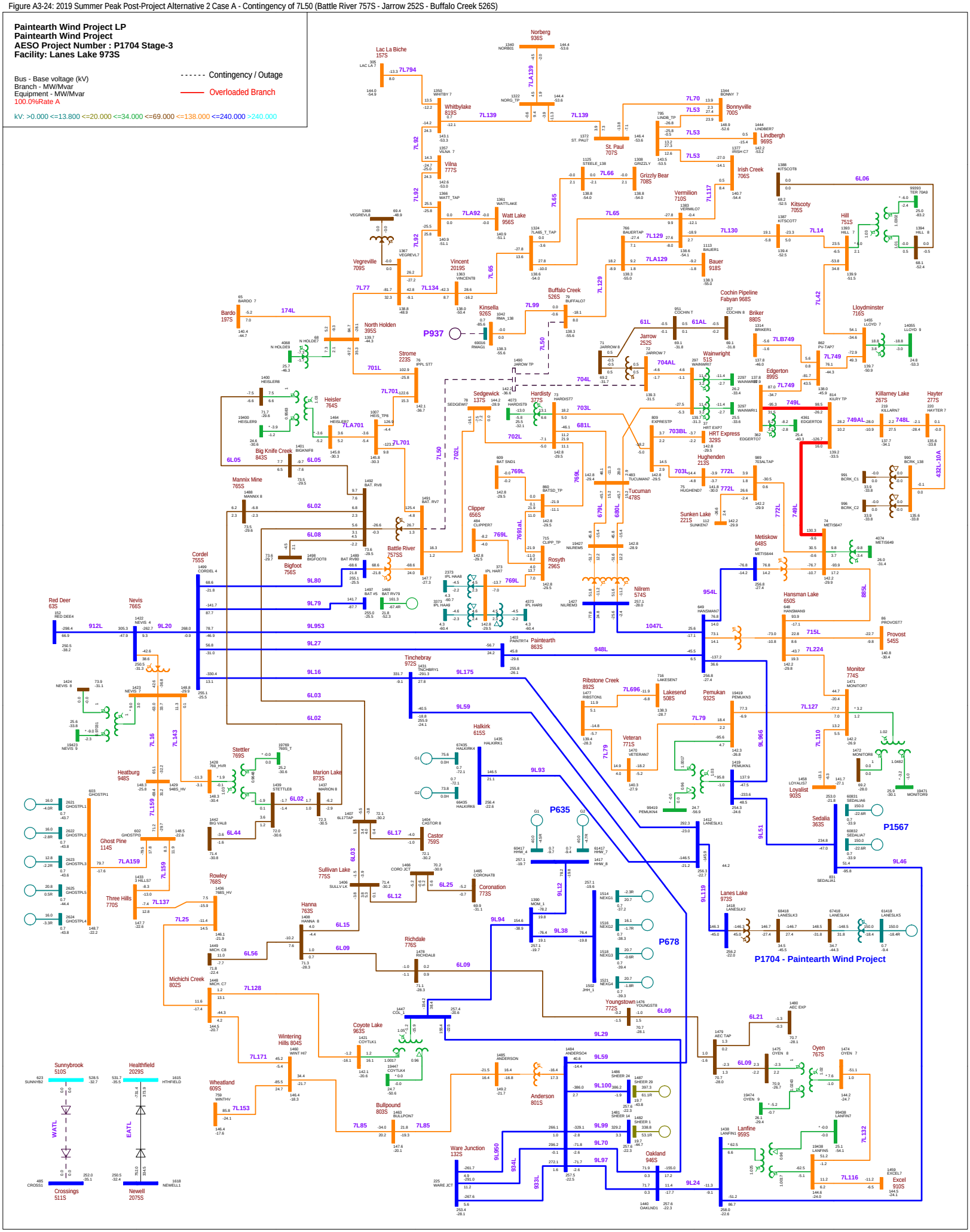

Figure A3-25: 2019 Summer Peak Post-Project Alternative 2 Case A - Contingency of EATL (Newell 2075S - Heathfield 2029S)

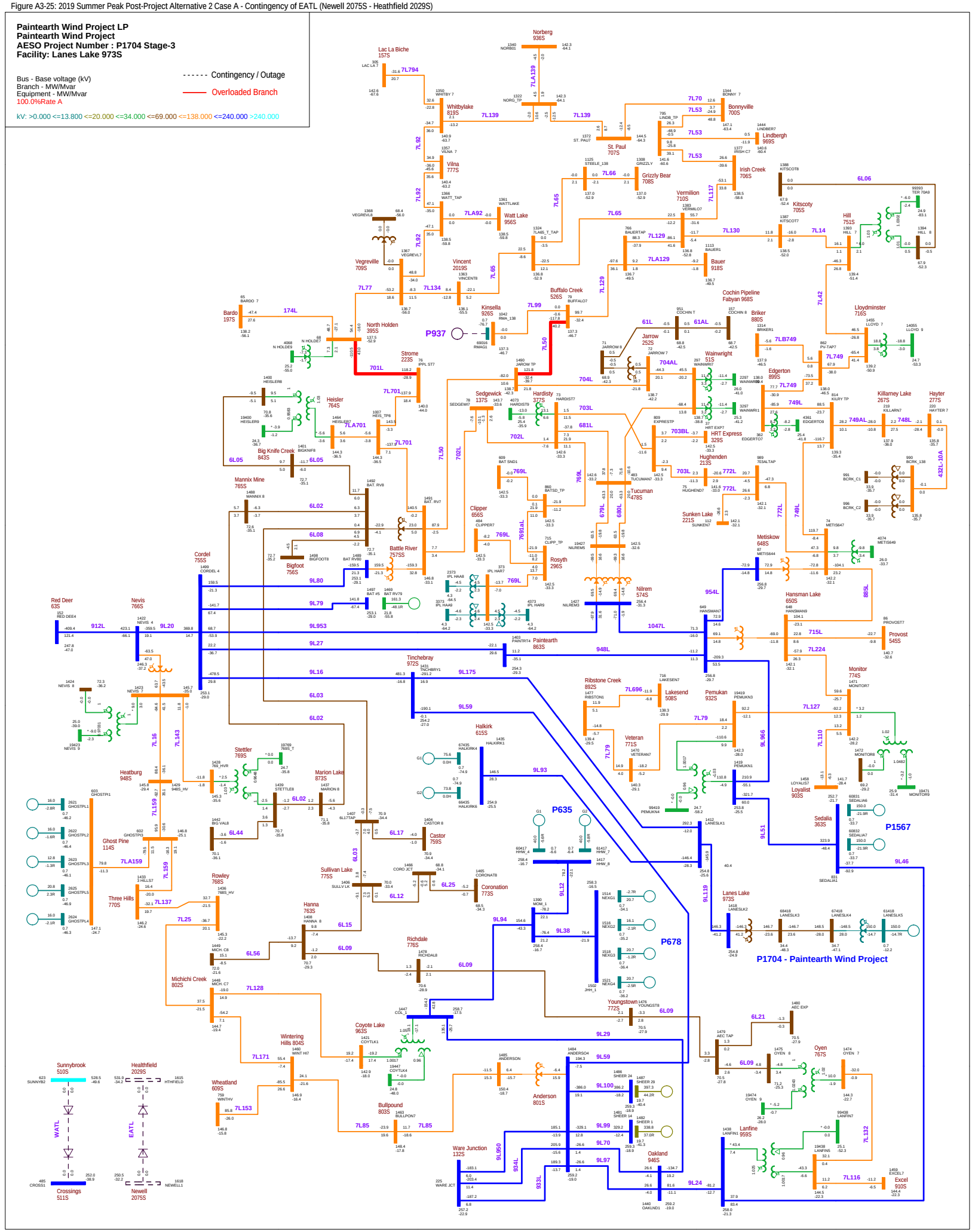

Figure A3-26: 2019 Summer Peak Post-Project Alternative 2 Case A - Contingency of 7L701\7LA701\701L (Battle River 757S - Heisler 764S - Strome 223S)

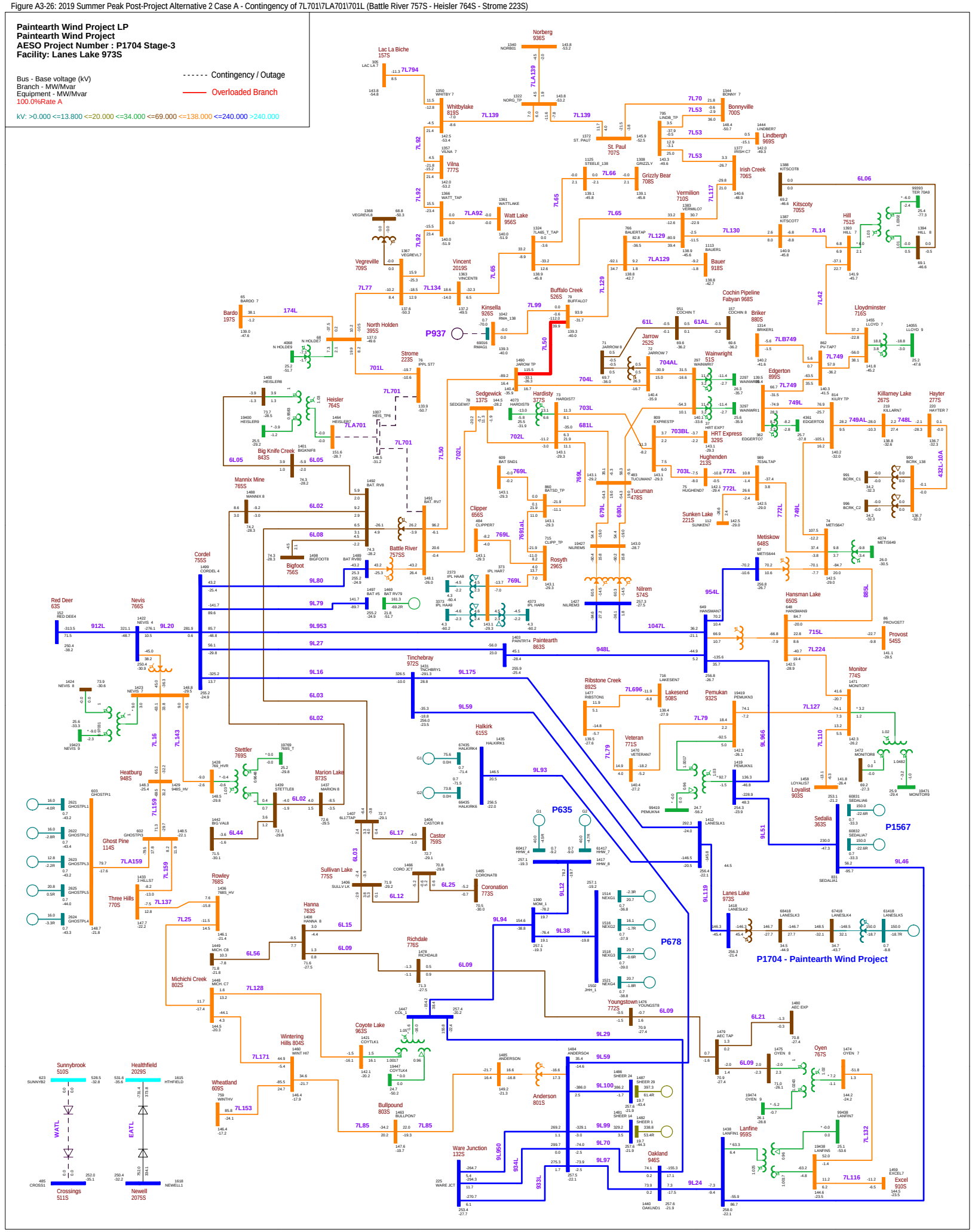

Figure A3-27: 2019 Summer Peak Post-Project Alternative 2 Case A - Contingency of 9L16 (Tinchebray 972S - Cordel 755S)

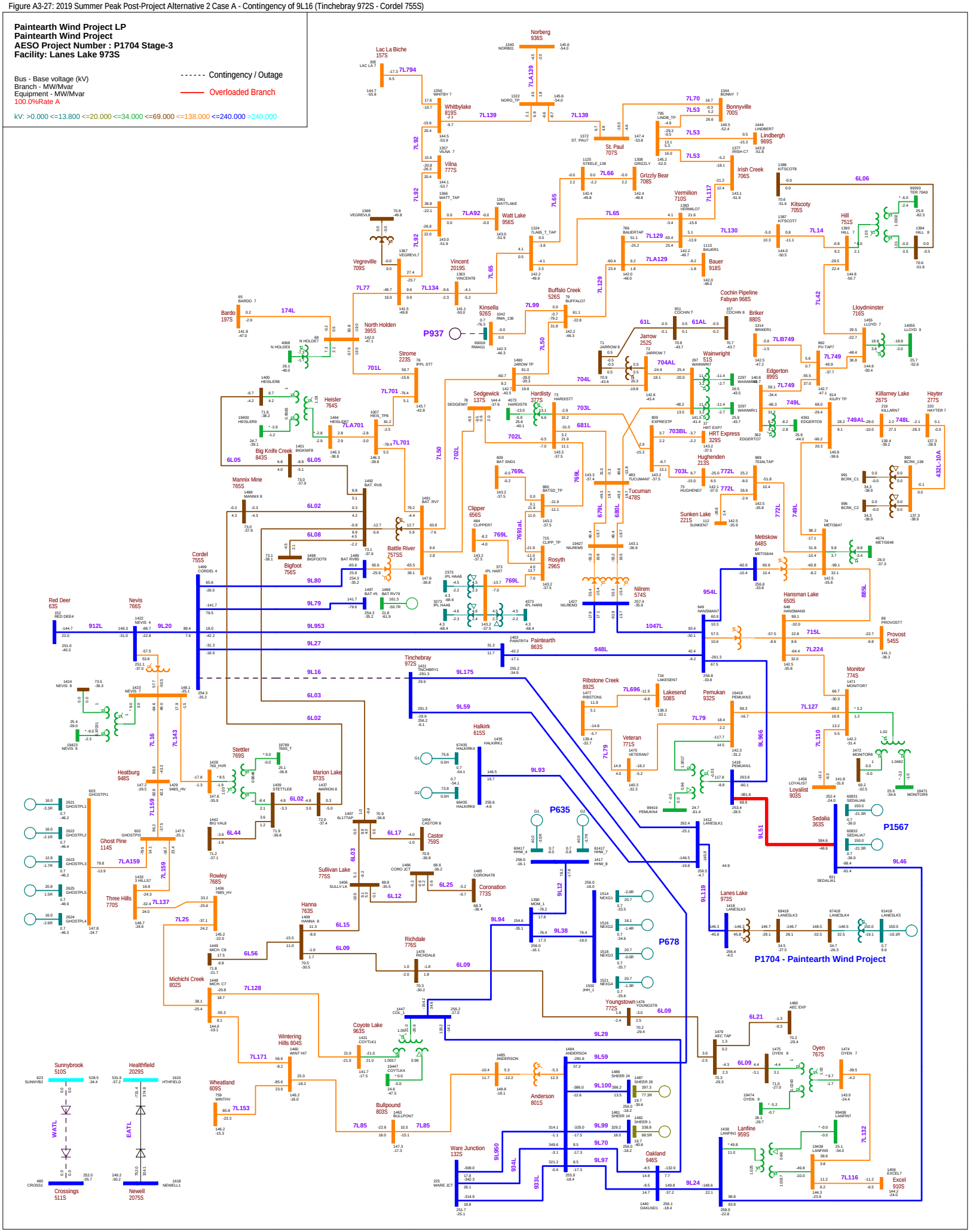

Figure A3-28: 2019 Summer Peak Post-Project Alternative 2 Case A - Contingency of 899ST3A (Edgerton 899S Transformer T3A)

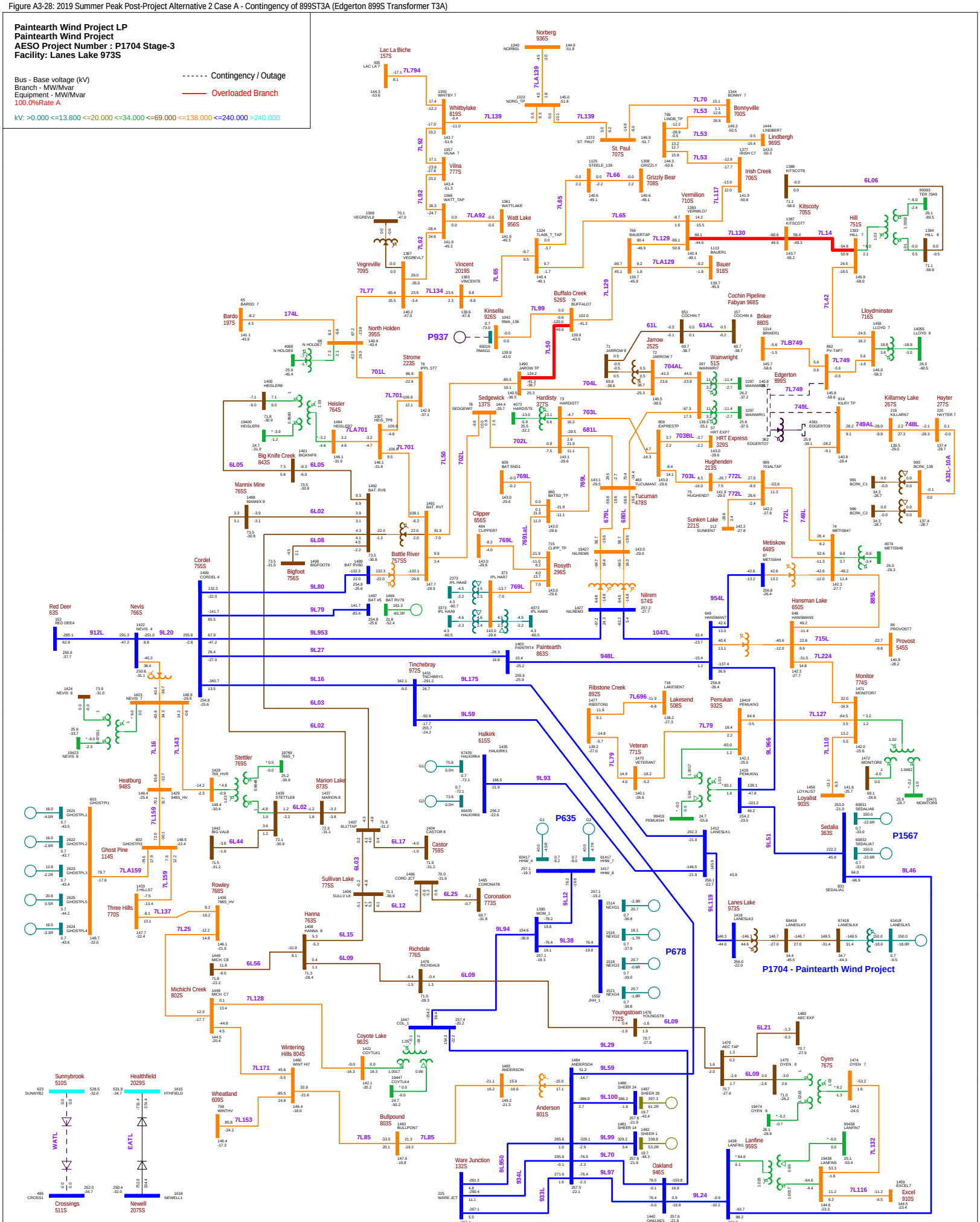

Figure A3-29: 2019 Summer Peak Post-Project Alternative 2 Case A - Contingency of 9L29 (Oakland 946S - Coyote Lake 963S)

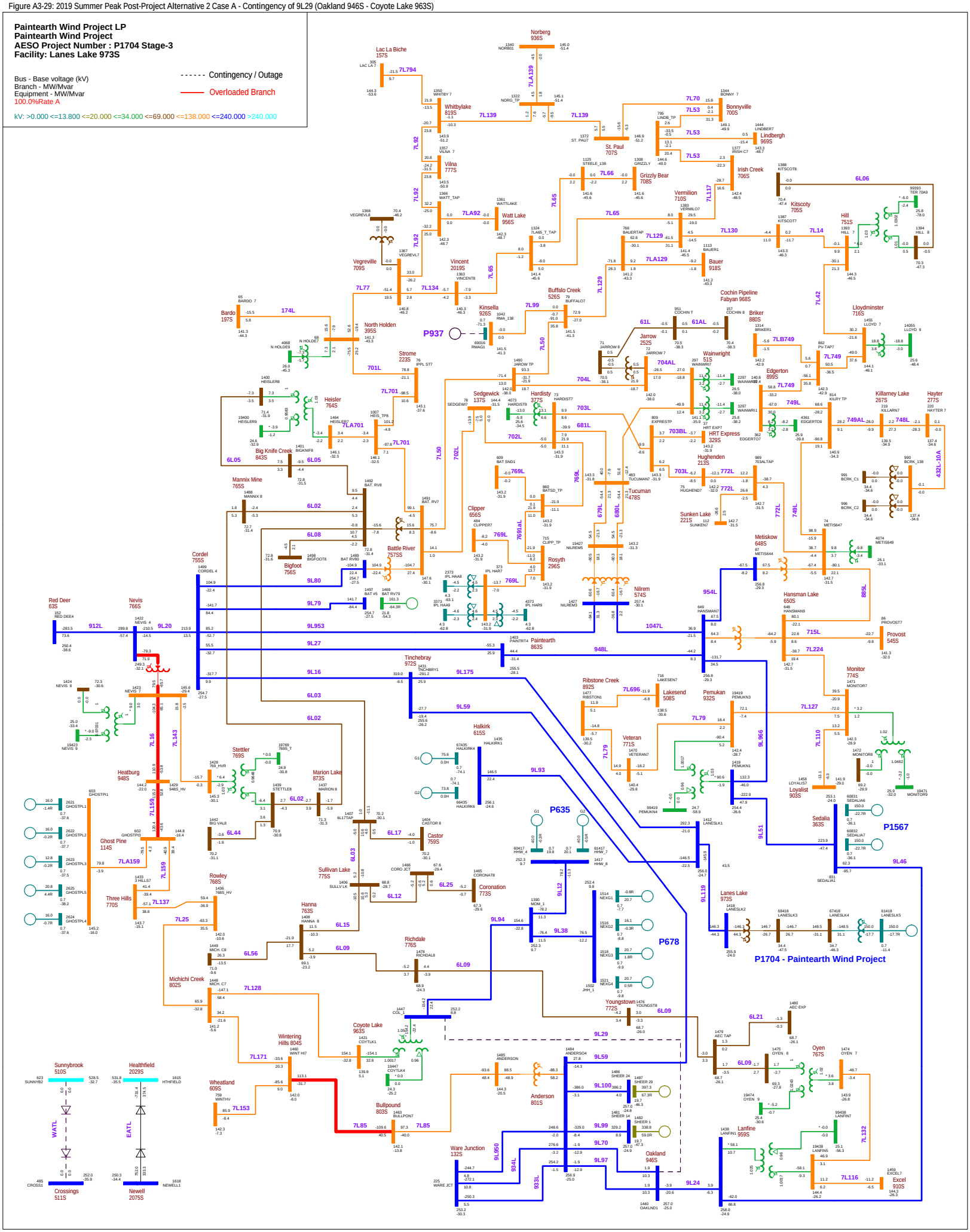

Figure A3-30: 2019 Summer Peak Post-Project Alternative 2 Case A - Contingency of 9L20 (Nevis 766S - Cordel 755S)

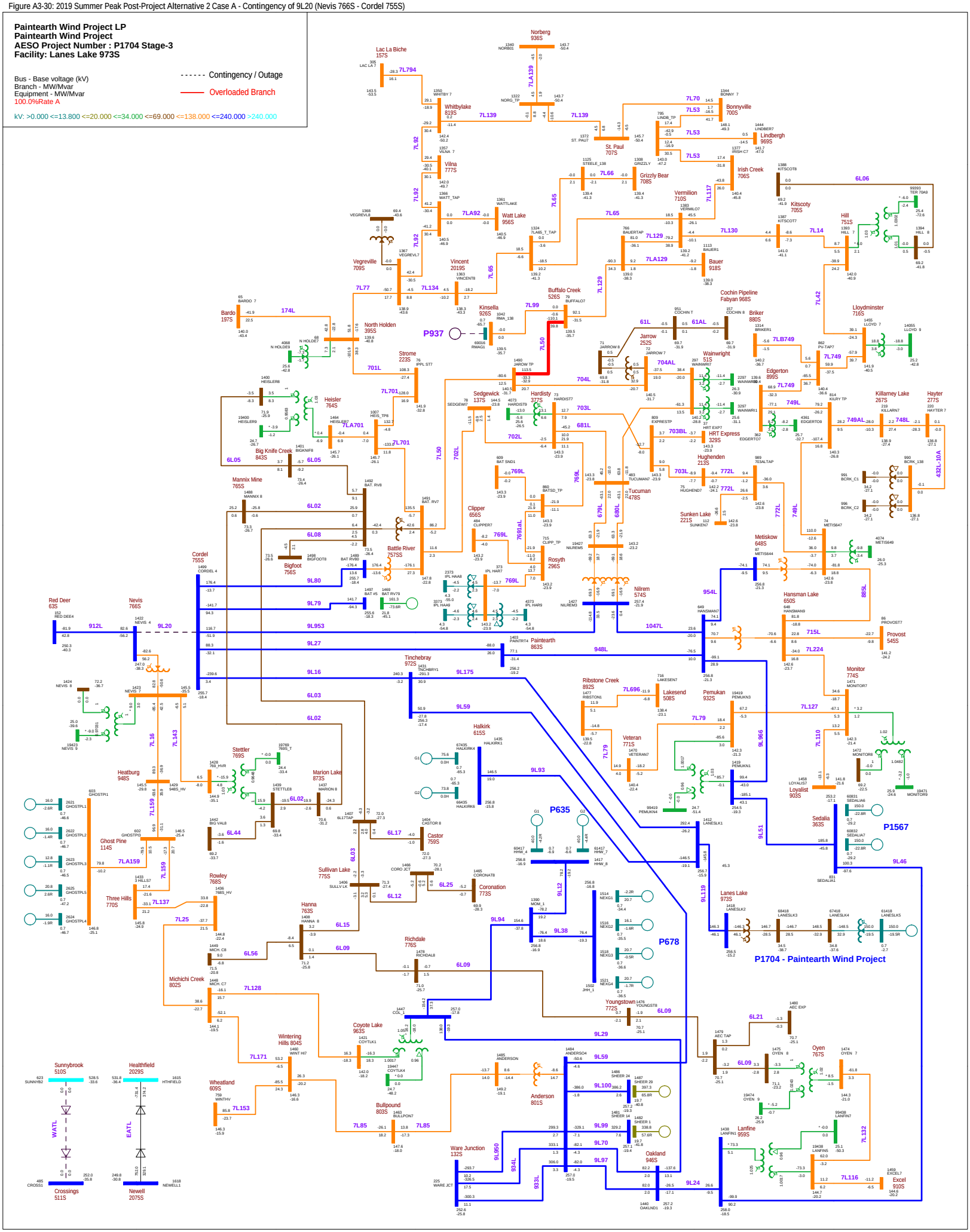

Figure A3-31: 2019 Summer Peak Post-Project Alternative 2 Case A - Contingency of 912L\9L912 (Red Deer 63S - Nevis 766S)

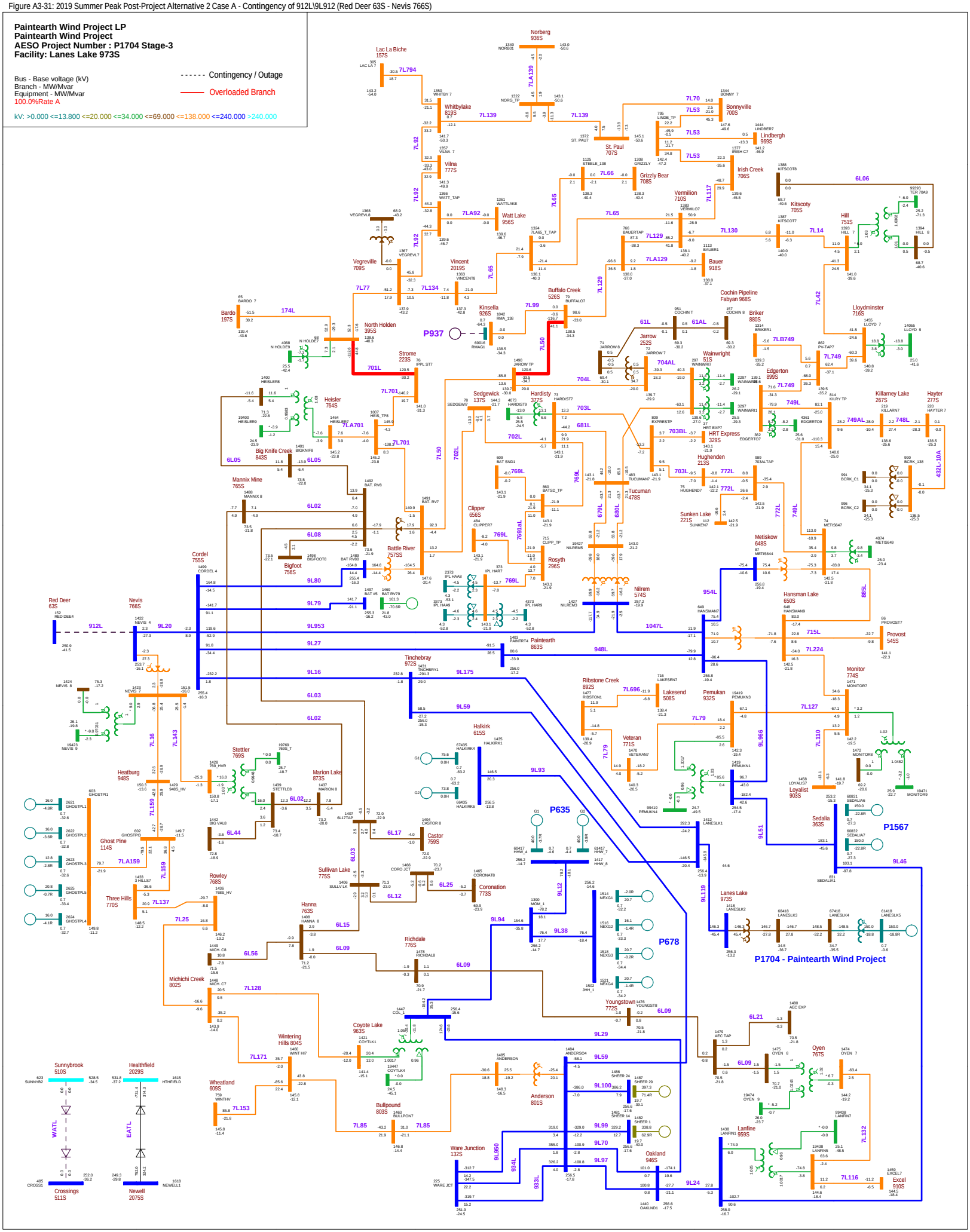
Paintearth Wind Project LP
Paintearth Wind Project
AESO Project Number : P1704 Stage-3
Facility: Lanes Lake 973S
Bus - Base voltage (kV)
Branch - MW/Mvar
Equipment - MW/Mvar
100.0%Rate A
kV: >0.000 <=13.800 <=20.000 <=34.000 <=69.000 <=138.000 <=240.000 >240.000
Contingency / Outage
Overloaded Branch
Norberg 936S
Lac La Biche 157S
Whitbylake 819S
Vilna 777S
Vegreville 709S
Vincent 2019S
Watt Lake 956S
St. Paul 707S
Bonnyville 700S
Lindbergh 969S
Irish Creek 706S
Grizzly Bear 708S
Vermilion 710S
Kitscoty 705S
Hill 751S
Bauer 918S
Buffalo Creek 526S
Kinsella 926S
Bardo 197S
North Holden 395S
Strome 223S
Heisler 764S
Big Knife Creek 843S
Mannix Mine 765S
Bigfoot 756S
Battle River 757SS
Sedgewick 137S
Hardisty 377S
Clipper 656S
Rosyth 296S
Tucuman 478S
Jarrow 252S
Wainwright 51S
HRT Express 329S
Hughenden 213S
Sunken Lake 221S
Cochin Pipeline Fabyan 968S
Briker 880S
Edgerton 899S
Lloydminster 716S
Killarney Lake 267S
Hayter 277S
Metiskow 648S
Provost 545S
Hansman Lake 650S
Cordel 755S
Red Deer 63S
Nevis 766S
Tinchebray 972S
Paintearth 863S
Nilrem 574S
Ribstone Creek 892S
Lakesend 508S
Pemukan 932S
Monitor 774S
Veteran 771S
Loyalist 903S
Sedalia 363S
Halkirk 615S
Stettler 769S
Heatburg 948S
Marion Lake 873S
Ghost Pine 114S
Three Hills 770S
Rowley 768S
Sullivan Lake 775S
Hanna 763S
Richdale 776S
Michichi Creek 802S
Coronation 773S
Castor 759S
Lanes Lake 973S
Youngstown 772S
Oyen 767S
Lanfine 959S
Excel 910S
Sunnybrook 510S
Healthfield 2029S
Crossings 511S
Newell 2075S
Wheatland 609S
Wintering Hills 804S
Coyote Lake 963S
Bullpound 803S
Anderson 801S
Ware Junction 132S
Oakland 946S
Kitscoty 705S
Cochin T
Jarrow 252S
Wainwright 51S
Edgerton 899S
Briker 880S
Lloydminster 716S
Killarney Lake 267S
Hayter 277S
Metiskow 648S
Provost 545S
Hansman Lake 650S
Monitor 774S
Loyalist 903S
Sedalia 363S
Lanes Lake 973S
Youngstown 772S
Oyen 767S
Lanfine 959S
Excel 910S
Oakland 946S
Ware Junction 132S
Anderson 801S
Bullpound 803S
Coyote Lake 963S
Wheatland 609S
Wintering Hills 804S
Michichi Creek 802S
Rowley 768S
Three Hills 770S
Ghost Pine 114S
Heatburg 948S
Marion Lake 873S
Stettler 769S
Halkirk 615S
Coronation 773S
Castor 759S
Sullivan Lake 775S
Hanna 763S
Richdale 776S
Tinchebray 972S
Paintearth 863S
Nilrem 574S
Rosyth 296S
Tucuman 478S
Clipper 656S
Sedgewick 137S
Hardisty 377S
Big Knife Creek 843S
Bigfoot 756S
Battle River 757SS
Mannix Mine 765S
Cordel 755S
Red Deer 63S
Nevis 766S
Bardo 197S
North Holden 395S
Strome 223S
Heisler 764S
Vegreville 709S
Vincent 2019S
Watt Lake 956S
St. Paul 707S
Bonnyville 700S
Lindbergh 969S
Irish Creek 706S
Grizzly Bear 708S
Vermilion 710S
Kitscoty 705S
Hill 751S
Bauer 918S
Buffalo Creek 526S
Kinsella 926S
Lac La Biche 157S
Whitbylake 819S
Vilna 777S
Norberg 936S
P937
P635
P678
P1567
P1704 - Paintearth Wind Project
7L794
7L92
7L139
7LA139
7L70
7L53
7L65
7L66
7L117
7L129
7LA129
7L130
7L14
7L06
7L77
7L134
7L65
7L99
7L50
7L129
7L42
7L61
7LA1
7LB749
7L749
7L704AL
7L704
7L703
7L681
7L702
7L50
7L701
7LA701
7L702L
7L769
7L691aL
7L679L
7L680L
7L703BL
7L703L
7L772L
7L749L
7L748L
7L749AL
432L-10A
6L05
6L02
6L08
6L03
6L44
6L17
6L25
6L12
6L15
6L09
6L56
6L21
6L09
7LA159
7L159
7L16
7L143
7L137
7L25
7L128
7L171
7L153
7L85
9L80
9L79
9L953
9L27
9L16
9L175
9L59
9L93
9L94
9L38
9L12
9L29
9L59
9L100
9L99
9L70
9L97
9L950
934L
933L
9L24
9L119
9L51
9L966
7L110
7L127
7L79
7L696
7L224
715L
948L
954L
1047L
885L
912L
9L20
9L46
7L116
7L132
7L749
7L7749
7L748
7L7749
7L749
7L749L
7L772L
7L703L
7L703BL
7L680L
7L679L
7L691aL
7L769L
7L702L
7L701L
7L701
7L701
7L7701
7L7701
7L7A701
7L7A701
7L7A92
7L92
7L92
7L92
7L65
7L65
7L7A129
7L129
7L7A139
7L139
7L139
7L139
7L7A139
7L794
7L794

Figure A3-32: 2019 Summer Peak Post-Project Alternative 2 Case A - Contingency of 701L (North Holden 395S - Strome 223S)

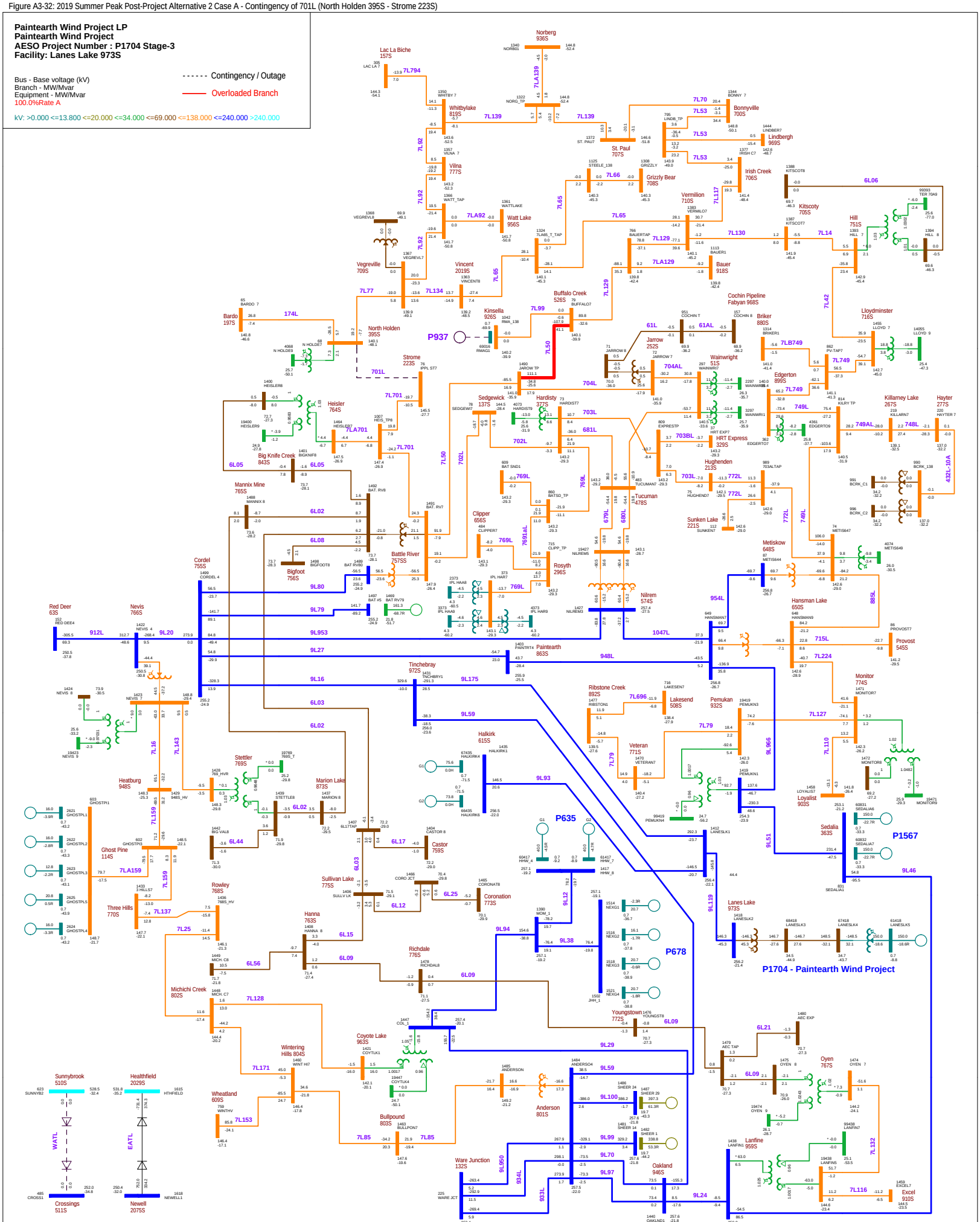

Figure A3-33: 2019 Summer Peak Post-Project Alternative 2 Case A - Contingency of 526ST1 or 526ST2 (Buffalo Creek 526S Transformer T1 or T2)

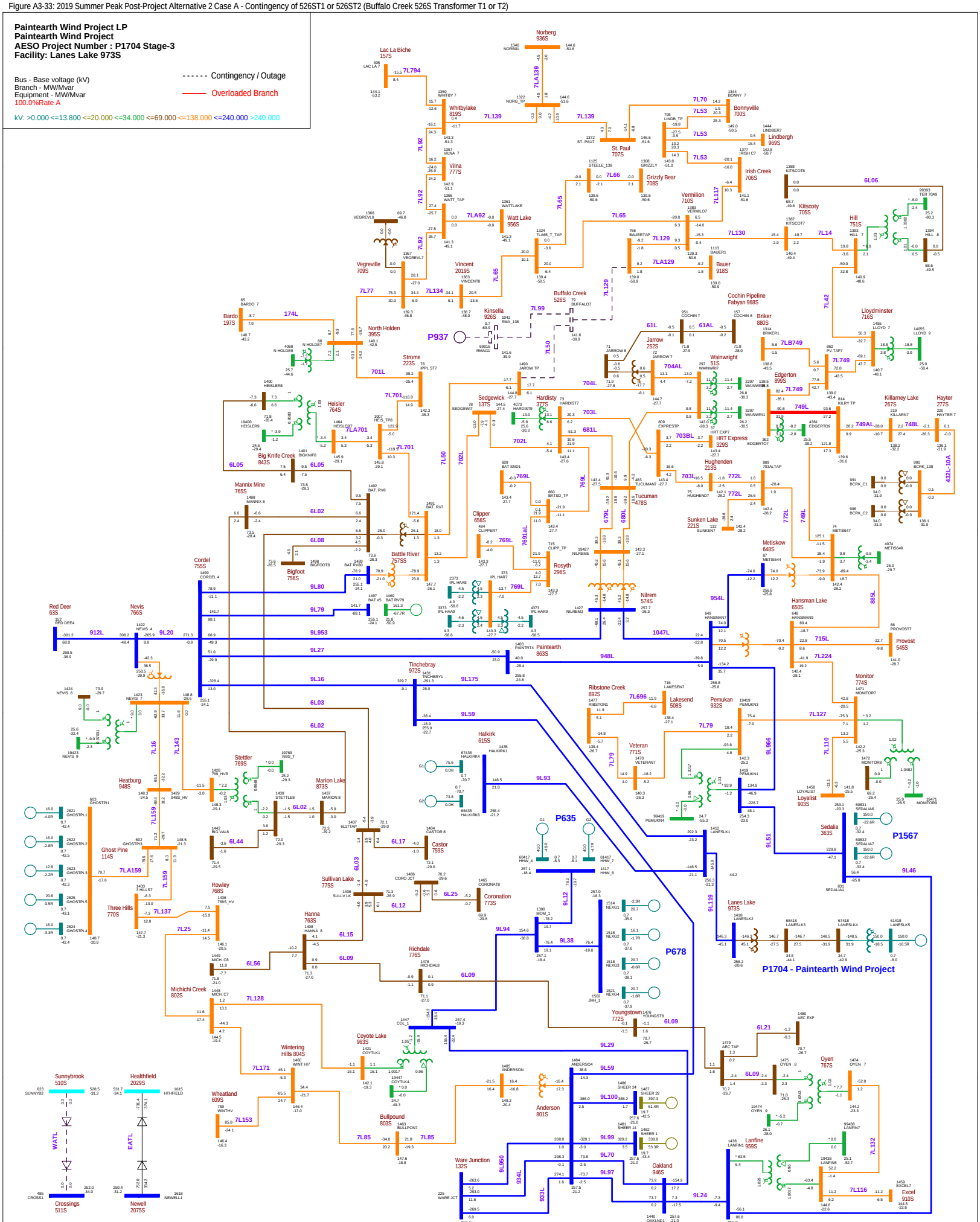

Figure A3-34: 2019 Summer Peak Post-Project Alternative 2 Case B - N-0 (System Normal Condition)

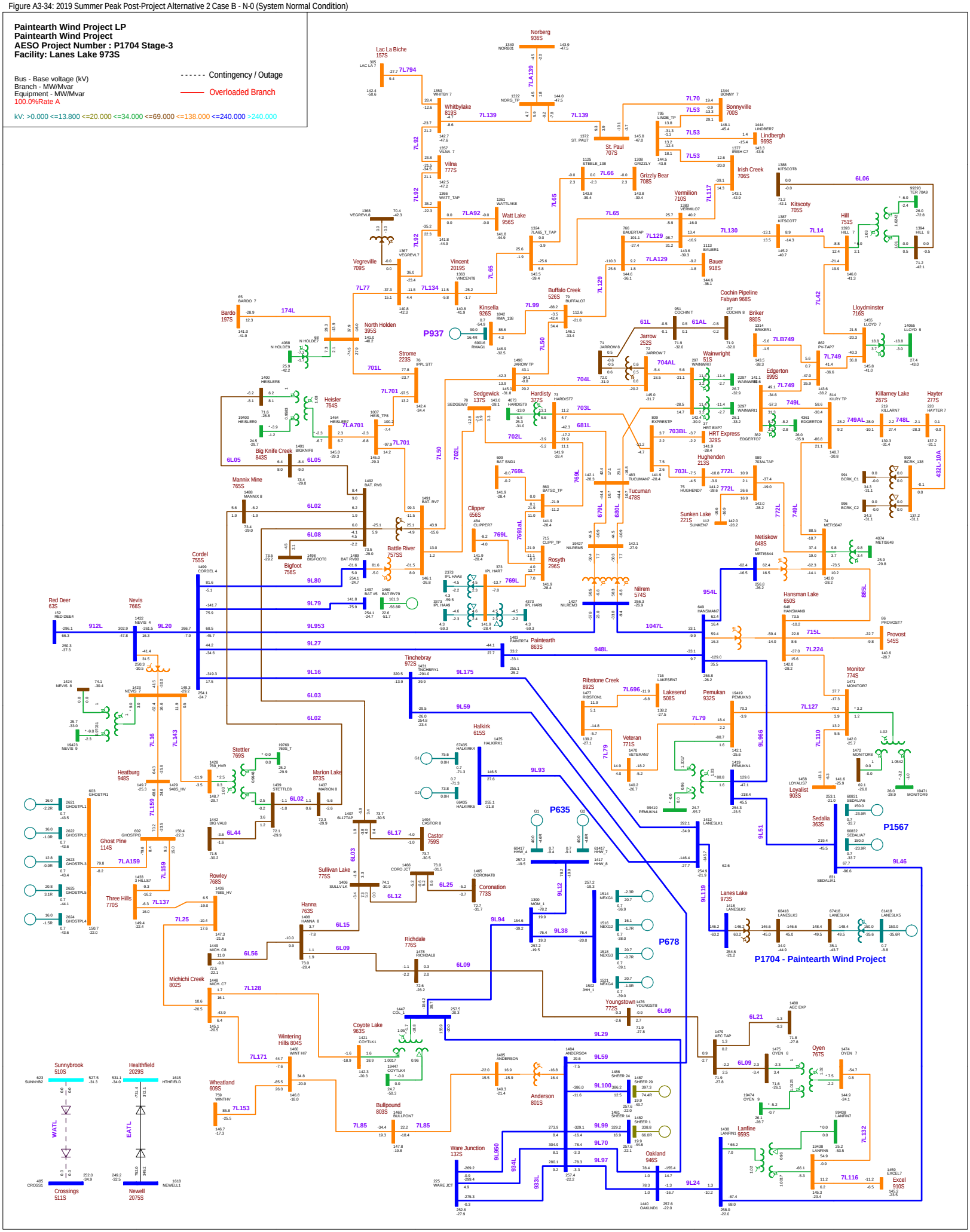
Paintearth Wind Project LP
Paintearth Wind Project
AESO Project Number : P1704 Stage-3
Facility: Lanes Lake 973S
Bus - Base voltage (kV)
Branch - MW/Mvar
Equipment - MW/Mvar
100.0%Rate A
Contingency / Outage
Overloaded Branch
kV: >0.000 <=13.800 <=20.000 <=34.000 <=69.000 <=138.000 <=240.000 >240.000
Norberg 936S
Lac La Biche 157S
Whitbylake 819S
Vilna 777S
Watt Lake 956S
Vegreville 709S
Vincent 2019S
Kinsella 926S
Buffalo Creek 526S
St. Paul 707S
Bonnyville 700S
Lindbergh 969S
Irish Creek 706S
Grizzly Bear 708S
Vermilion 710S
Bauer 918S
Kitscoty 705S
Hill 751S
Cochin Pipeline Fabyan 968S
Briker 880S
Lloydminster 716S
Killarney Lake 267S
Hayter 277S
Jarrow 252S
Wainwright 51S
Edgerton 899S
HRT Express 329S
Hughenden 213S
Sunken Lake 221S
Metiskow 648S
Hansman Lake 650S
Provost 545S
Monitor 774S
Lakesend 508S
Pemukan 932S
Veteran 771S
Ribstone Creek 892S
Loyalist 903S
Sedalia 363S
Lanes Lake 973S
Youngstown 772S
Oyen 767S
Lanfine 959S
Excel 910S
Bardo 197S
North Holden 395S
Strome 223S
Heisler 764S
Big Knife Creek 843S
Mannix Mine 765S
Cordel 755S
Bigfoot 756S
Battle River 757SS
Sedgewick 137S
Hardisty 377S
Clipper 656S
Rosyth 296S
Tucumar 478S
Nilrem 574S
Paintearth 863S
Red Deer 63S
Nevis 766S
Heatburg 948S
Ghost Pine 114S
Three Hills 770S
Rowley 768S
Michichi Creek 802S
Sunnybrook 510S
Crossings 511S
Healthfield 2029S
Newell 2075S
Tinchebray 972S
Halkirk 615S
Stettler 769S
Marion Lake 873S
Castor 759S
Sullivan Lake 775S
Coronation 773S
Hanna 763S
Richdale 776S
Coyote Lake 963S
Wintering Hills 804S
Wheatland 609S
Bullpound 803S
Anderson 801S
Ware Junction 132S
Oakland 946S
P937
P635
P678
P1567
P1704 - Paintearth Wind Project
WATL
EATL
174L
912L
9L20
9L80
9L79
9L953
9L27
9L16
9L175
9L59
9L93
9L966
9L51
9L46
9L119
9L94
9L38
9L12
9L29
9L59
9L100
9L99
9L70
9L97
9L24
9L950
934L
933L
948L
1047L
954L
885L
715L
7L224
7L127
7L110
7L79
7L696
7L696
7L749B
7L749
7L749A
7L748
7L14
7L130
7L129
7L53
7L70
7L117
7L65
7L66
7L92
7L139
7L794
7L134
7L77
7L99
7L50
7L129
7L42
7L702
7L703
7L704
7L704AL
7L701
7L681
7L703BL
7L772L
7L772
7L691AL
7L769
7L769L
7L679L
7L680L
7L703L
7L61
7L61AL
7L6B749
7L6L06
7L6L05
7L6L02
7L6L08
7L6L44
7L6L17
7L6L25
7L6L12
7L6L15
7L6L09
7L6L56
7L6L03
7L6L21
7L6L09
7L6L09
7L16
7L143
7L159
7L159
7L159
7LA159
7L137
7L25
7L128
7L171
7L153
7L85
7L85
7LA139
7LA92
7LA701
7LA129
7L6L05
7L6L02
7L6L02
7L6L03
7L6L09
7L6L09
7L6L09

Figure A3-35: 2019 Summer Peak Post-Project Alternative 2 Case B - Contingency of 7L749\749L\7LB749 (Edgerton 899S - Briker 880S - Lloydminster 716S)

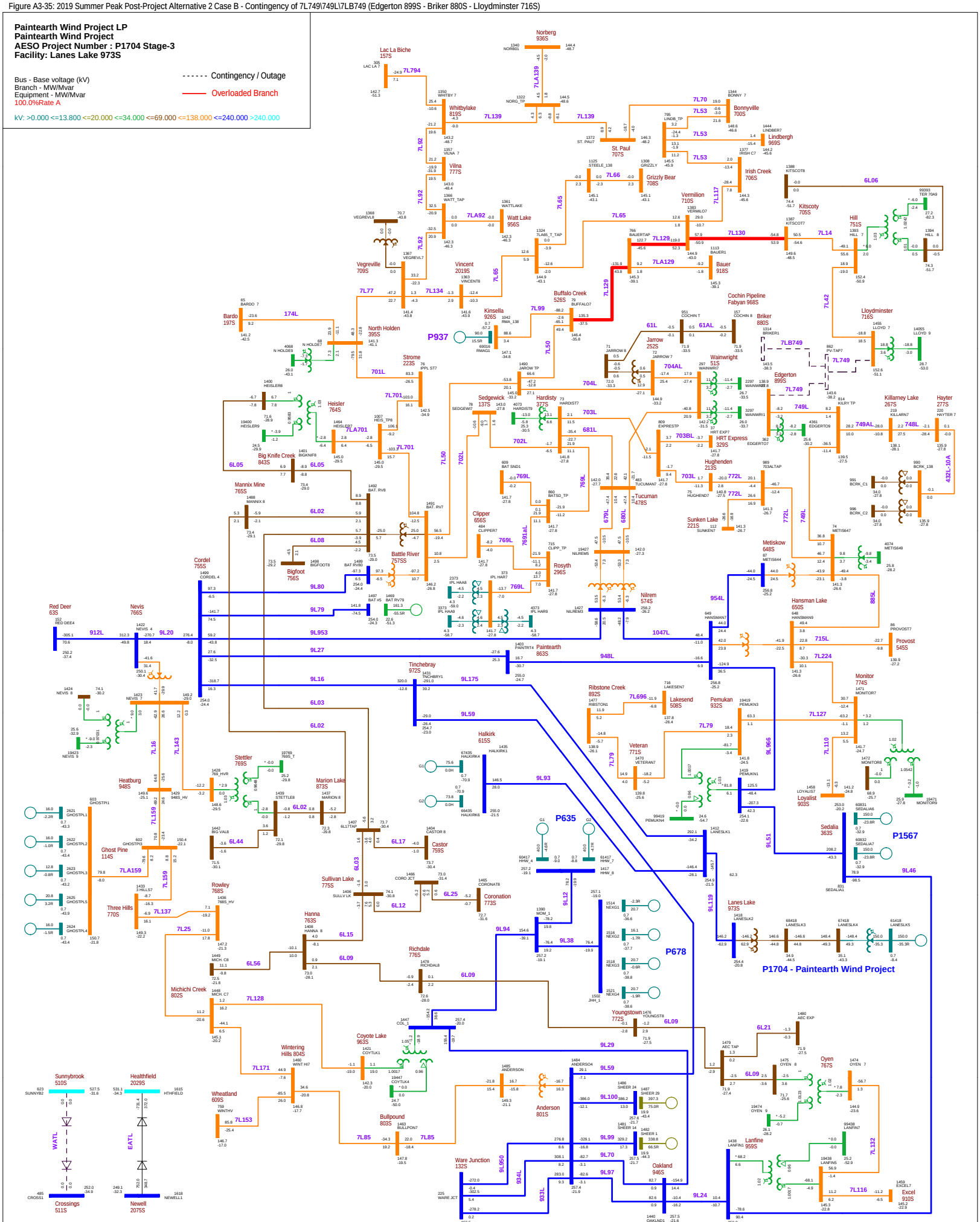

Figure A3-36: 2019 Summer Peak Post-Project Alternative 2 Case B - Contingency of 701L (North Holden 395S - Strome 223S)

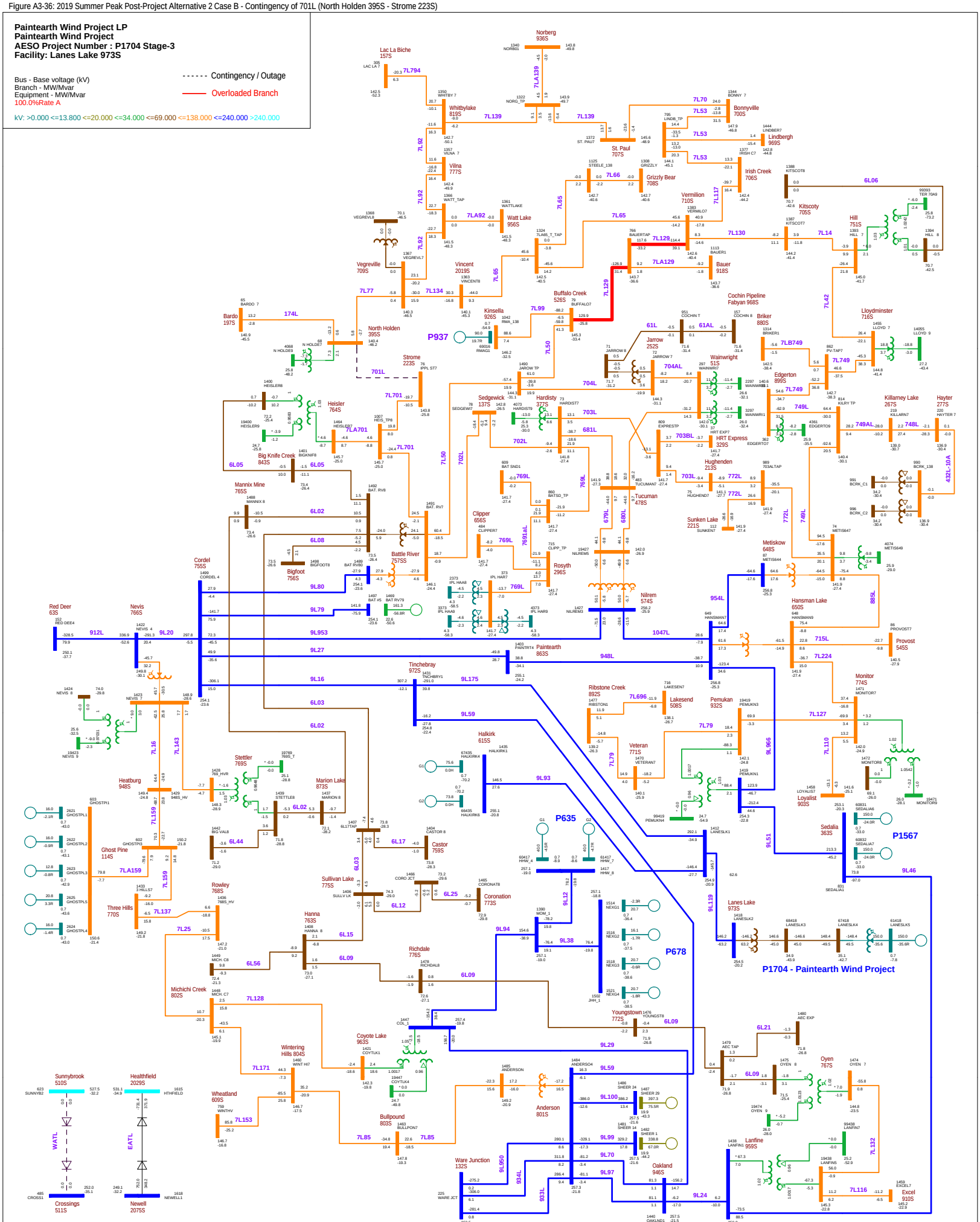

Figure A3-37: 2019 Summer Peak Post-Project Alternative 2 Case B - Contingency of 395ST1 (North Holden 395S Transformer T1)

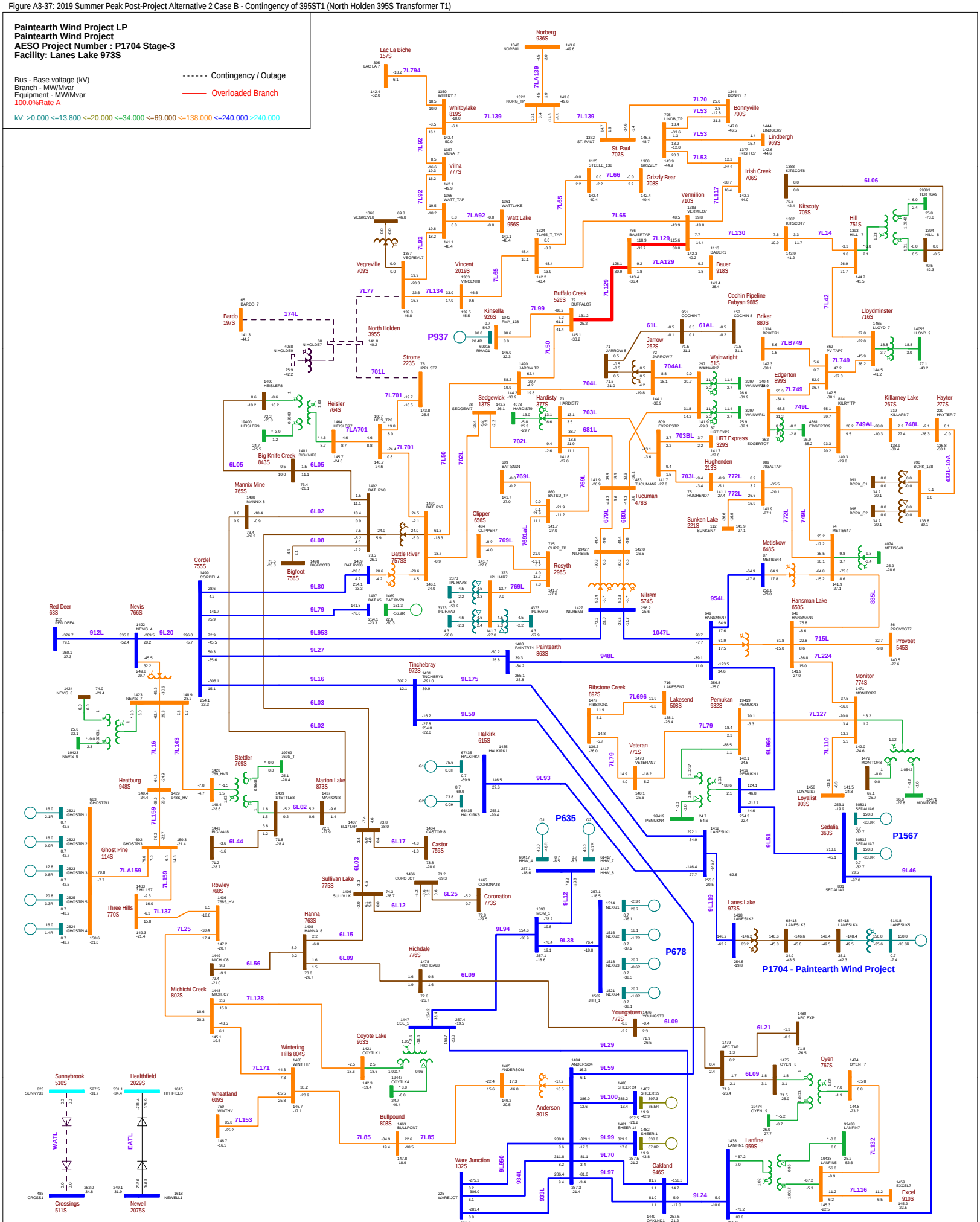

Figure A3-38: 2019 Summer Peak Post-Project Alternative 2 Case B - Contingency of 769L\769AL (Hardisty 377S - Clipper 656S - Rosyth 286S)

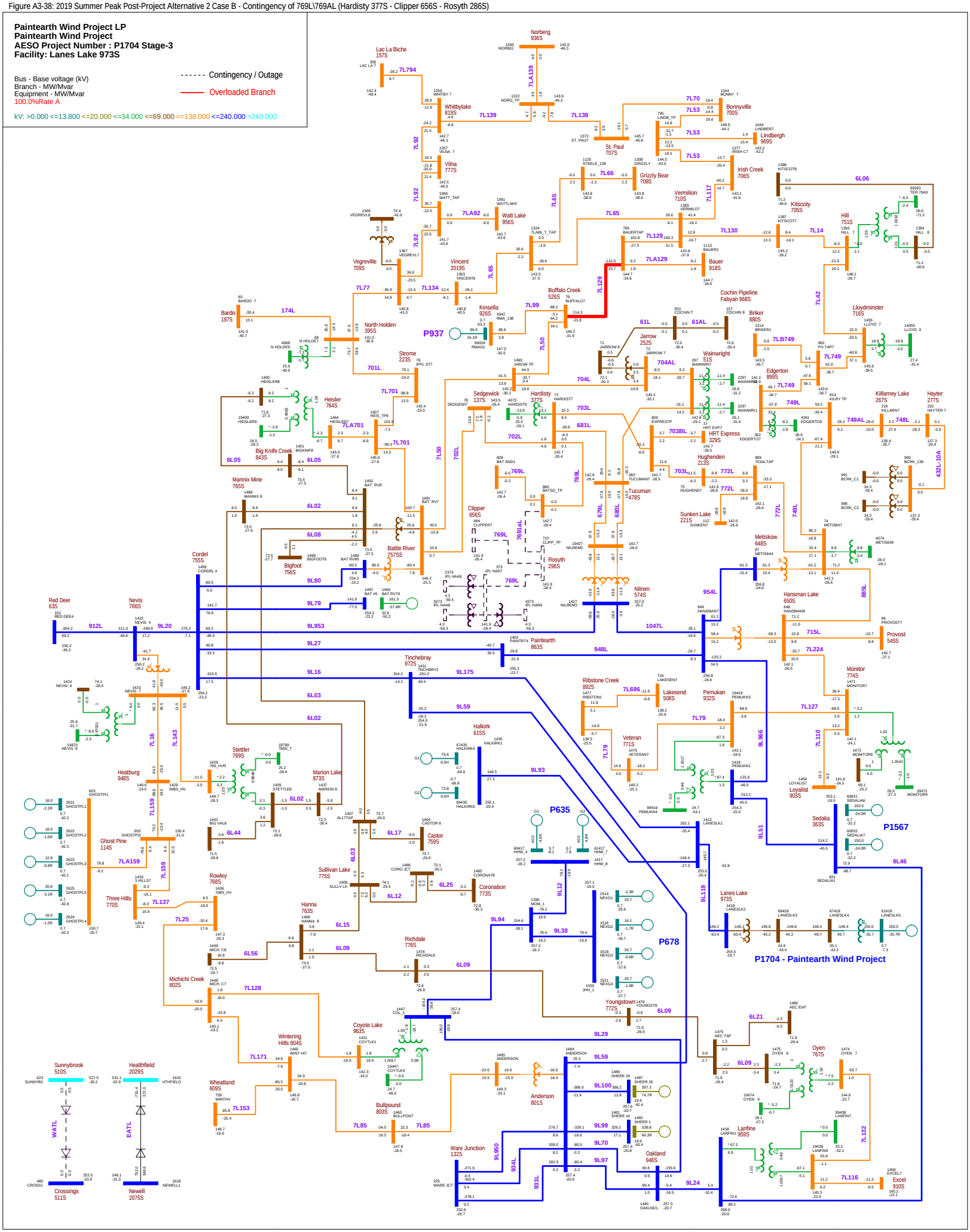

Figure A3-39: 2019 Summer Peak Post-Project Alternative 2 Case B - Contingency of 296ST1 or 296ST2 (Rosyth 286S Transformer T1 or T2

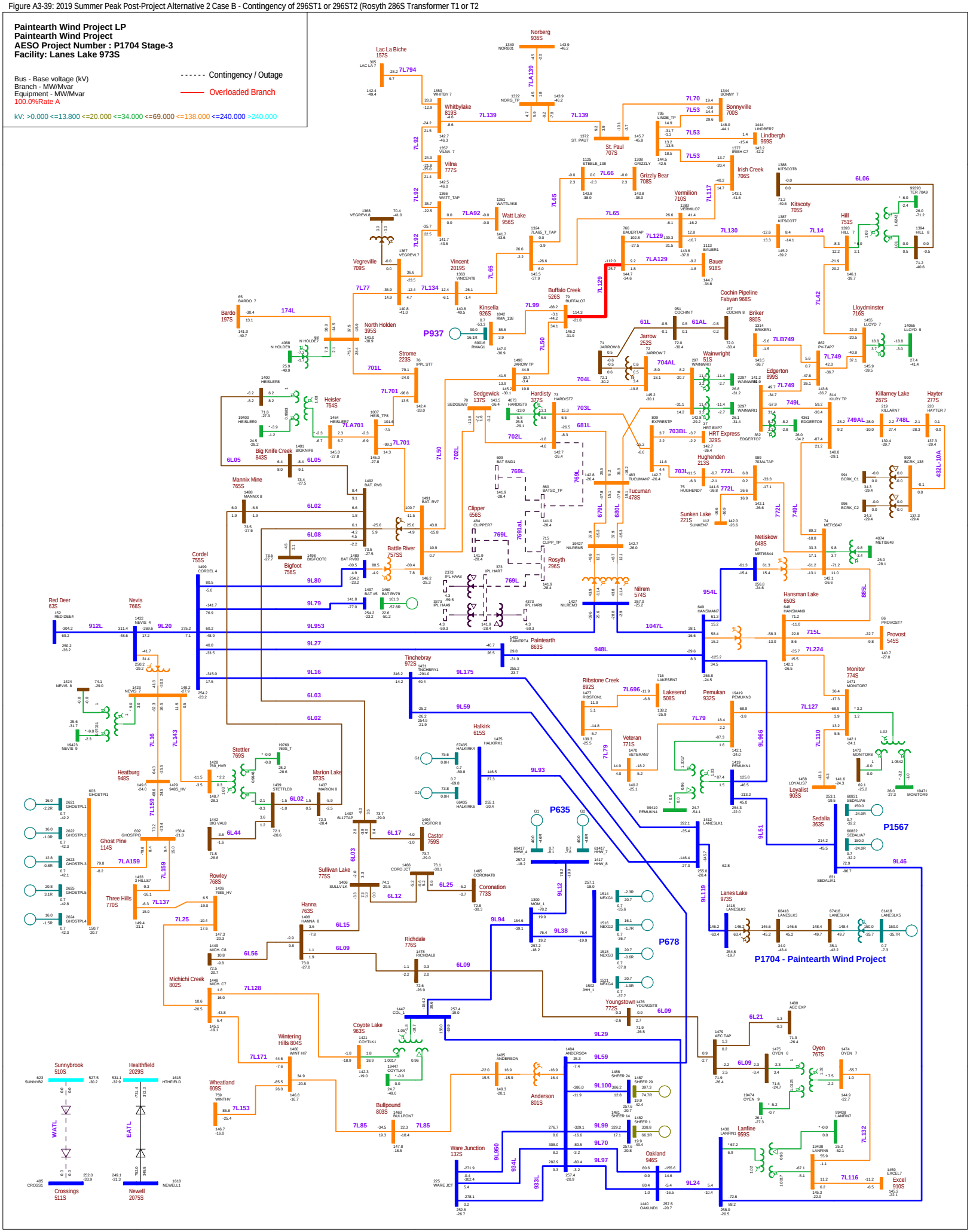

Figure A3-40: 2019 Summer Peak Post-Project Alternative 2 Case B - Contingency of 9L20 (Nevis 766S - Cordel 755S)

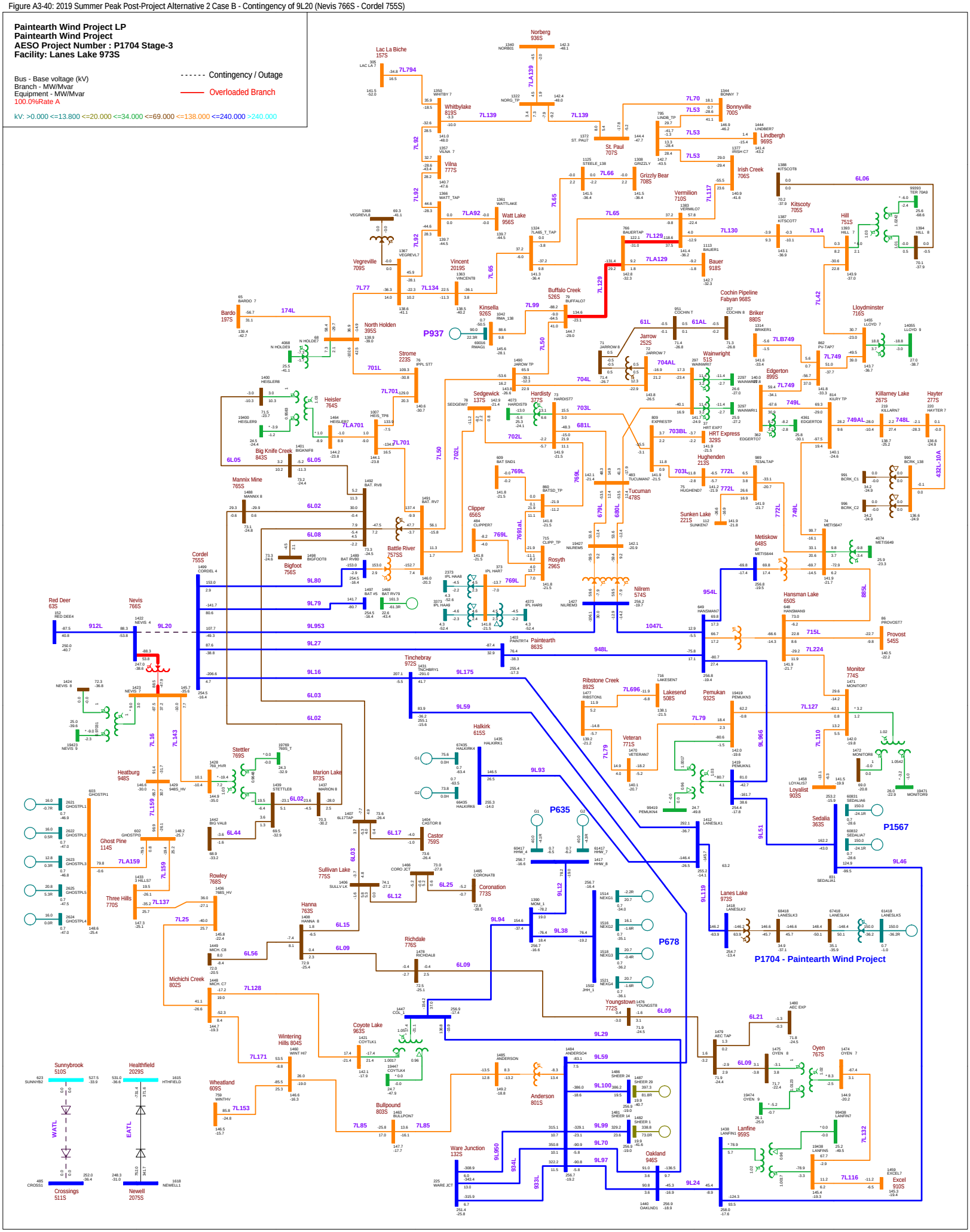

Figure A3-41: 2019 Summer Peak Post-Project Alternative 2 Case B - Contingency of 966L\9L966 (Hansman Lake 650S - Pemukan 932S)

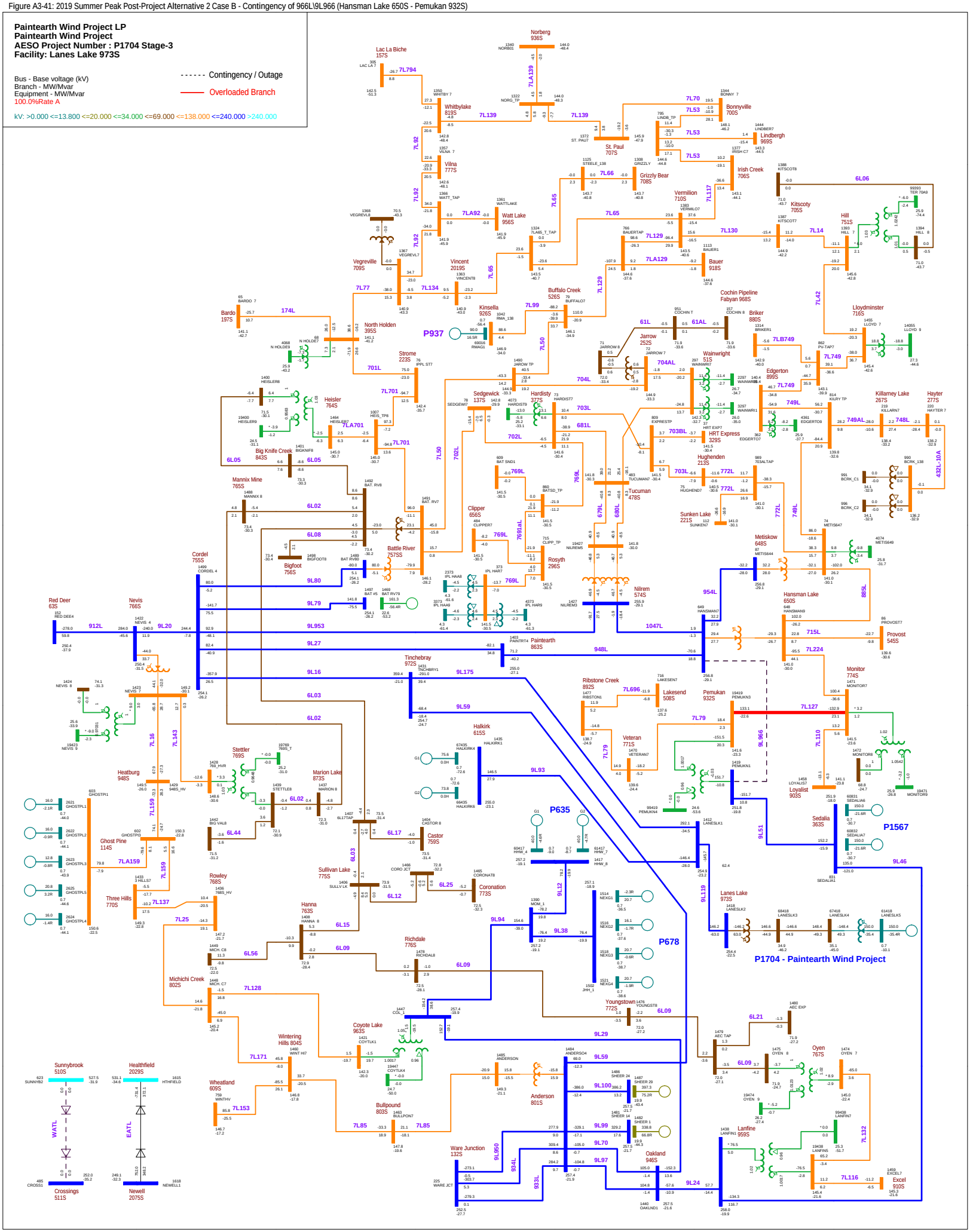

Figure A3-42: 2019 Summer Peak Post-Project Alternative 2 Case B - Contingency of 7L42 (Hill 751S - Lloydminster 716S)

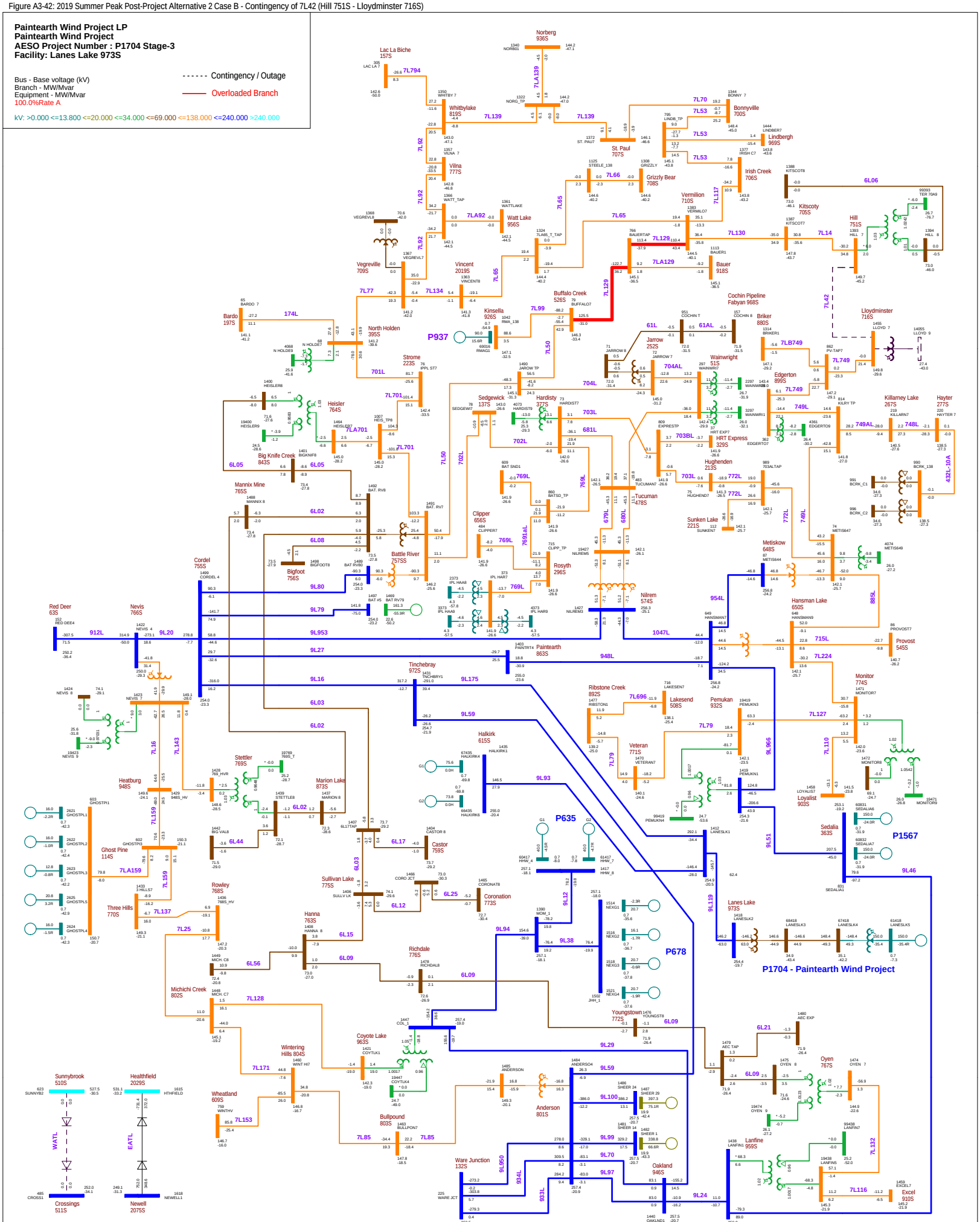

Figure A3-43: 2019 Summer Peak Post-Project Alternative 2 Case B - Contingency of 650ST1 (Hansman Lake 650S Transformer T1)

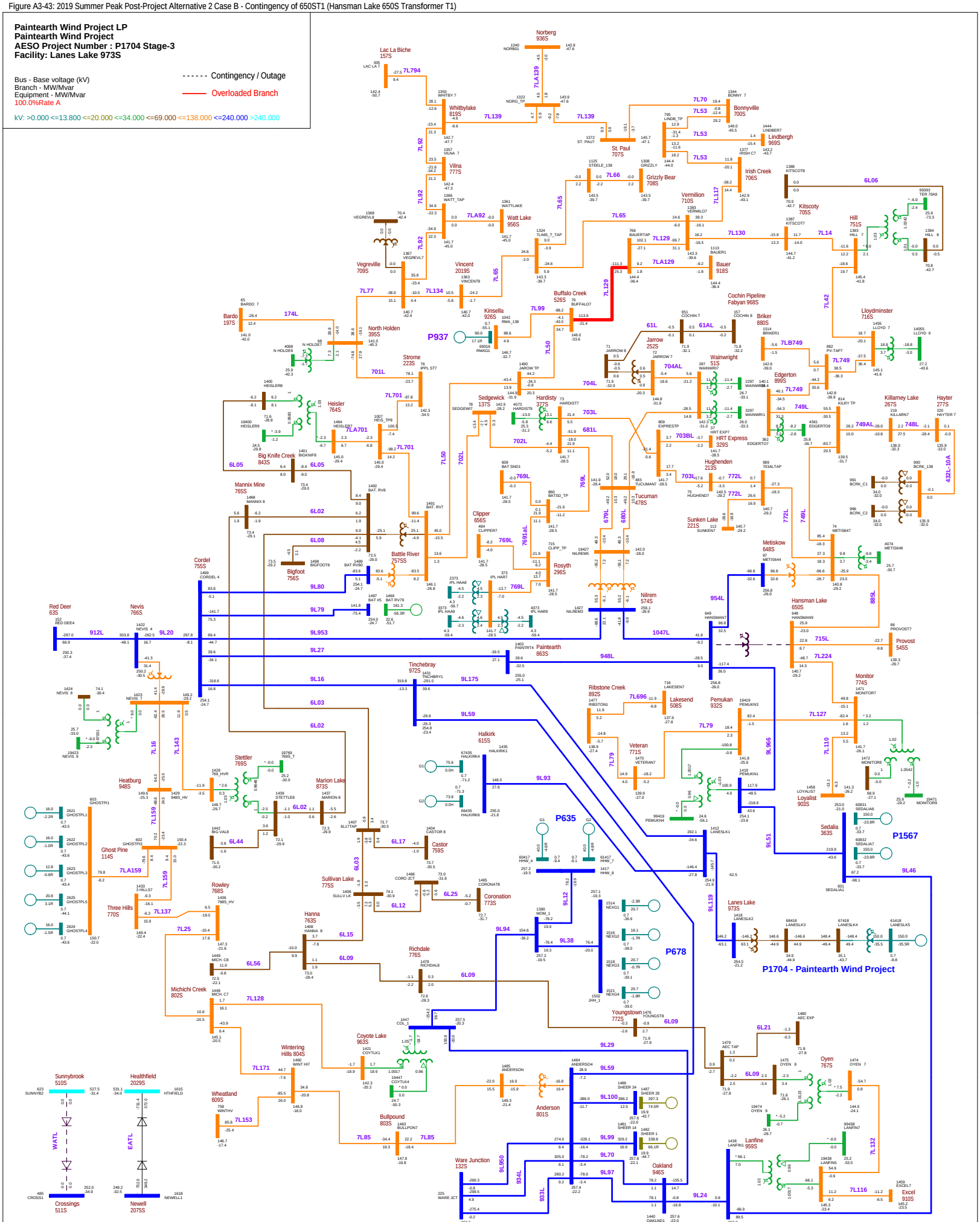

Figure A3-44: 2019 Summer Peak Post-Project Alternative 2 Case B - Contingency of 954L (Hansman Lake 650S - Metiskow 648S)

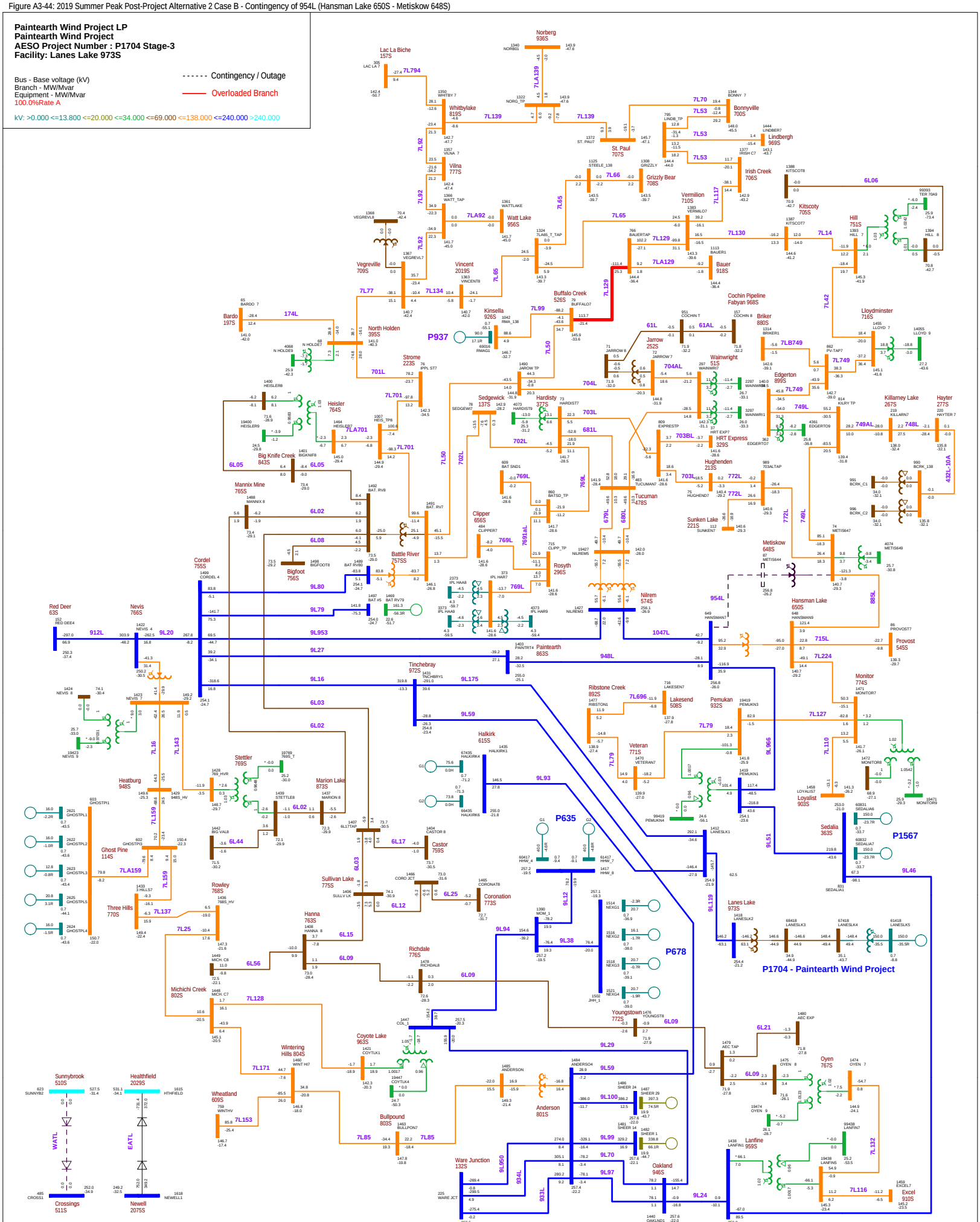

Figure A3-45: 2019 Summer Peak Post-Project Alternative 2 Case B - Contingency of 377ST1 (Hardisty 377S Transformer T1)

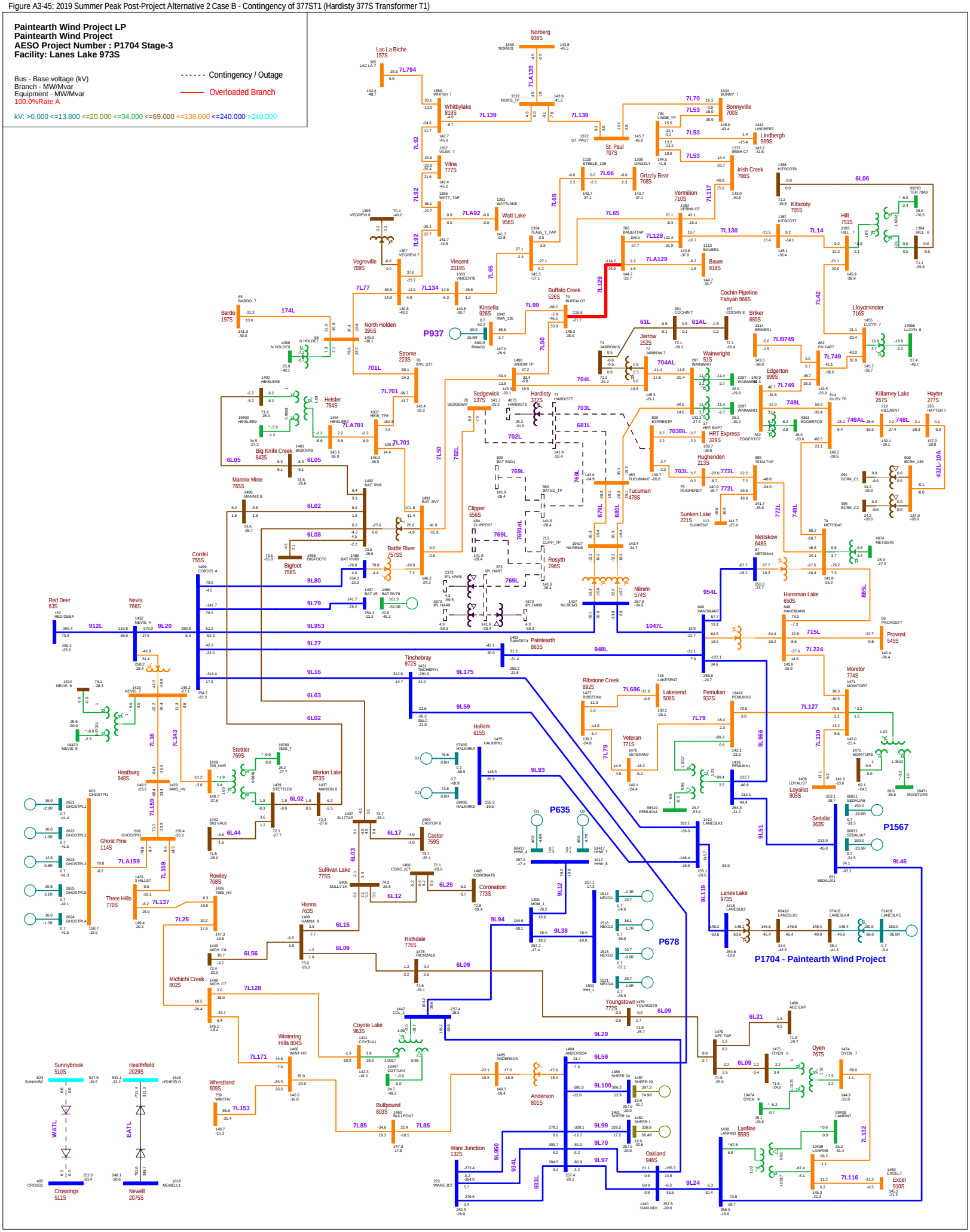

Figure A3-46: 2019 Summer Peak Post-Project Alternative 2 Case B - Contingency of 9L950\950L (Ware Junction 132S - Anderson 801S)

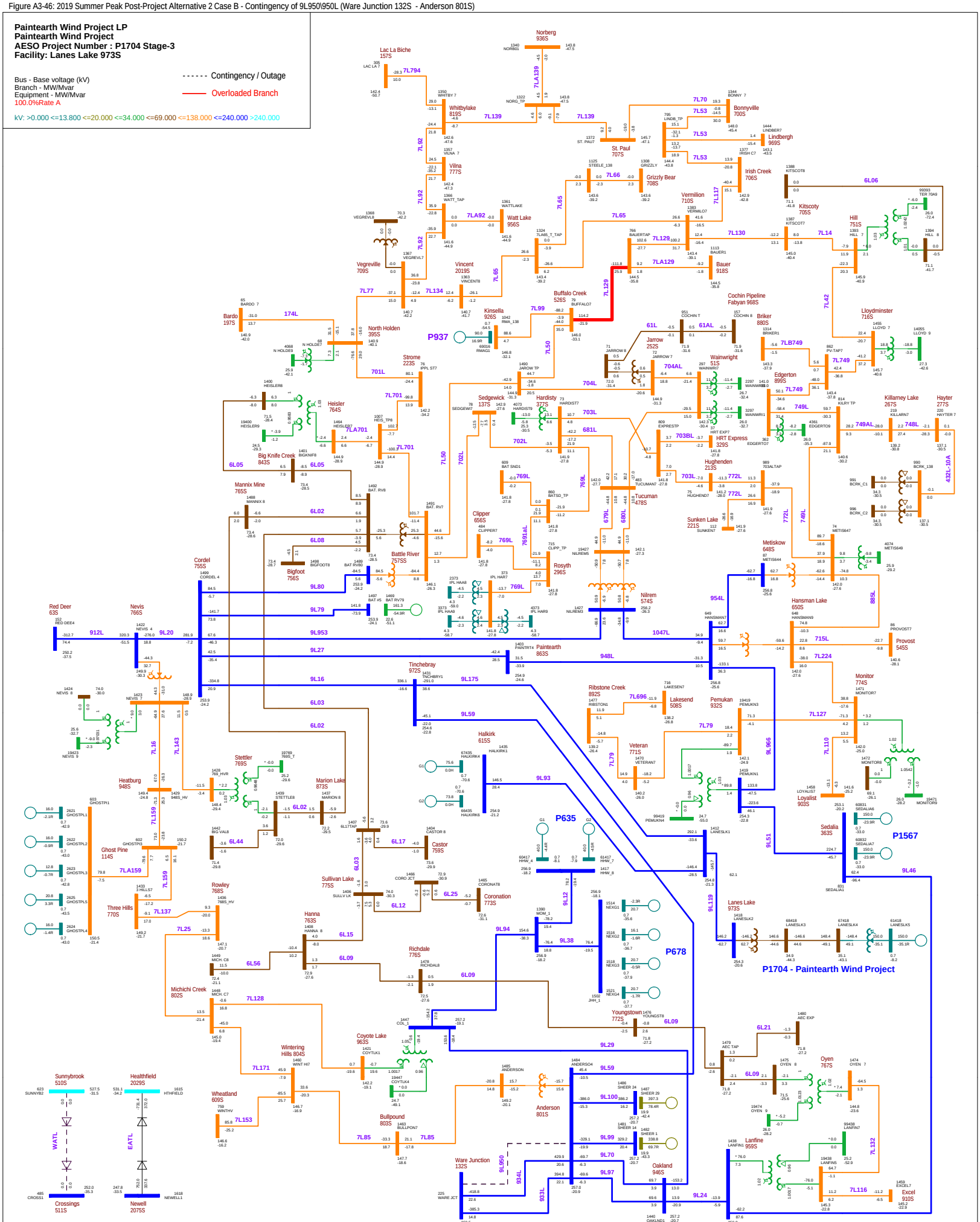

Figure A3-47: 2019 Summer Peak Post-Project Alternative 2 Case B - Contingency of 51ST3 or 51ST4 (Wainwright 51S Transformer T3 or T4)

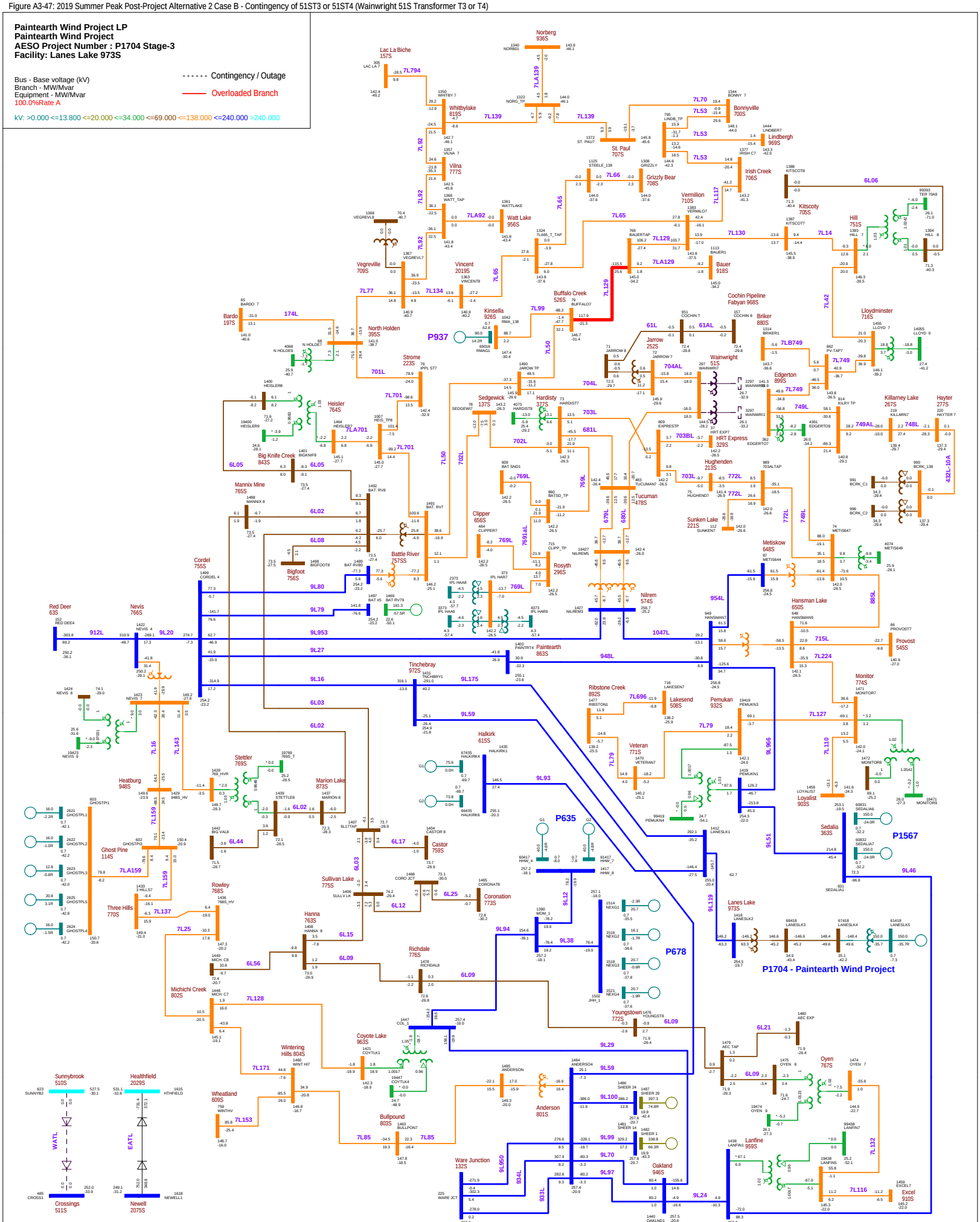

Figure A3-48: 2019 Summer Peak Post-Project Alternative 2 Case B - Contingency of 9L46 (Lanfine 959S - Sedalia 363S)

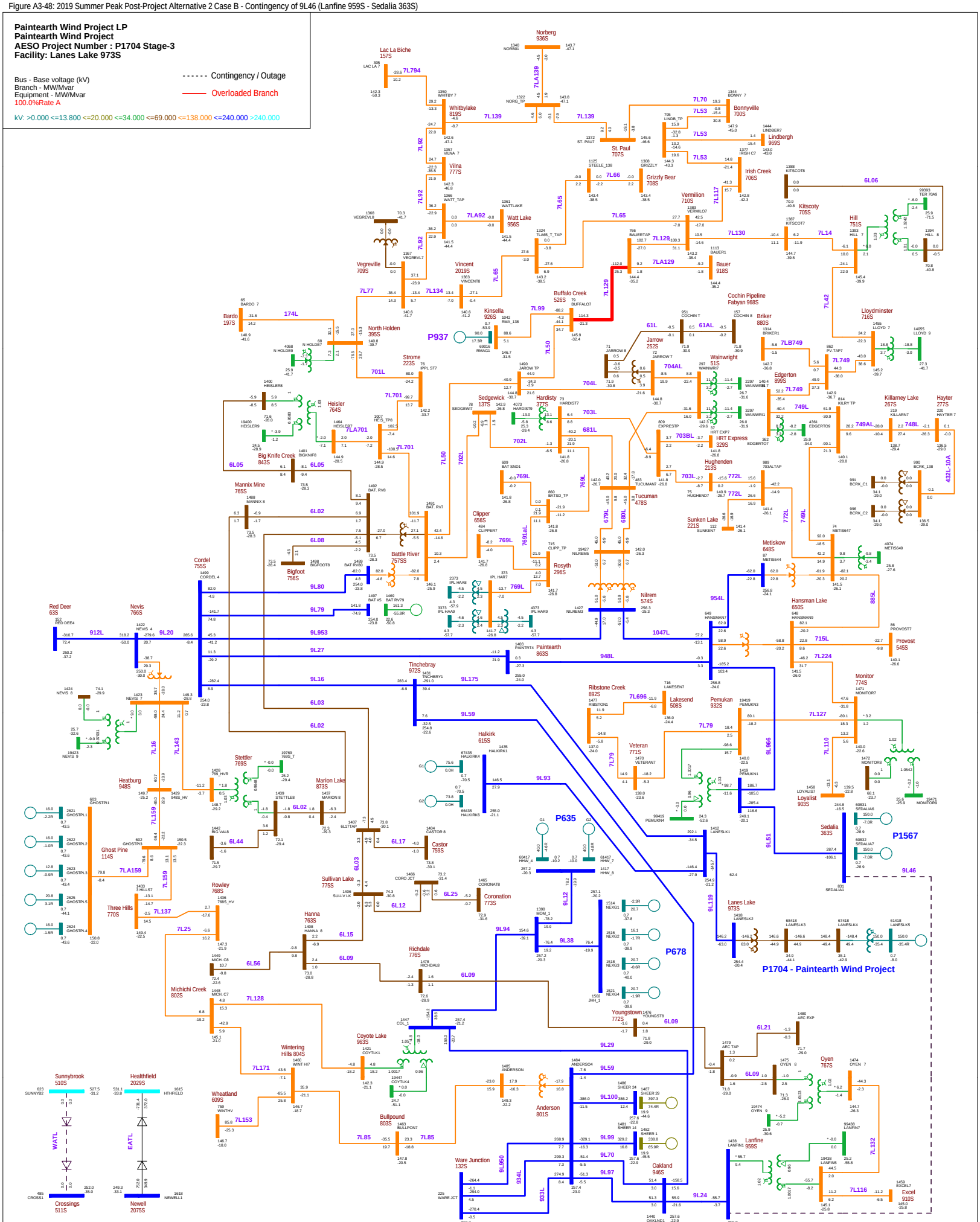

Figure A3-49: 2019 Summer Peak Post-Project Alternative 2 Case B - Contingency of 9L29 (Oakland 946S - Coyote Lake 963S)

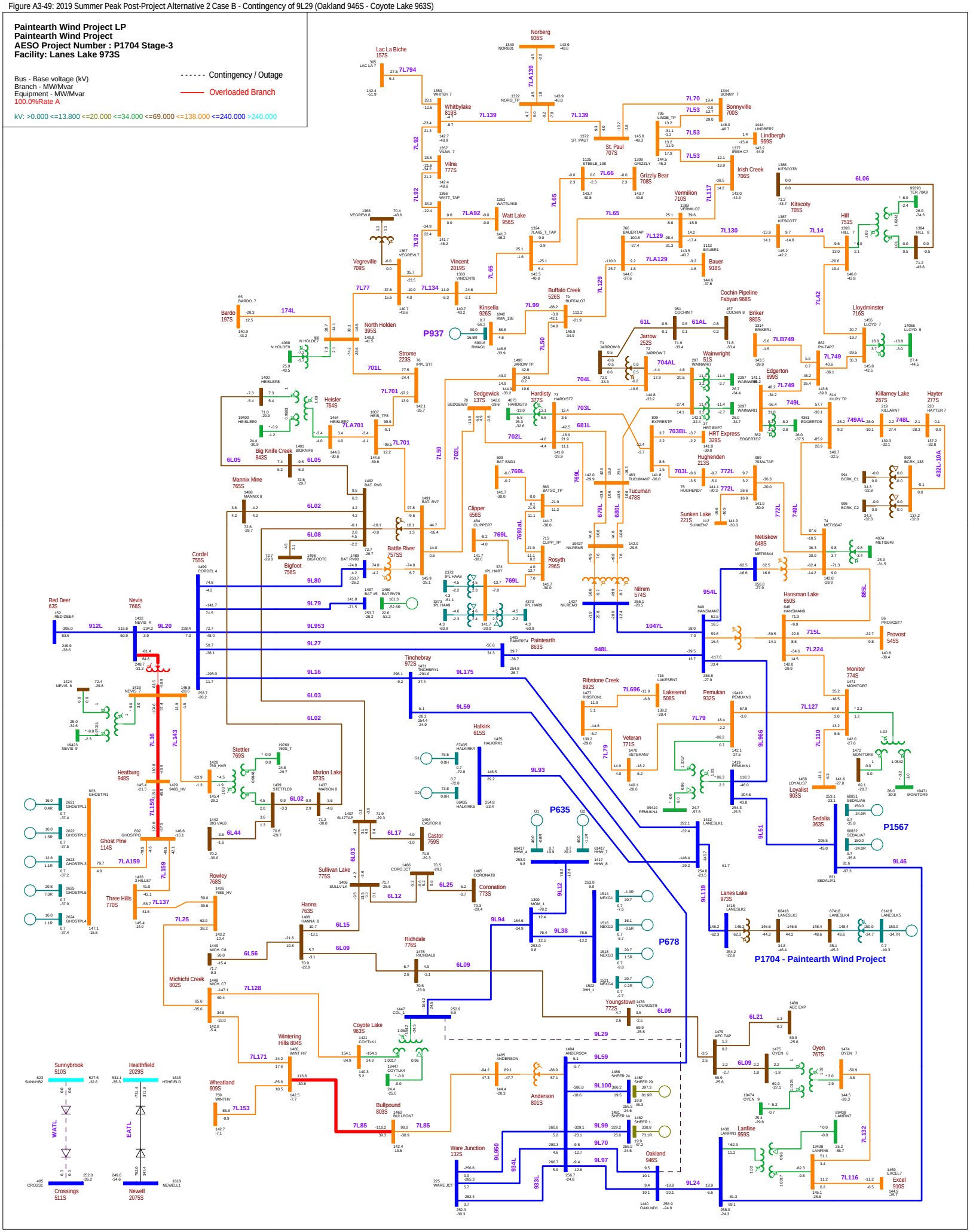

Figure A3-50: 2019 Summer Peak Post-Project Alternative 2 Case B - Contingency of 899ST3A (Edgerton 899S Transformer T3A)

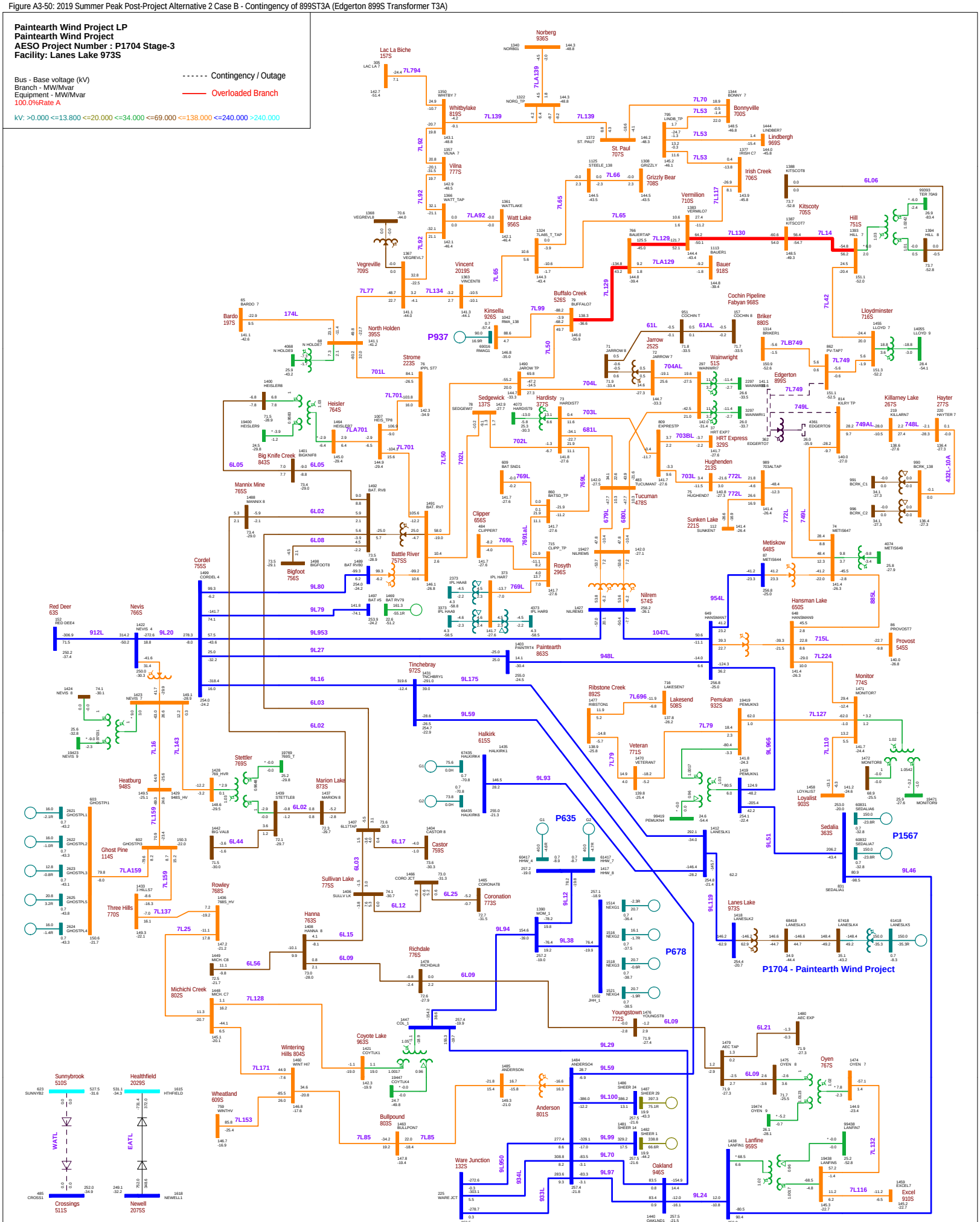

Figure A3-51: 2019 Summer Peak Post-Project Alternative 2 Case B - Contingency of 681L (Tucuman 478S - Hardisty 377S)

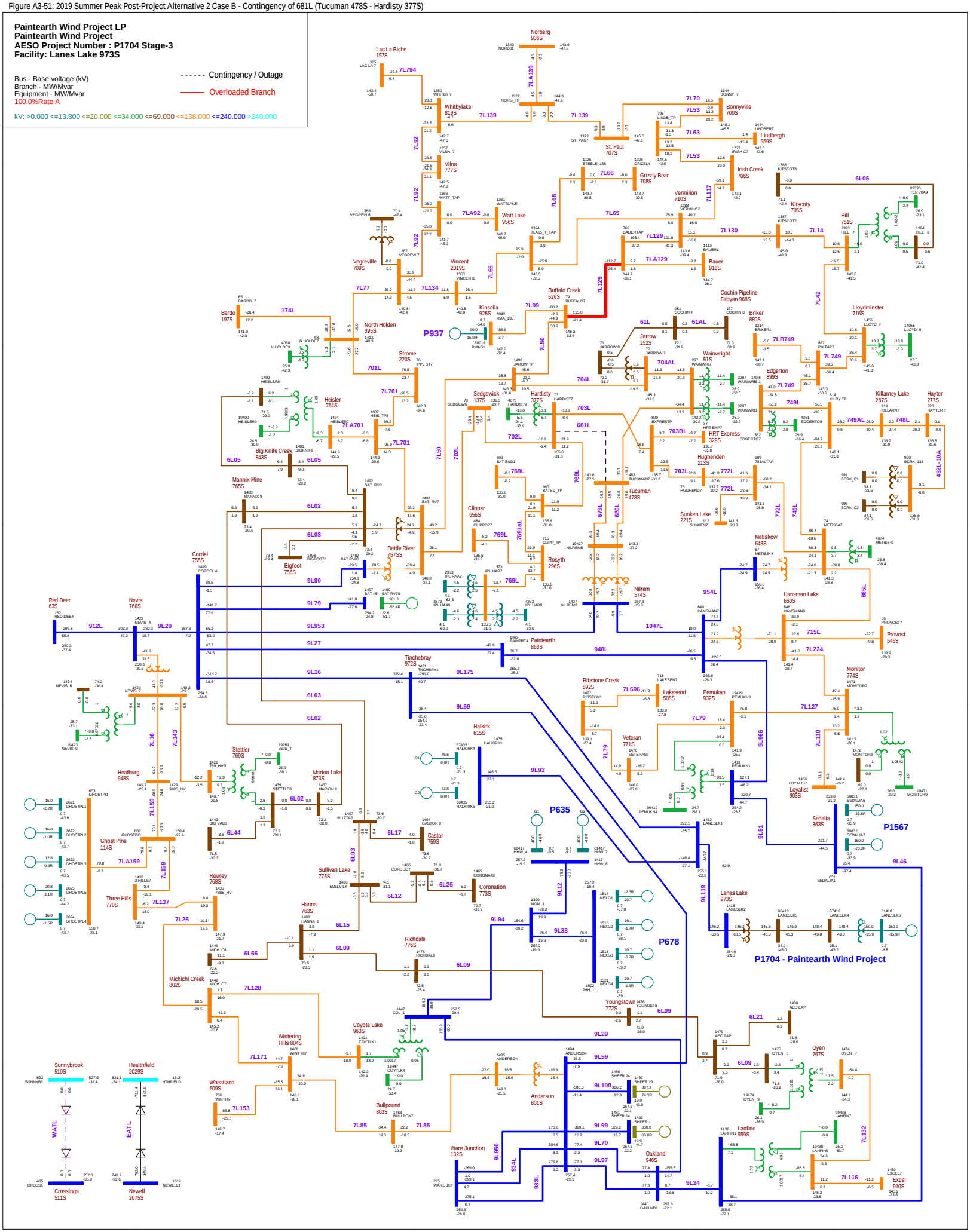

Figure A3-52: 2019 Summer Peak Post-Project Alternative 2 Case B - Contingency of 7L77 (North Holden 395S - Vegreville 709S)

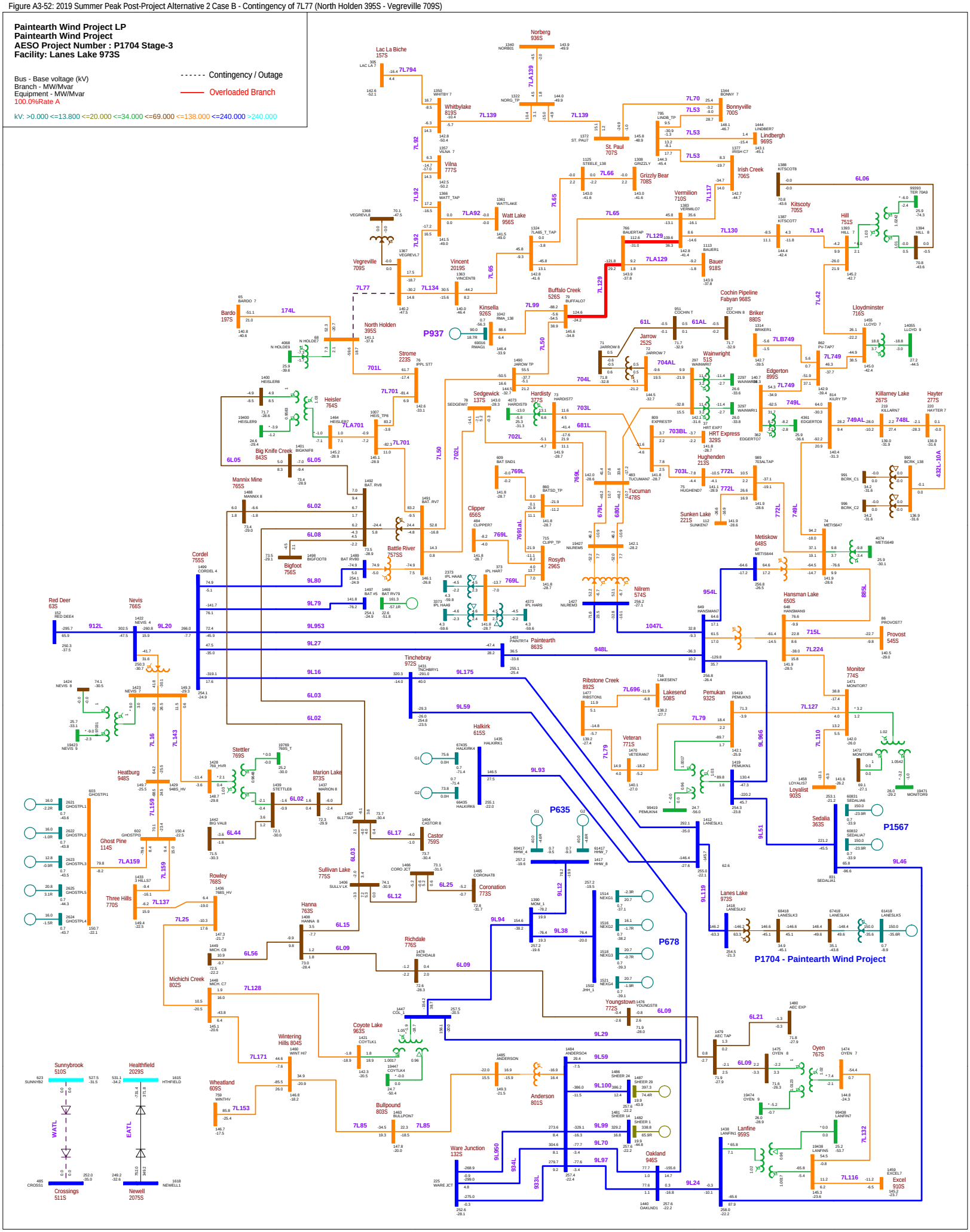
Paintearth Wind Project LP
Paintearth Wind Project
AESO Project Number : P1704 Stage-3
Facility: Lanes Lake 973S
Bus - Base voltage (kV)
Branch - MW/Mvar
Equipment - MW/Mvar
100.0%Rate A
kV: >0.000 <=13.800 <=20.000 <=34.000 <=69.000 <=138.000 <=240.000 >240.000
Contingency / Outage
Overloaded Branch
Norberg 936S
Lac La Biche 157S
Whitbylake 819S
Vilna 777S
Watt Lake 956S
Vegreville 709S
Vincent 2019S
Kinsella 926S
Buffalo Creek 526S
St. Paul 707S
Bonnyville 700S
Lindbergh 969S
Irish Creek 706S
Grizzly Bear 708S
Vermilion 710S
Bauer 918S
Kitscoty 705S
Hill 751S
Cochin Pipeline
Fabyan 968S
Briker 880S
Lloydminster 716S
Bardo 197S
North Holden 395S
P937
Strome 223S
Jarrow 252S
Wainwright 51S
Edgerton 899S
Killarney Lake 267S
Hayter 277S
Heisler 764S
Sedgewick 137S
Hardisty 377S
HRT Express 329S
Hughenden 213S
Big Knife Creek 843S
Mannix Mine 765S
Clipper 656S
Tucumar 478S
Sunken Lake 221S
Metiskow 648S
Hansman Lake 650S
Provost 545S
Cordel 755S
Bigfoot 756S
Battle River 757SS
Rosyth 296S
Nilrem 574S
Paintearth 863S
Red Deer 63S
Nevis 766S
Tinchebray 972S
Ribstone Creek 892S
Lakesend 508S
Pemukan 932S
Monitor 774S
Heatburg 948S
Stettler 769S
Marion Lake 873S
Halkirk 615S
Veteran 771S
Loyalist 903S
Ghost Pine 114S
Castor 759S
Sedalia 363S
P1567
Rowley 768S
Three Hills 770S
Sullivan Lake 775S
Coronation 773S
Lanes Lake 973S
P635
P678
P1704 - Paintearth Wind Project
Hanna 763S
Richdale 776S
Youngstown 772S
Michichi Creek 802S
Coyote Lake 963S
Wintering Hills 804S
Wheatland 609S
Bullpound 803S
Anderson 801S
Ware Junction 132S
Oakland 946S
Lanfine 959S
Oyen 767S
Excel 910S
Sunnybrook 510S
Healthfield 2029S
Crossings 511S
Newell 2075S
WATL
EATL
Cochin T
Cochin 8
Jarrow 9
Jarrow 7
Jarrow TP
Wainwright 7
Wainwright 8
Wainwright 9
Wainwrir1
Wainwrir7
Edgerton 7
Edgerton9
Edgerton8
Edgerton7
Briker1
Lloyd 7
Lloyd 8
Lloyd 9
Kitscot7
Kitscot8
Kitscot9
Hill 7
Hill 8
Bauer1
Vermilo7
Vermilo8
Bonny 7
Lindber7
Lindber8
Irish C7
Irish C8
Irish C9
Grizzly
Steele_138
Steele_TP
Lin08_TP
Lin08_138
St. Paul
Paul07
Norb_TP
Norb01
Norb_138
Norb_69
Lac La 7
Lac La 8
Whitby 7
Whitby 8
Vilna 7
Vilna 8
Watt_Tap
Watt Lake
Wattlake
Vegrevl7
Vegrevl8
Vegrev_69
Vincent8
Kinsella
Rma_138
Rma1
Rma2
Rma3
Rma4
Rma5
Rma6
Rma7
Rma8
Rma_69
Buffalo7
Buffalo8
Buffalo9
Buffalo_69
Bardo 7
Bardo 8
Bardo 9
Bardo_69
N Holde7
N Holde8
N Holde9
N Holde_69
Strome
Ippl St7
Ippl St8
Ippl St9
Ippl_69
Heisler7
Heisler8
Heisler9
Heisler_69
Sedgewi7
Sedgewi8
Sedgewi9
Sedgewi_69
Hardist7
Hardist8
Hardist9
Hardist_69
Jarrow_TP
Jarrow_69
Wainwr_69
Edgerton_69
Briker_69
Lloyd_69
Kitscot_69
Hill_69
Bauer_69
Vermilo_69
Bonny_69
Lindber_69
Irish_69
Grizzly_69
Steele_69
Lin08_69
Paul_69
Norb_69
Lac La_69
Whitby_69
Vilna_69
Watt_69
Vegrev_69
Vincent_69
Kinsella_69
Buffalo_69
Bardo_69
N Holde_69
Strome_69
Heisler_69
Sedgewi_69
Hardist_69

Figure A3-53: 2019 Summer Peak Post-Project Alternative 2 Case B - Contingency of EATL (Newell 2075S - Heathfield 2029S)

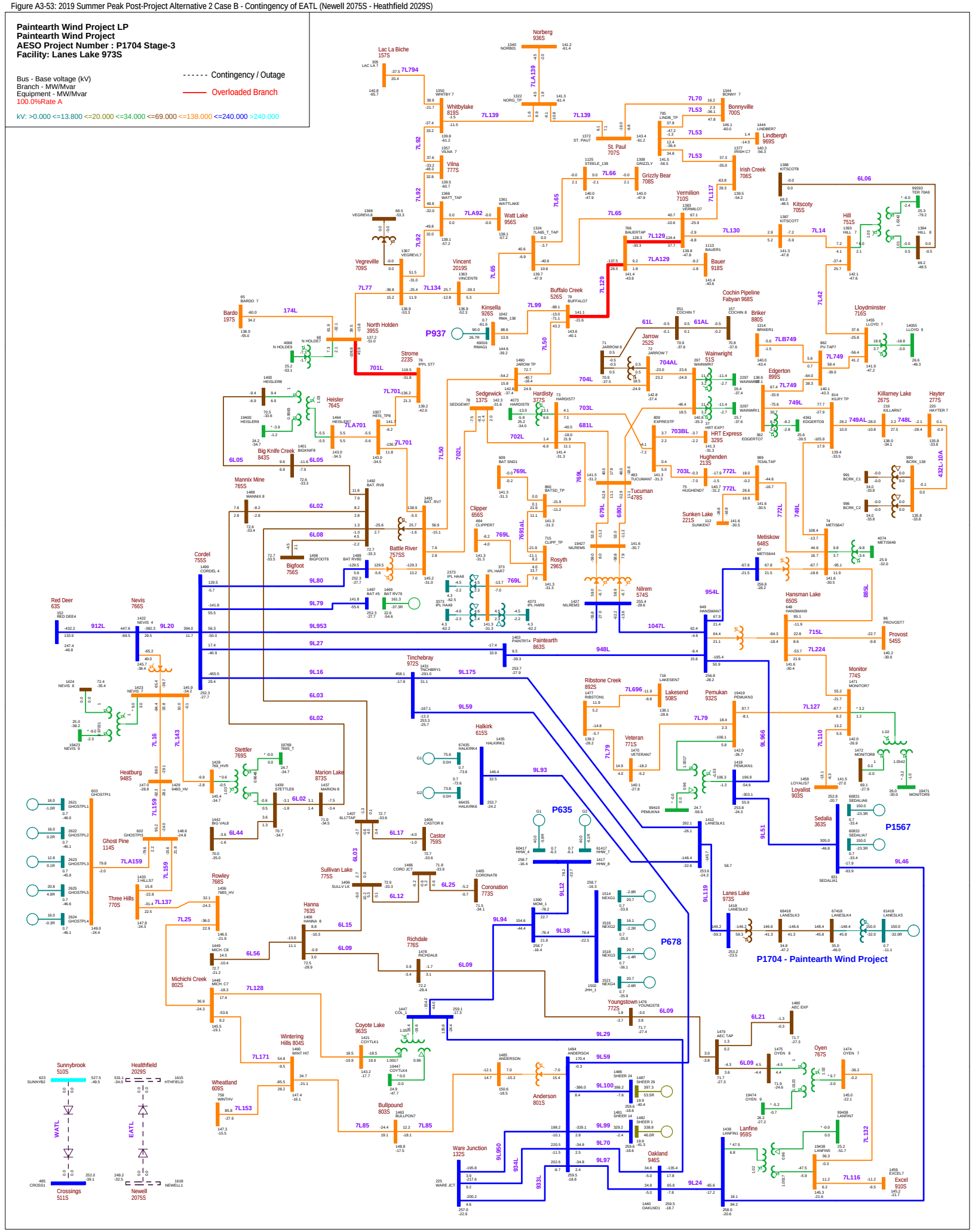

Figure A3-54: 2019 Summer Peak Post-Project Alternative 2 Case B - Contingency of 7L701\7LA701\701L (Battle River 757S - Heisler 764S - Strome 223S)

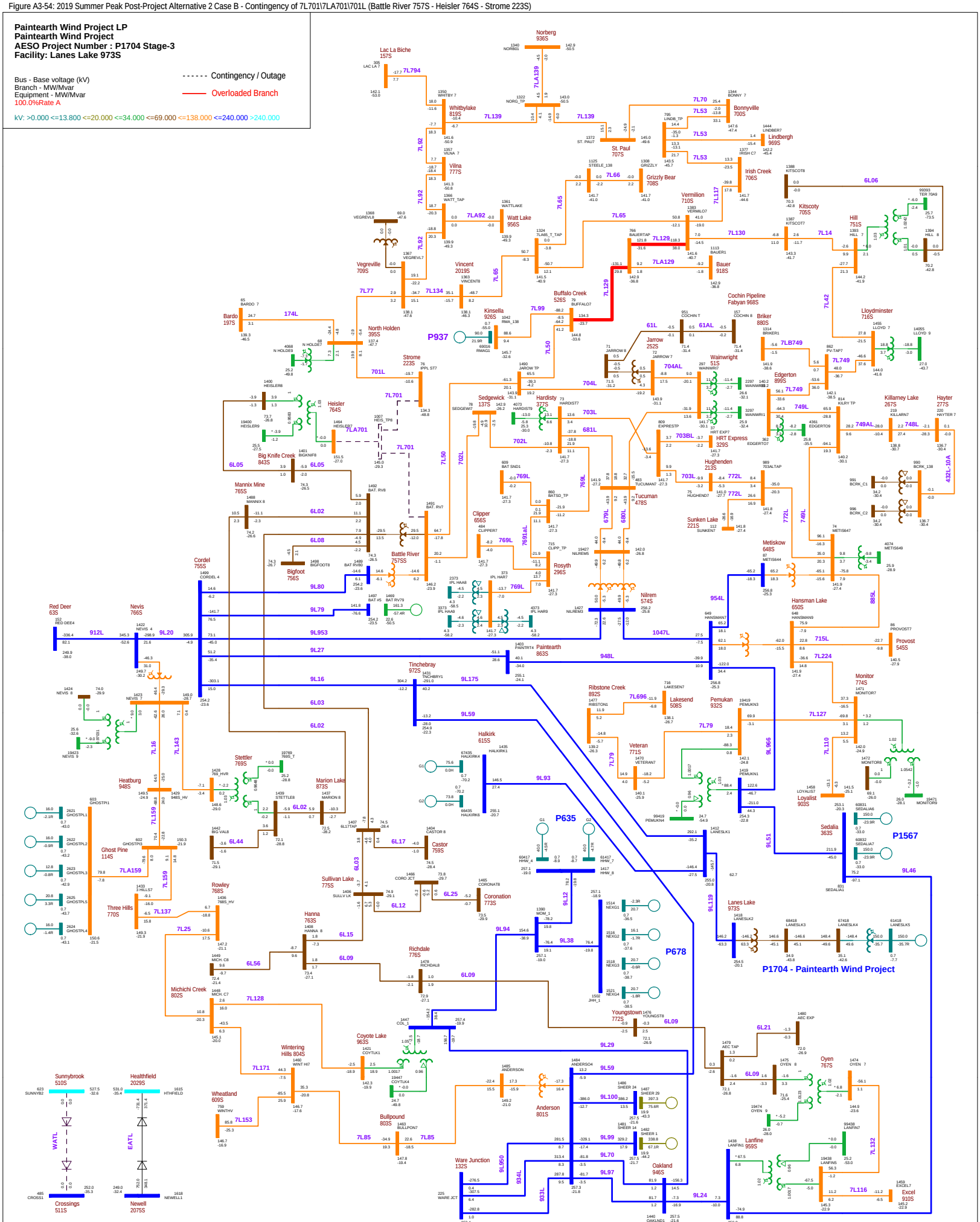

Figure A3-55: 2019 Summer Peak Post-Project Alternative 2 Case B - Contingency of 9L933\933L (Ware Junction 132S - Anderson 801S)

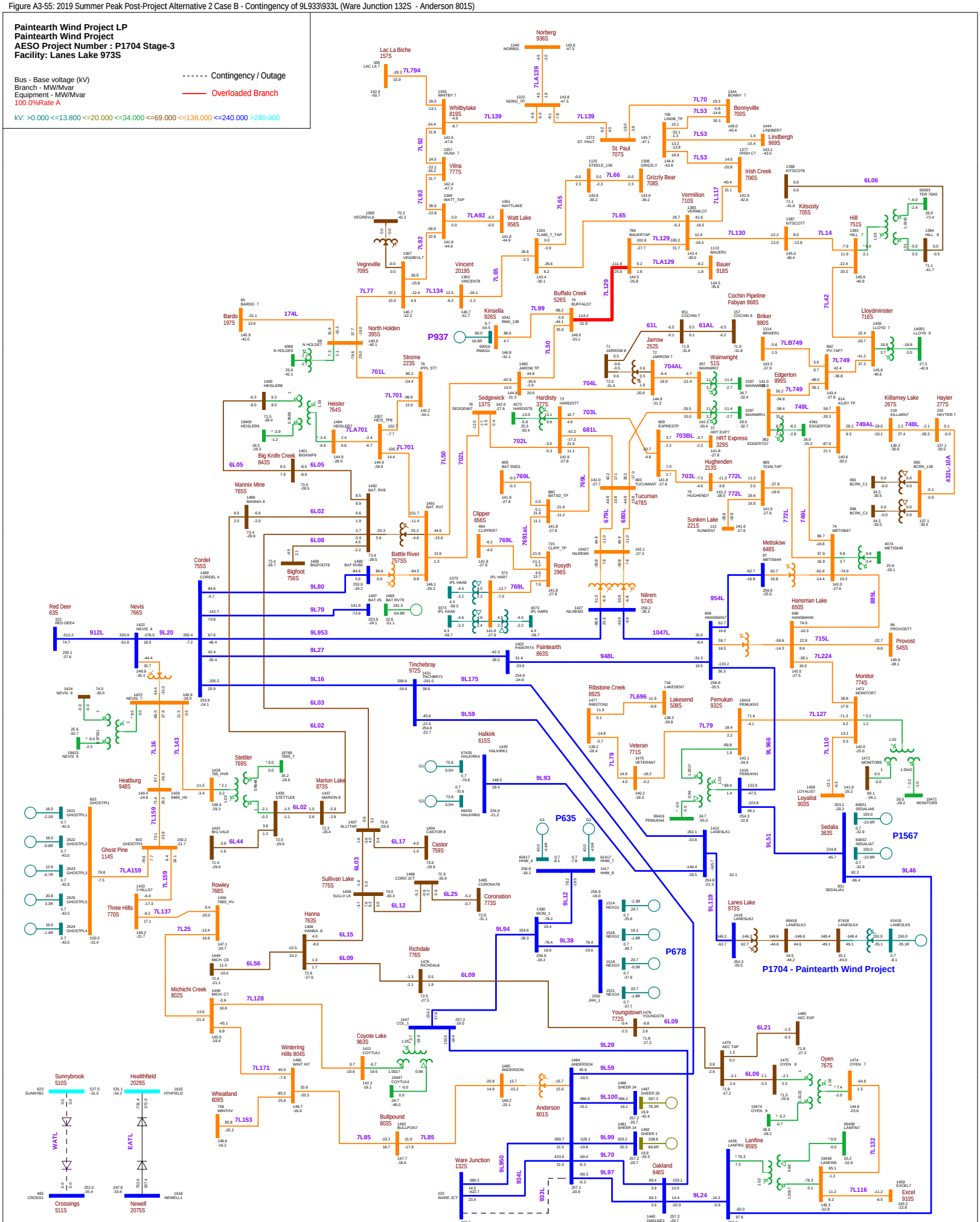

Figure A3-56: 2019 Summer Peak Post-Project Alternative 2 Case B - Contingency of 766S901T (Nevis 766S Transformer 901T)

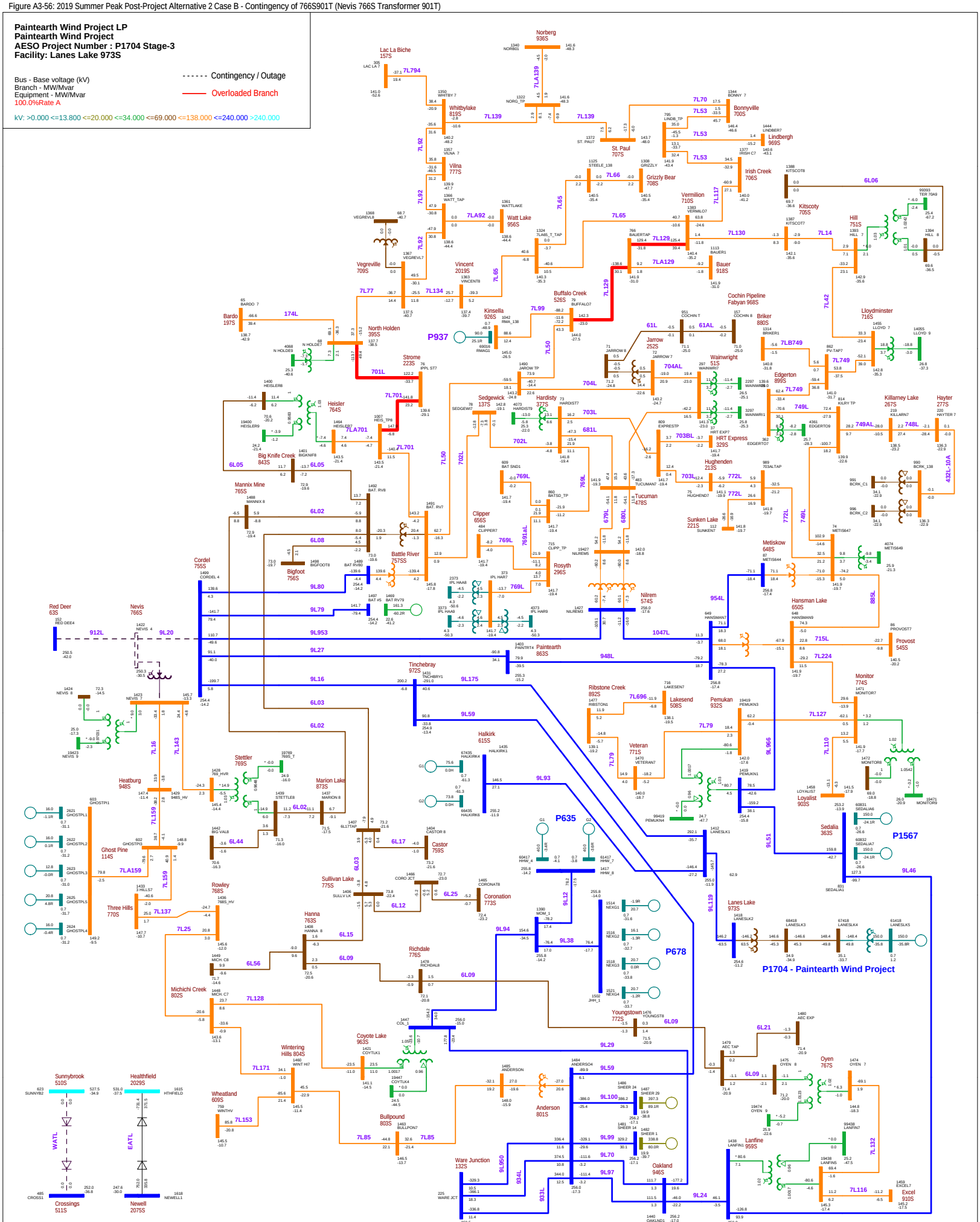

Figure A3-57: 2019 Summer Peak Post-Project Alternative 2 Case B - Contingency of 749L\749AL (Metiskow 648S - Edgerton 899S)

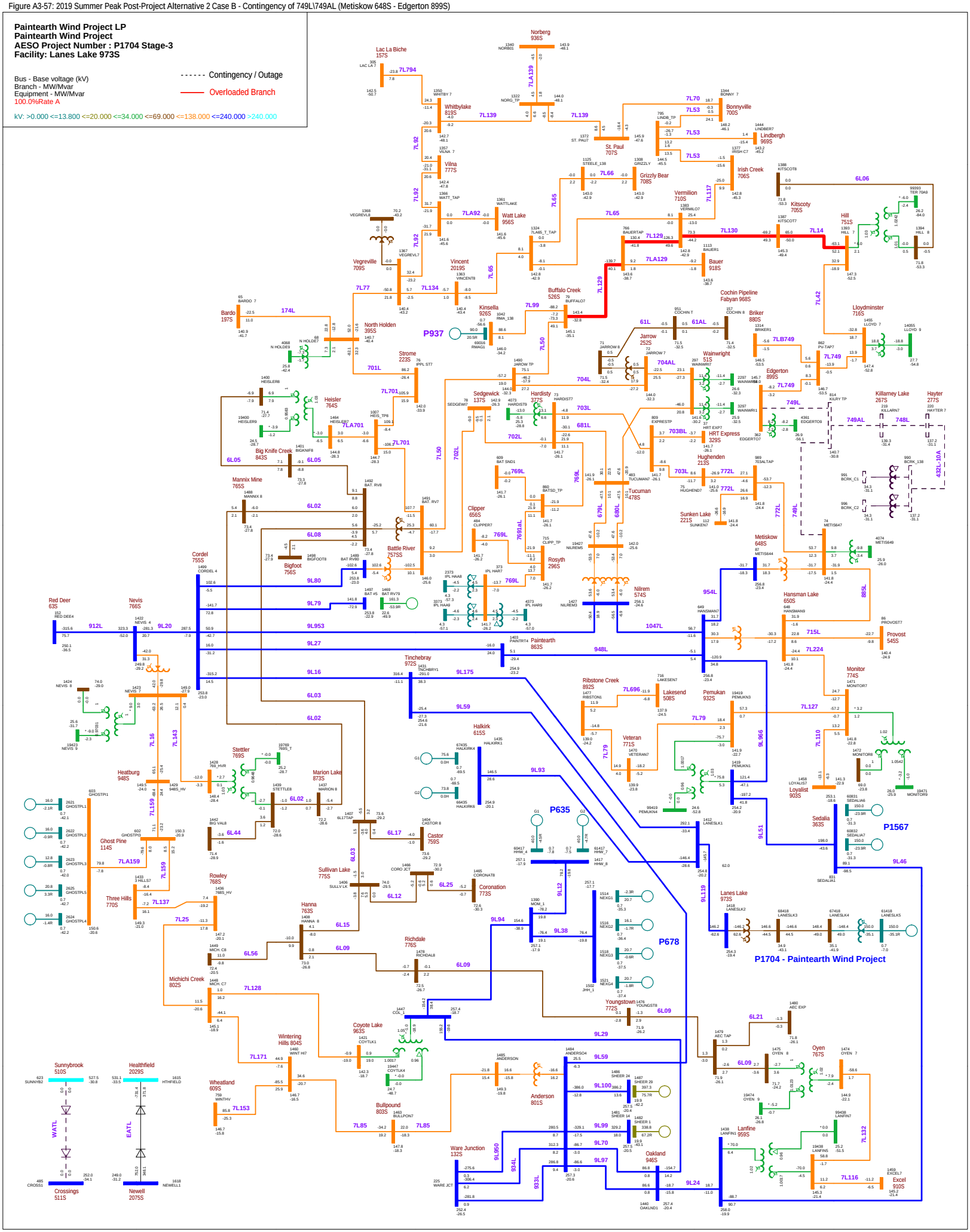

Figure A3-58: 2019 Summer Peak Post-Project Alternative 2 Case B - Contingency of 912L\9L912 (Red Deer 63S - Nevis 766S)

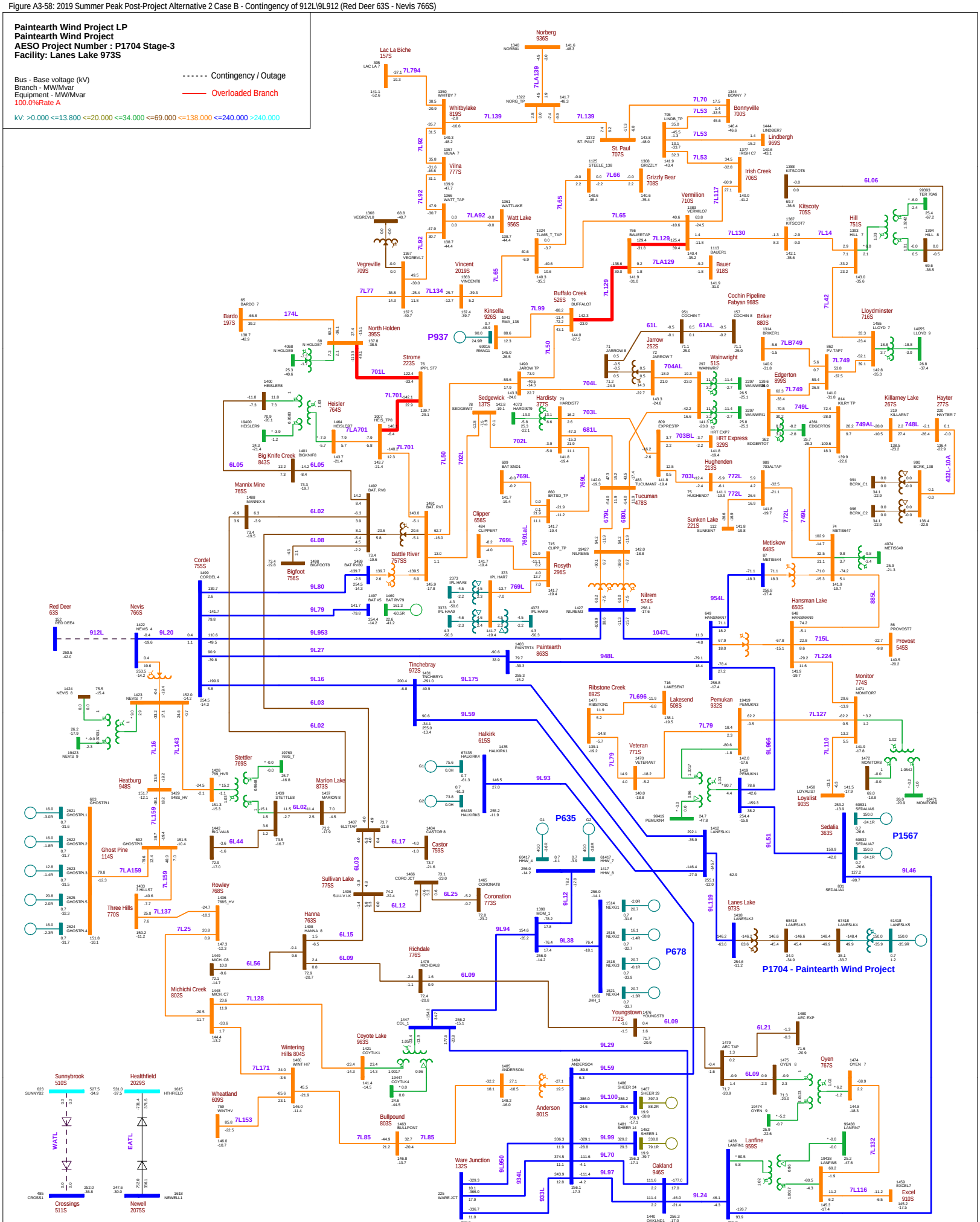

Figure A3-59: 2019 Summer Peak Post-Project Alternative 2 Case B - Contingency of 9L934\934L (Ware Junction 132S - Anderson 801S)

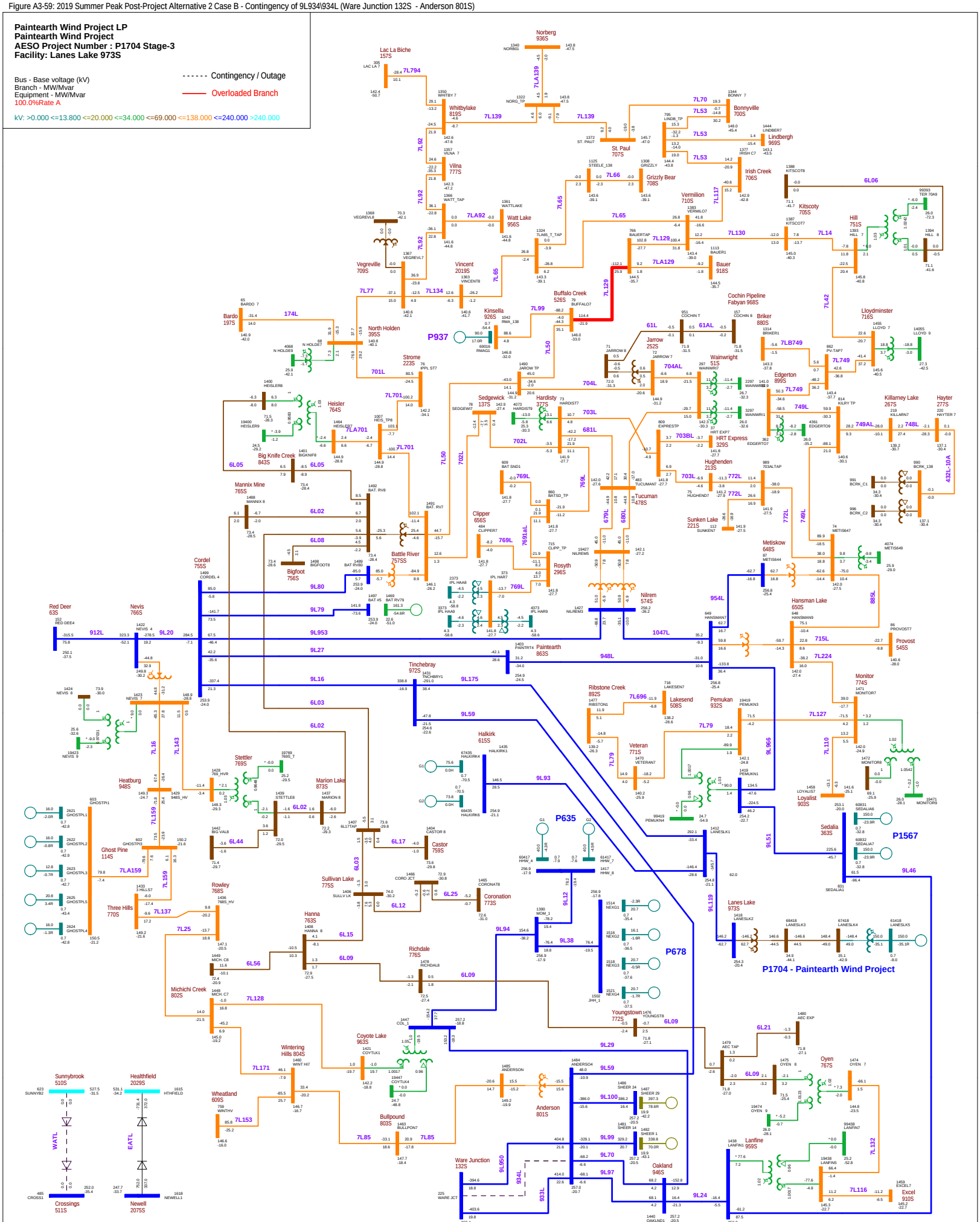

Figure A3-60: 2019 Summer Peak Post-Project Alternative 2 Case B - Contingency of 9L16 (Tinchebray 972S - Cordel 755S)

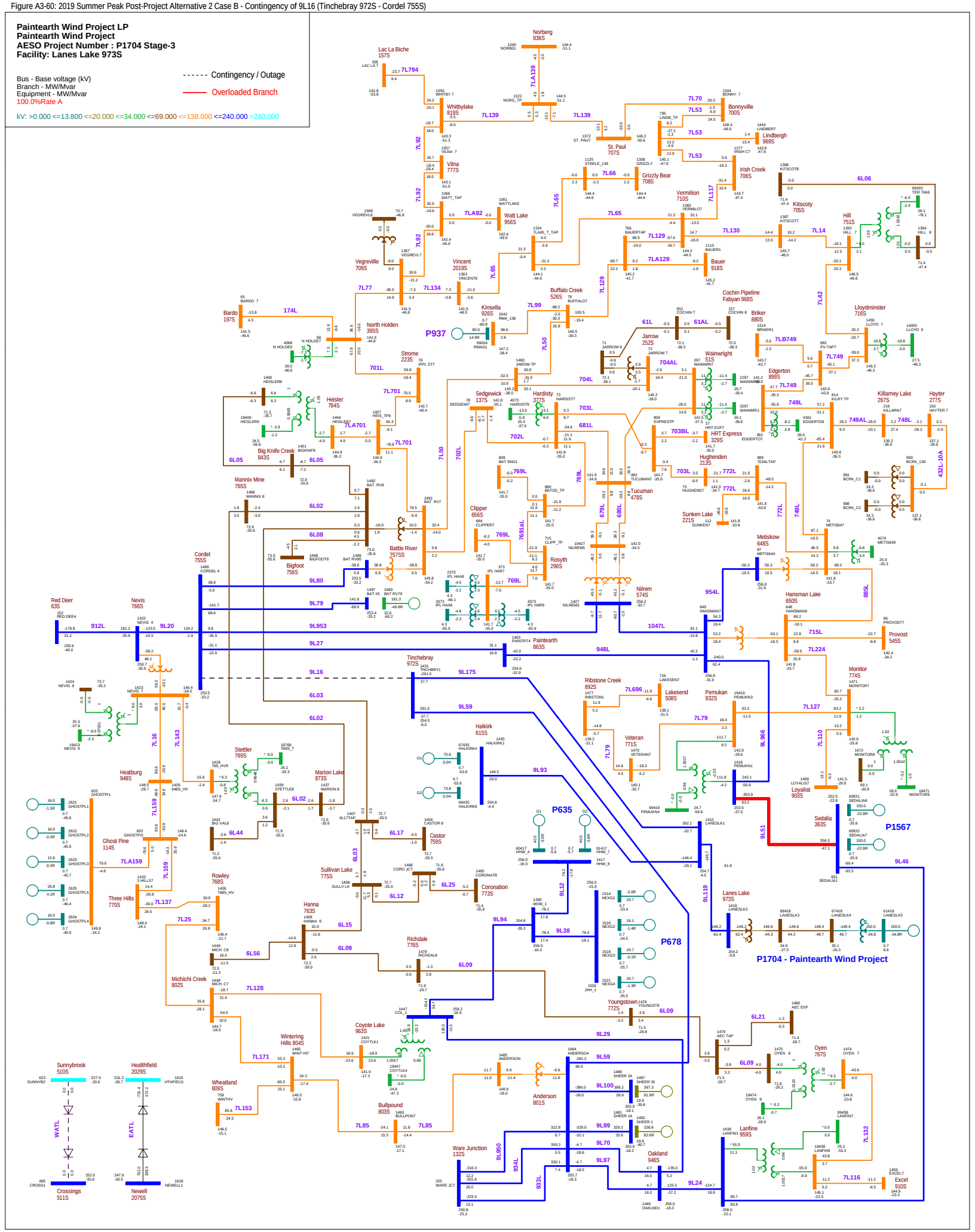

Figure A3-61: 2019 Summer Peak Post-Project Alternative 2 Case B - Contingency of 885L (Hansman Lake 650S - Metiskow 648S)

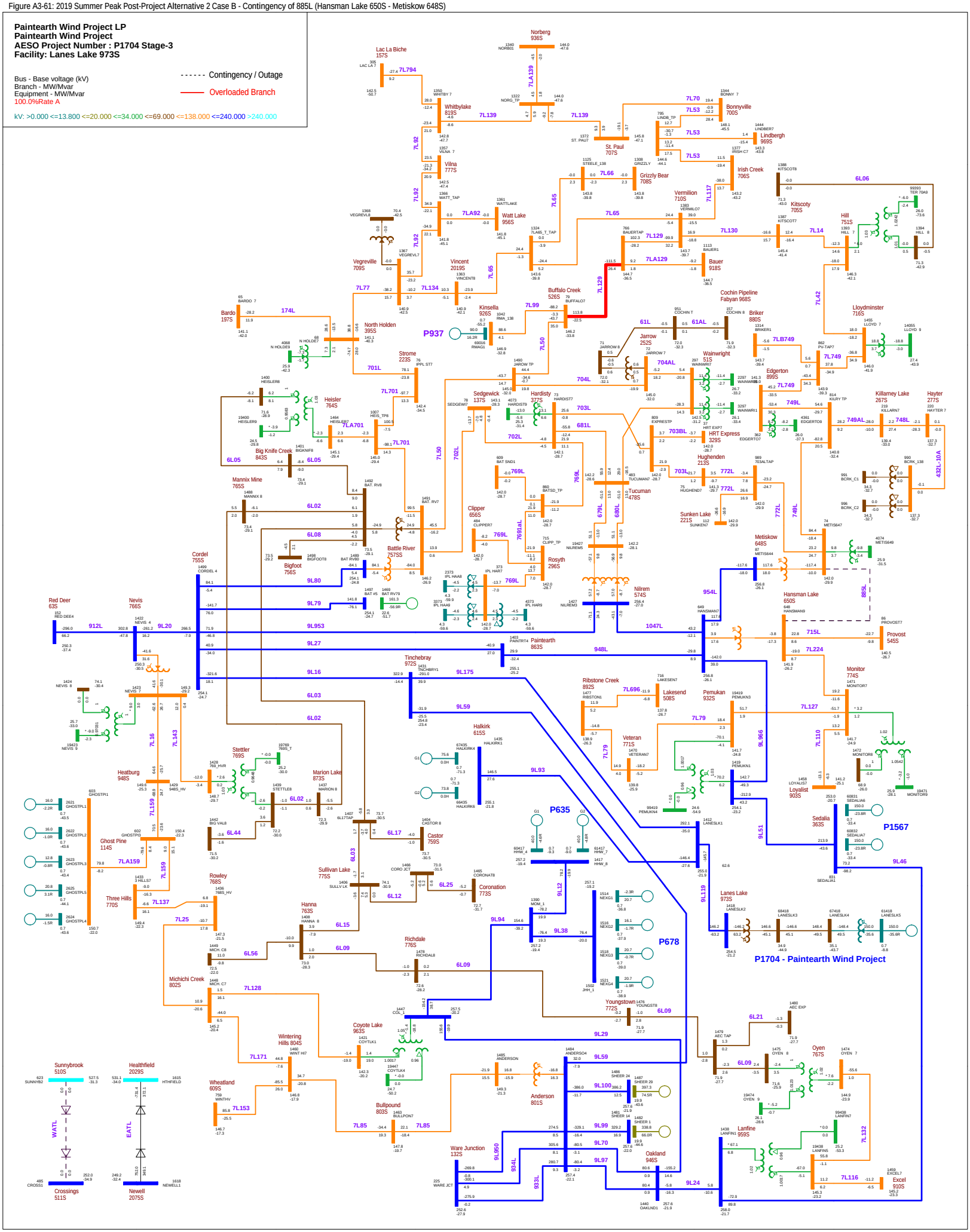

Figure A3-62: 2019 Winter Peak Post-Project Alternative 2 Case A - N-0 (System Normal Condition)

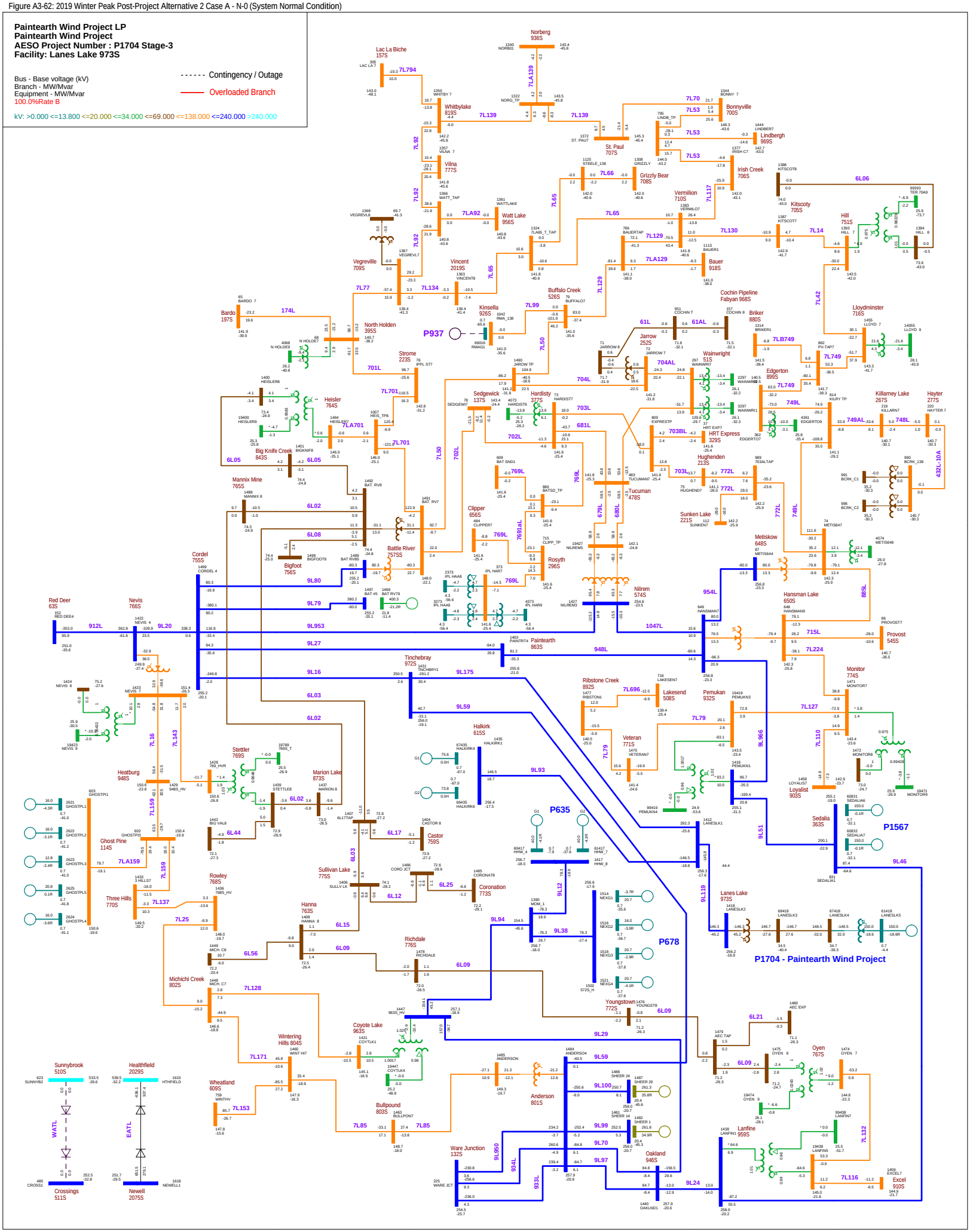

Figure A3-63: 2019 Winter Peak Post-Project Alternative 2 Case A - Contingency of 9L20 (Nevis 766S - Cordel 755S)

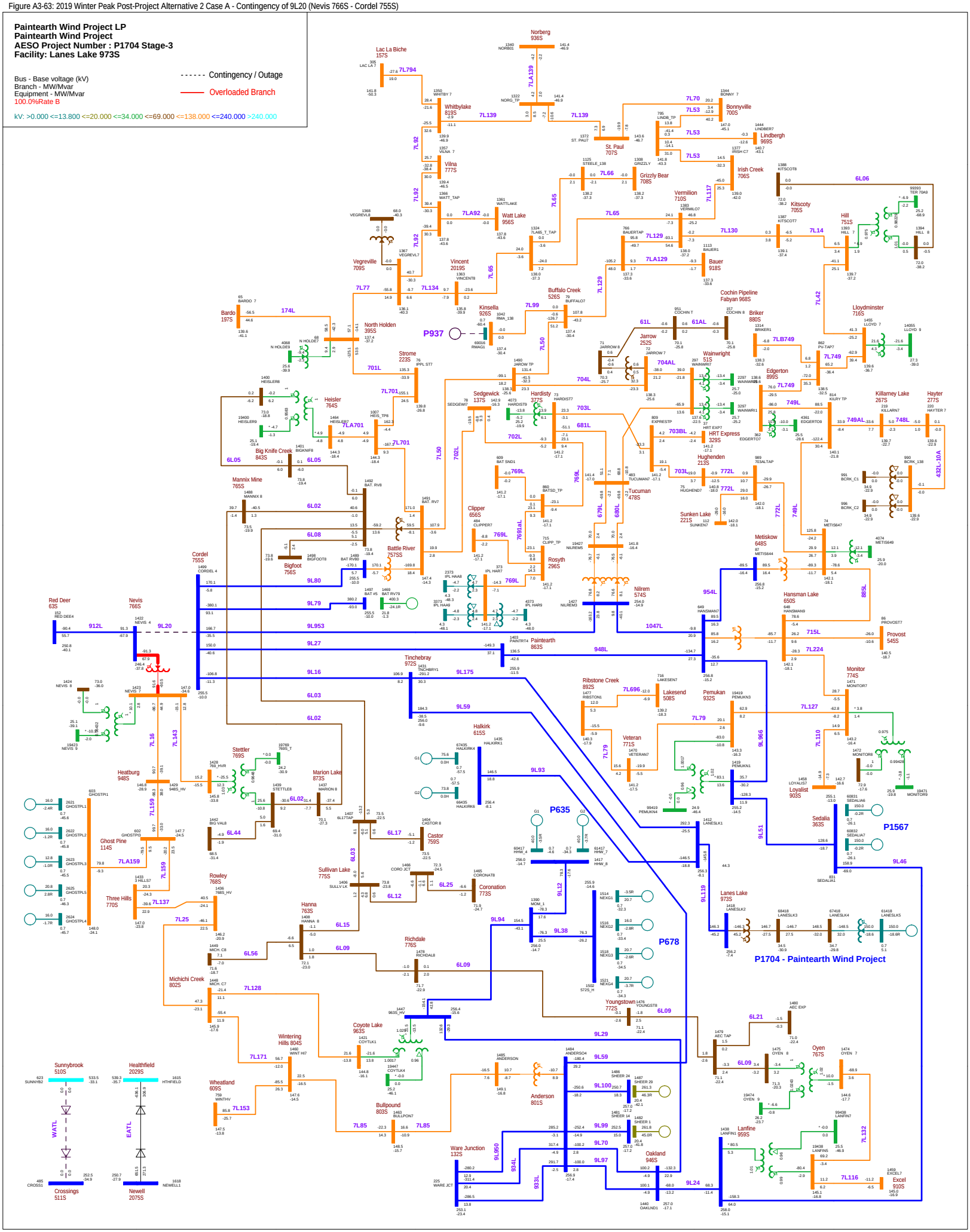

Figure A3-64: 2019 Winter Peak Post-Project Alternative 2 Case A - Contingency of 912L\9L912 (Red Deer 63S - Nevis 766S)

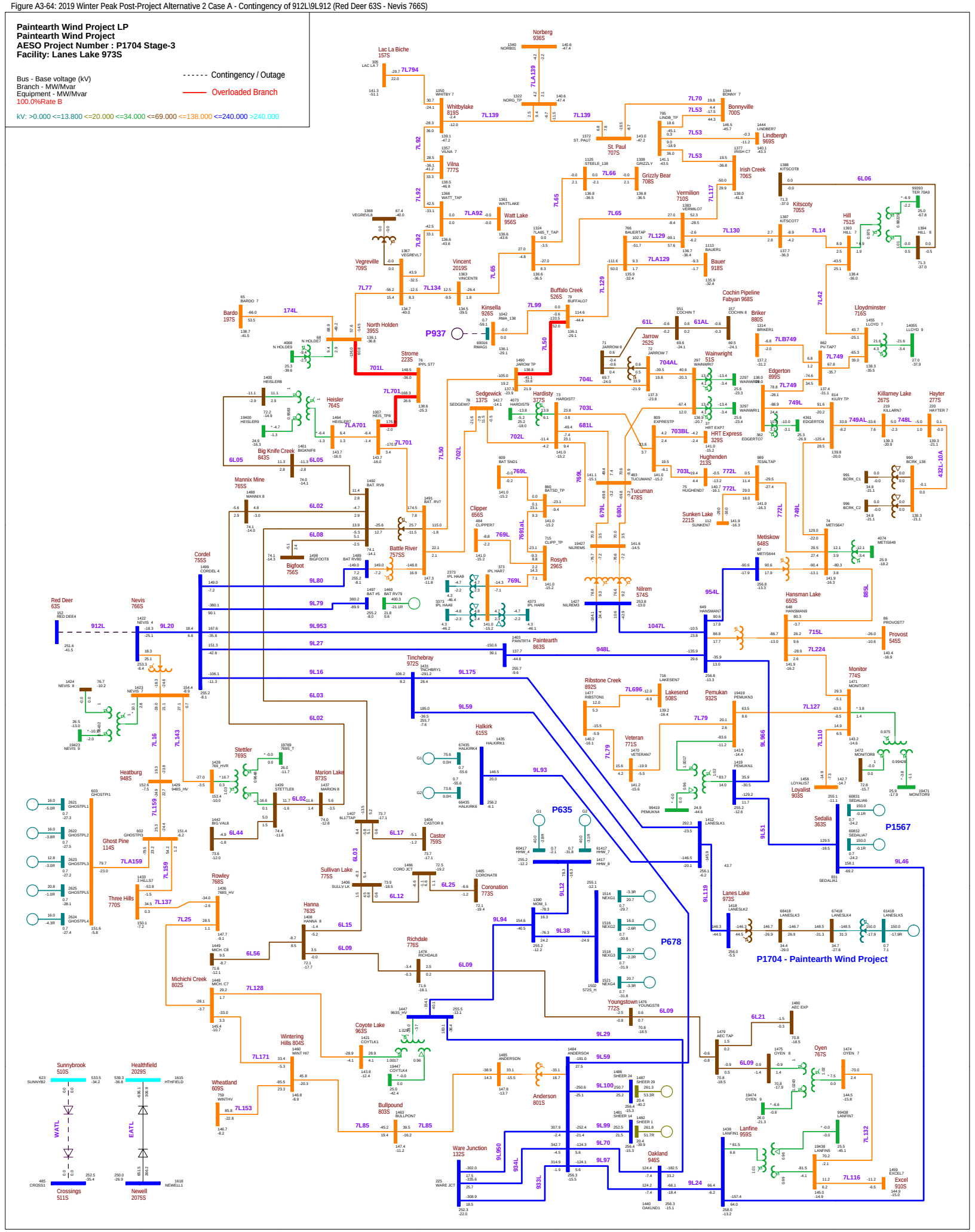

Figure A3-65: 2019 Winter Peak Post-Project Alternative 2 Case A - Contingency of 7L129\7LA129 (Buffalo Creek 526S - Vermilion 710S - Bauer 918S)

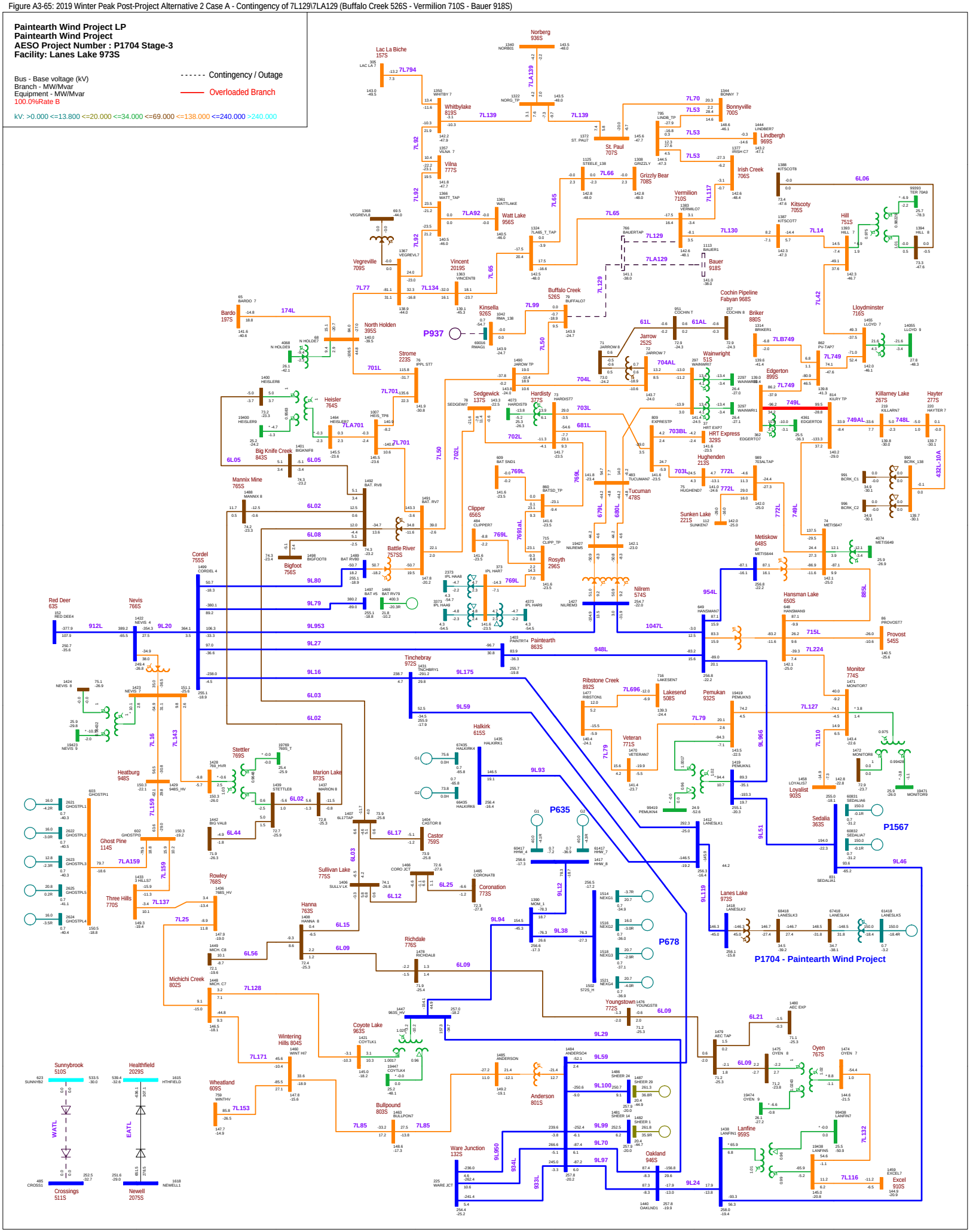

Figure A3-66: 2019 Winter Peak Post-Project Alternative 2 Case A - Contingency of 749L\749AL (Metiskow 648S - Edgerton 899S)

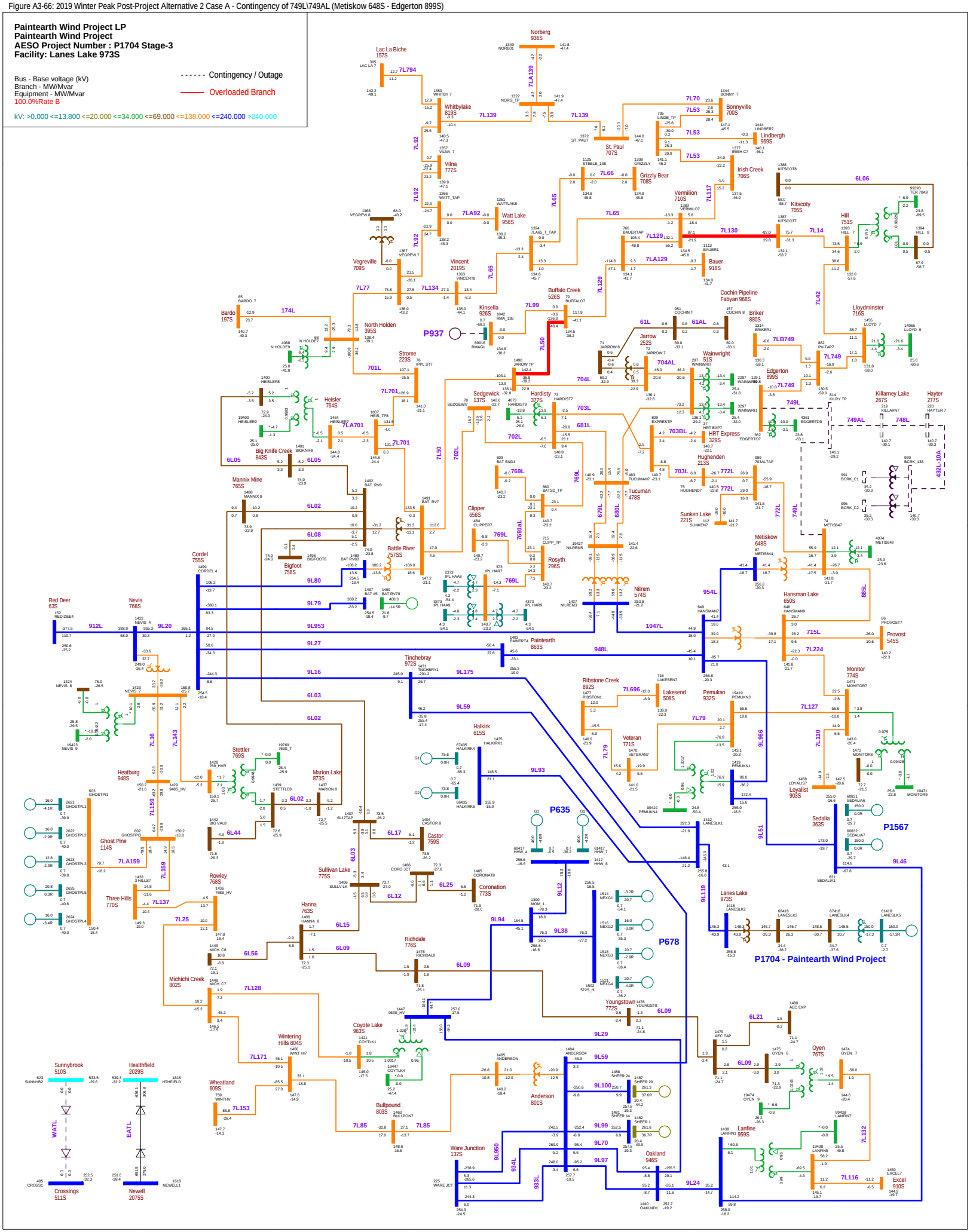

Figure A3-67: 2019 Winter Peak Post-Project Alternative 2 Case A - Contingency of 899ST3A (Edgerton 899S Transformer T3A)

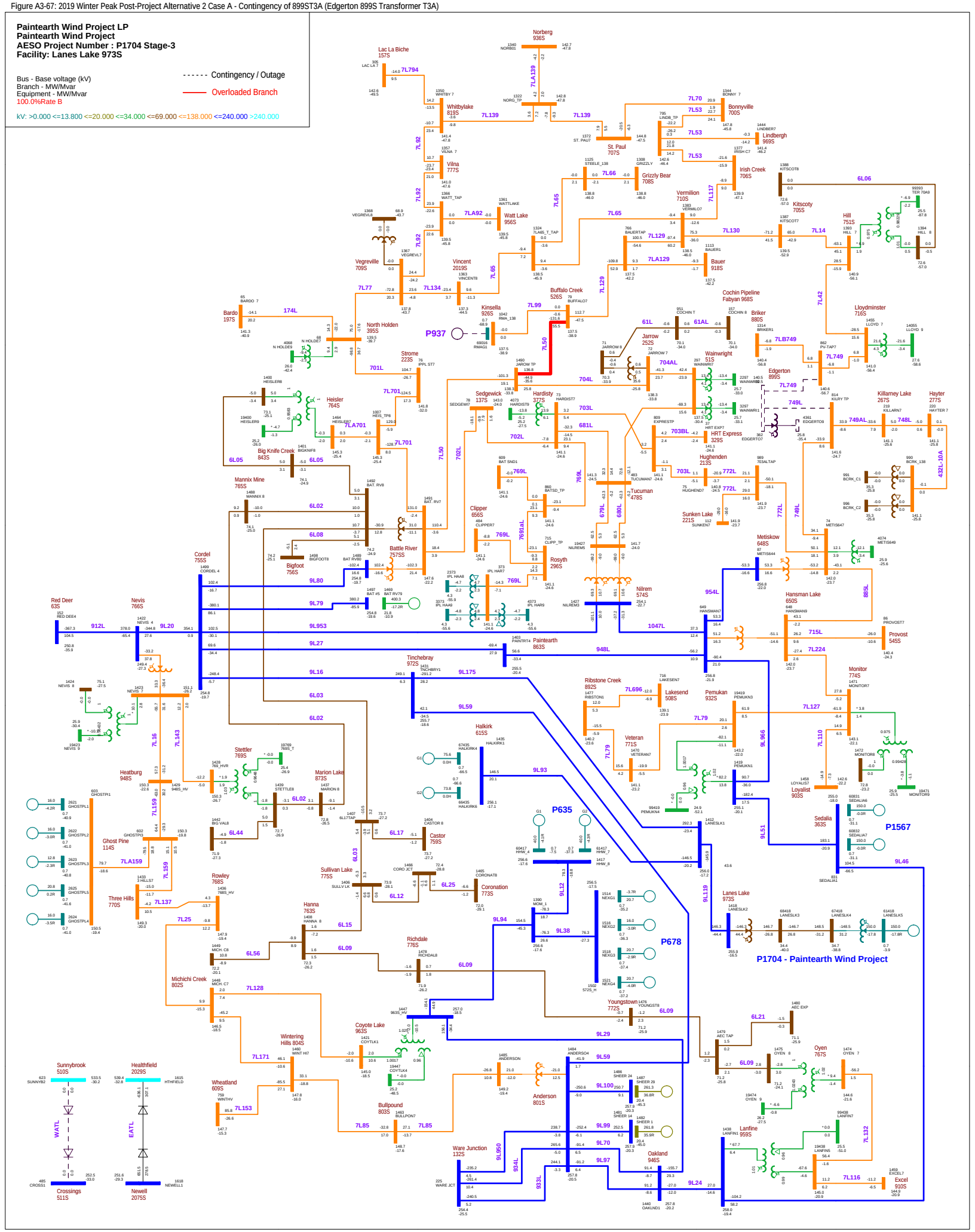

Figure A3-68: 2019 Winter Peak Post-Project Alternative 2 Case A - Contingency of 526ST1 or 526ST2 (Buffalo Creek 526S Transformer T1 or T2)

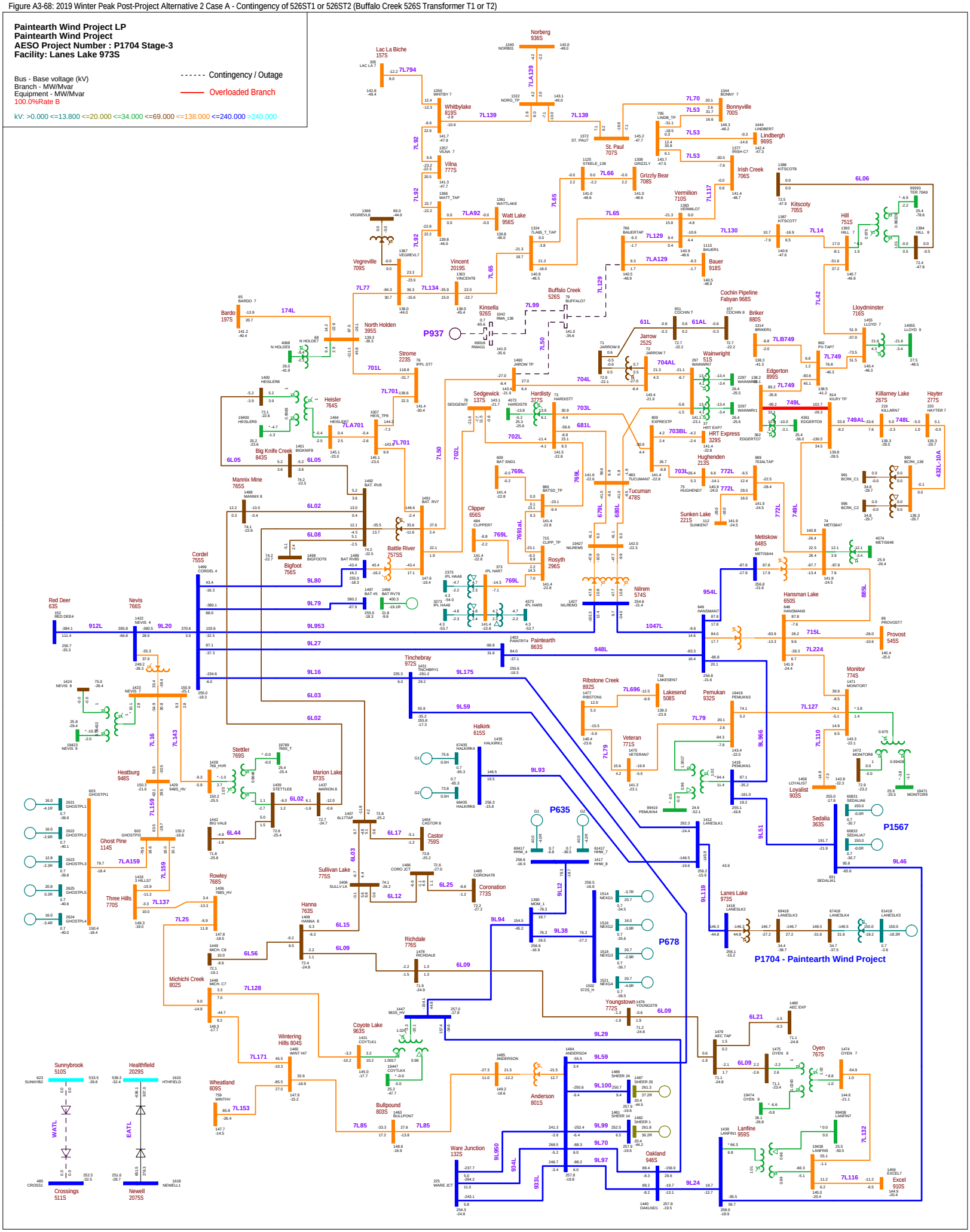

Figure A3-69: 2019 Winter Peak Post-Project Alternative 2 Case A - Contingency of 7L50 (Battle River 757S - Jarrow 252S - Buffalo Creek 526S)

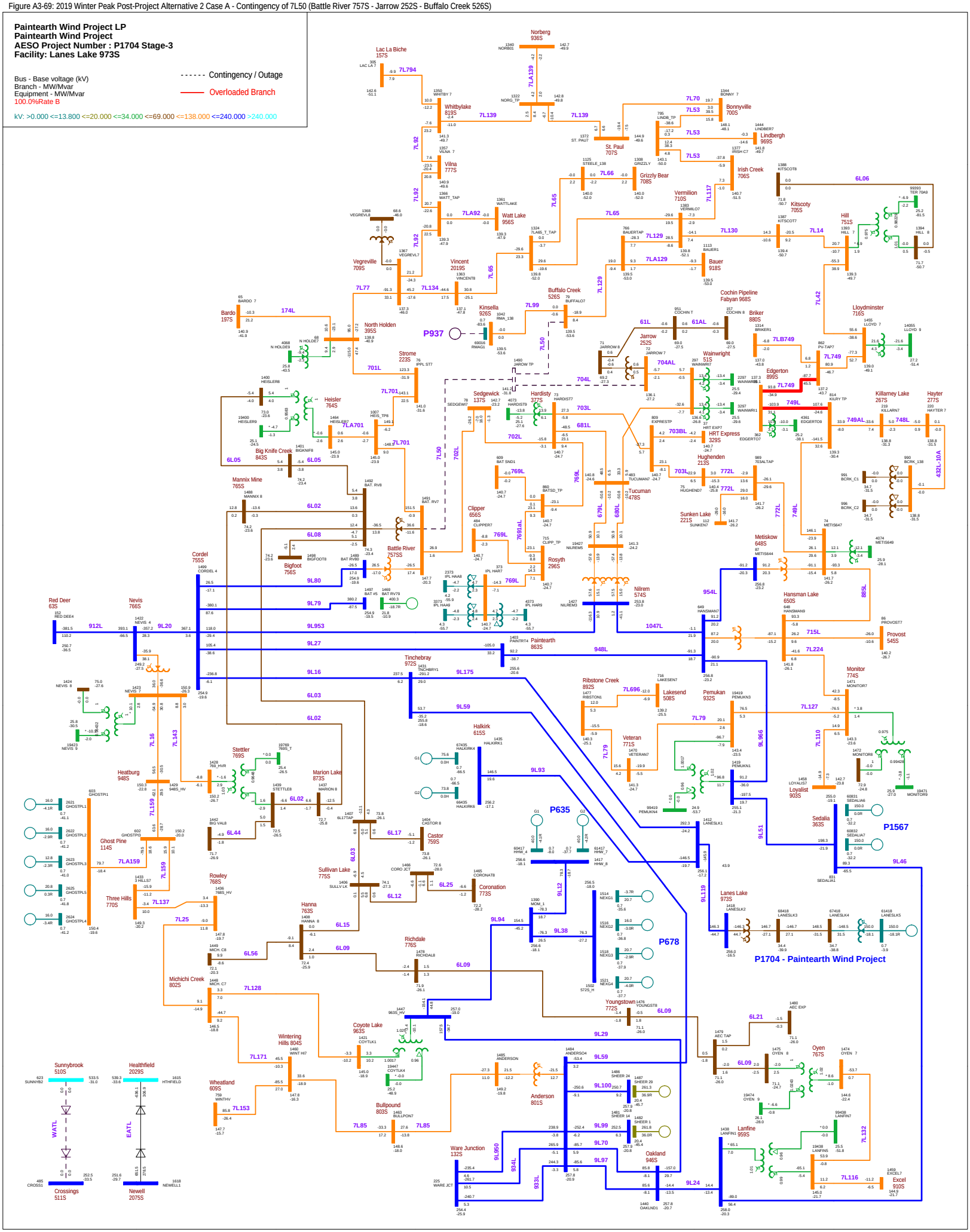

Figure A3-70: 2019 Winter Peak Post-Project Alternative 2 Case A - Contingency of 7L749\749L\7LB749 (Edgerton 899S - Briker 880S - Lloydminster 716S)

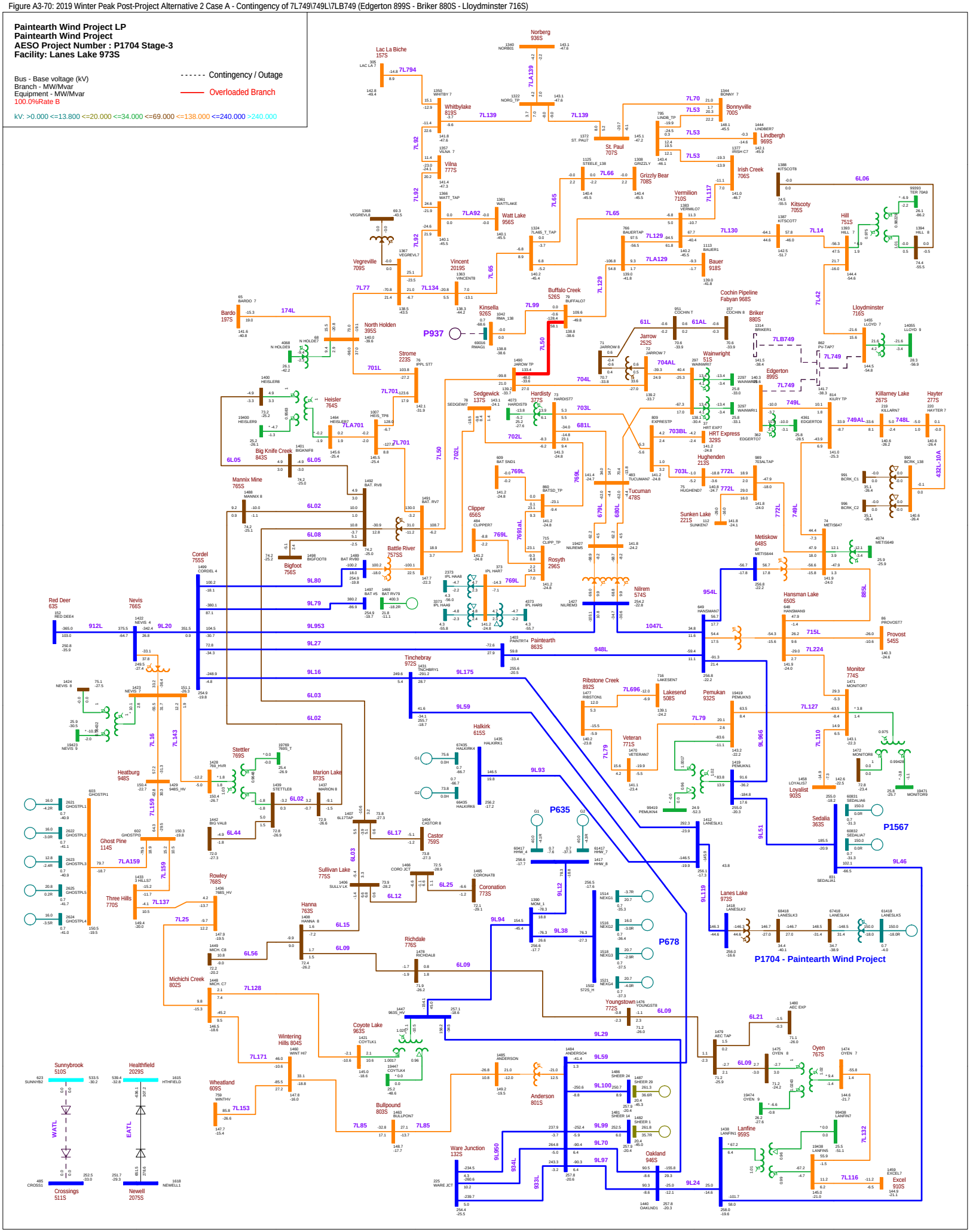

Figure A3-71: 2019 Winter Peak Post-Project Alternative 2 Case A - Contingency of 766S901T (Nevis 766S Transformer 901T)

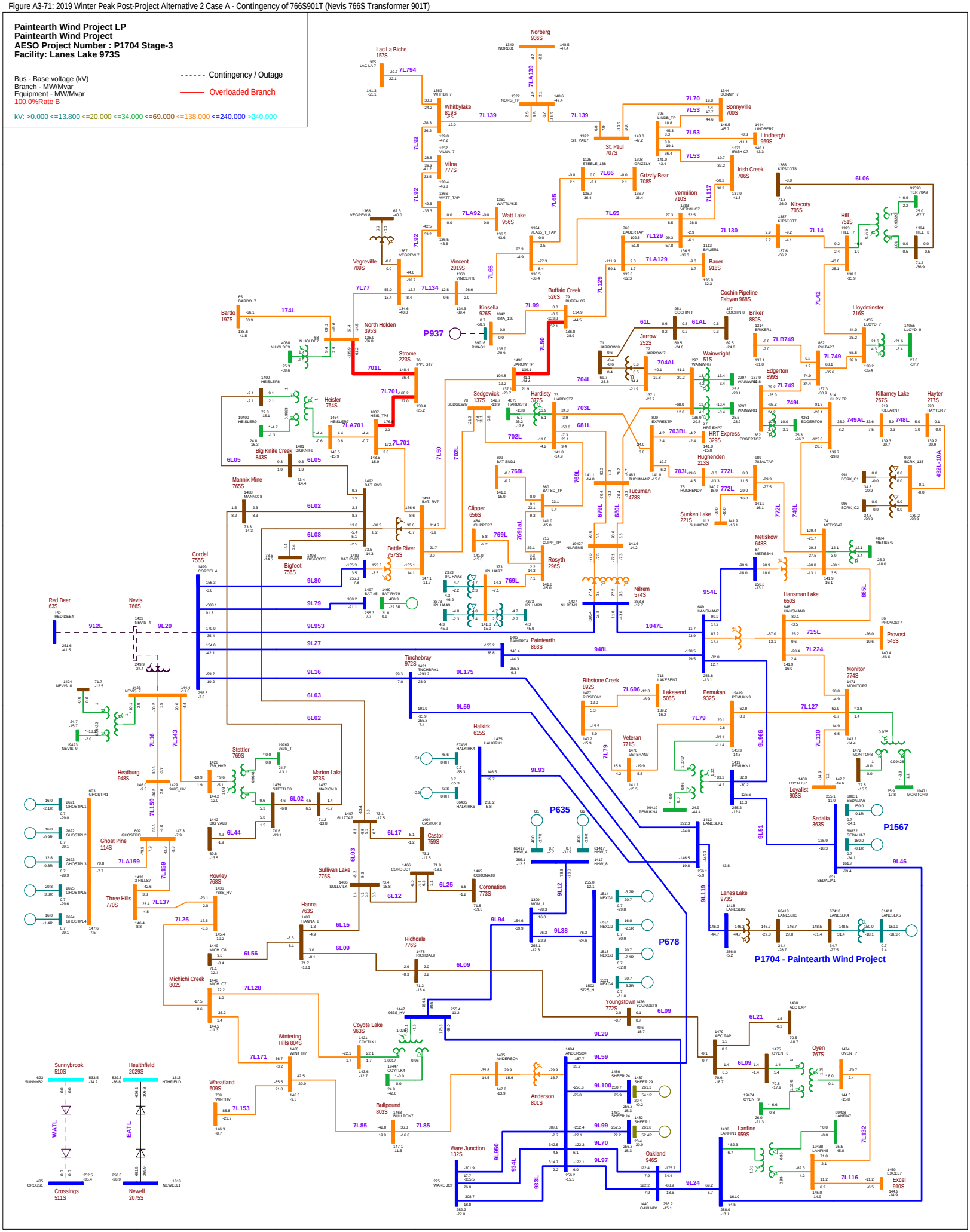

Figure A3-72: 2019 Winter Peak Post-Project Alternative 2 Case B - N-0 (System Normal Condition)

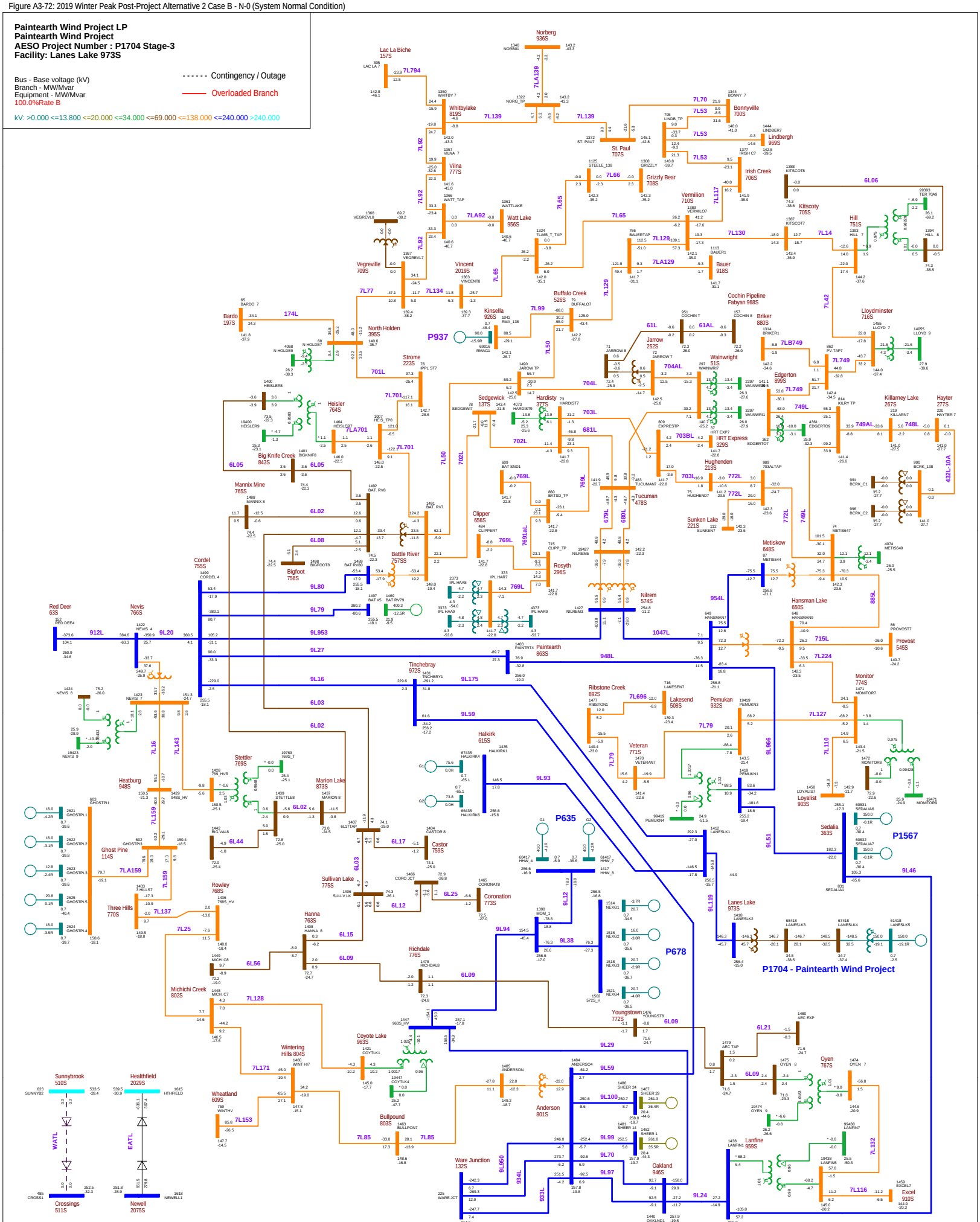

Figure A3-73: 2019 Winter Peak Post-Project Alternative 2 Case B - Contingency of 7L749\749L\7LB749 (Edgerton 899S - Briker 880S - Lloydminster 716S)

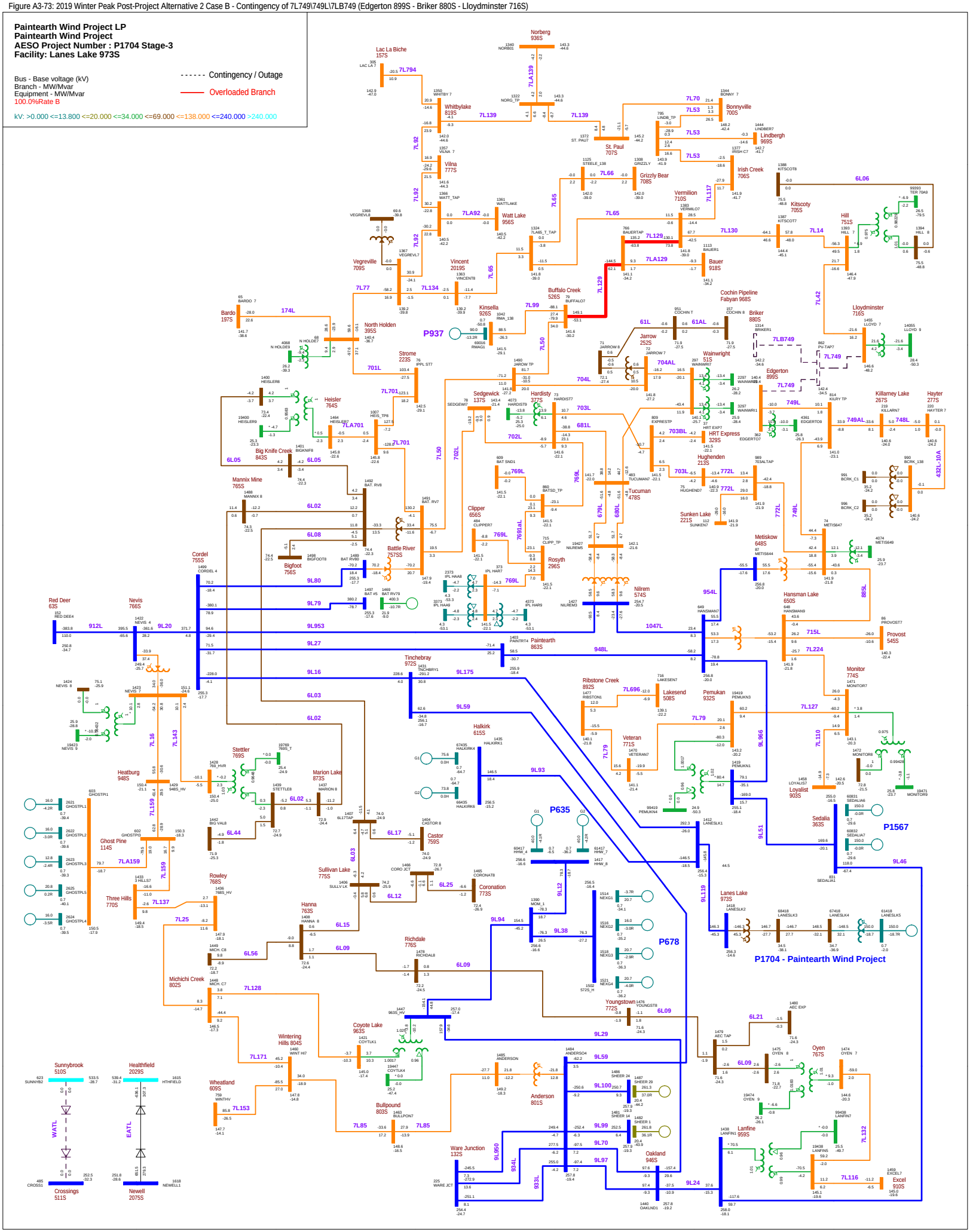

Figure A3-74: 2019 Winter Peak Post-Project Alternative 2 Case B - Contingency of EATL (Newell 2075S - Heathfield 2029S)

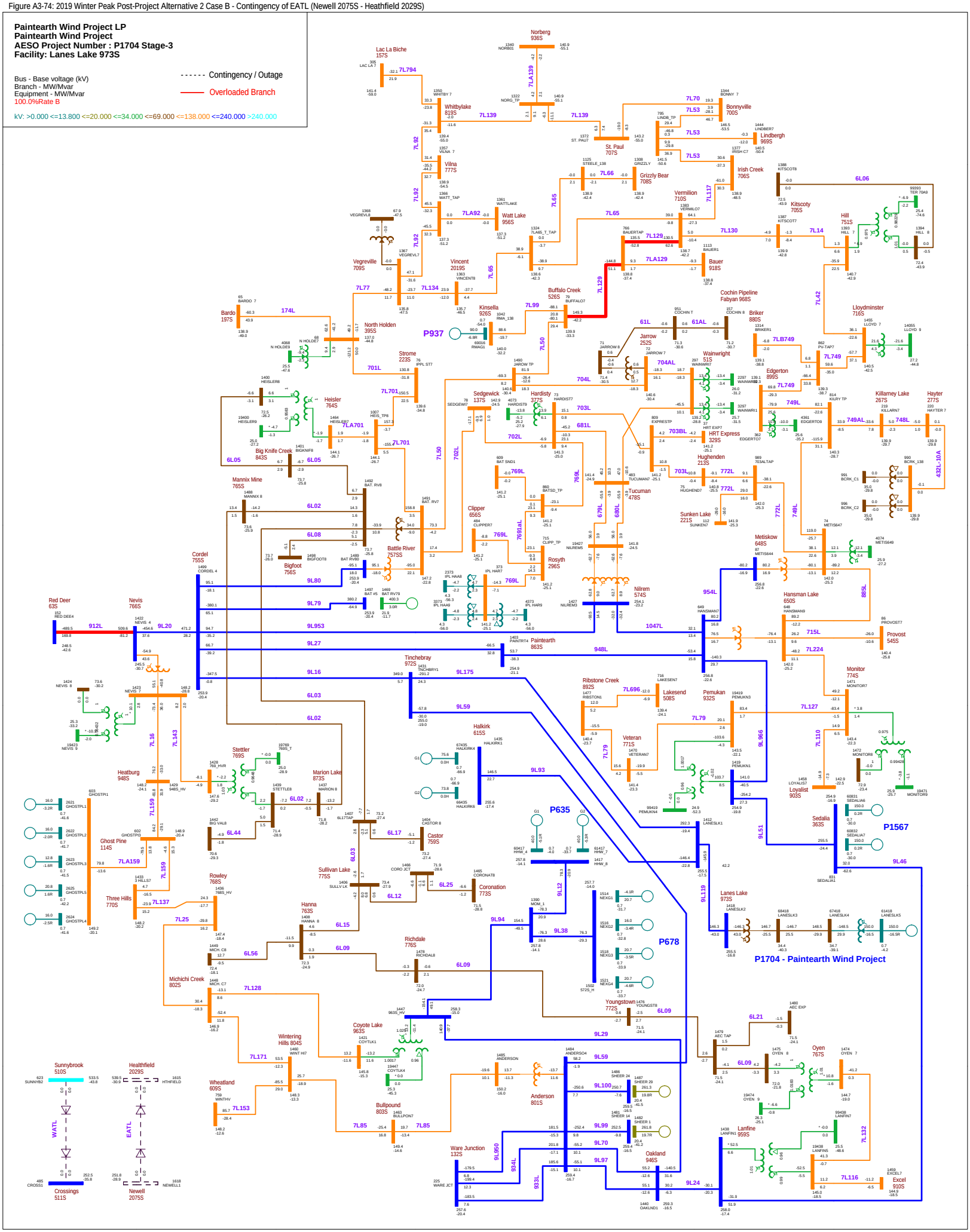

Figure A3-75: 2019 Winter Peak Post-Project Alternative 2 Case B - Contingency of 899ST3A (Edgerton 899S Transformer T3A)

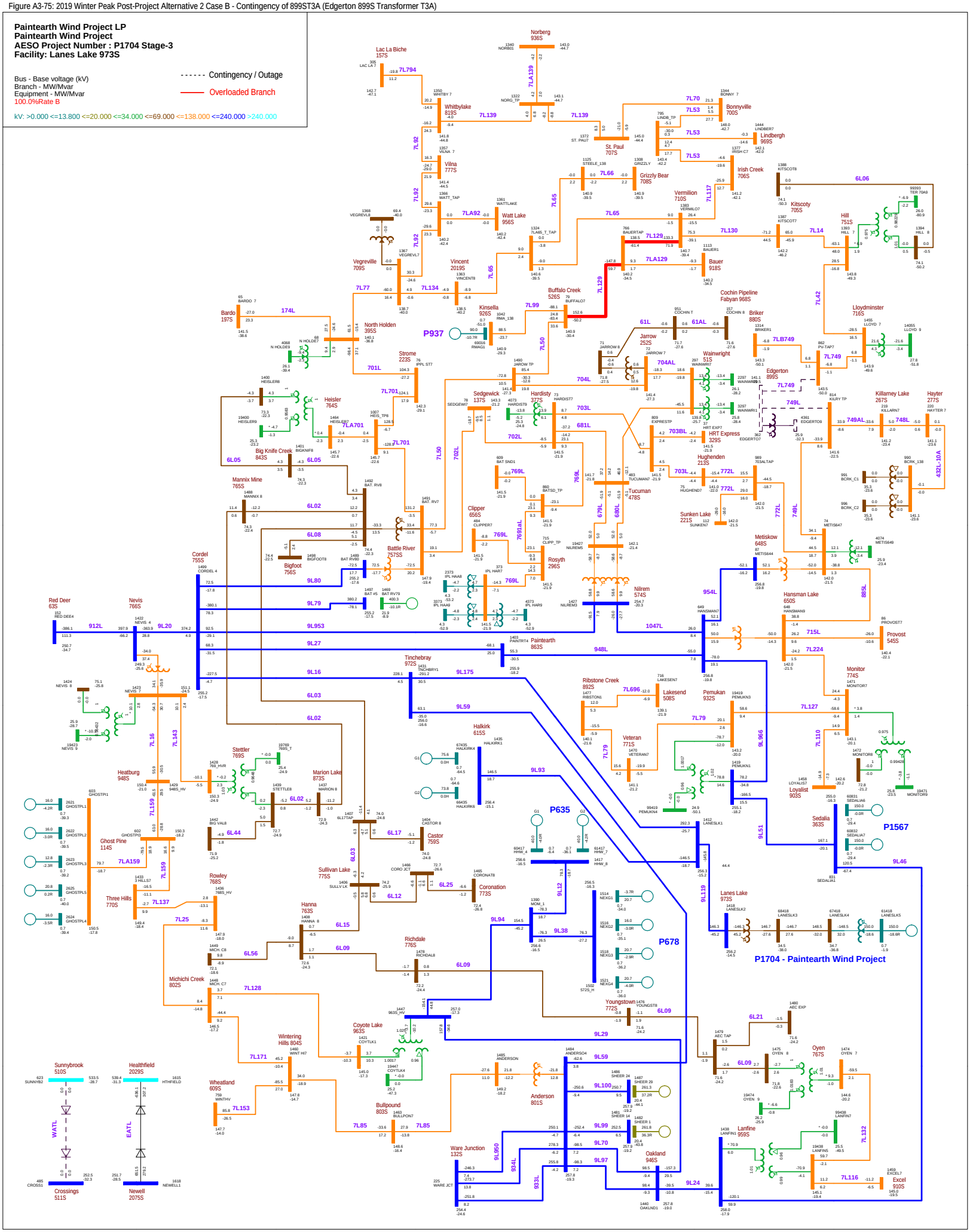

Figure A3-76: 2019 Winter Peak Post-Project Alternative 2 Case B - Contingency of 9L20 (Nevis 766S - Cordel 755S)

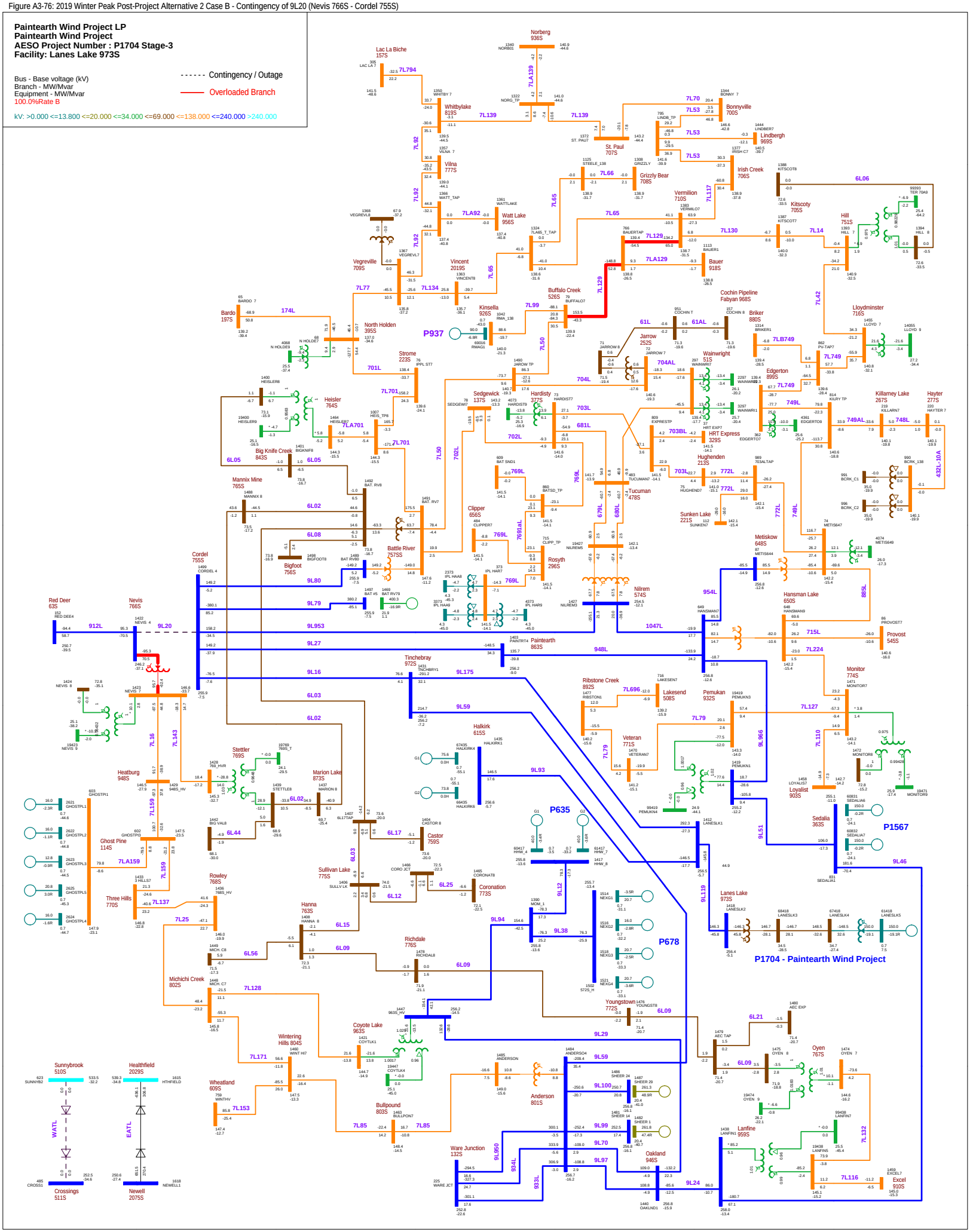

Figure A3-77: 2019 Winter Peak Post-Project Alternative 2 Case B - Contingency of 766S901T (Nevis 766S Transformer 901T)

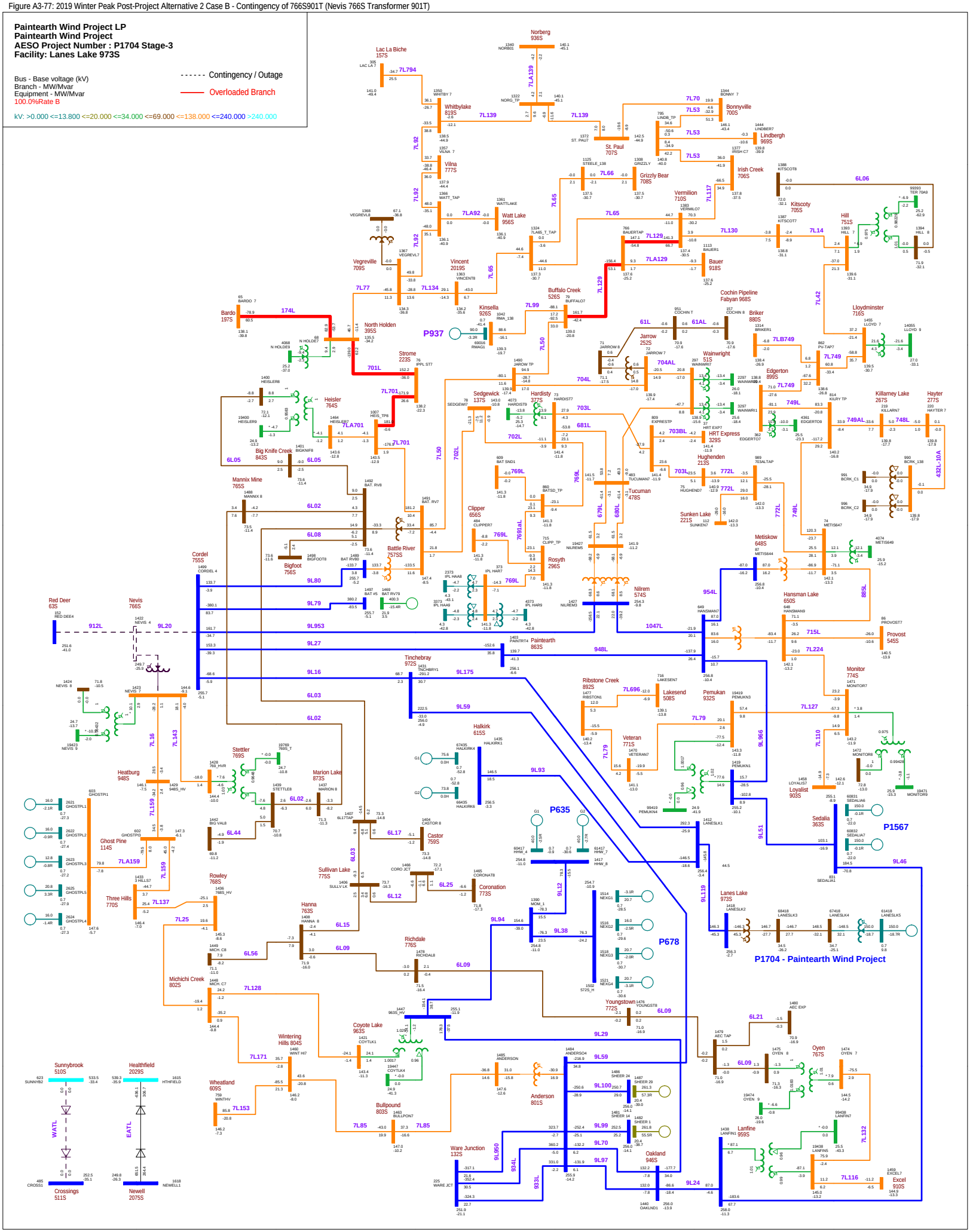

Figure A3-78: 2019 Winter Peak Post-Project Alternative 2 Case B - Contingency of 912L\9L912 (Red Deer 63S - Nevis 766S)

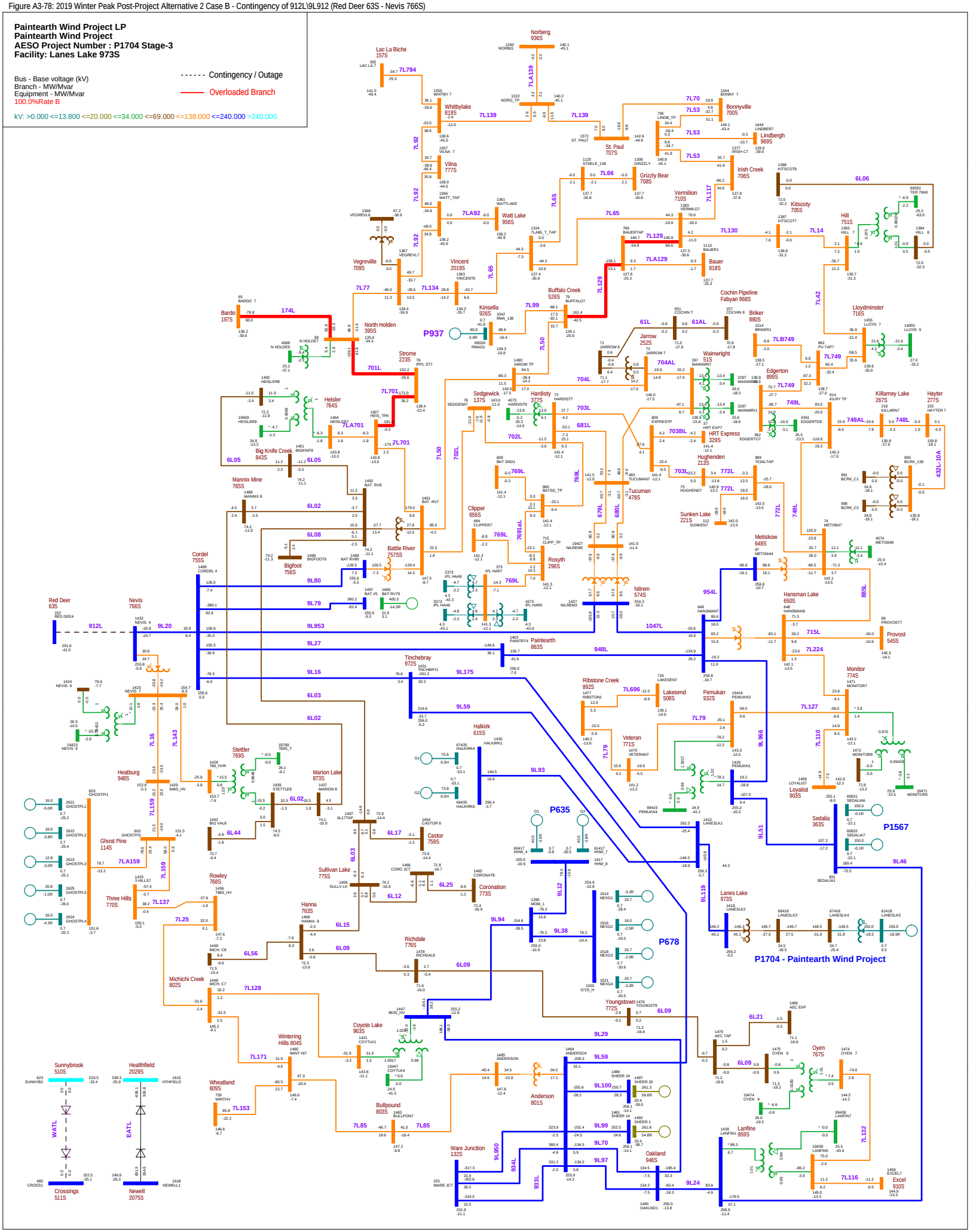

Figure A3-79: 2019 Winter Peak Post-Project Alternative 2 Case B - Contingency of 7L129\7LA129 (Buffalo Creek 526S - Vermilion 710S - Bauer 918S)

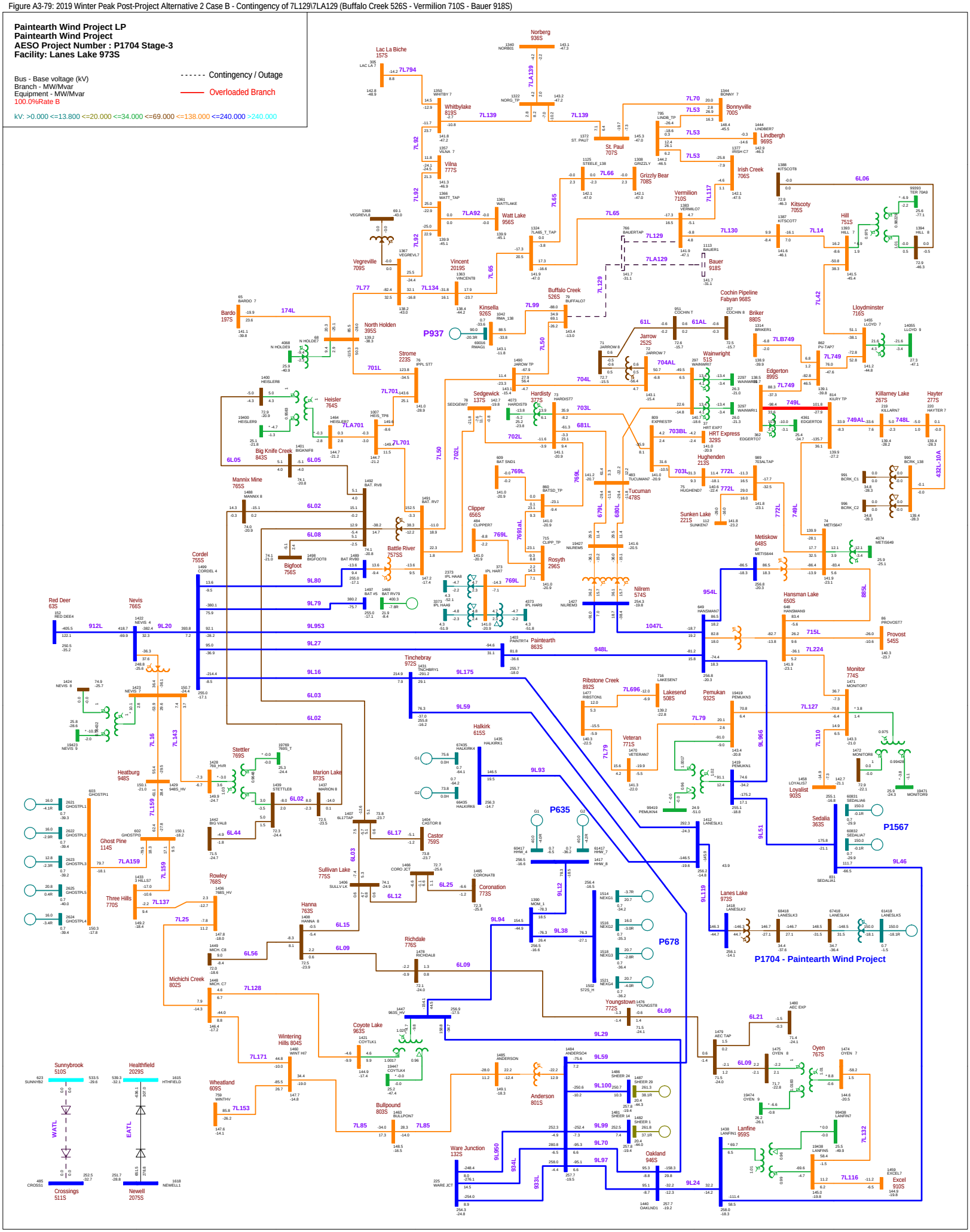

Figure A3-80: 2019 Winter Peak Post-Project Alternative 2 Case B - Contingency of 395ST1 (North Holden 395S Transformer T1)

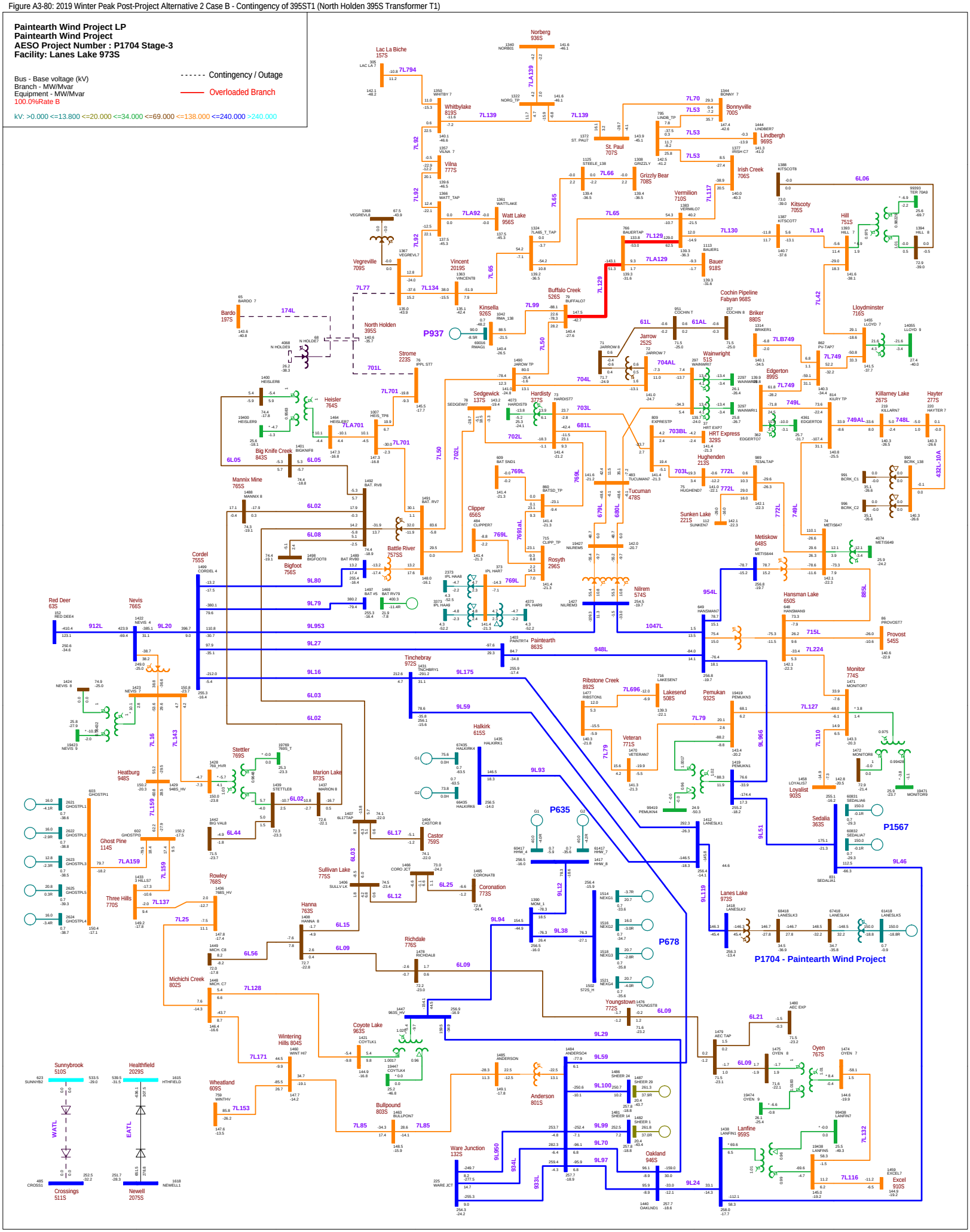

Figure A3-81: 2019 Winter Peak Post-Project Alternative 2 Case B - Contingency of 7L701\7LA701\701L (Battle River 757S - Heisler 764S - Strome 223S)

Paintearth Wind Project LP
Paintearth Wind Project
AESO Project Number : P1704 Stage-3
Facility: Lanes Lake 973S

Bus - Base voltage (kV)
Branch - MW/Mvar
Equipment - MW/Mvar
100.0%Rate B

Contingency / Outage
Overloaded Branch

kV: >0.000 <=13.800 <=20.000 <=34.000 <=69.000 <=138.000 <=240.000 >240.000

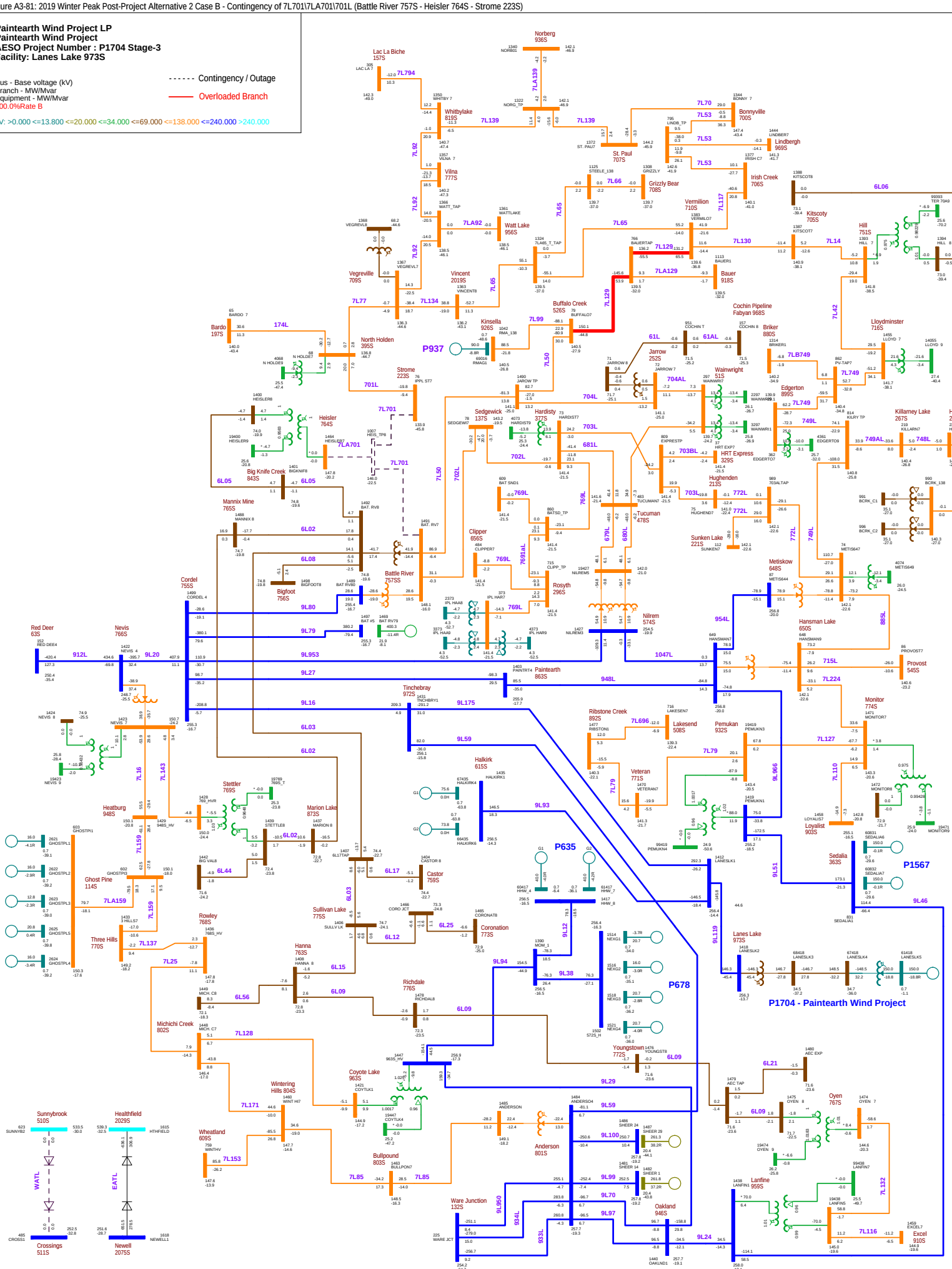

Figure A3-82: 2019 Winter Peak Post-Project Alternative 2 Case B - Contingency of 7L77 (North Holden 395S - Vegreville 709S)

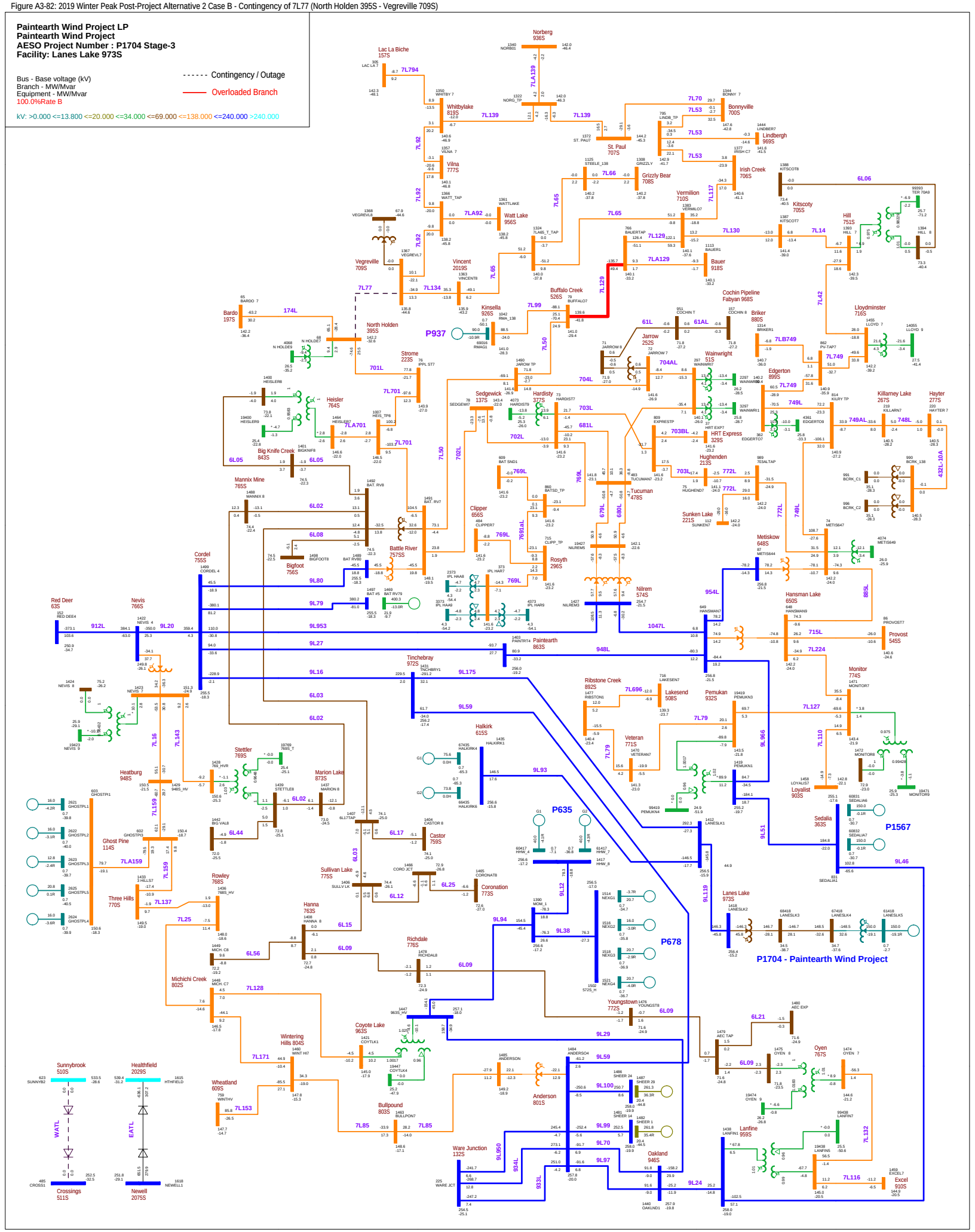

Figure A3-83: 2019 Winter Peak Post-Project Alternative 2 Case B - Contingency of 701L (North Holden 395S - Strome 223S)

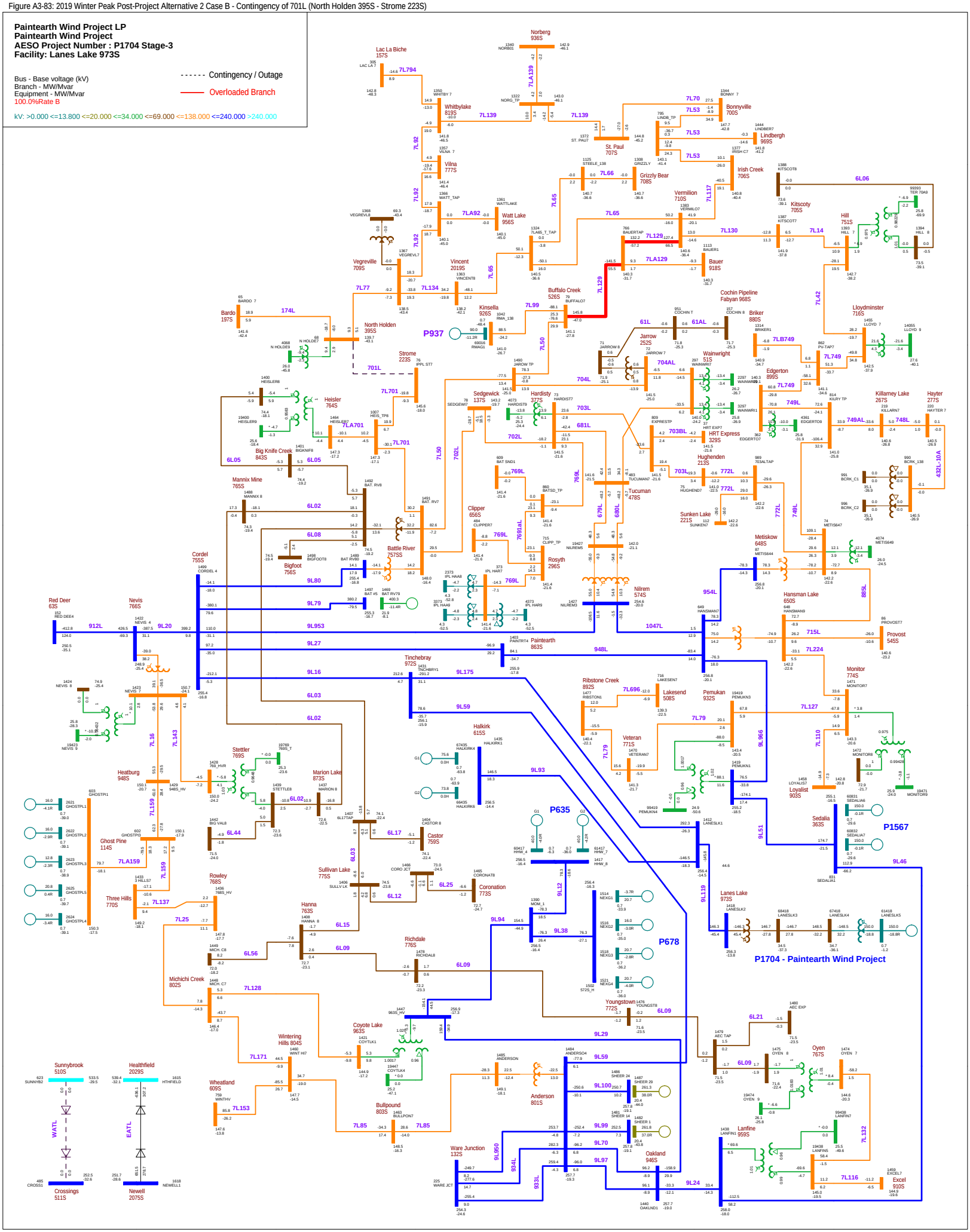

Figure A3-84: 2019 Winter Peak Post-Project Alternative 2 Case B - Contingency of 526ST1 or 526ST2 (Buffalo Creek 526S Transformer T1 or T2)

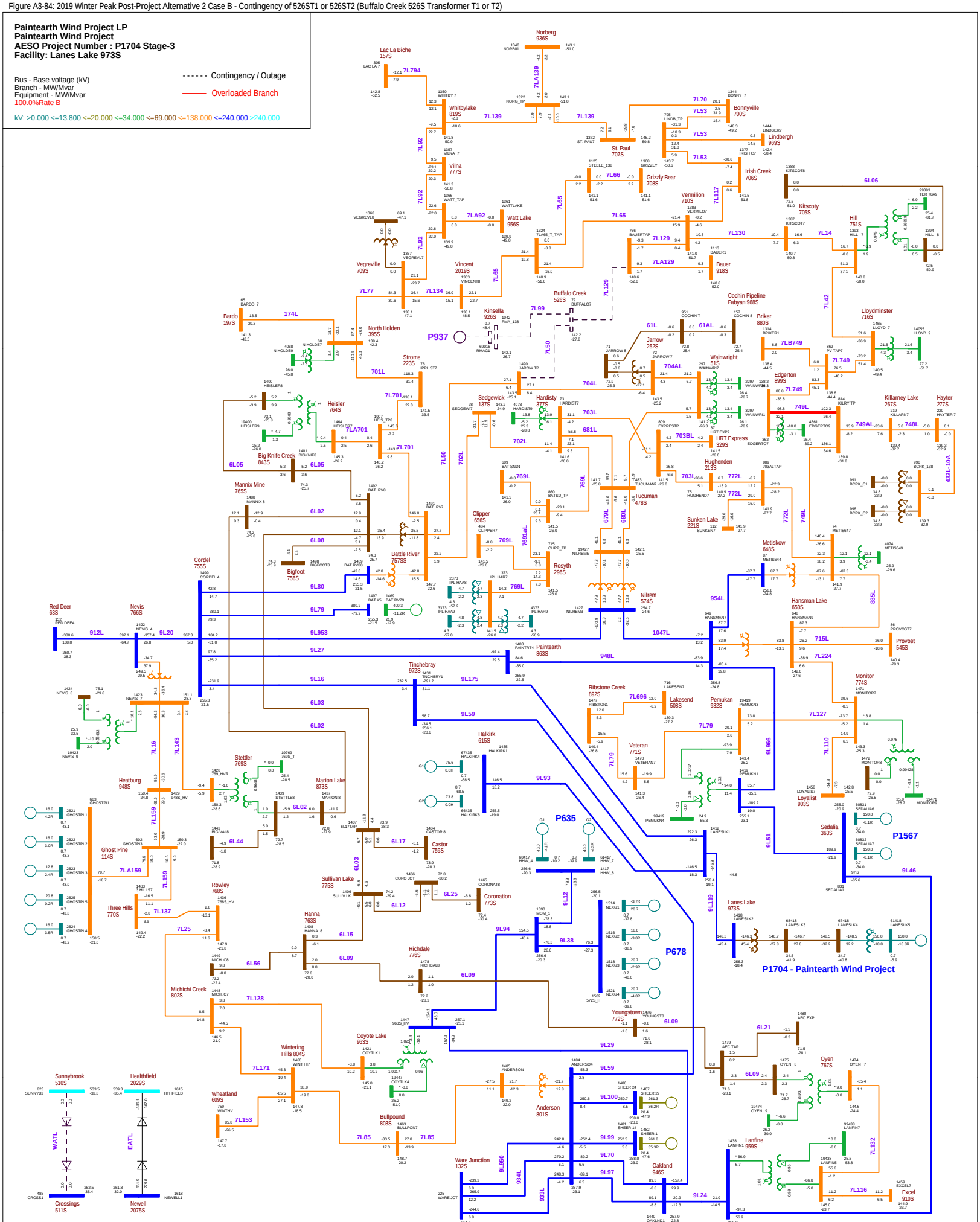
Paintearth Wind Project LP
Paintearth Wind Project
AESO Project Number : P1704 Stage-3
Facility: Lanes Lake 973S
Bus - Base voltage (kV)
Branch - MW/Mvar
Equipment - MW/Mvar
100.0%Rate B
kV: >0.000 <=13.800 <=20.000 <=34.000 <=69.000 <=138.000 <=240.000 >240.000
Contingency / Outage
Overloaded Branch
Norberg 936S
Lac La Biche 157S
Whitbylake 819S
Vilna 777S
Watt Lake 956S
Vegreville 709S
Vincent 2019S
Kinsella 926S
Buffalo Creek 526S
St. Paul 707S
Bonnyville 700S
Lindbergh 969S
Irish Creek 706S
Grizzly Bear 708S
Vermilion 710S
Kitscoty 705S
Hill 751S
Lloydminster 716S
Cochin Pipeline
Fabyan 968S
Briker 880S
Jarrow 252S
Wainwright 51S
Edgerton 899S
Killarney Lake 267S
Hayter 277S
HRT Express 329S
Hughenden 213S
Tucumar 478S
Sunken Lake 221S
Metiskow 648S
Hansman Lake 650S
Provost 545S
Monitor 774S
Lakesend 508S
Pemukan 932S
Veteran 771S
Loyalist 903S
Sedalia 363S
Lanes Lake 973S
Ribstone Creek 892S
Bardo 197S
North Holden 395S
Strome 223S
Heisler 764S
Big Knife Creek 843S
Mannix Mine 765S
Cordel 755S
Red Deer 63S
Nevis 766S
Bigfoot 756S
Battle River 757SS
Sedgewick 137S
Hardisty 377S
Clipper 656S
Rosyth 296S
Nilrem 574S
Paintearth 863S
Tinchebray 972S
Halkirk 615S
Stettler 769S
Heatburg 948S
Marion Lake 873S
Castor 759S
Ghost Pine 114S
Three Hills 770S
Rowley 768S
Sullivan Lake 775S
Hanna 763S
Coronation 773S
Richdale 776S
Michichi Creek 802S
Youngstown 772S
Oyen 767S
Anderson 801S
Oakland 946S
Ware Junction 132S
Lanfine 959S
Excel 910S
Sunnybrook 510S
Healthfield 2029S
Crossings 511S
Newell 2075S
Wheatland 609S
Wintering Hills 804S
Coyote Lake 963S
Bullpound 803S
Wainwright 51S
Jarrow 252S
Bauer 918S
Grizzly Bear 708S
Cochin 8
Cochin T
Lloydminster 716S
Killarney Lake 267S
Hayter 277S
Edgerton 899S
Hughenden 213S
Sunken Lake 221S
Metiskow 648S
Hansman Lake 650S
Provost 545S
Monitor 774S
Lakesend 508S
Pemukan 932S
Veteran 771S
Loyalist 903S
Sedalia 363S
Lanes Lake 973S
Ribstone Creek 892S
Oyen 767S
Lanfine 959S
Excel 910S
Youngstown 772S
Oakland 946S
Ware Junction 132S
Anderson 801S
Coyote Lake 963S
Bullpound 803S
Wheatland 609S
Wintering Hills 804S
Sunnybrook 510S
Healthfield 2029S
Crossings 511S
Newell 2075S
P937
P635
P678
P1567
P1704 - Paintearth Wind Project
174L
7L794
7L139
7L92
7L65
7L66
7L70
7L53
7L117
7L130
7L14
6L06
7L129
7LA129
7L77
7L134
7L99
7L50
7L42
61L
61AL
7LB749
7L749
704AL
703L
681L
702L
703AL
749L
749AL
748L
432L-10A
769L
769AL
772L
679L
680L
7L701
7LA701
6L05
6L02
6L08
6L80
9L79
9L20
912L
9L953
9L27
9L16
6L03
9L59
9L175
948L
1047L
954L
885L
715L
7L224
7L127
7L79
9L966
7L110
9L51
9L46
9L119
9L94
9L38
9L12
6L12
6L15
6L09
6L56
6L44
6L17
6L25
7L25
7L128
7L171
7L153
7L85
7L159
7LA159
7L16
7L143
7L137
9L93
9L100
9L99
9L70
9L97
9L24
9L29
6L21
7L132
7L116
934L
933L
950L
7LA92
7LA139
7LA1701
7LA701
7LA92
7L92
7L93
7L65
7L66
7L129
7L130
7L14
7L42
7L99
7L50
7L701
7L702
7L703
7L704
7L749
7L748
7L749A
7L772
7L696
7L79
7L127
7L110
7L224
7L715
7L954
7L885
7L948
7L1047
7L9966
7L9953
7L9175
7L9959
7L9927
7L9980
7L9943
7L9969
7L9951
7L9946
7L9119
7L9094
7L9038
7L9012
7L9006
7L9015
7L9100
7L9099
7L9070
7L9097
7L9024
7L9085
7L9029
7L9009
7L9059
7L9029
7L9085
7L9024
7L9097
7L9070
7L9099
7L9100
7L9059
7L9038
7L9094
7L9119
7L9046
7L9012
7L9006
7L9015
7L9966
7L9951
7L9946
7L9927
7L9980
7L9943
7L9969
7L9953
7L9175
7L9959
7L9948
7L9079

Figure A3-85: 2019 Winter Peak Post-Project Alternative 2 Case B - Contingency of 7L42 (Hill 751S - Lloydminster 716S)

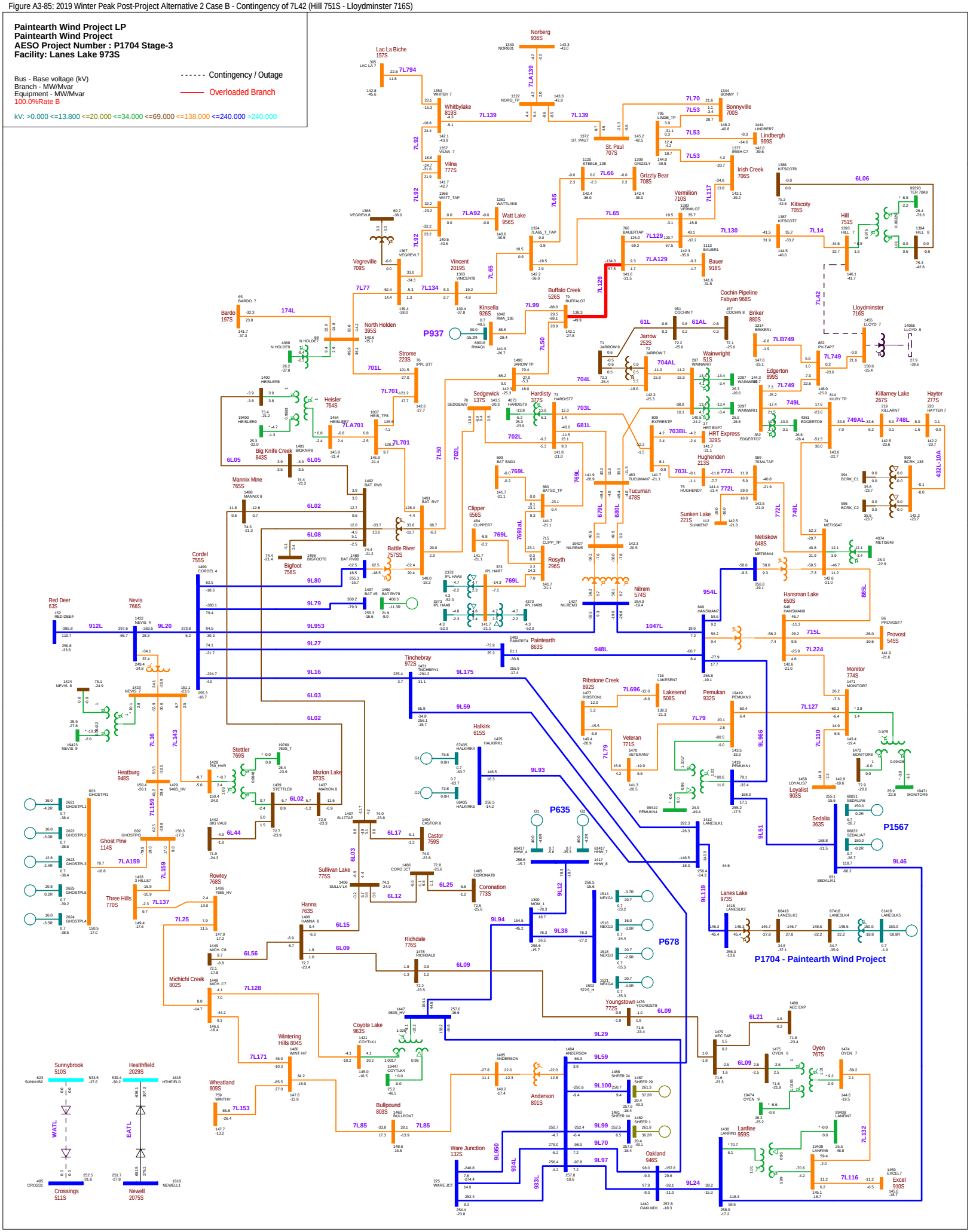

Figure A3-86: 2019 Winter Peak Post-Project Alternative 2 Case B - Contingency of 749L\749AL (Metiskow 648S - Edgerton 899S)

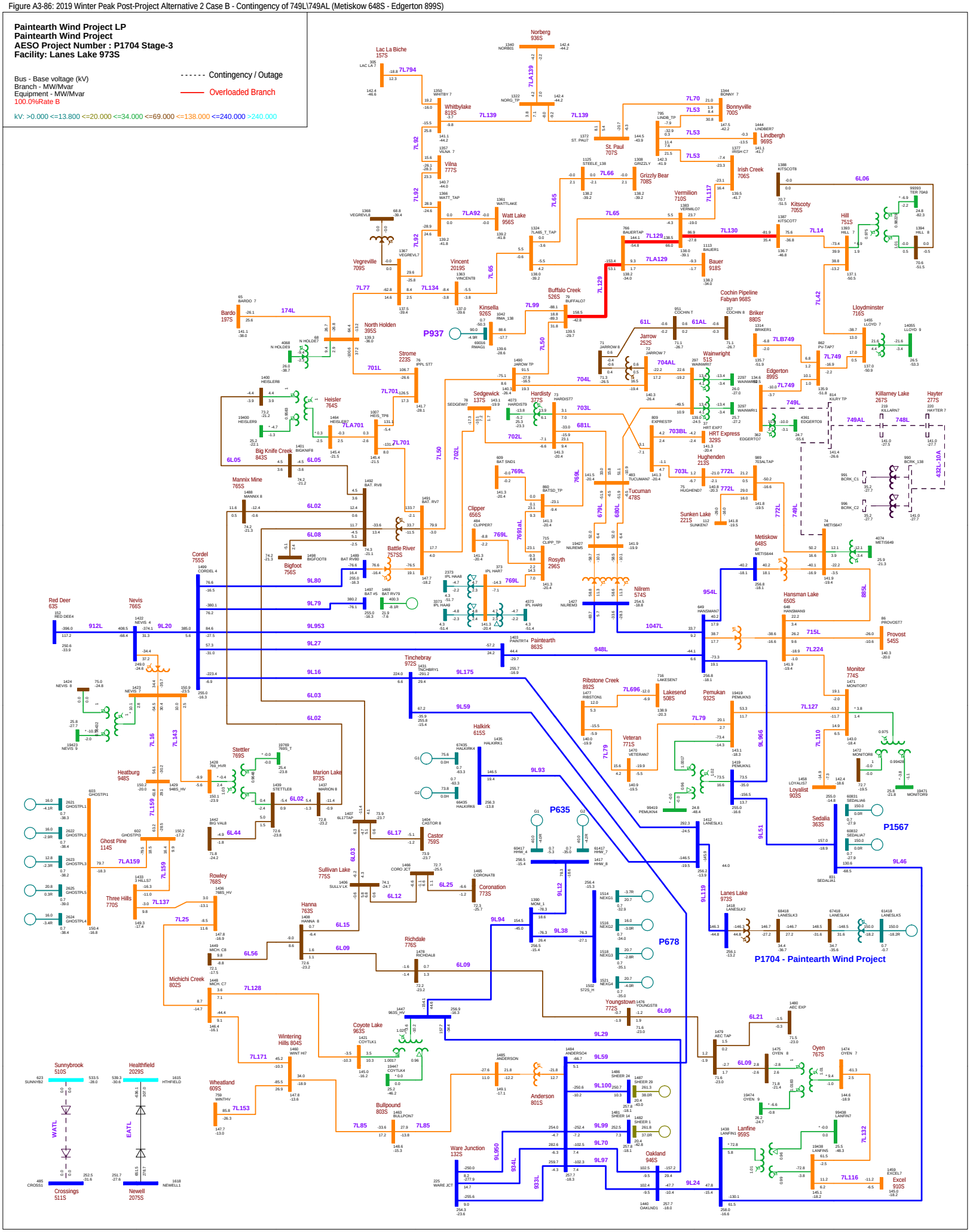

Figure A3-87: 2019 Winter Peak Post-Project Alternative 2 Case B - Contingency of 9L29 (Oakland 946S - Coyote Lake 963S)

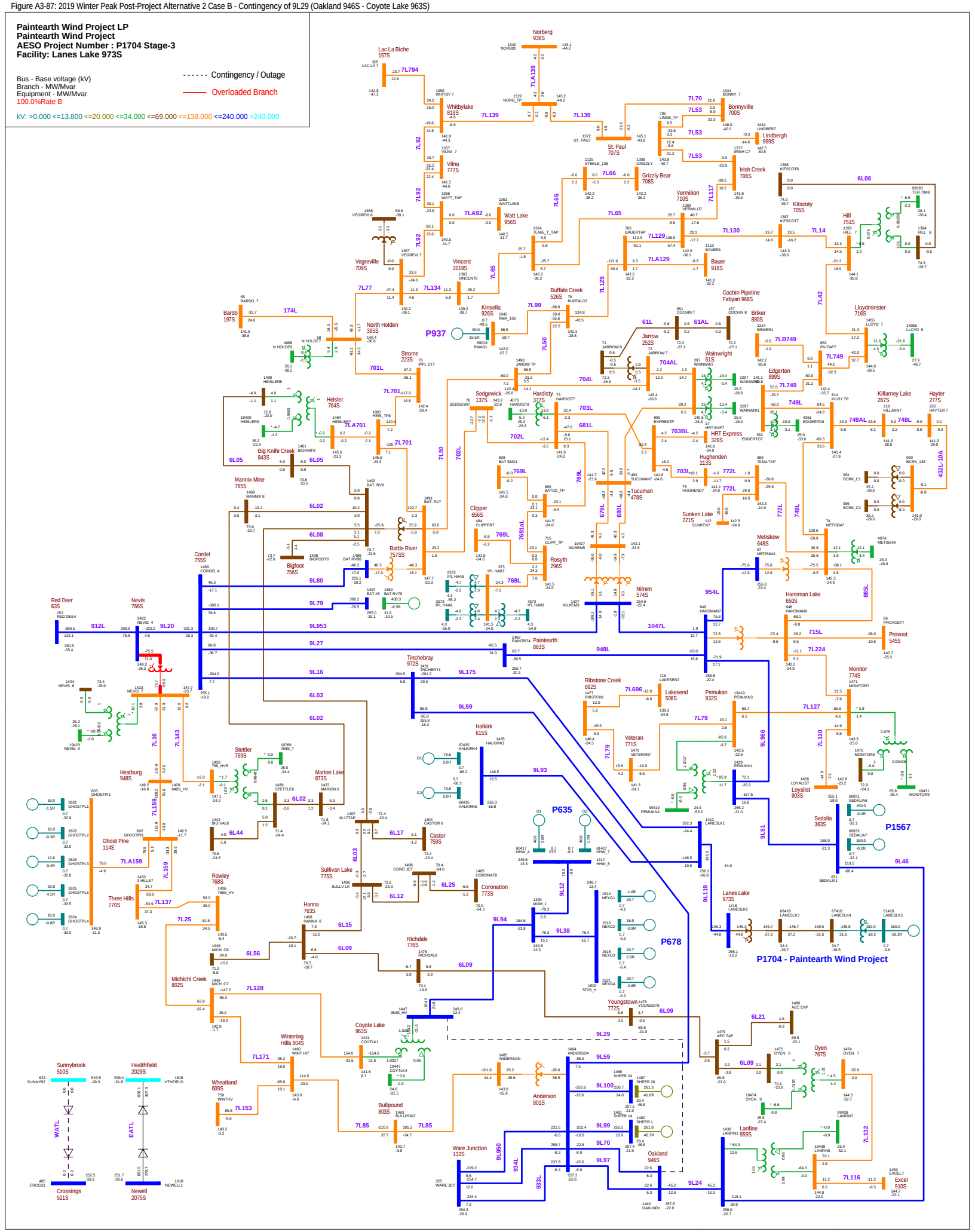

Attachment A4

Post-Project Transient Stability Diagrams

Table A4-1: Transient Stability Figures for Contingencies

Category	Contingency	Fault Location	Fault Clearing Time		2019 SL		2019 SP		2019 WP	
			Near End Cycle	Far End Cycle	Case A	Case B	Case A	Case B	Case A	Case B
Category B	9L24 (Oakland 946S - Lanfine 959S)	Oakland 946S	5	6	A4-1	A4-15	A4-29	A4-43	A4-57	A4-71
Category B	9L24 (Oakland 946S - Lanfine 959S)	Lanfine 959S	5	6	A4-2	A4-16	A4-30	A4-44	A4-58	A4-72
Category B	9L29 (Oakland 946S - Coyote Lake 963S)	Oakland 946S	5	6	A4-3	A4-17	A4-31	A4-45	A4-59	A4-73
Category B	9L29 (Oakland 946S - Coyote Lake 963S)	Coyote Lake 963S	5	6	A4-4	A4-18	A4-32	A4-46	A4-60	A4-74
Category B	9L20 (Cordel 755S - Nevis 766S)	Cordel 755S	5	6	A4-5	A4-19	A4-33	A4-47	A4-61	A4-75
Category B	9L20 (Cordel 755S - Nevis 766S)	Nevis 766S	5	6	A4-6	A4-20	A4-34	A4-48	A4-62	A4-76
Category B	9L16 (Tinchebray 972S - Cordel 755S)	Cordel 755S	5	6	A4-7	A4-21	A4-35	A4-49	A4-63	A4-77
Category B	9L16 (Tinchebray 972S - Cordel 755S)	Tinchebray 972S	5	6	A4-8	A4-22	A4-36	A4-50	A4-64	A4-78
Category B	9L59 (Anderson 801S - Tinchebray 972S)	Anderson 801S	5	6	A4-9	A4-23	A4-37	A4-51	A4-65	A4-79
Category B	9L59 (Anderson 801S - Tinchebray 972S)	Tinchebray 972S	5	6	A4-10	A4-24	A4-38	A4-52	A4-66	A4-80
Category B	9L966 (Pemukan 932S - Hansman Lake 650S)	Pemukan 932S	5	6	A4-11	A4-25	A4-39	A4-53	A4-67	A4-81
Category B	9L966 (Pemukan 932S - Hansman Lake 650S)	Hansman Lake 650S	5	6	A4-12	A4-26	A4-40	A4-54	A4-68	A4-82
Category B	912L\9L912 (Nevis 766S - Red Deer 63S)	Nevis 766S	5.5	6.5	A4-13	A4-27	A4-41	A4-55	A4-69	A4-83
Category B	912L\9L912 (Nevis 766S - Red Deer 63S)	Red Deer 63S	5	6	A4-14	A4-28	A4-42	A4-56	A4-70	A4-84

Transient Stability Results

1. Stability Results 2019 Summer Light - Case A

Figure A4-1: 9L24 (Oakland 946S - Lanfine 959S): 3-phase fault at Oakland 946S

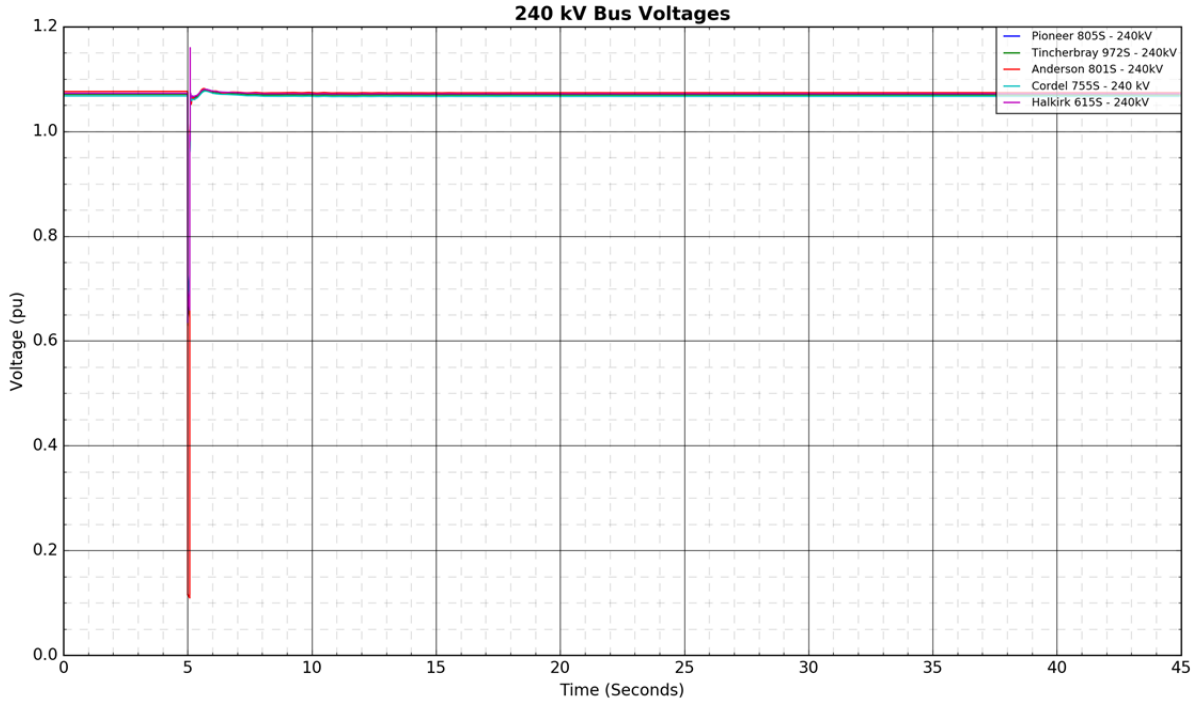

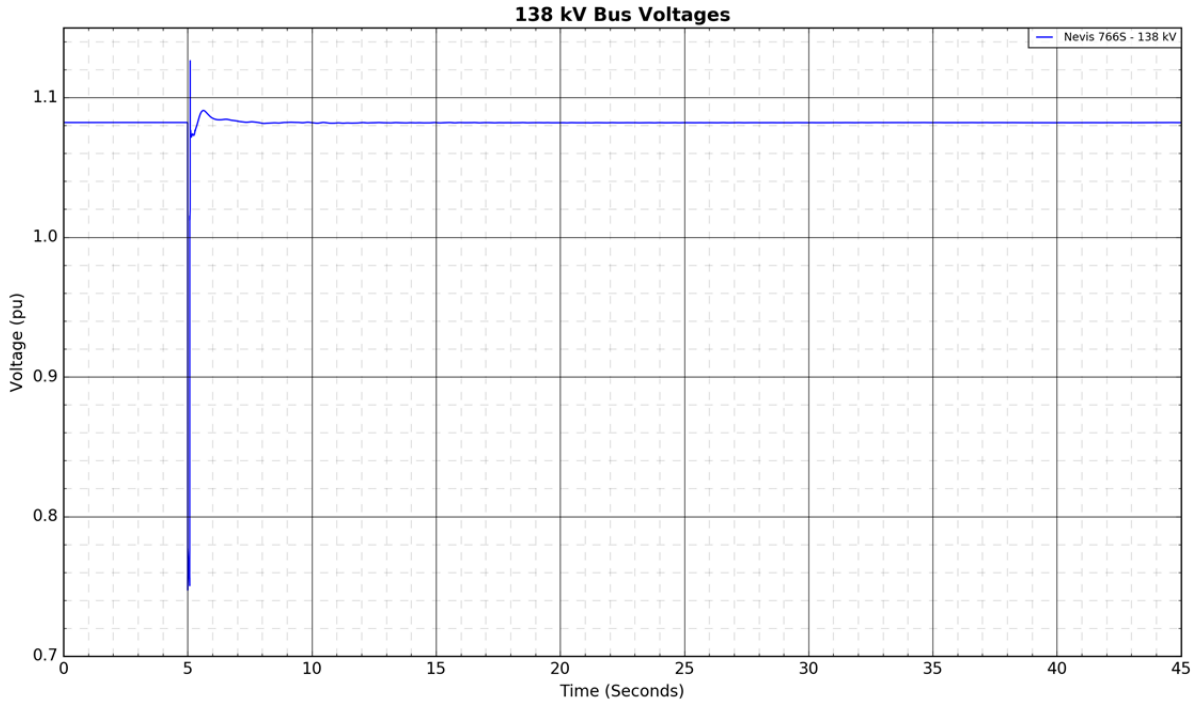

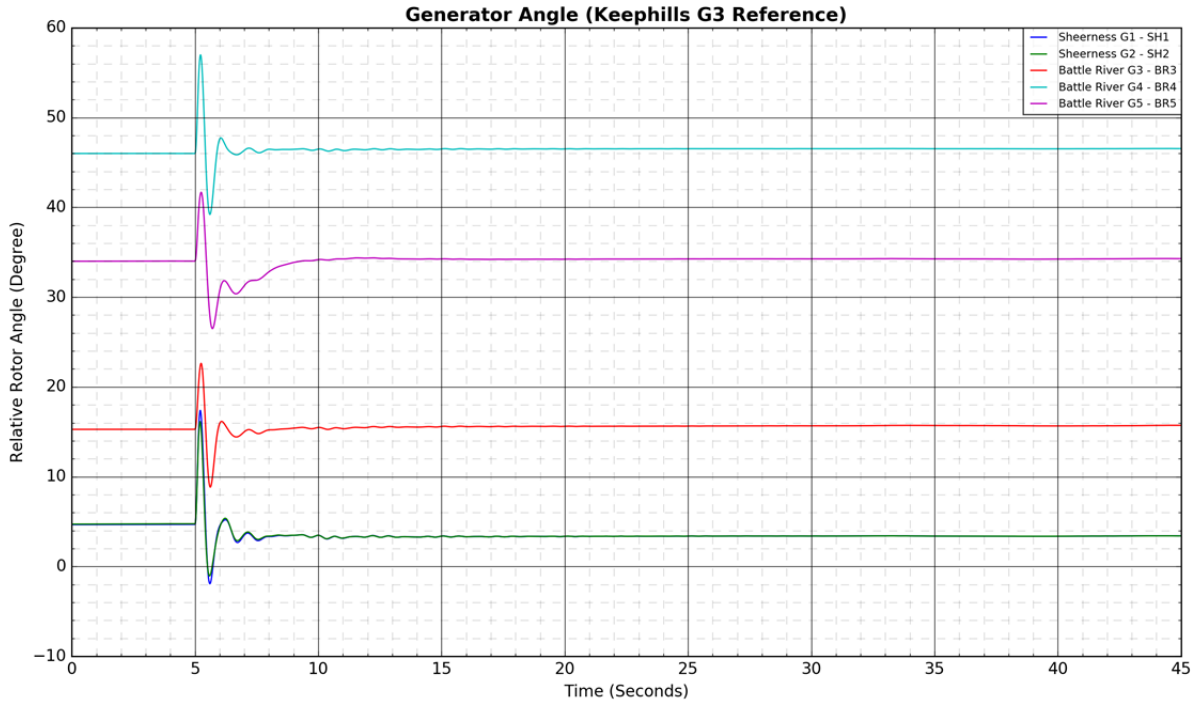
Generator Angle (Keephills G3 Reference)
Relative Rotor Angle (Degree)
Time (Seconds)
Sheerness G1 - SH1
Sheerness G2 - SH2
Battle River G3 - BR3
Battle River G4 - BR4
Battle River G5 - BR5

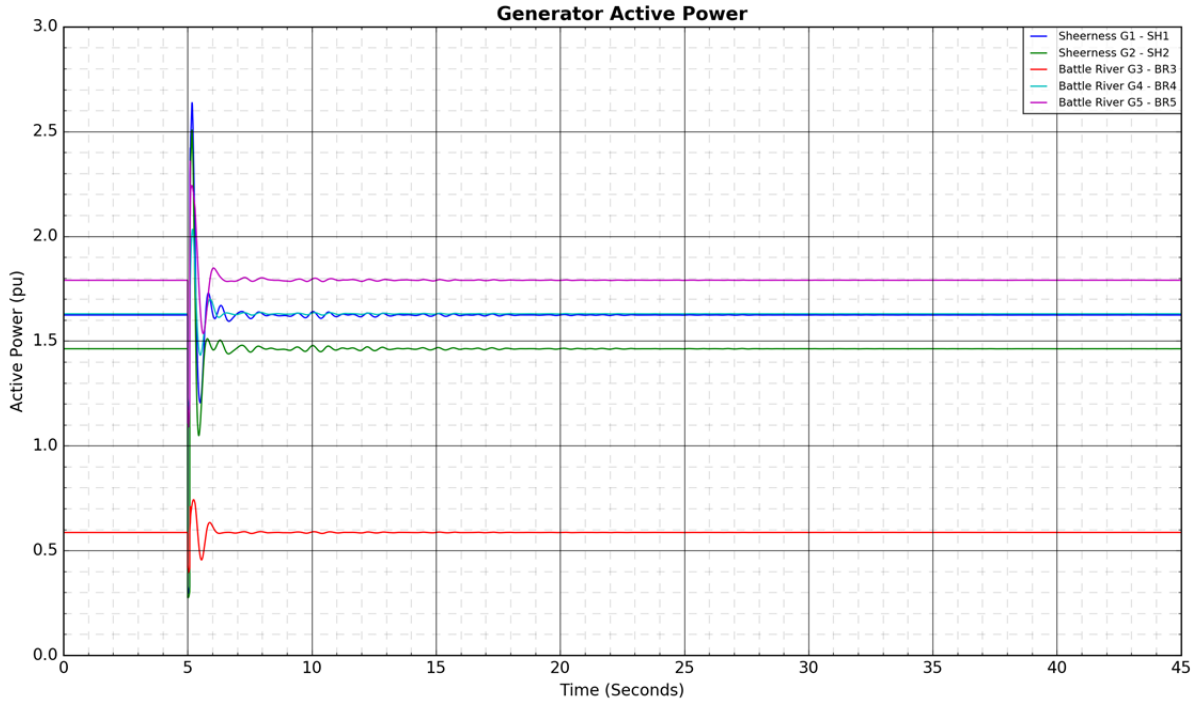
Generator Active Power
Active Power (pu)
Time (Seconds)
Sheerness G1 - SH1
Sheerness G2 - SH2
Battle River G3 - BR3
Battle River G4 - BR4
Battle River G5 - BR5

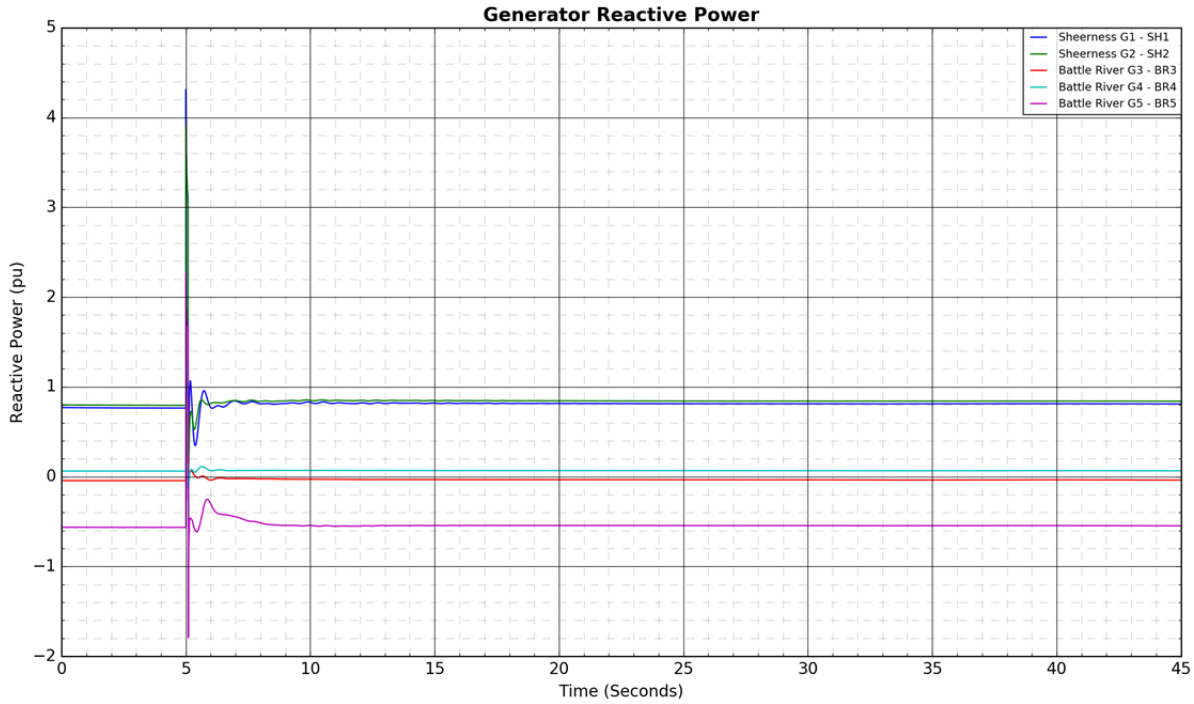
Generator Reactive Power
Sheerness G1 - SH1
Sheerness G2 - SH2
Battle River G3 - BR3
Battle River G4 - BR4
Battle River G5 - BR5
Reactive Power (pu)
Time (Seconds)

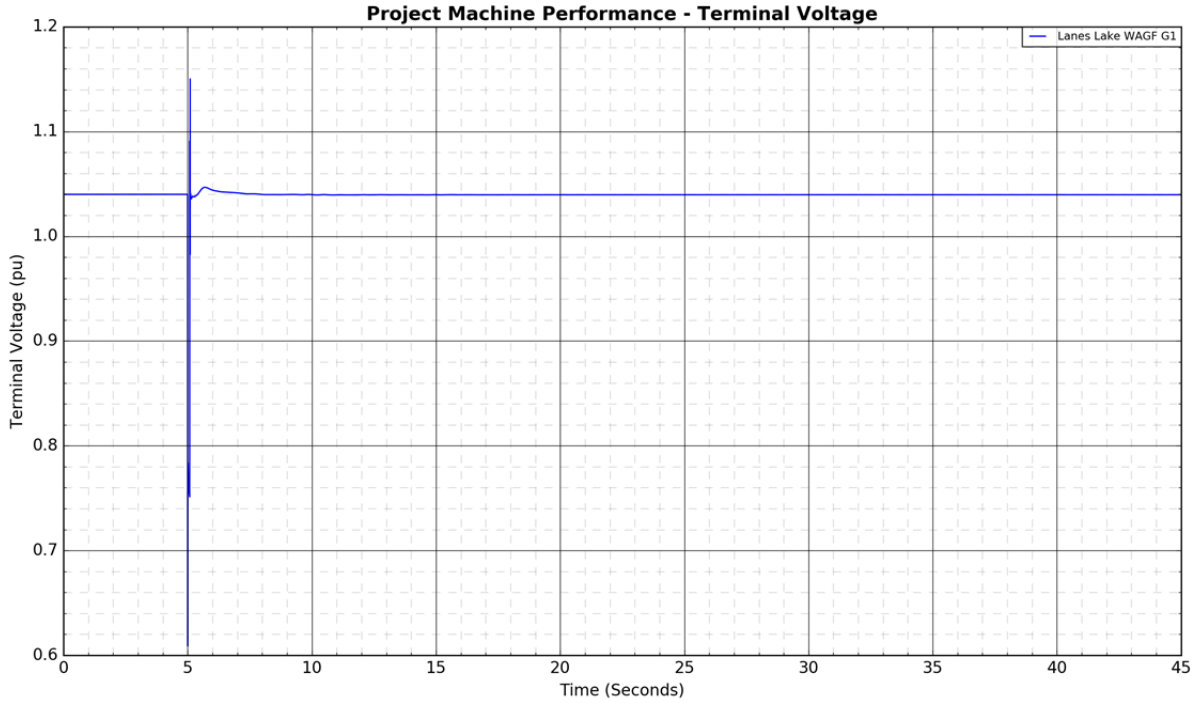
Project Machine Performance - Terminal Voltage
Lanes Lake WAGF G1
Terminal Voltage (pu)
Time (Seconds)


Project Machine Performance - Active Power
Lanes Lake WAGF G1
Active Power (pu)
Time (Seconds)
2.2
2.0
1.8
1.6
1.4
1.2
1.0
0.8
0
5
10
15
20
25
30
35
40
45

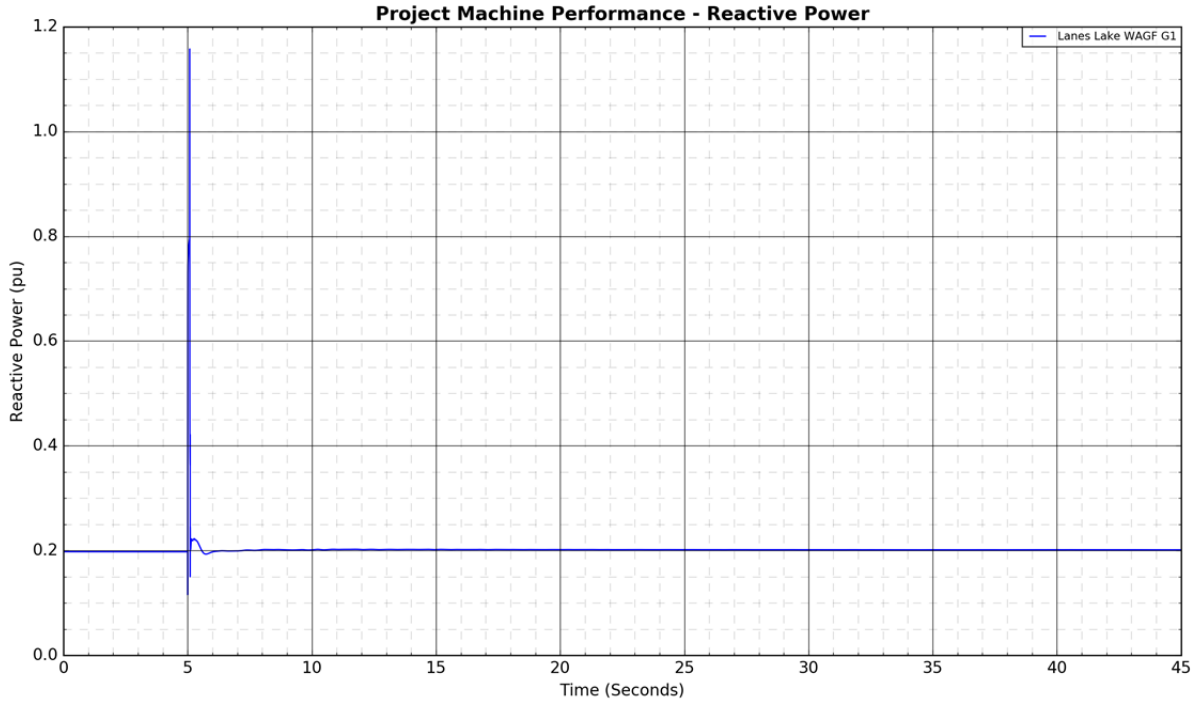
Project Machine Performance - Reactive Power
Lanes Lake WAGF G1
Reactive Power (pu)
Time (Seconds)
1.2
1.0
0.8
0.6
0.4
0.2
0.0
0
5
10
15
20
25
30
35
40
45


Branch Active Power Flows
9L93 (Pioneer 805S - Halkirk 615S)
9L175 (Pioneer 805S - Tincherbray 972S)
9L16 (Tincherbray 972S - Cordel 755S)
9L59 (Anderson 801S - Tinchebray 972S)
Active Power (MW)
Time (Seconds)

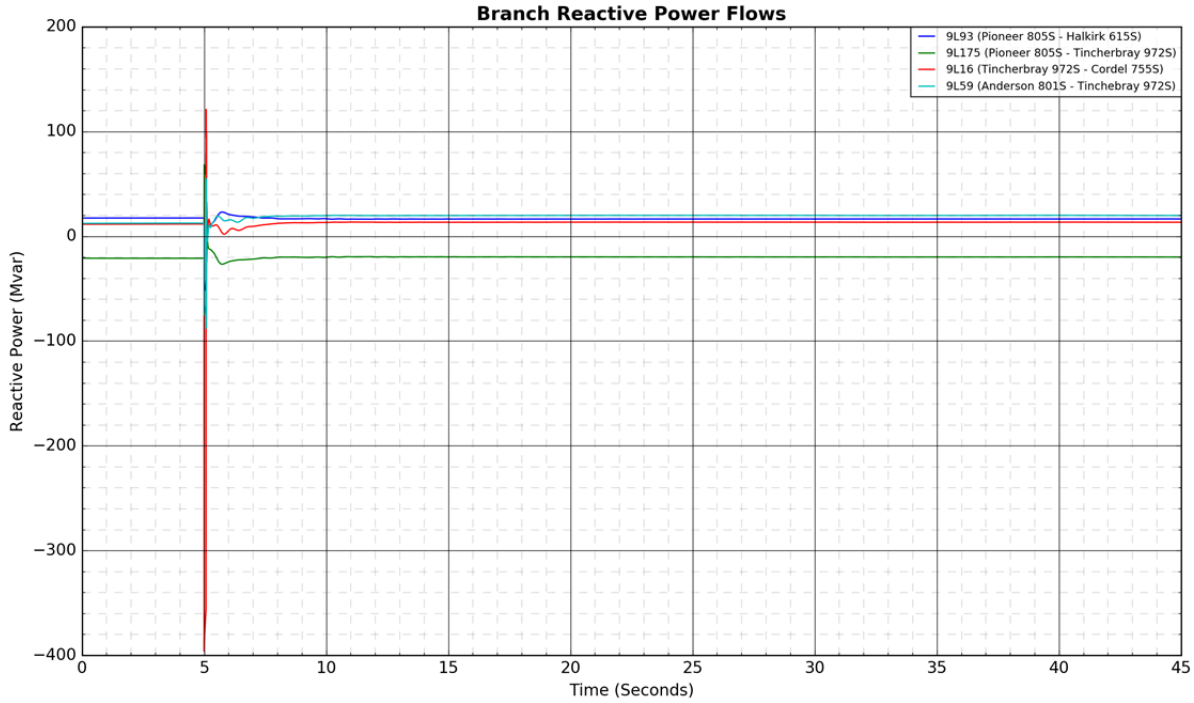
Branch Reactive Power Flows
9L93 (Pioneer 805S - Halkirk 615S)
9L175 (Pioneer 805S - Tincherbray 972S)
9L16 (Tincherbray 972S - Cordel 755S)
9L59 (Anderson 801S - Tinchebray 972S)
Reactive Power (Mvar)
Time (Seconds)

Figure A4-2: 9L24 (Oakland 946S - Lanfine 959S): 3-phase fault at Lanfine 959S

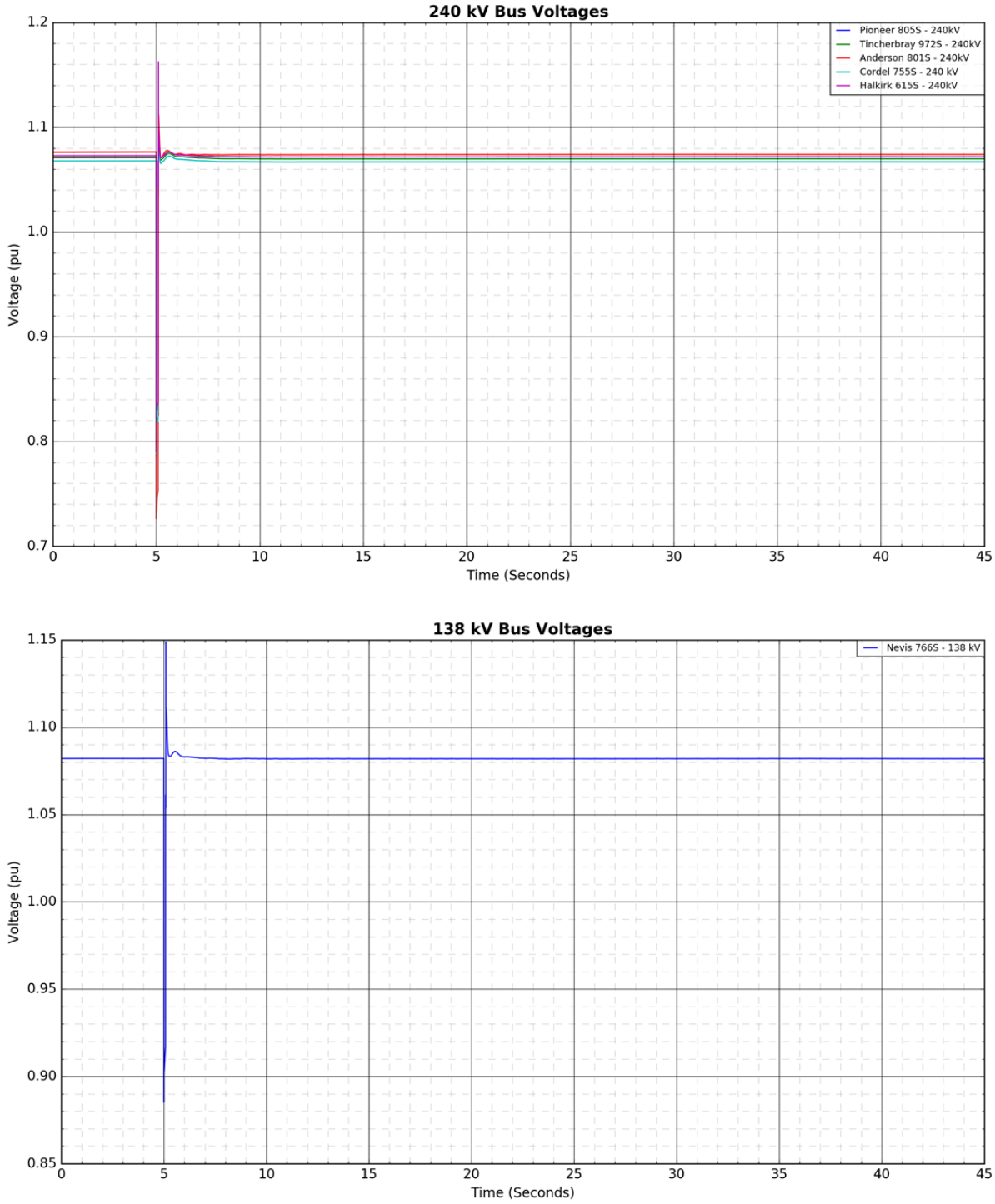

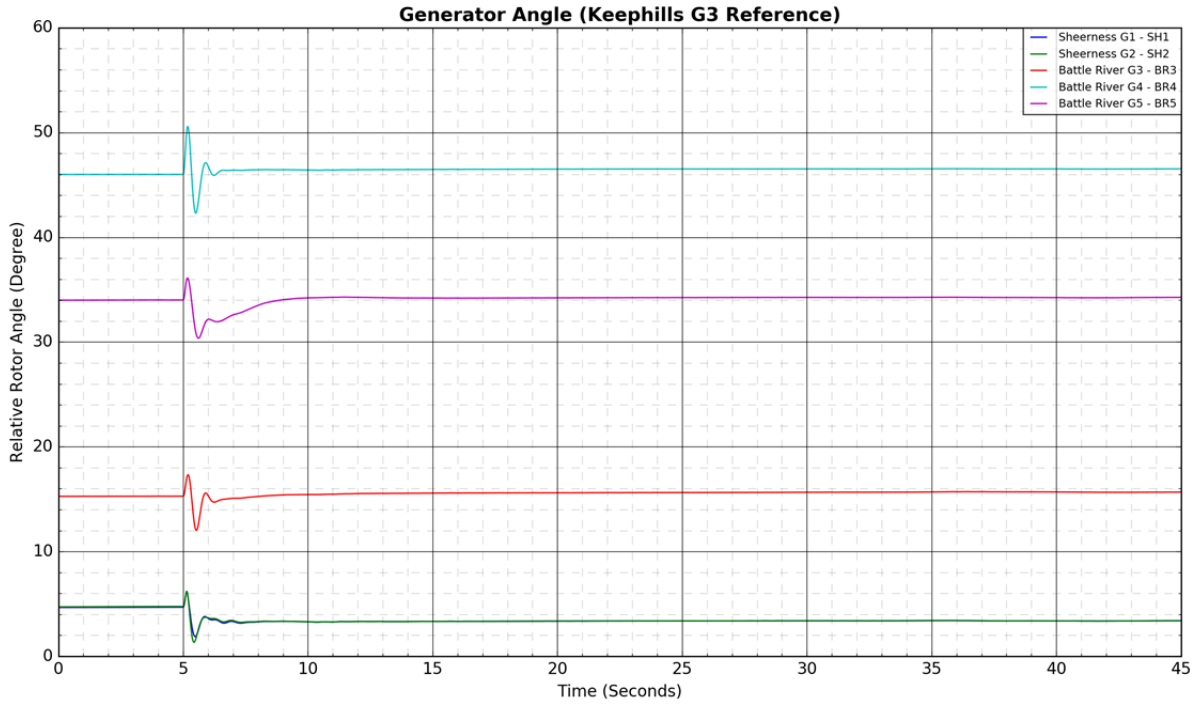
Generator Angle (Keephills G3 Reference)
Relative Rotor Angle (Degree)
Time (Seconds)
Sheerness G1 - SH1
Sheerness G2 - SH2
Battle River G3 - BR3
Battle River G4 - BR4
Battle River G5 - BR5
0
10
20
30
40
50
60
0
5
10
15
20
25
30
35
40
45

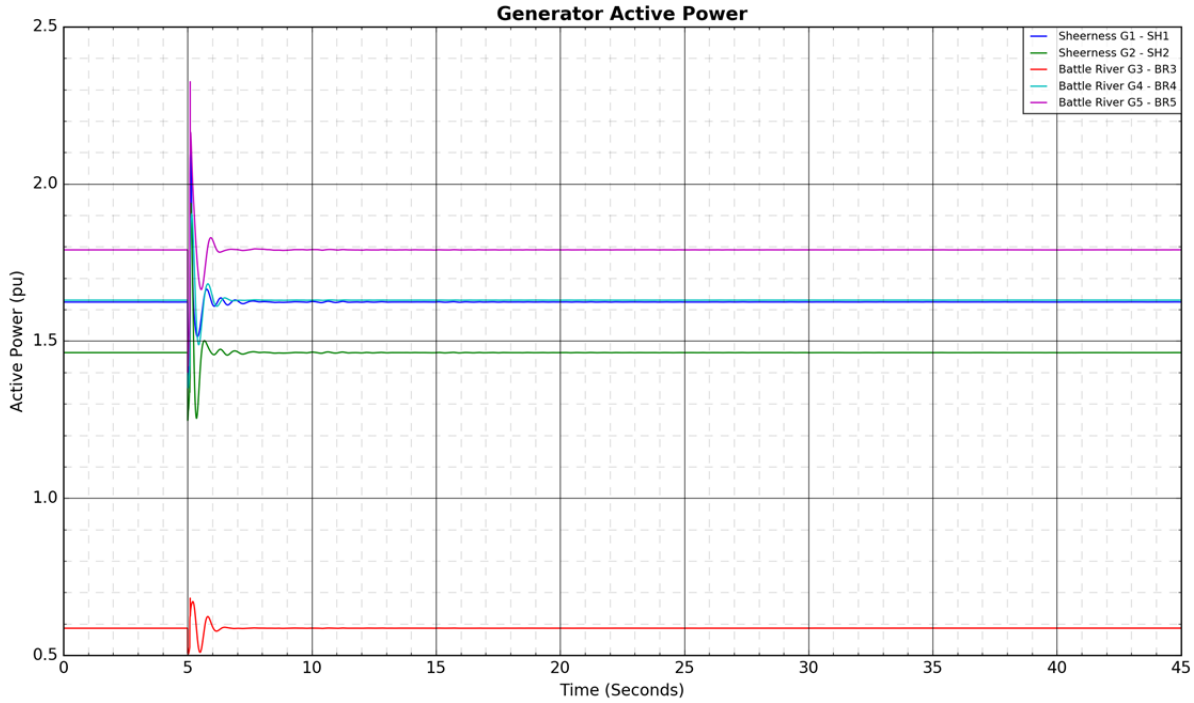
Generator Active Power
Active Power (pu)
Time (Seconds)
Sheerness G1 - SH1
Sheerness G2 - SH2
Battle River G3 - BR3
Battle River G4 - BR4
Battle River G5 - BR5
0.5
1.0
1.5
2.0
2.5
0
5
10
15
20
25
30
35
40
45

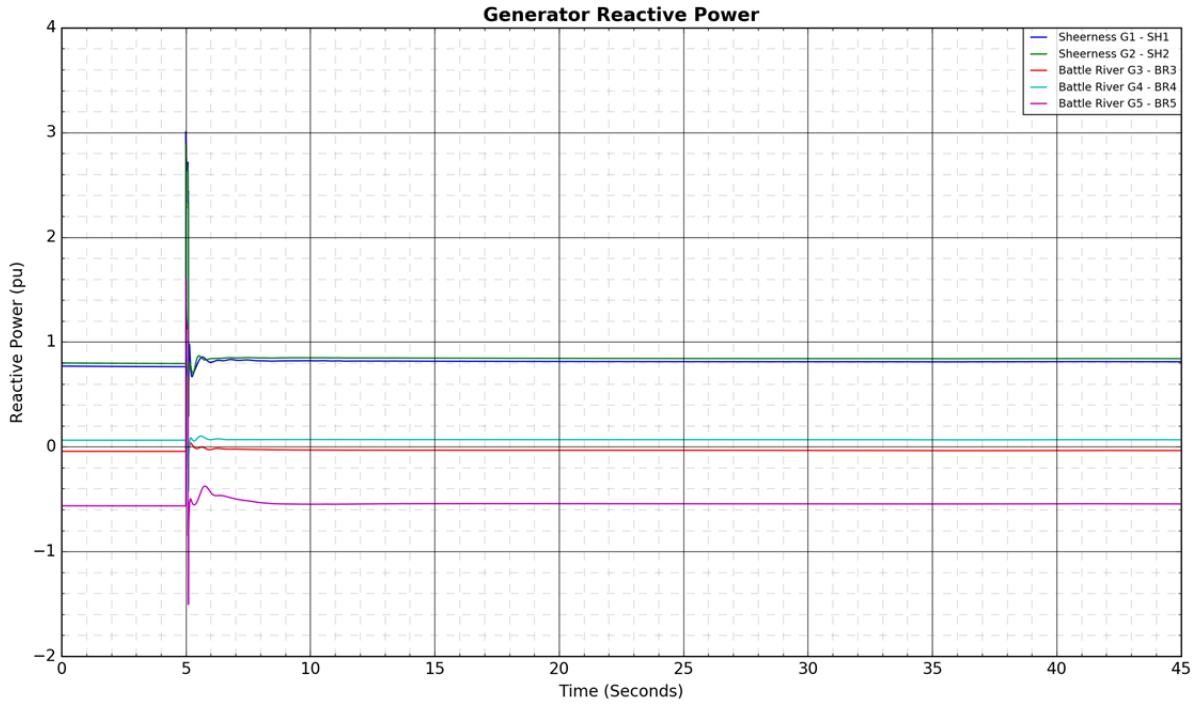
Generator Reactive Power
Sheerness G1 - SH1
Sheerness G2 - SH2
Battle River G3 - BR3
Battle River G4 - BR4
Battle River G5 - BR5
Reactive Power (pu)
Time (Seconds)

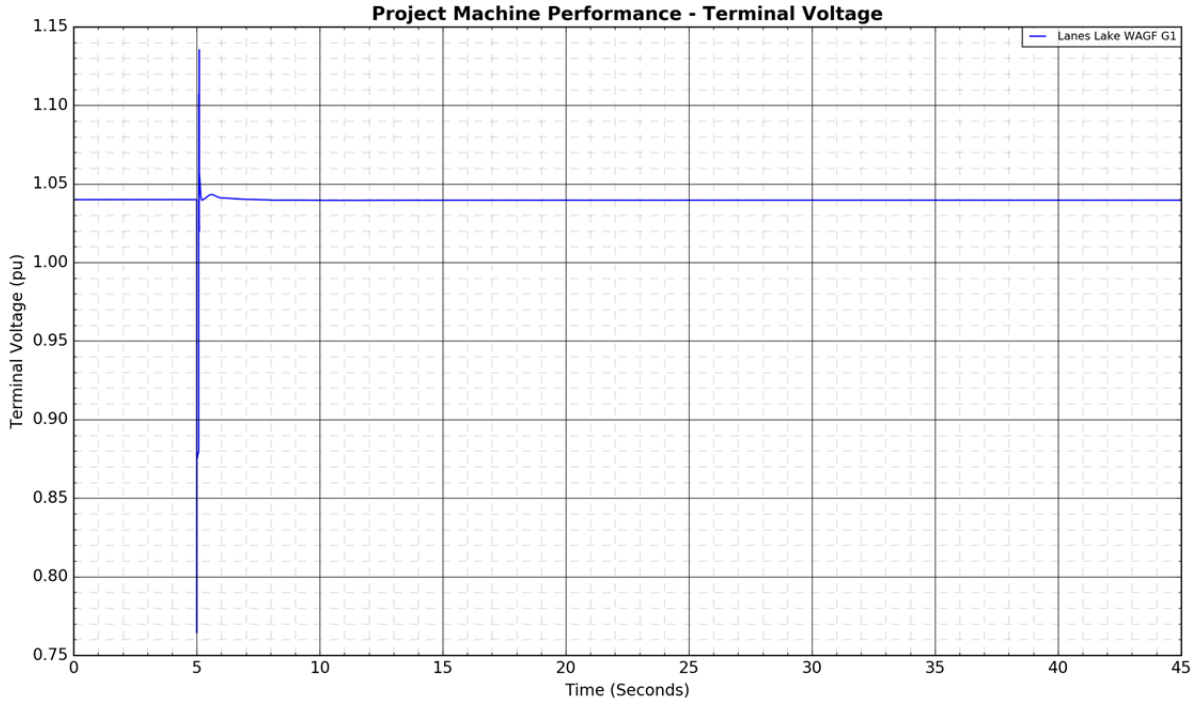
Project Machine Performance - Terminal Voltage
Lanes Lake WAGF G1
Terminal Voltage (pu)
Time (Seconds)


Project Machine Performance - Active Power
Lanes Lake WAGF G1
Active Power (pu)
1.9
1.8
1.7
1.6
1.5
1.4
1.3
1.2
1.1
0
5
10
15
20
25
30
35
40
45
Time (Seconds)

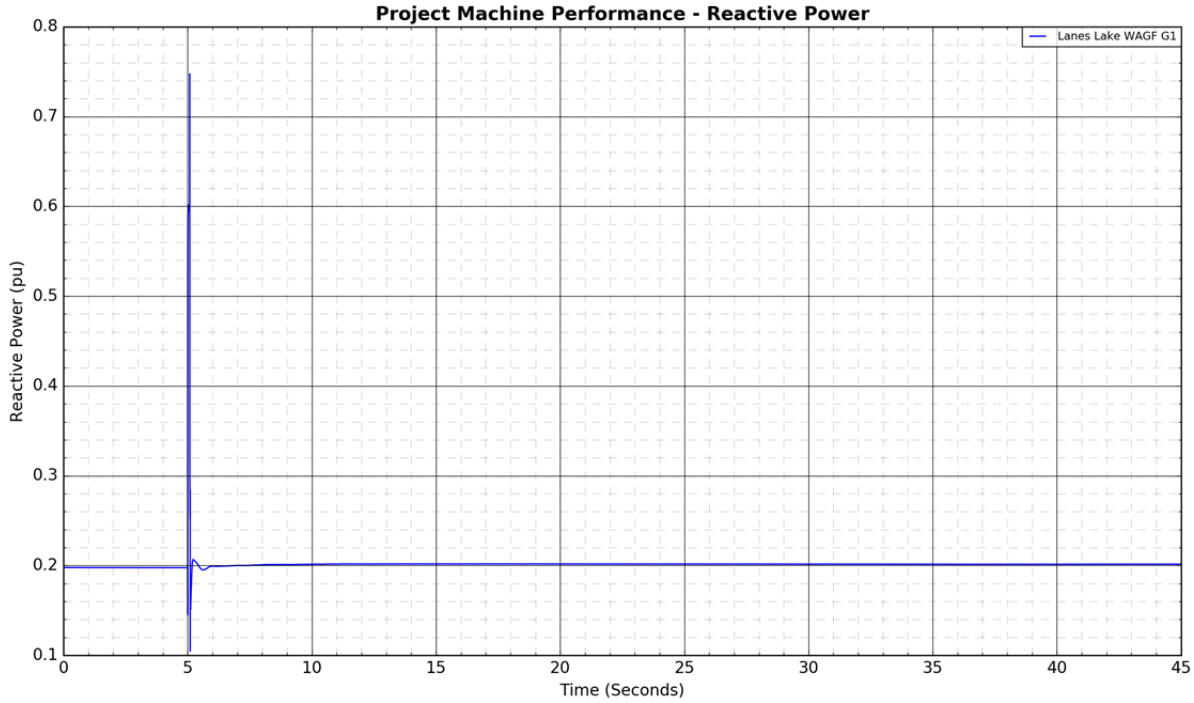
Project Machine Performance - Reactive Power
Lanes Lake WAGF G1
Reactive Power (pu)
0.8
0.7
0.6
0.5
0.4
0.3
0.2
0.1
0
5
10
15
20
25
30
35
40
45
Time (Seconds)


Branch Active Power Flows
9L93 (Pioneer 805S - Halkirk 615S)
9L175 (Pioneer 805S - Tincherbray 972S)
9L16 (Tincherbray 972S - Cordel 755S)
9L59 (Anderson 801S - Tinchebray 972S)
Active Power (MW)
Time (Seconds)

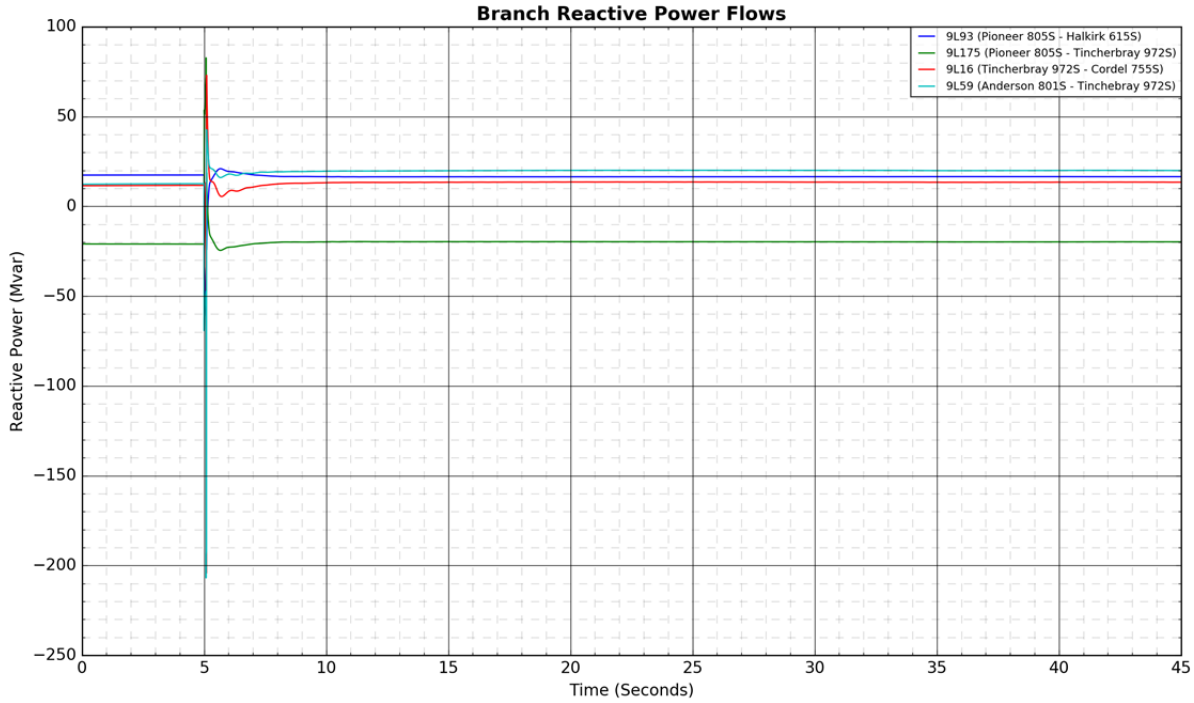
Branch Reactive Power Flows
9L93 (Pioneer 805S - Halkirk 615S)
9L175 (Pioneer 805S - Tincherbray 972S)
9L16 (Tincherbray 972S - Cordel 755S)
9L59 (Anderson 801S - Tinchebray 972S)
Reactive Power (Mvar)
Time (Seconds)

Figure A4-3: 9L29 (Oakland 946S - Coyote Lake 963S): 3-phase fault at Oakland 946S

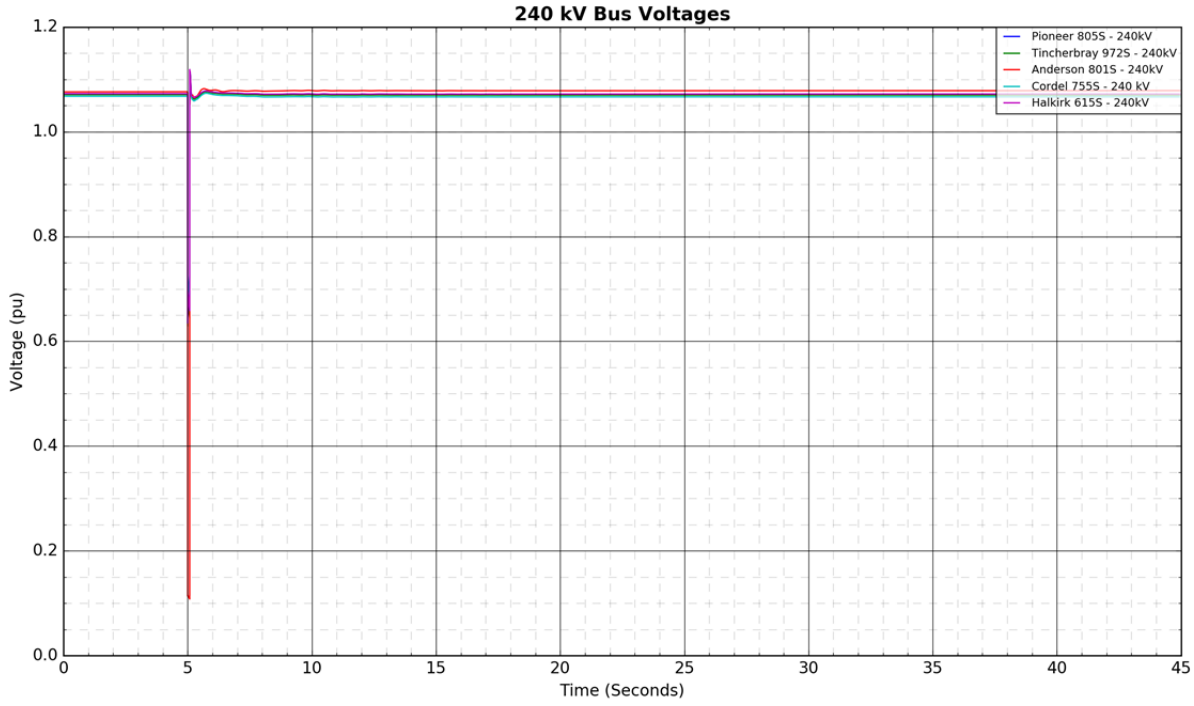

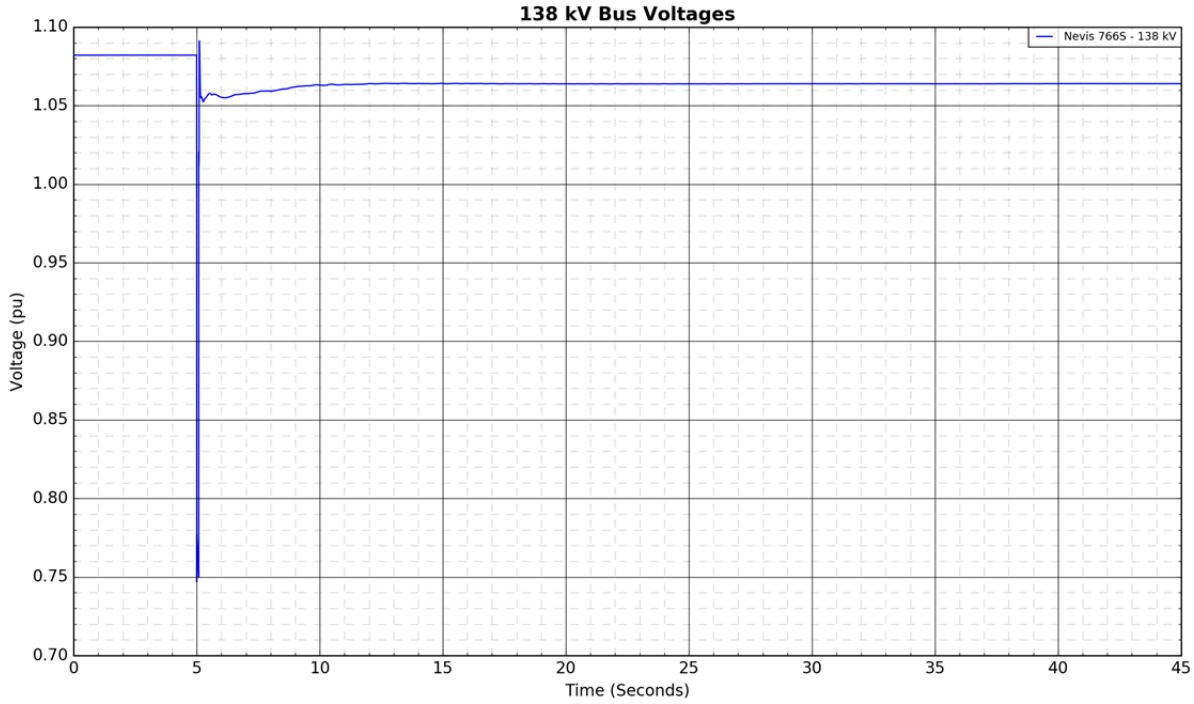

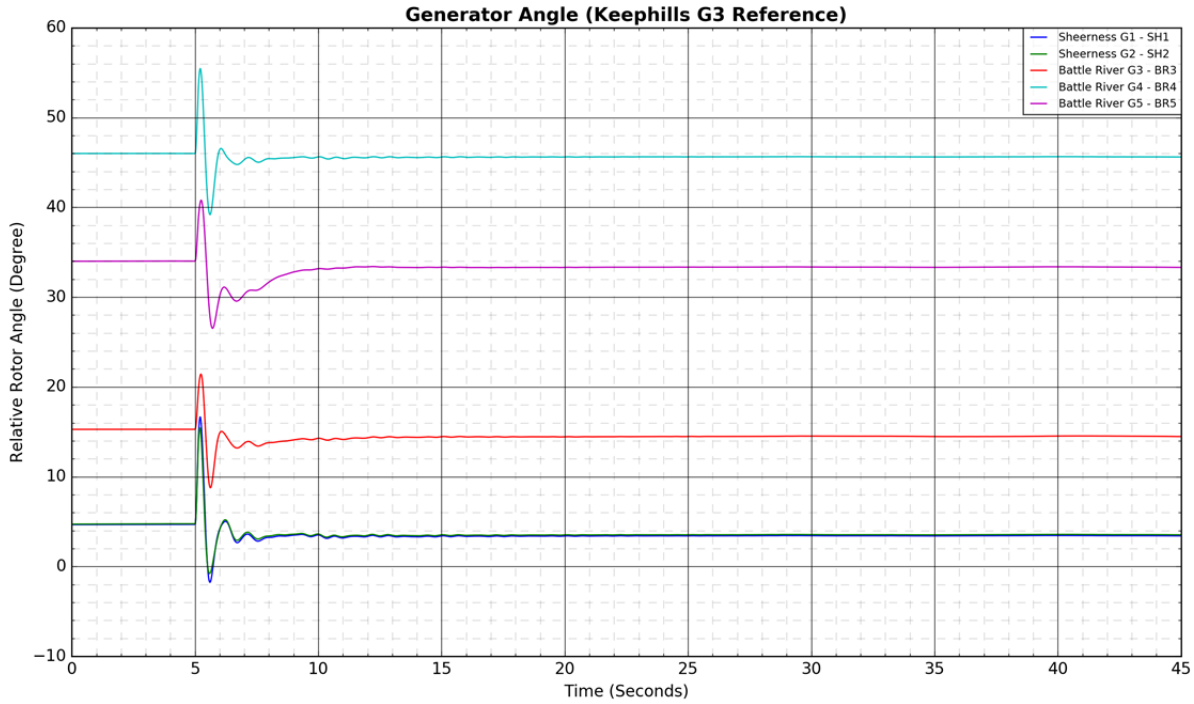
Generator Angle (Keephills G3 Reference)
Relative Rotor Angle (Degree)
Time (Seconds)
Sheerness G1 - SH1
Sheerness G2 - SH2
Battle River G3 - BR3
Battle River G4 - BR4
Battle River G5 - BR5

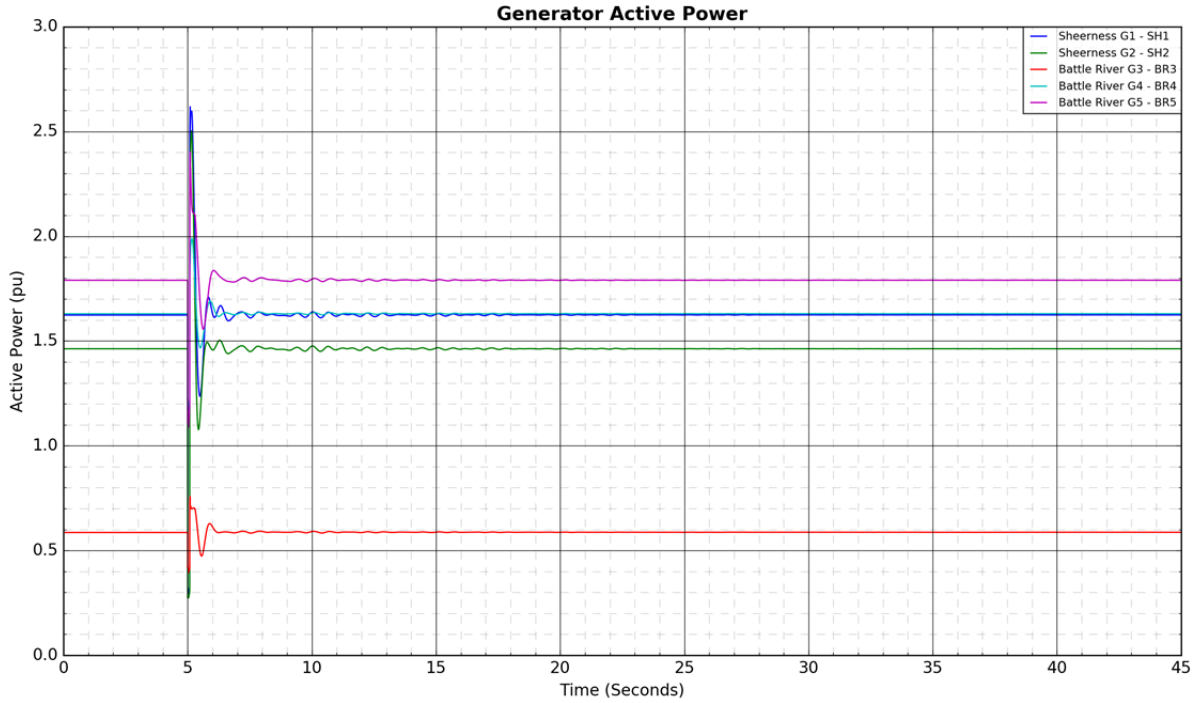
Generator Active Power
Active Power (pu)
Time (Seconds)
Sheerness G1 - SH1
Sheerness G2 - SH2
Battle River G3 - BR3
Battle River G4 - BR4
Battle River G5 - BR5

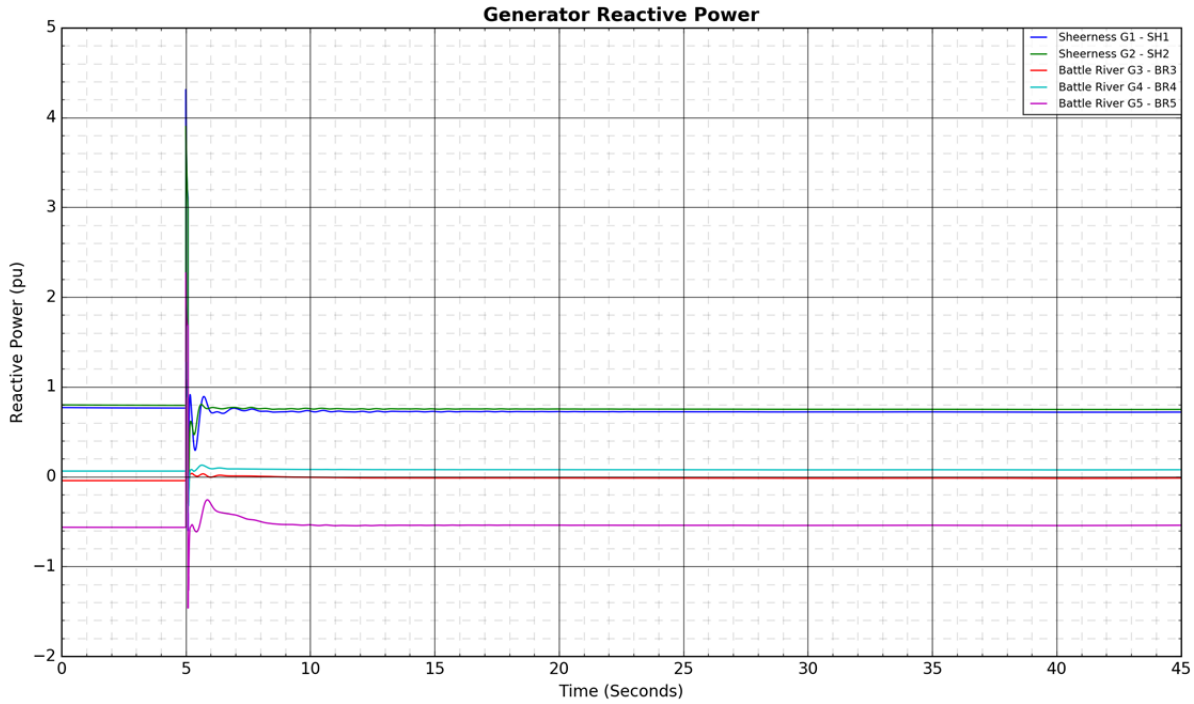
Generator Reactive Power
Sheerness G1 - SH1
Sheerness G2 - SH2
Battle River G3 - BR3
Battle River G4 - BR4
Battle River G5 - BR5
Reactive Power (pu)
Time (Seconds)

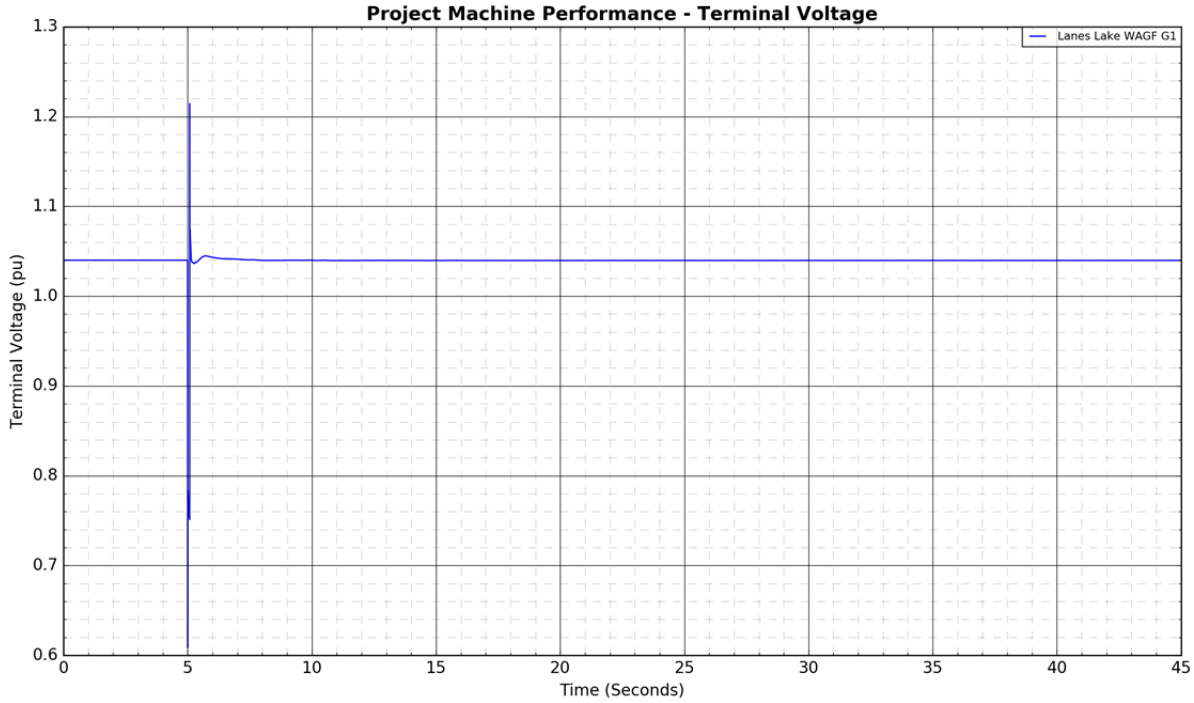
Project Machine Performance - Terminal Voltage
Lanes Lake WAGF G1
Terminal Voltage (pu)
Time (Seconds)


Project Machine Performance - Active Power
Lanes Lake WAGF G1
Active Power (pu)
Time (Seconds)
2.4
2.2
2.0
1.8
1.6
1.4
1.2
1.0
0.8
0
5
10
15
20
25
30
35
40
45

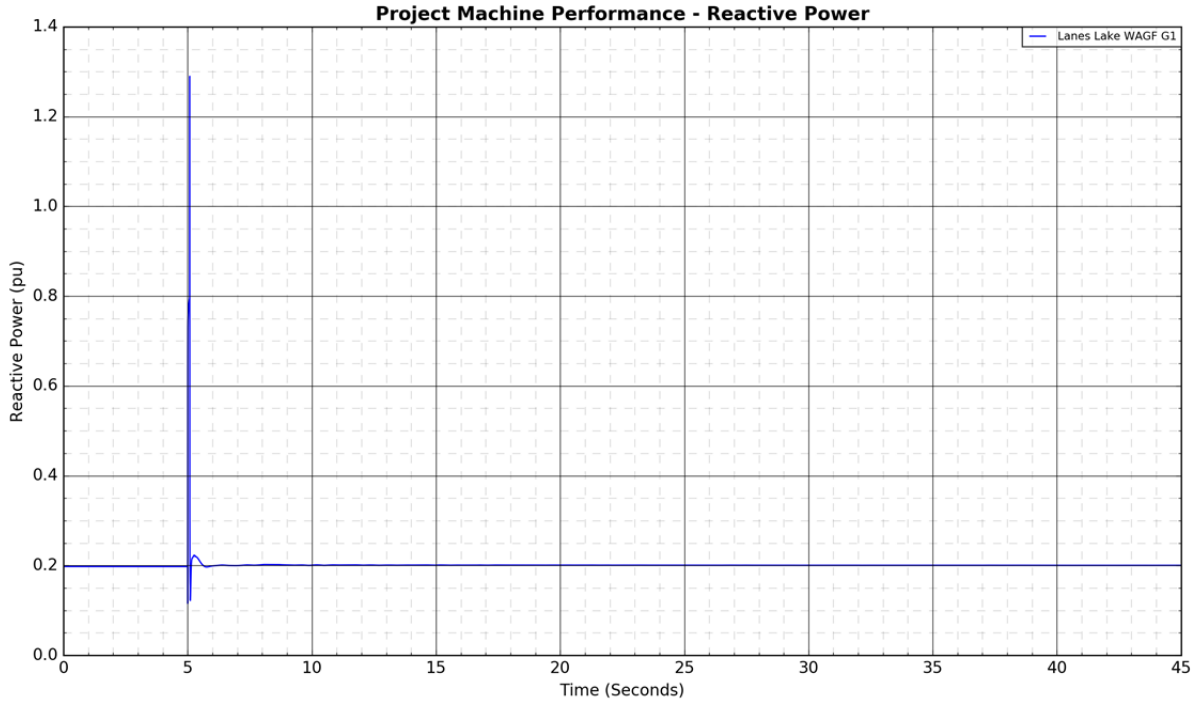
Project Machine Performance - Reactive Power
Lanes Lake WAGF G1
Reactive Power (pu)
Time (Seconds)
1.4
1.2
1.0
0.8
0.6
0.4
0.2
0.0
0
5
10
15
20
25
30
35
40
45


Branch Active Power Flows
9L93 (Pioneer 805S - Halkirk 615S)
9L175 (Pioneer 805S - Tincherbray 972S)
9L16 (Tincherbray 972S - Cordel 755S)
9L59 (Anderson 801S - Tinchebray 972S)
Active Power (MW)
Time (Seconds)

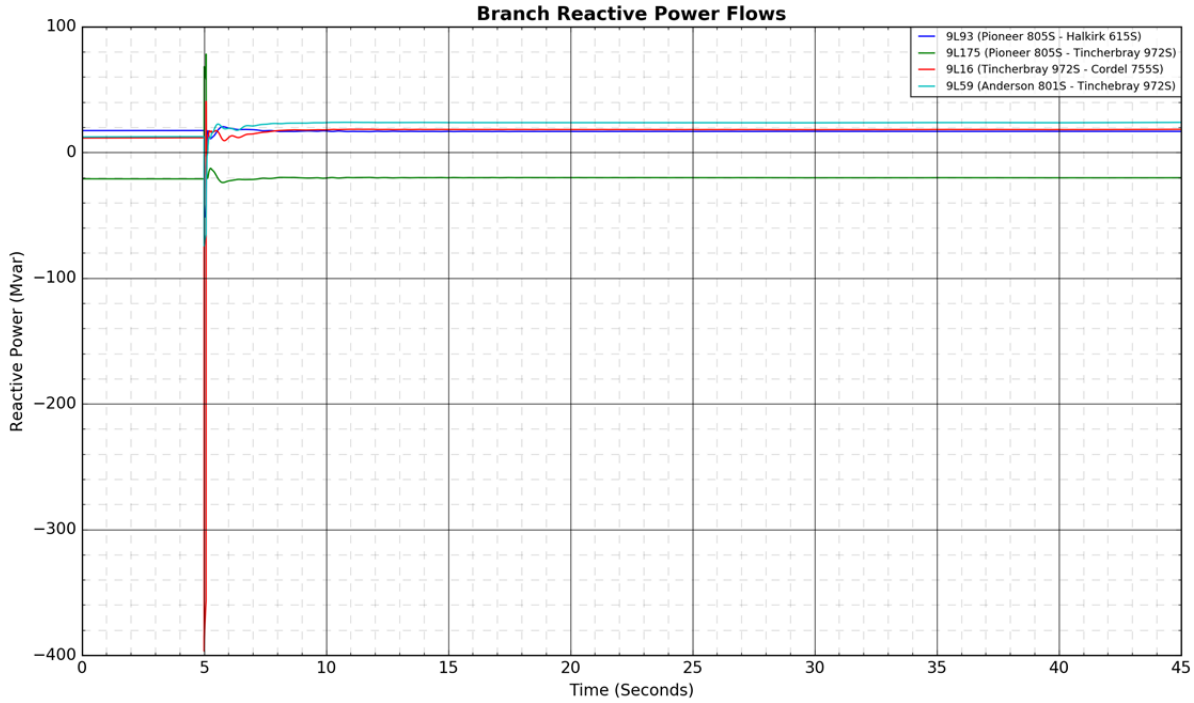
Branch Reactive Power Flows
9L93 (Pioneer 805S - Halkirk 615S)
9L175 (Pioneer 805S - Tincherbray 972S)
9L16 (Tincherbray 972S - Cordel 755S)
9L59 (Anderson 801S - Tinchebray 972S)
Reactive Power (Mvar)
Time (Seconds)

Figure A4-4: 9L29 (Oakland 946S - Coyote Lake 963S): 3-phase fault at Coyote Lake 963S

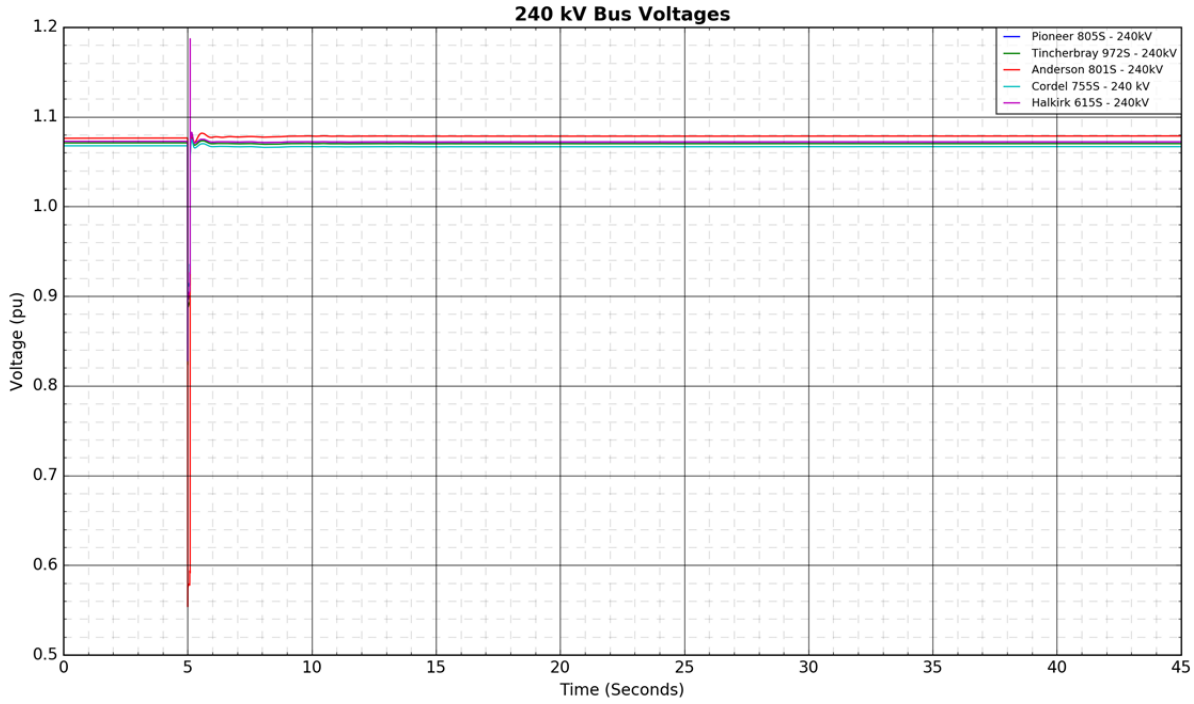

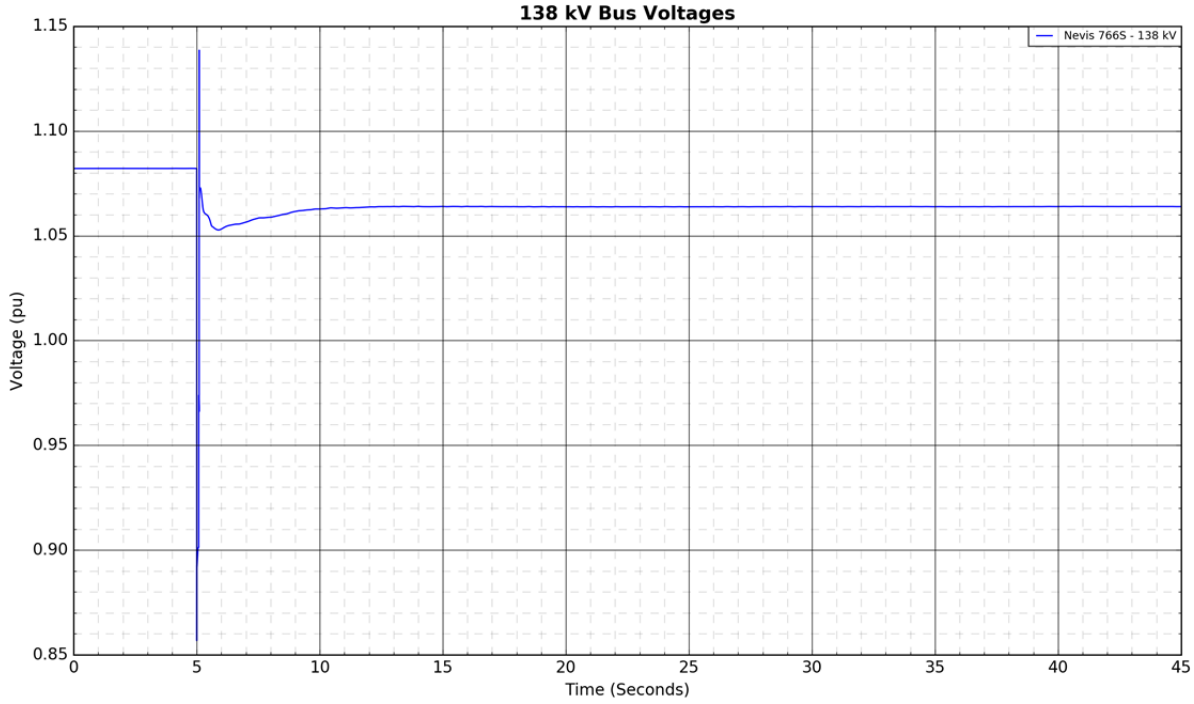

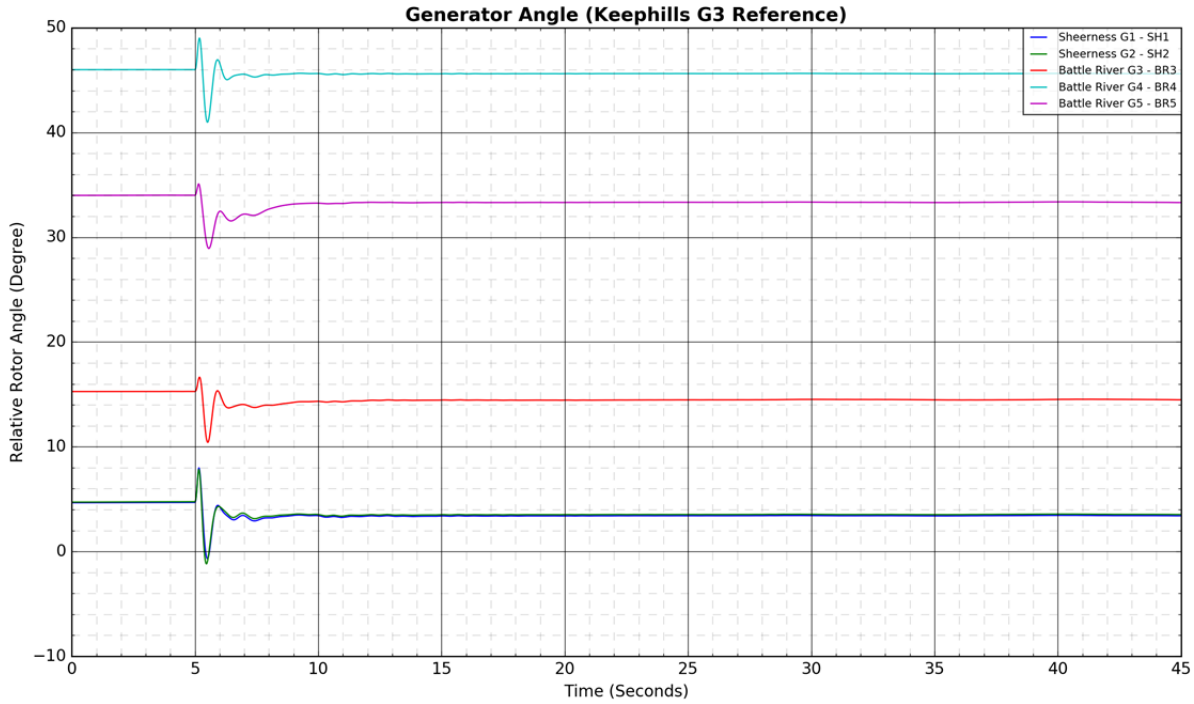
Generator Angle (Keephills G3 Reference)
Relative Rotor Angle (Degree)
Time (Seconds)
Sheerness G1 - SH1
Sheerness G2 - SH2
Battle River G3 - BR3
Battle River G4 - BR4
Battle River G5 - BR5

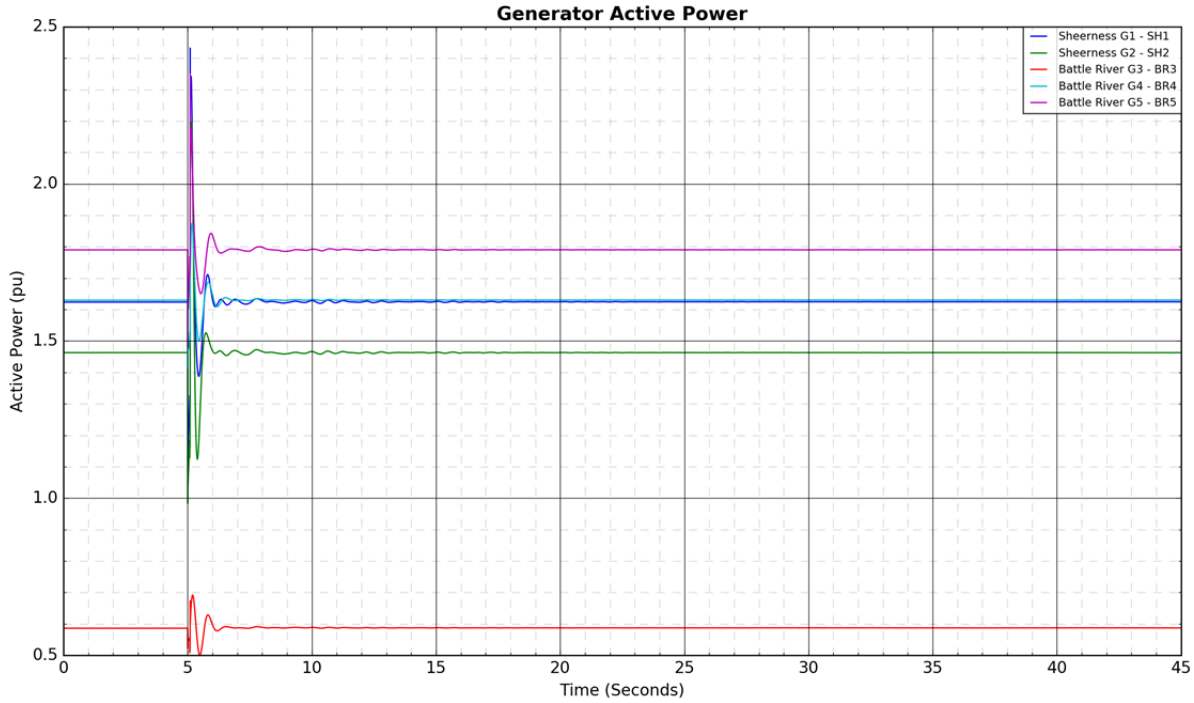
Generator Active Power
Active Power (pu)
Time (Seconds)
Sheerness G1 - SH1
Sheerness G2 - SH2
Battle River G3 - BR3
Battle River G4 - BR4
Battle River G5 - BR5

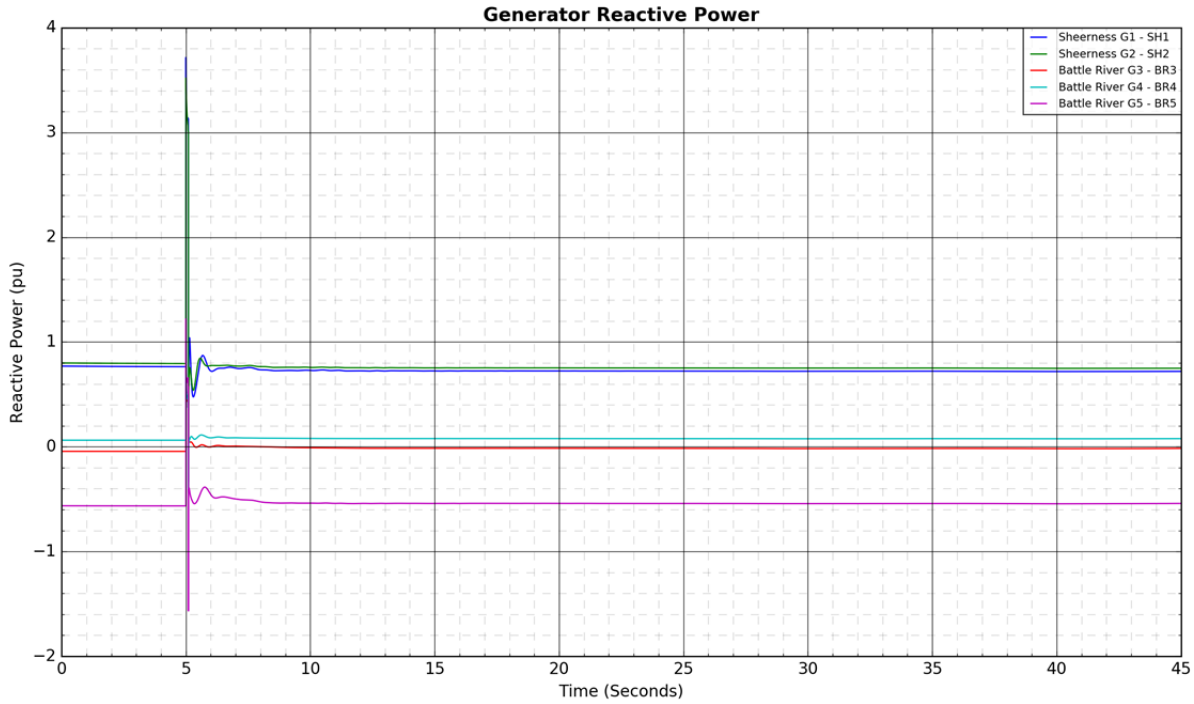
Generator Reactive Power
Sheerness G1 - SH1
Sheerness G2 - SH2
Battle River G3 - BR3
Battle River G4 - BR4
Battle River G5 - BR5
Reactive Power (pu)
Time (Seconds)

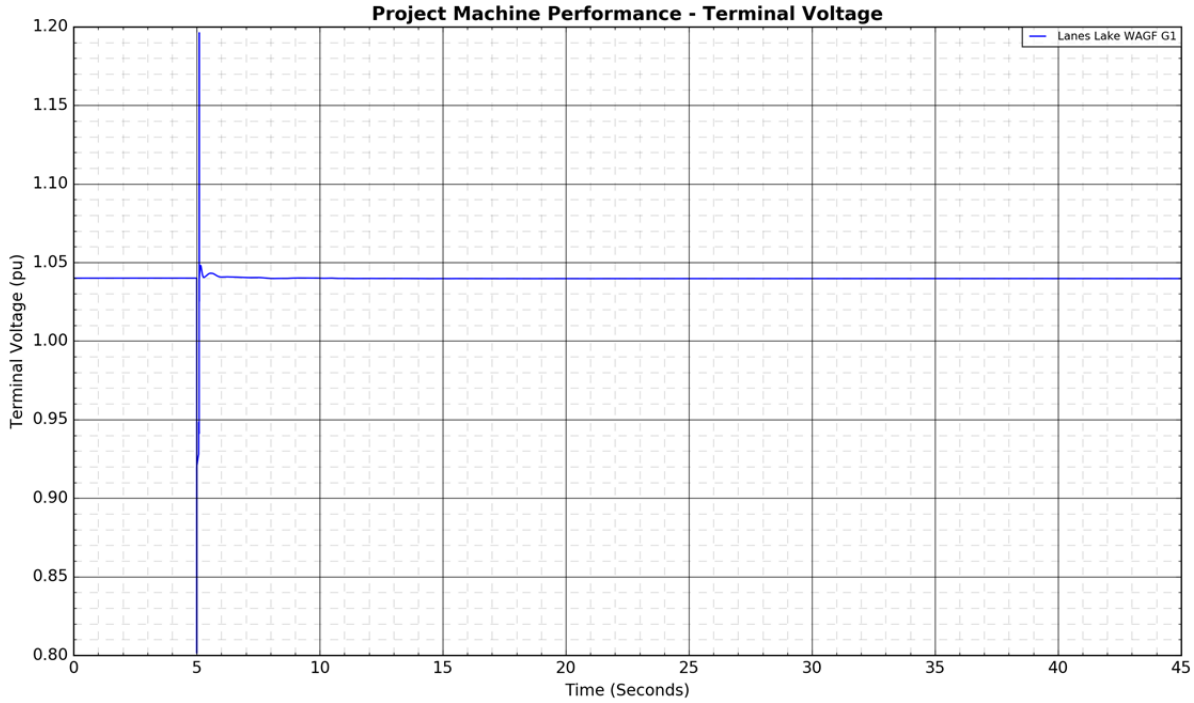
Project Machine Performance - Terminal Voltage
Lanes Lake WAGF G1
Terminal Voltage (pu)
Time (Seconds)


Project Machine Performance - Active Power
Lanes Lake WAGF G1
Active Power (pu)
Time (Seconds)
2.0
1.9
1.8
1.7
1.6
1.5
1.4
1.3
1.2
1.1
0
5
10
15
20
25
30
35
40
45

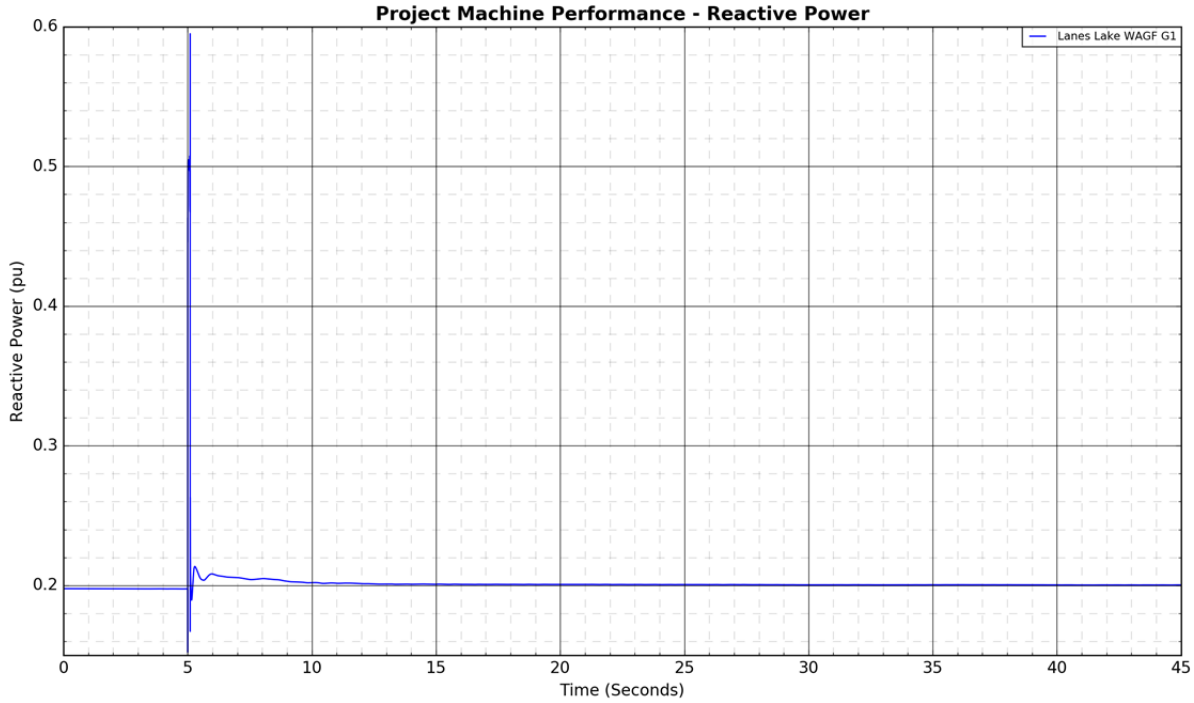
Project Machine Performance - Reactive Power
Lanes Lake WAGF G1
Reactive Power (pu)
Time (Seconds)
0.6
0.5
0.4
0.3
0.2
0
5
10
15
20
25
30
35
40
45


Branch Active Power Flows
9L93 (Pioneer 805S - Halkirk 615S)
9L175 (Pioneer 805S - Tincherbray 972S)
9L16 (Tincherbray 972S - Cordel 755S)
9L59 (Anderson 801S - Tinchebray 972S)
Active Power (MW)
Time (Seconds)

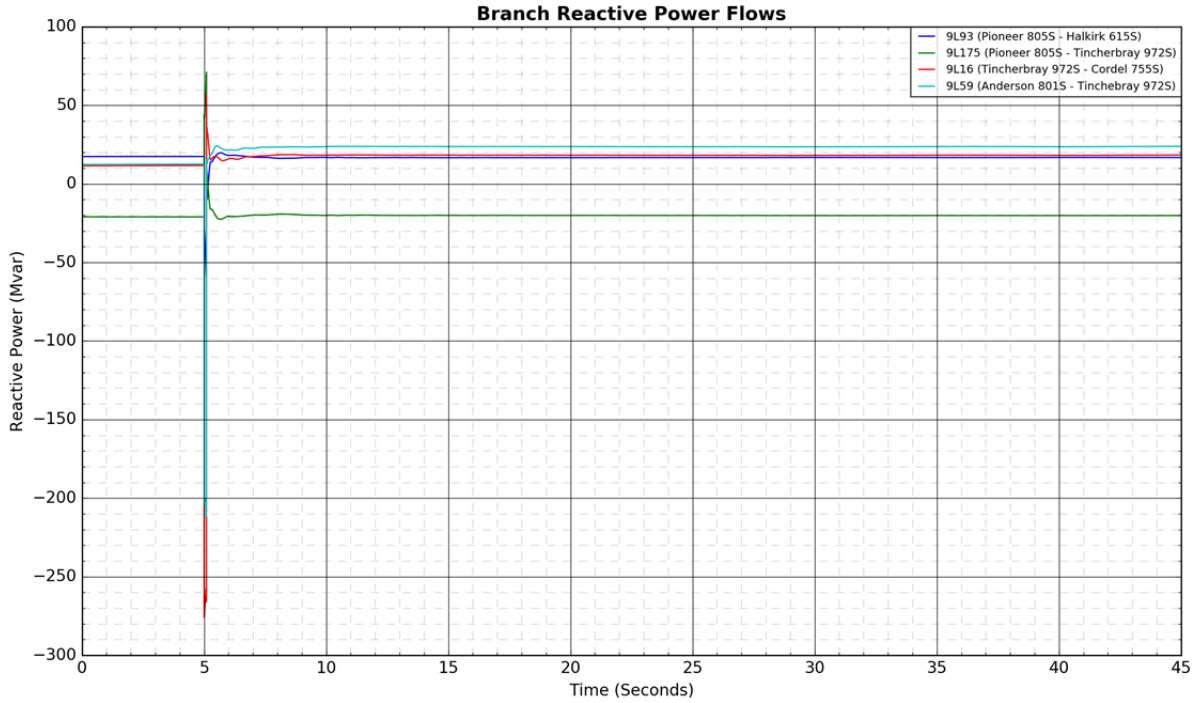
Branch Reactive Power Flows
9L93 (Pioneer 805S - Halkirk 615S)
9L175 (Pioneer 805S - Tincherbray 972S)
9L16 (Tincherbray 972S - Cordel 755S)
9L59 (Anderson 801S - Tinchebray 972S)
Reactive Power (Mvar)
Time (Seconds)

Figure A4-5: 9L20 (Cordel 755S - Nevis 766S): 3-phase fault at Cordel 755S

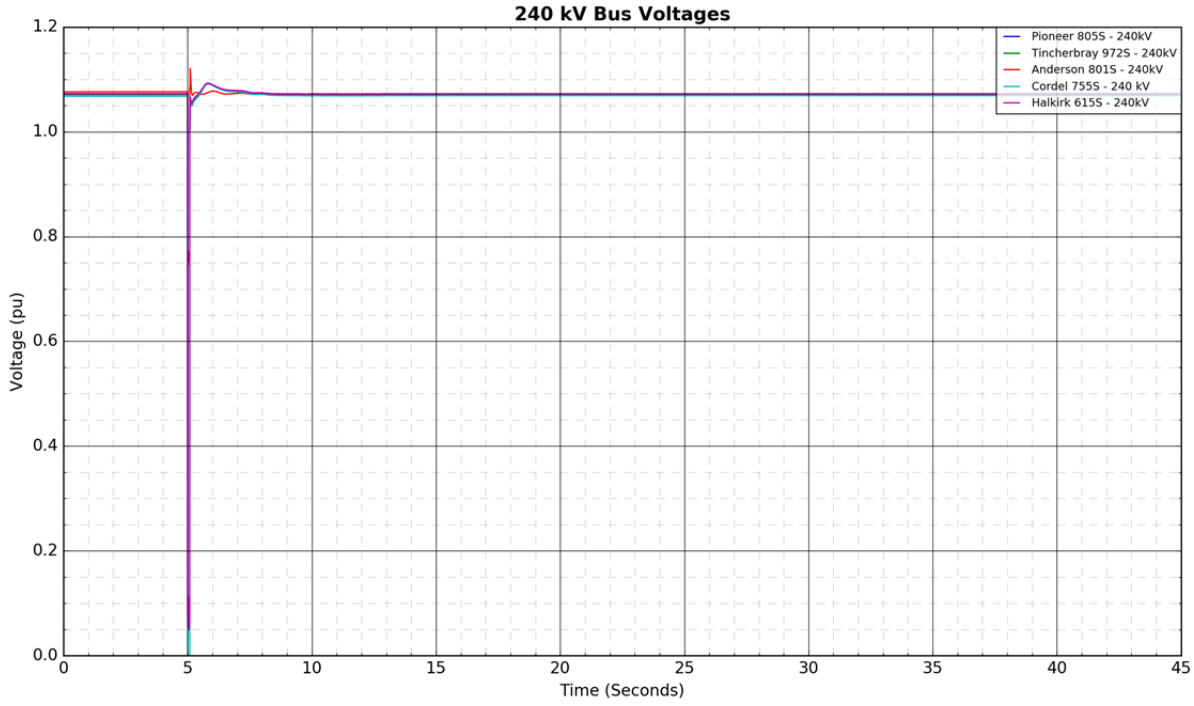

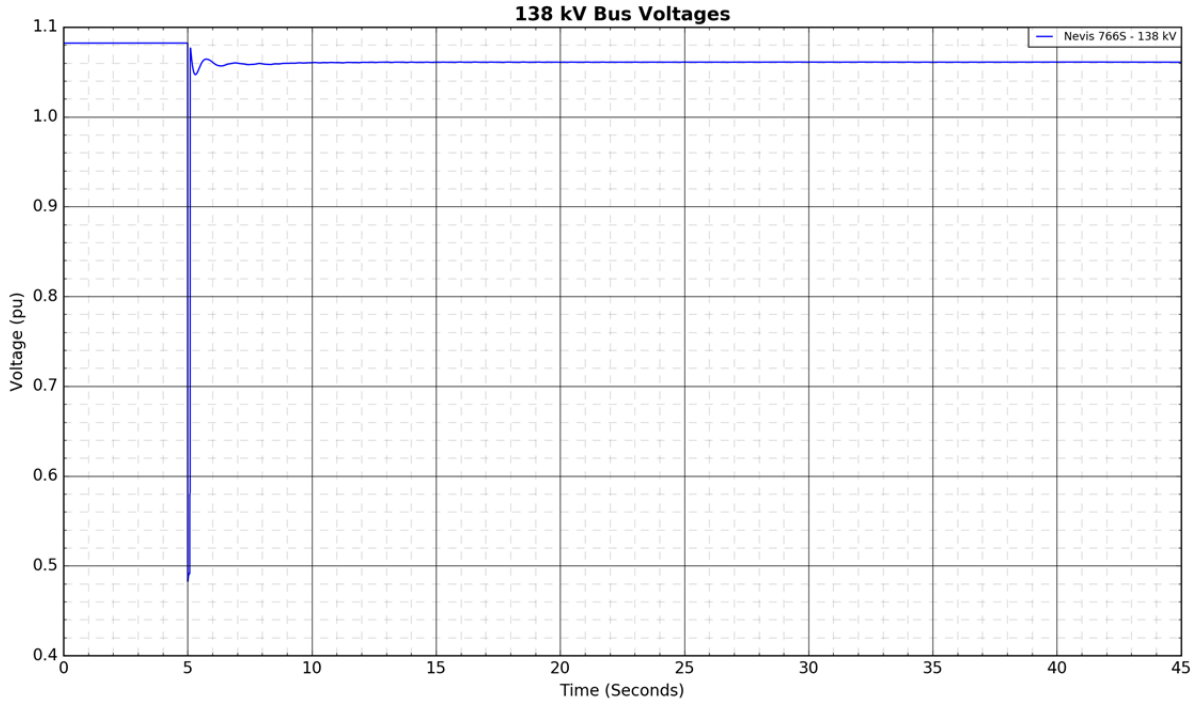

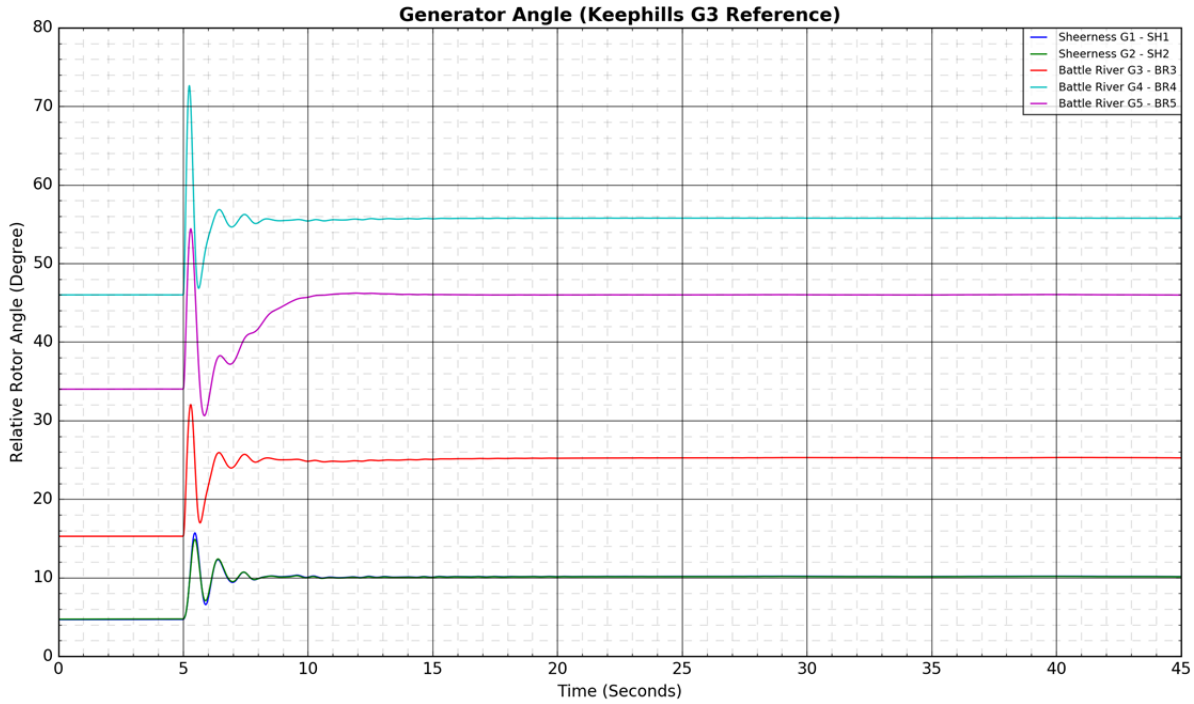
Generator Angle (Keephills G3 Reference)
Relative Rotor Angle (Degree)
Time (Seconds)
Sheerness G1 - SH1
Sheerness G2 - SH2
Battle River G3 - BR3
Battle River G4 - BR4
Battle River G5 - BR5
0
10
20
30
40
50
60
70
80
0
5
10
15
20
25
30
35
40
45

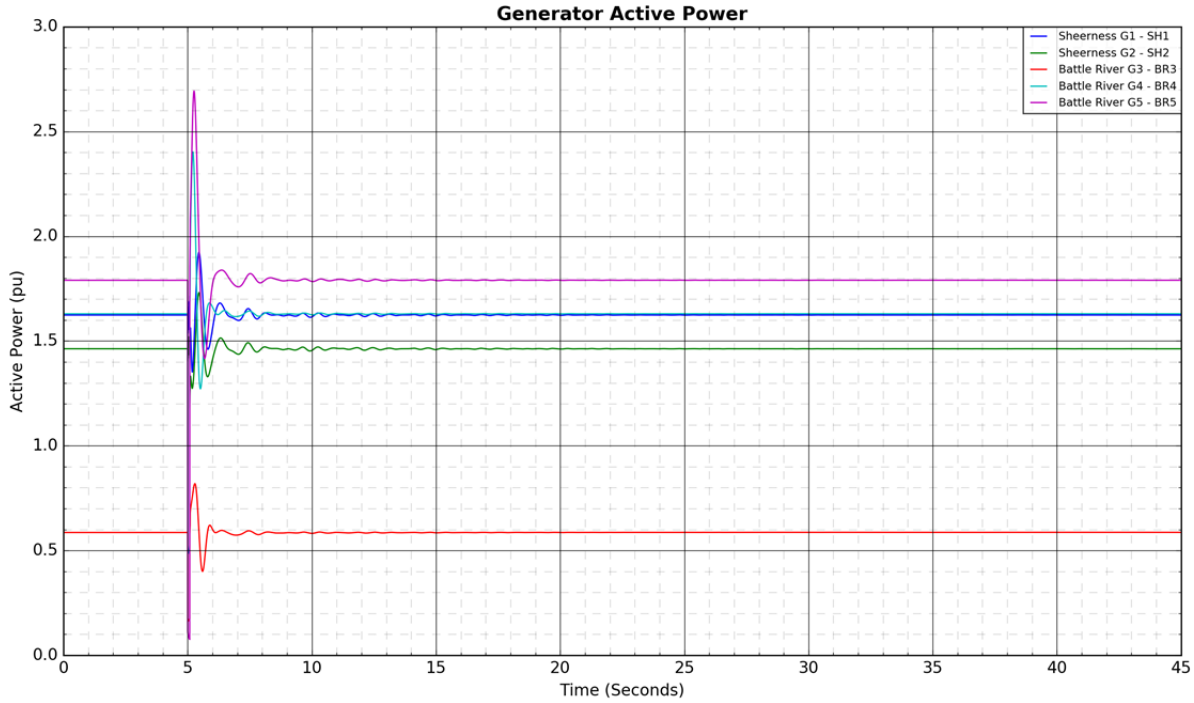
Generator Active Power
Active Power (pu)
Time (Seconds)
Sheerness G1 - SH1
Sheerness G2 - SH2
Battle River G3 - BR3
Battle River G4 - BR4
Battle River G5 - BR5
0.0
0.5
1.0
1.5
2.0
2.5
3.0
0
5
10
15
20
25
30
35
40
45

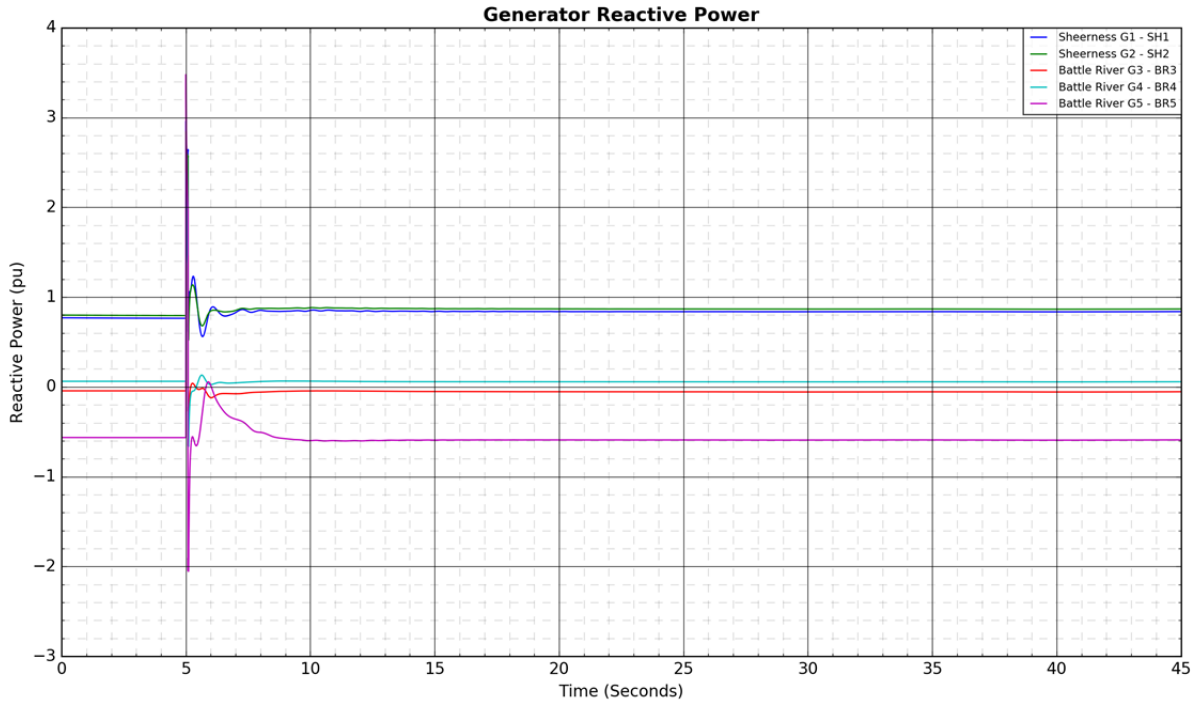
Generator Reactive Power
Sheerness G1 - SH1
Sheerness G2 - SH2
Battle River G3 - BR3
Battle River G4 - BR4
Battle River G5 - BR5
Reactive Power (pu)
Time (Seconds)

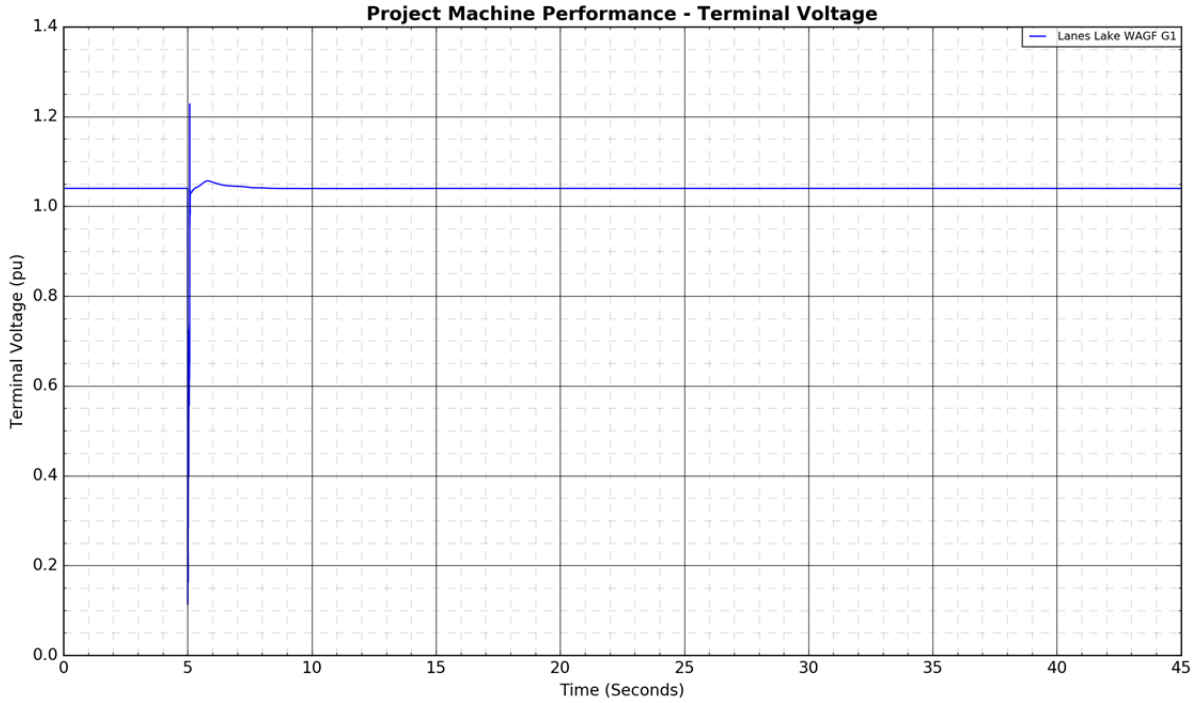
Project Machine Performance - Terminal Voltage
Lanes Lake WAGF G1
Terminal Voltage (pu)
Time (Seconds)


Project Machine Performance - Active Power
Lanes Lake WAGF G1
Active Power (pu)
Time (Seconds)
2.5
2.0
1.5
1.0
0.5
0.0
0
5
10
15
20
25
30
35
40
45

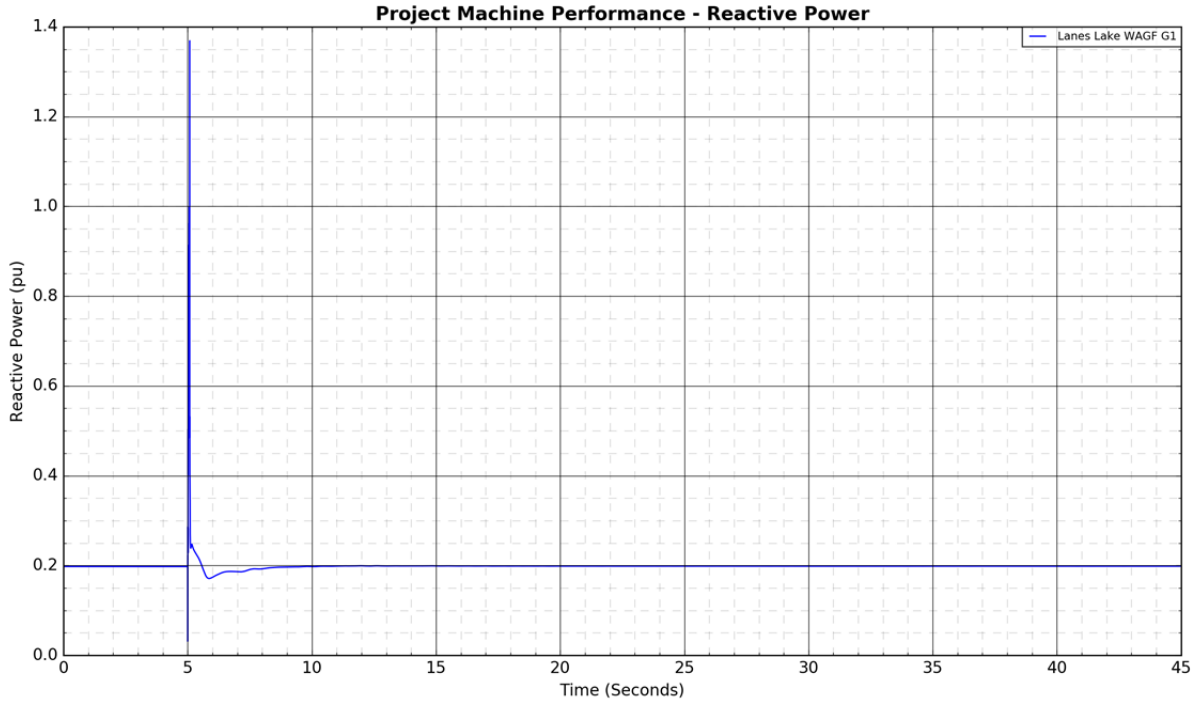
Project Machine Performance - Reactive Power
Lanes Lake WAGF G1
Reactive Power (pu)
Time (Seconds)
1.4
1.2
1.0
0.8
0.6
0.4
0.2
0.0
0
5
10
15
20
25
30
35
40
45

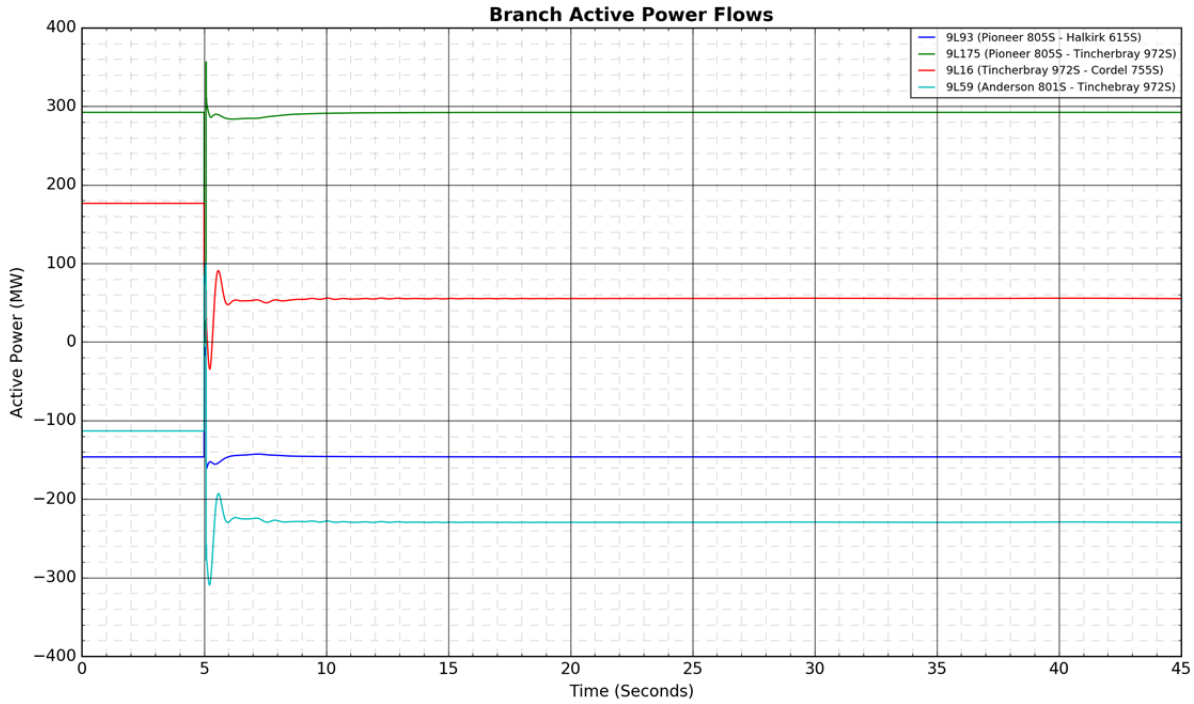
Branch Active Power Flows
9L93 (Pioneer 805S - Halkirk 615S)
9L175 (Pioneer 805S - Tincherbray 972S)
9L16 (Tincherbray 972S - Cordel 755S)
9L59 (Anderson 801S - Tinchebray 972S)
Active Power (MW)
Time (Seconds)

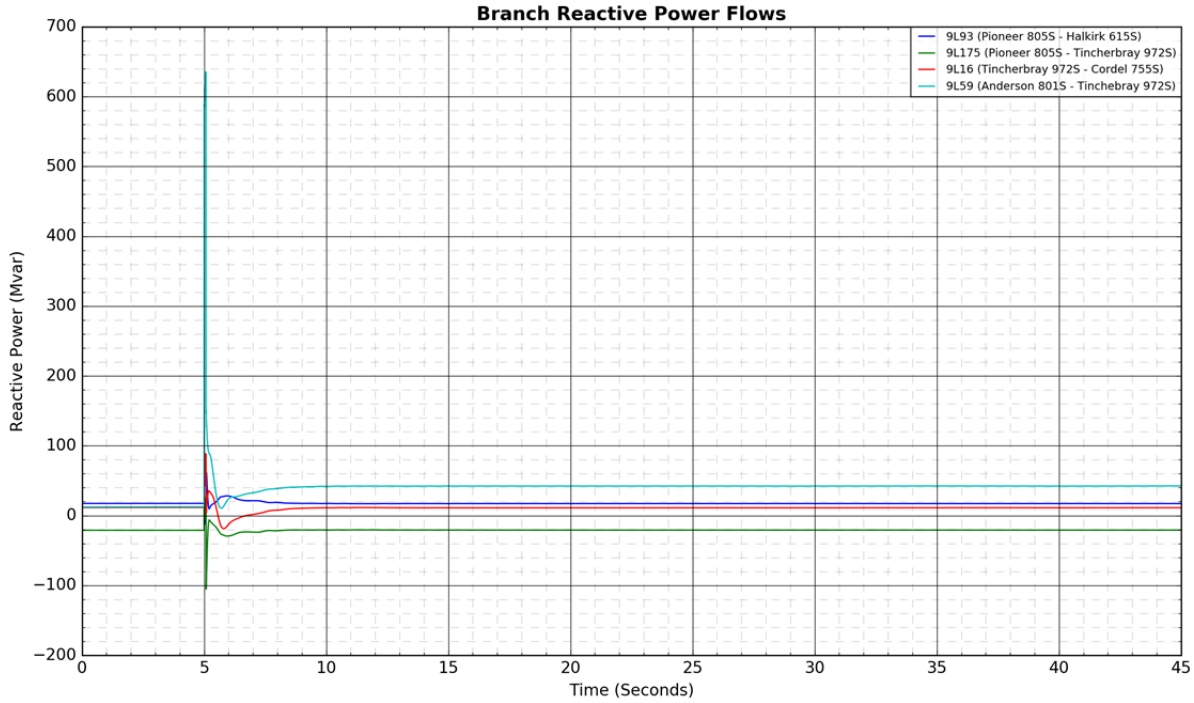
Branch Reactive Power Flows
9L93 (Pioneer 805S - Halkirk 615S)
9L175 (Pioneer 805S - Tincherbray 972S)
9L16 (Tincherbray 972S - Cordel 755S)
9L59 (Anderson 801S - Tinchebray 972S)
Reactive Power (Mvar)
Time (Seconds)

Figure A4-6: 9L20 (Cordel 755S - Nevis 766S): 3-phase fault at Nevis 766S

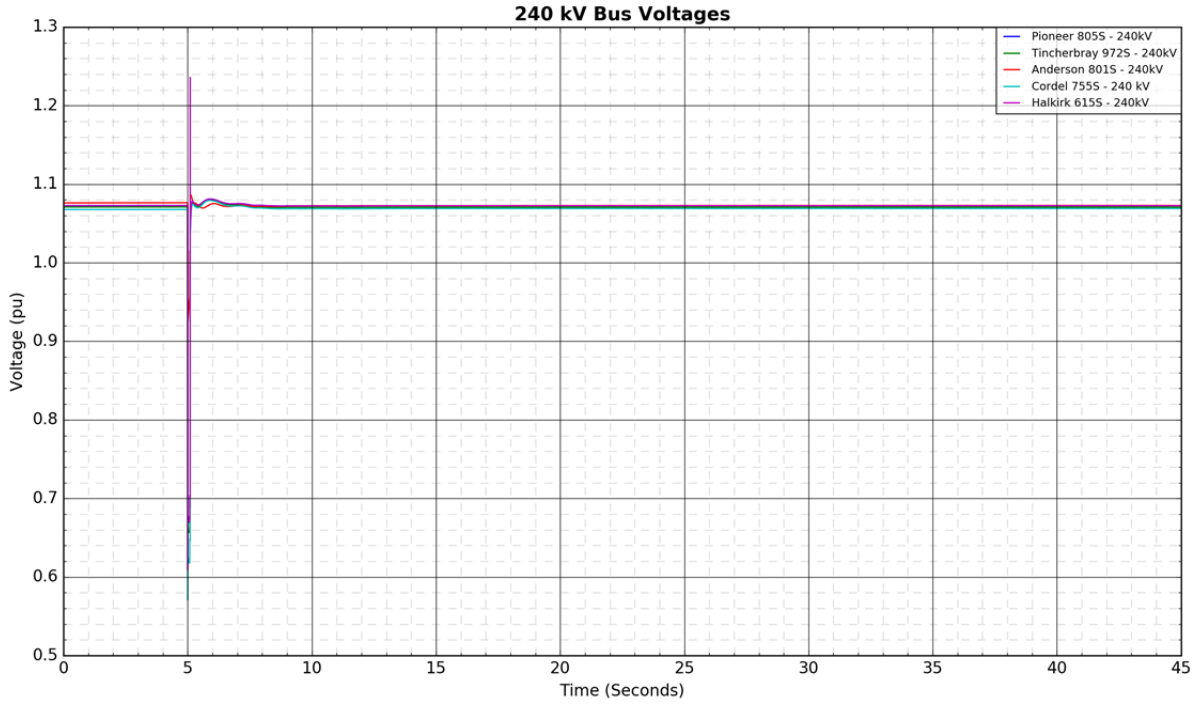

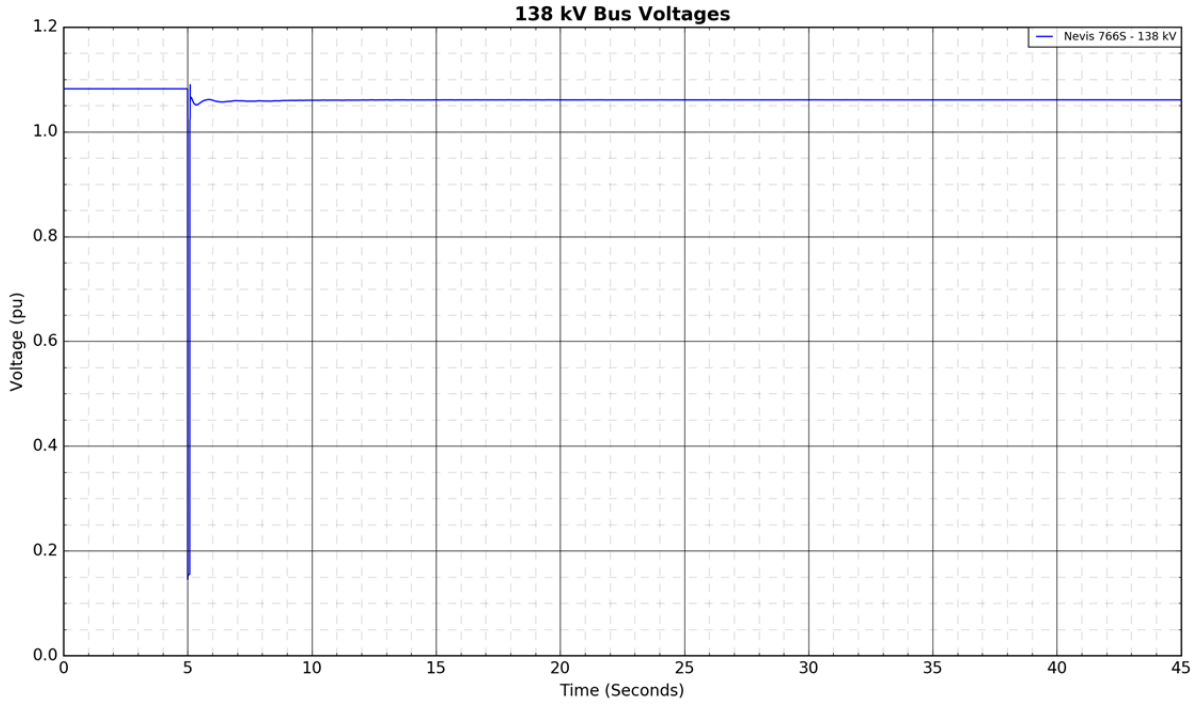

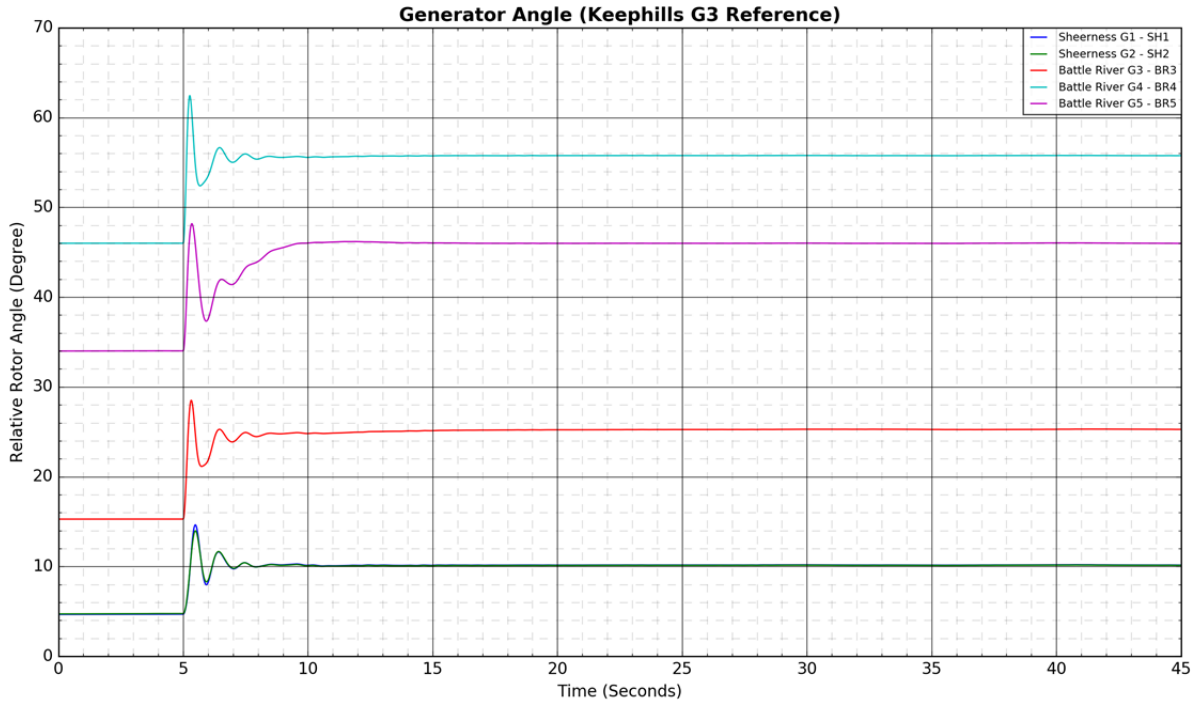
Generator Angle (Keephills G3 Reference)
Relative Rotor Angle (Degree)
Time (Seconds)
Sheerness G1 - SH1
Sheerness G2 - SH2
Battle River G3 - BR3
Battle River G4 - BR4
Battle River G5 - BR5
0
10
20
30
40
50
60
70
0
5
10
15
20
25
30
35
40
45

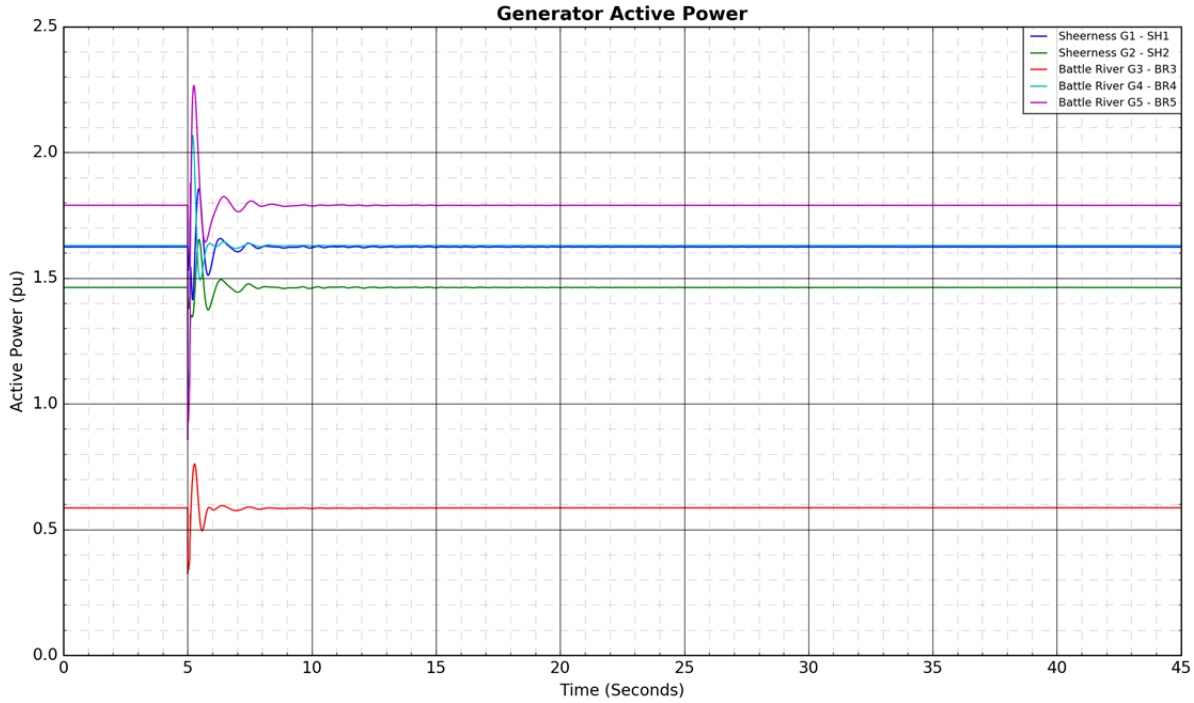
Generator Active Power
Active Power (pu)
Time (Seconds)
Sheerness G1 - SH1
Sheerness G2 - SH2
Battle River G3 - BR3
Battle River G4 - BR4
Battle River G5 - BR5
0.0
0.5
1.0
1.5
2.0
2.5
0
5
10
15
20
25
30
35
40
45

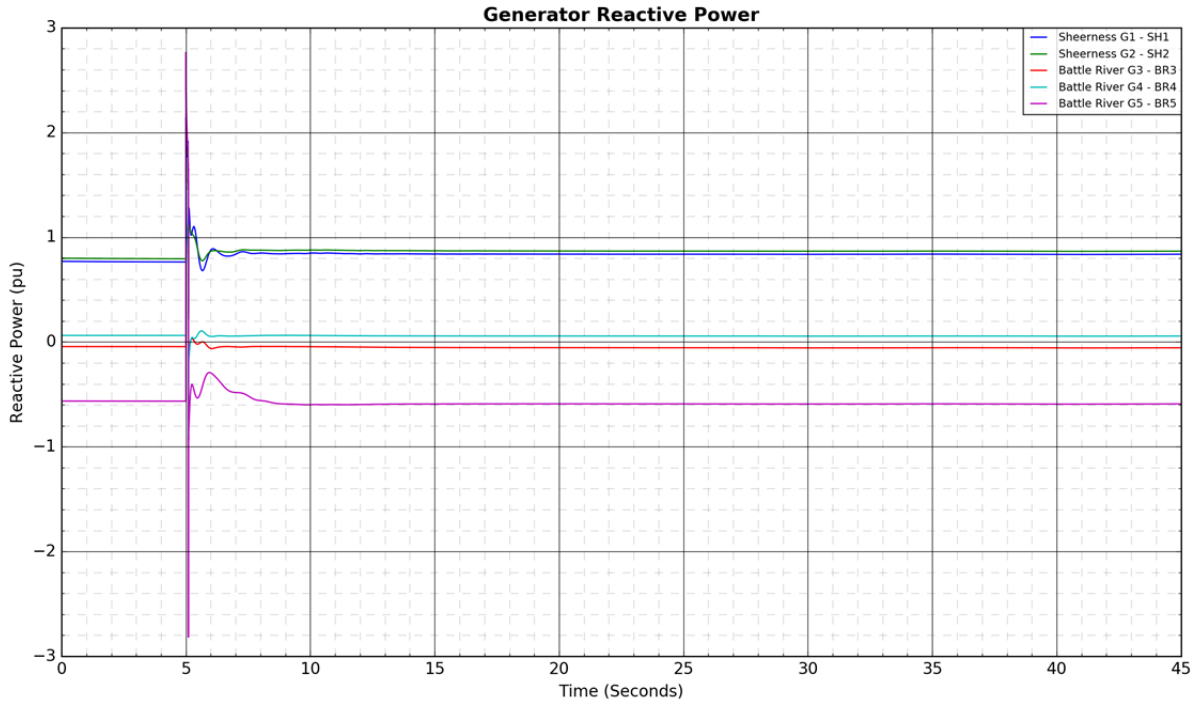
Generator Reactive Power
Sheerness G1 - SH1
Sheerness G2 - SH2
Battle River G3 - BR3
Battle River G4 - BR4
Battle River G5 - BR5
Reactive Power (pu)
Time (Seconds)

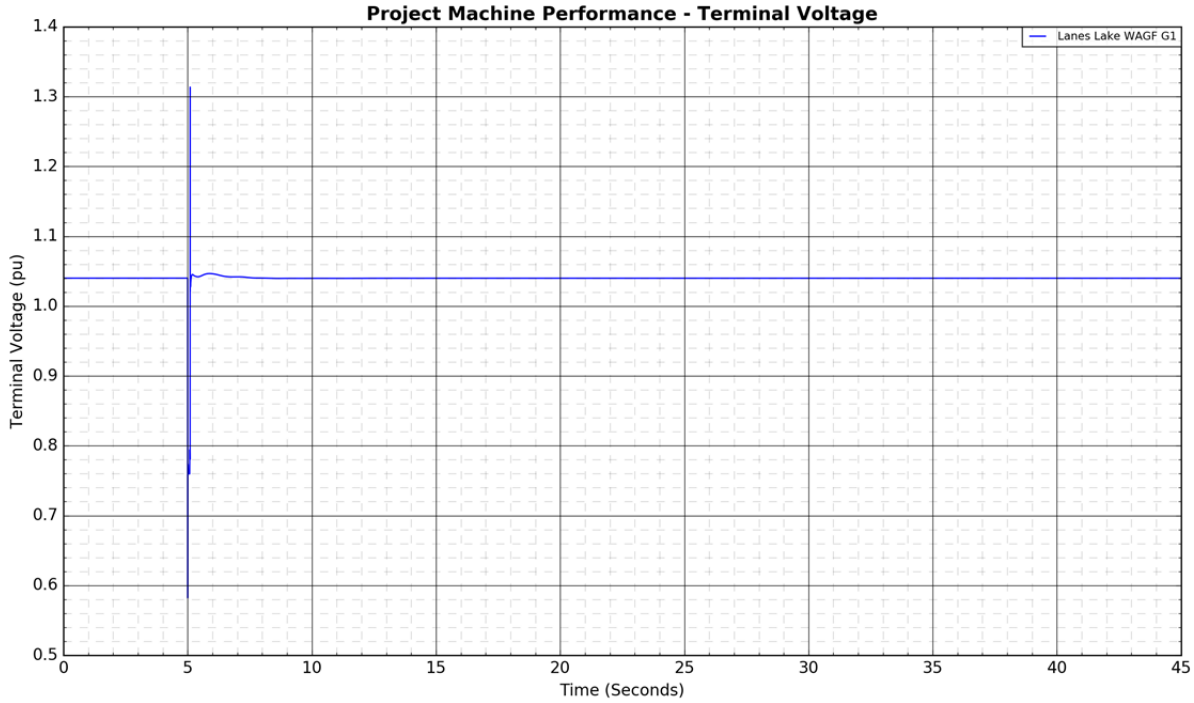
Project Machine Performance - Terminal Voltage
Lanes Lake WAGF G1
Terminal Voltage (pu)
Time (Seconds)


Project Machine Performance - Active Power
Lanes Lake WAGF G1
Active Power (pu)
Time (Seconds)
2.6
2.4
2.2
2.0
1.8
1.6
1.4
1.2
1.0
0.8
0
5
10
15
20
25
30
35
40
45

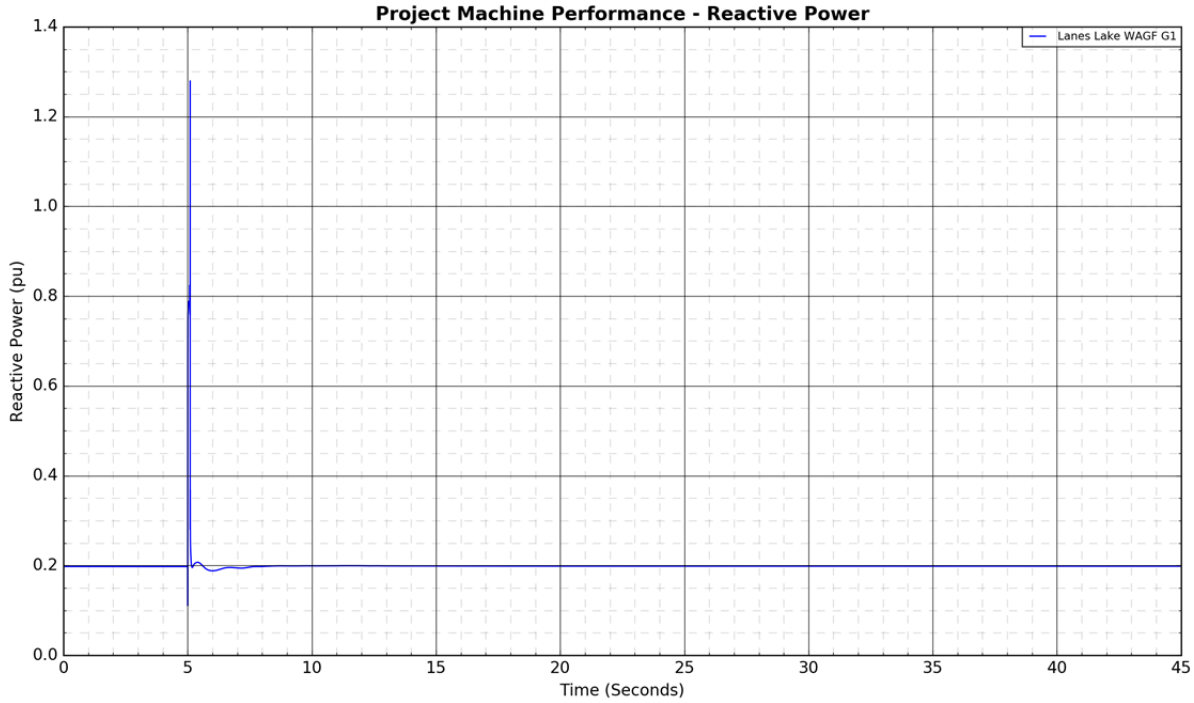
Project Machine Performance - Reactive Power
Lanes Lake WAGF G1
Reactive Power (pu)
Time (Seconds)
1.4
1.2
1.0
0.8
0.6
0.4
0.2
0.0
0
5
10
15
20
25
30
35
40
45

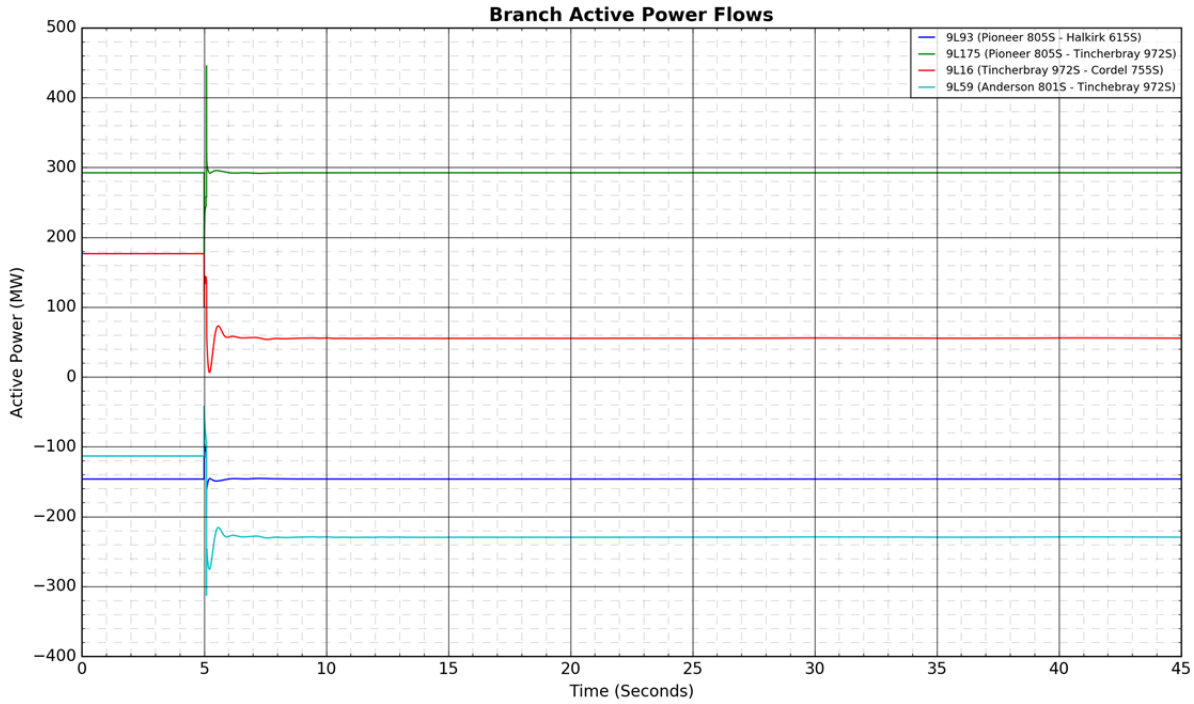
Branch Active Power Flows
9L93 (Pioneer 805S - Halkirk 615S)
9L175 (Pioneer 805S - Tincherbray 972S)
9L16 (Tincherbray 972S - Cordel 755S)
9L59 (Anderson 801S - Tinchebray 972S)
Active Power (MW)
Time (Seconds)

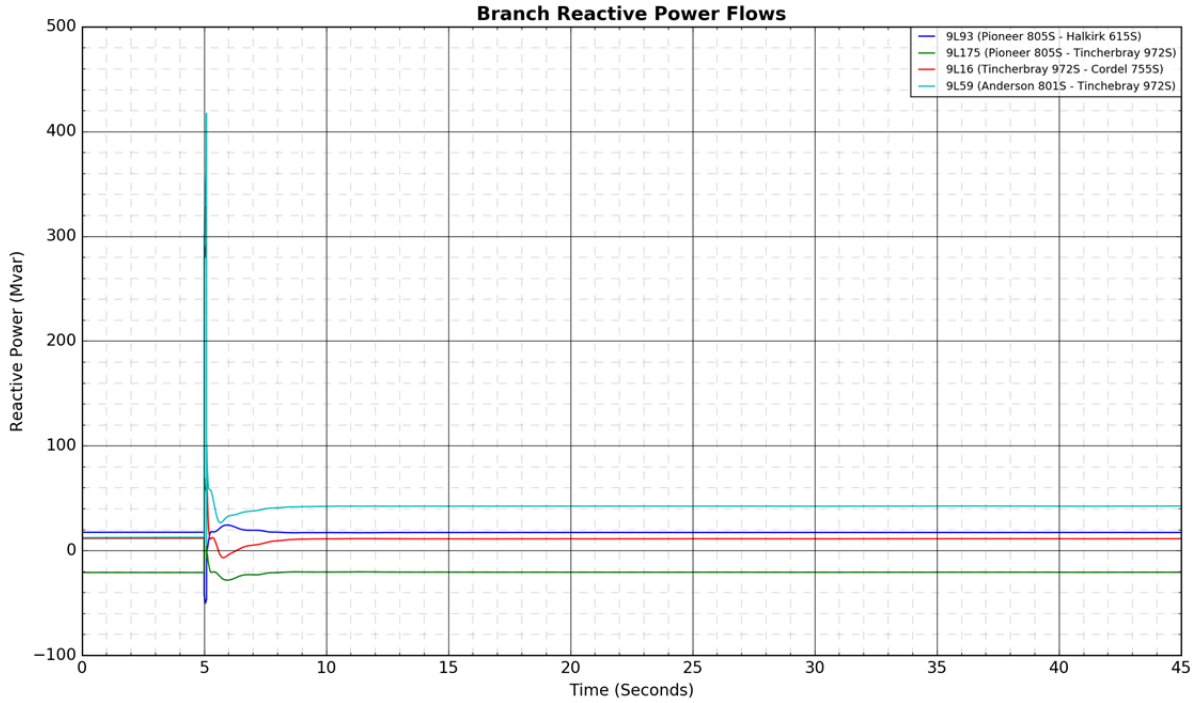
Branch Reactive Power Flows
9L93 (Pioneer 805S - Halkirk 615S)
9L175 (Pioneer 805S - Tincherbray 972S)
9L16 (Tincherbray 972S - Cordel 755S)
9L59 (Anderson 801S - Tinchebray 972S)
Reactive Power (Mvar)
Time (Seconds)


Branch Active Power Flows
9L93 (Pioneer 805S - Halkirk 615S)
9L175 (Pioneer 805S - Tincherbray 972S)
9L59 (Anderson 801S - Tinchebray 972S)
Active Power (MW)
Time (Seconds)

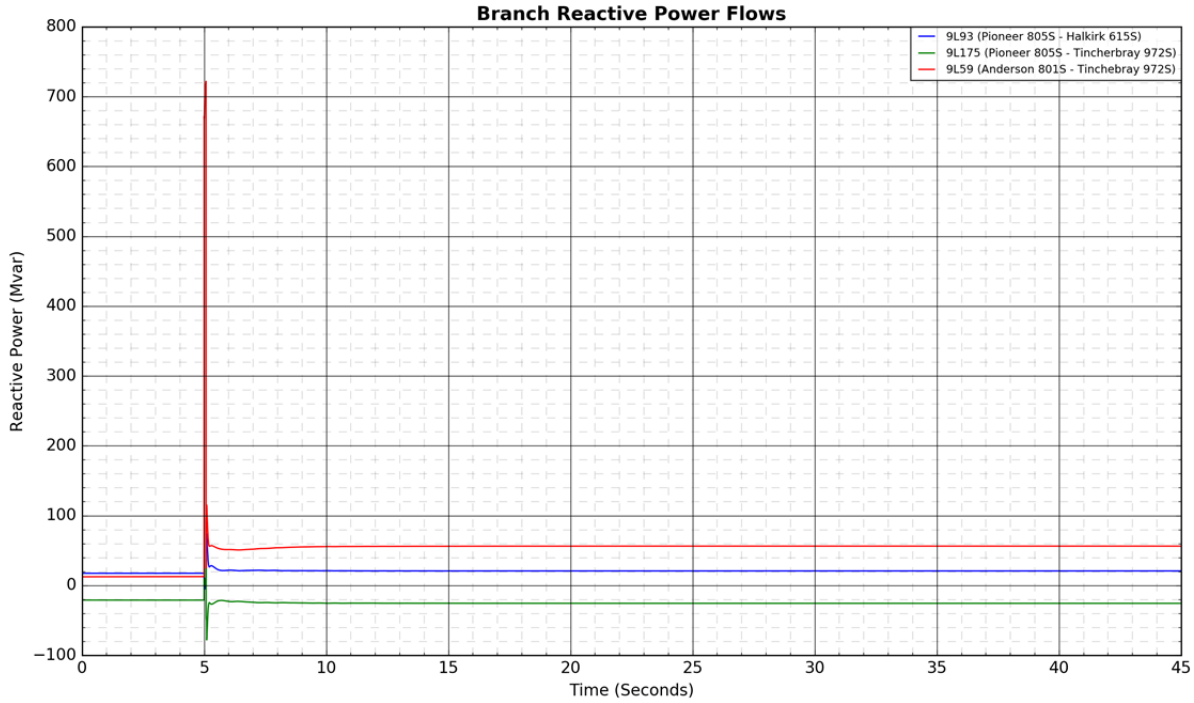
Branch Reactive Power Flows
9L93 (Pioneer 805S - Halkirk 615S)
9L175 (Pioneer 805S - Tincherbray 972S)
9L59 (Anderson 801S - Tinchebray 972S)
Reactive Power (Mvar)
Time (Seconds)

Figure A4-7: 9L16 (Tinchebray 972S - Cordel 755S): 3-phase fault at Cordel 755S

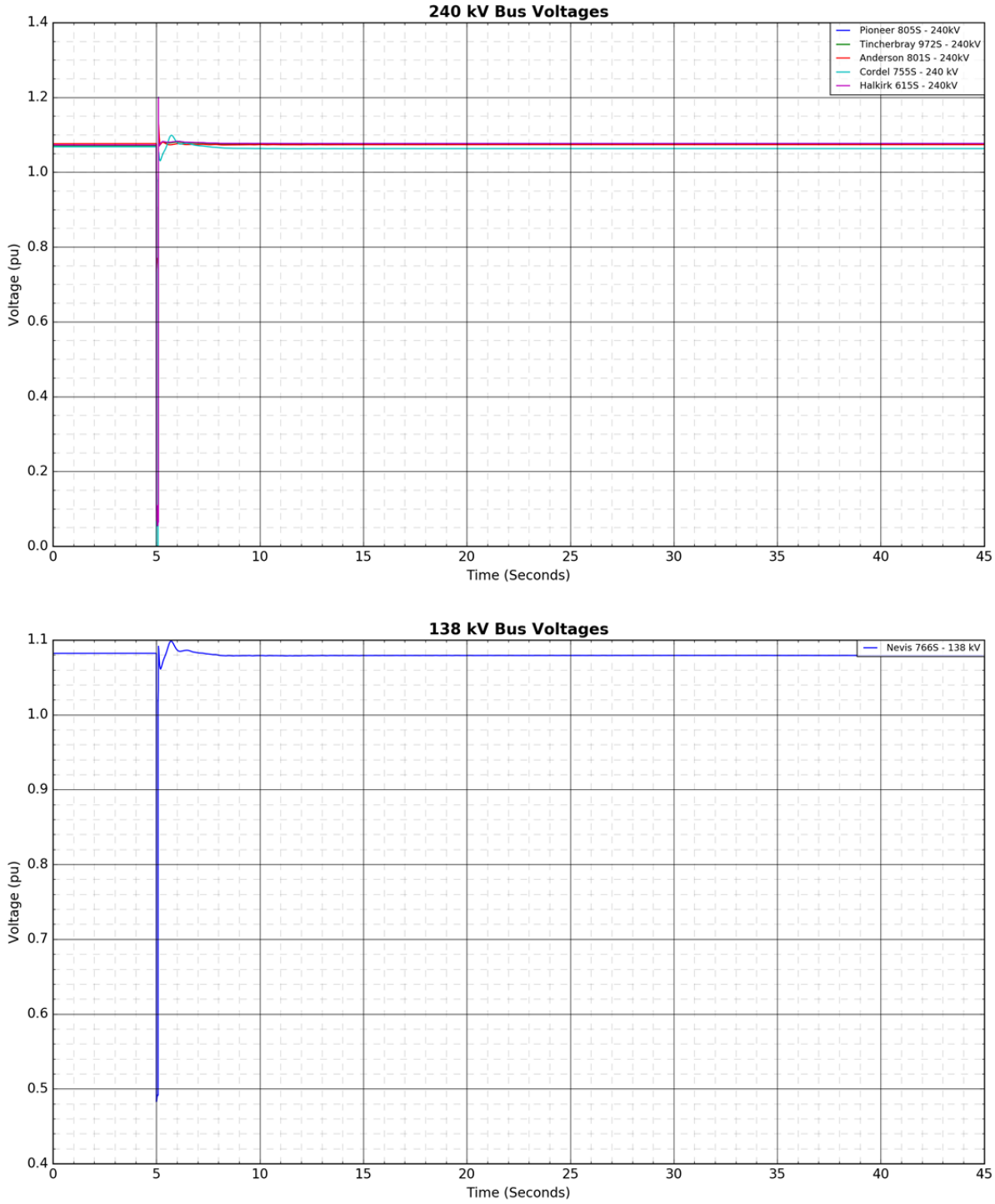

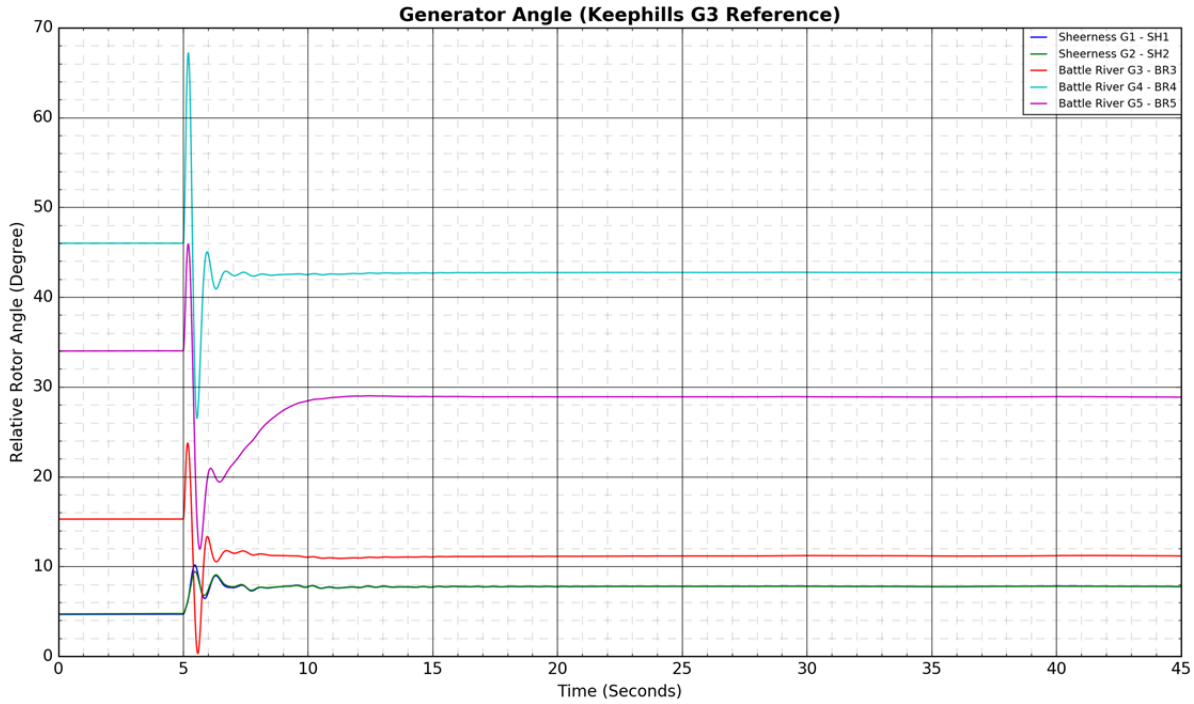
Generator Angle (Keephills G3 Reference)
Relative Rotor Angle (Degree)
Time (Seconds)
Sheerness G1 - SH1
Sheerness G2 - SH2
Battle River G3 - BR3
Battle River G4 - BR4
Battle River G5 - BR5
0
10
20
30
40
50
60
70
0
5
10
15
20
25
30
35
40
45

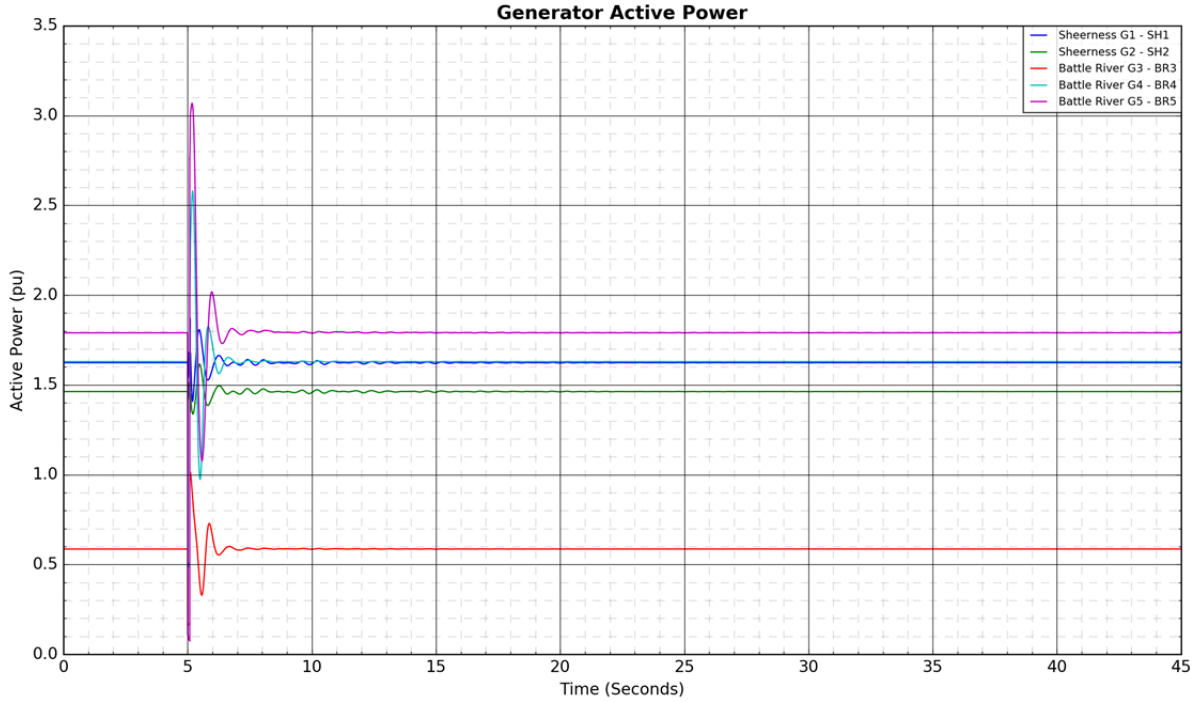
Generator Active Power
Active Power (pu)
Time (Seconds)
Sheerness G1 - SH1
Sheerness G2 - SH2
Battle River G3 - BR3
Battle River G4 - BR4
Battle River G5 - BR5
0.0
0.5
1.0
1.5
2.0
2.5
3.0
3.5
0
5
10
15
20
25
30
35
40
45

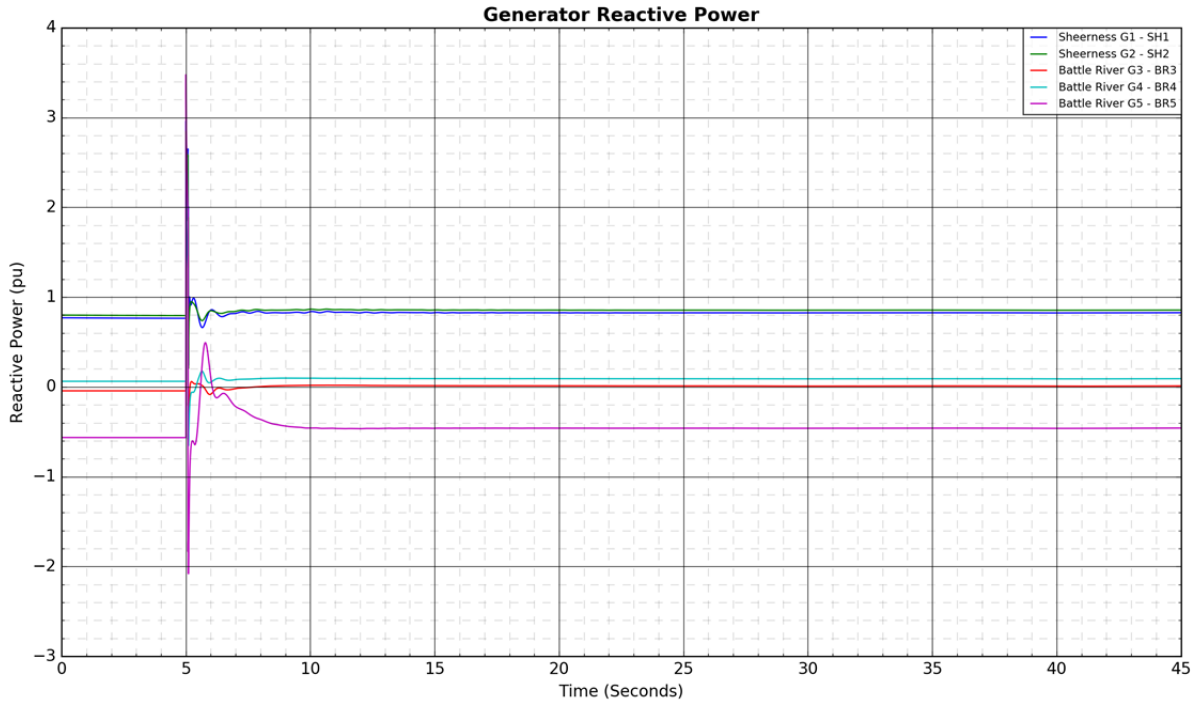
Generator Reactive Power
Sheerness G1 - SH1
Sheerness G2 - SH2
Battle River G3 - BR3
Battle River G4 - BR4
Battle River G5 - BR5
Reactive Power (pu)
Time (Seconds)

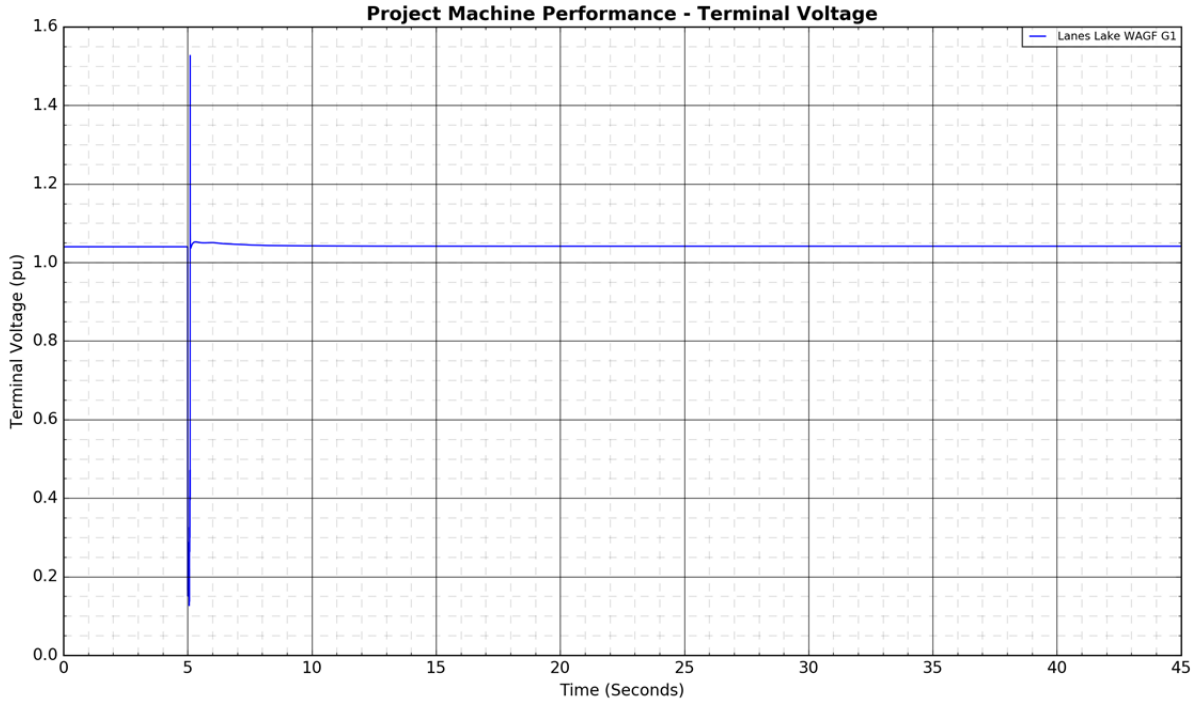
Project Machine Performance - Terminal Voltage
Lanes Lake WAGF G1
Terminal Voltage (pu)
Time (Seconds)


Project Machine Performance - Active Power
Lanes Lake WAGF G1
Active Power (pu)
Time (Seconds)
2.0
1.5
1.0
0.5
0.0
0
5
10
15
20
25
30
35
40
45

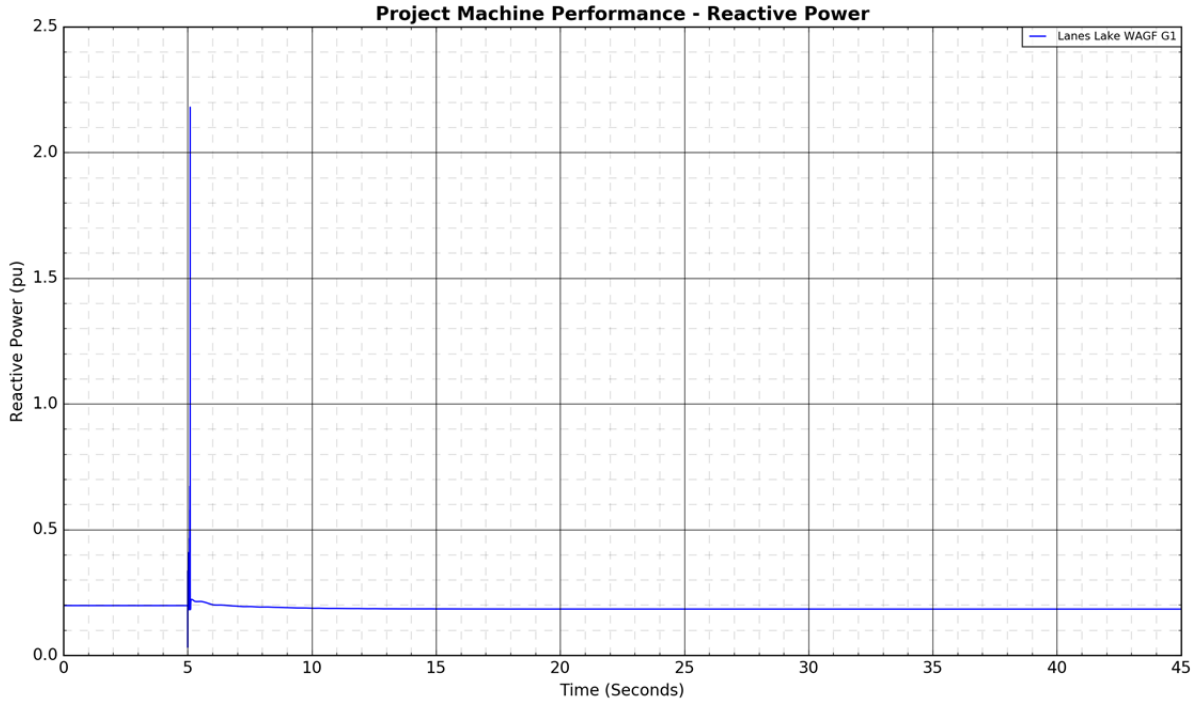
Project Machine Performance - Reactive Power
Lanes Lake WAGF G1
Reactive Power (pu)
Time (Seconds)
2.5
2.0
1.5
1.0
0.5
0.0
0
5
10
15
20
25
30
35
40
45


Branch Active Power Flows
9L93 (Pioneer 805S - Halkirk 615S)
9L175 (Pioneer 805S - Tincherbray 972S)
9L59 (Anderson 801S - Tinchebray 972S)
Active Power (MW)
Time (Seconds)

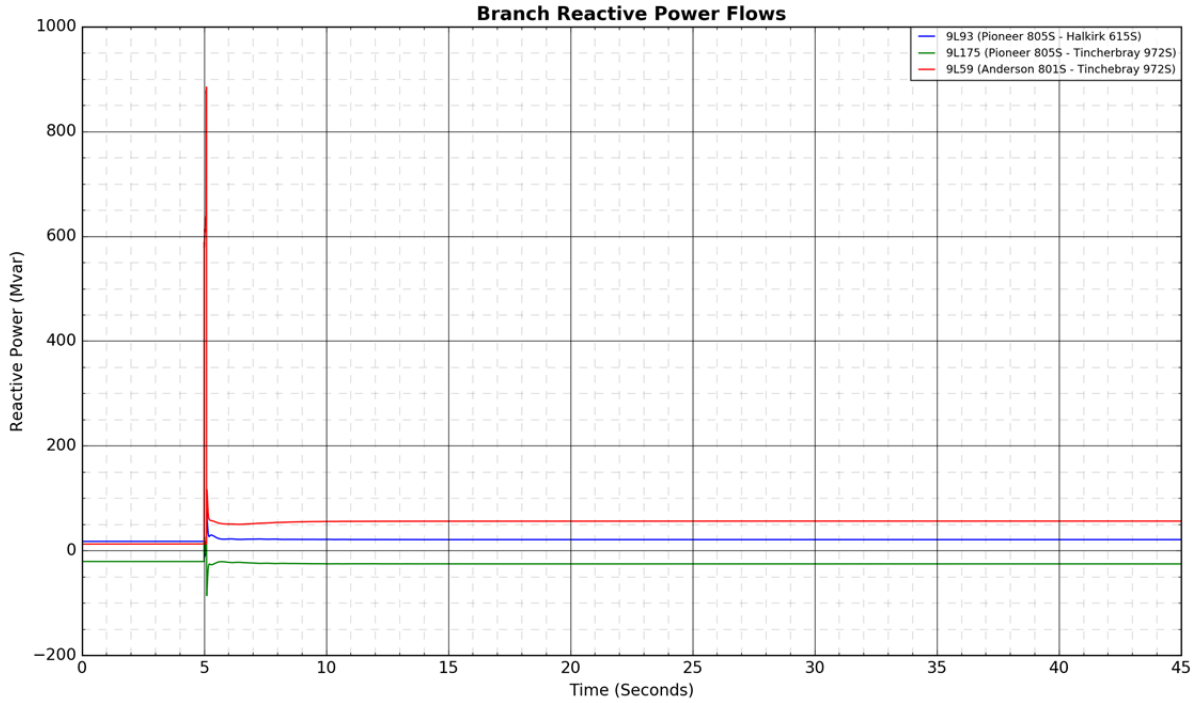
Branch Reactive Power Flows
9L93 (Pioneer 805S - Halkirk 615S)
9L175 (Pioneer 805S - Tincherbray 972S)
9L59 (Anderson 801S - Tinchebray 972S)
Reactive Power (Mvar)
Time (Seconds)

Figure A4-8: 9L16 (Tinchebray 972S - Cordel 755S): 3-phase fault at Tinchebray 972S



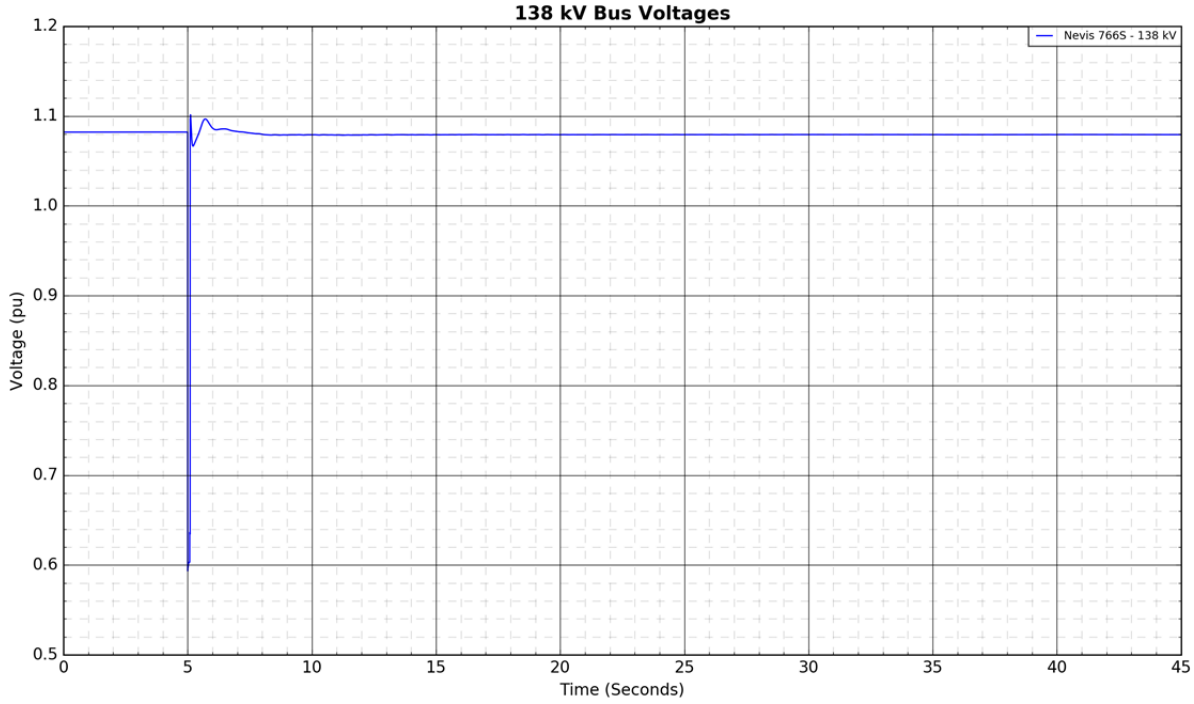

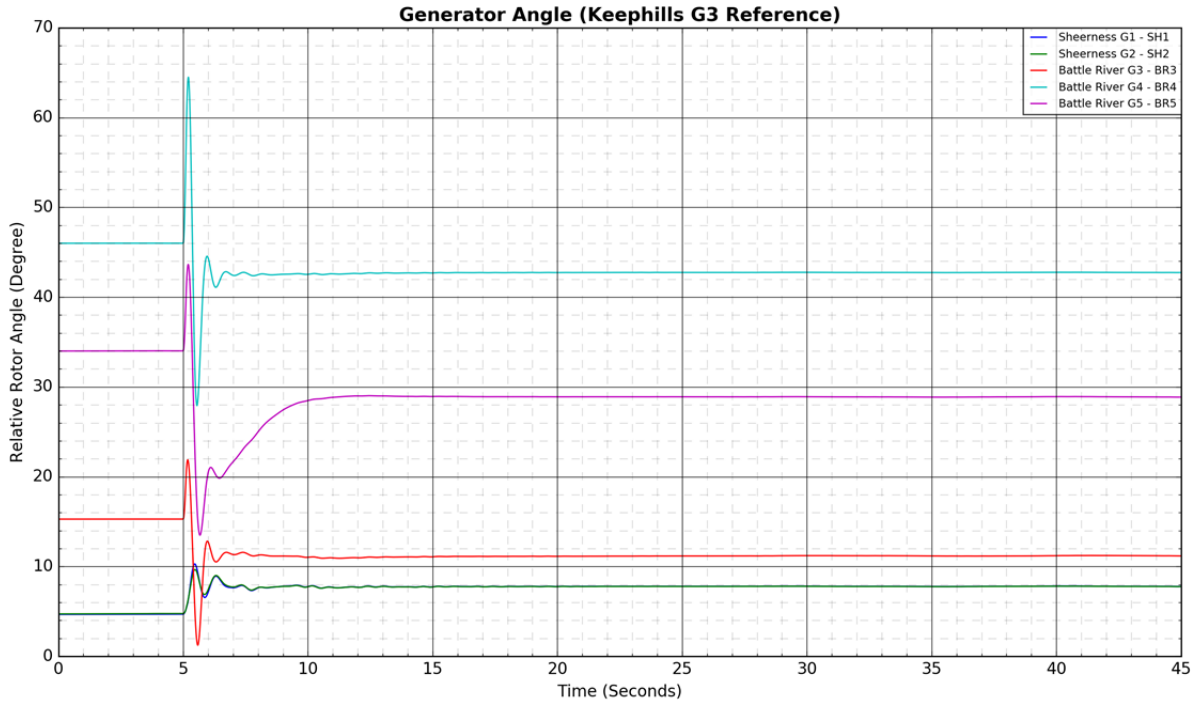
Generator Angle (Keephills G3 Reference)
Relative Rotor Angle (Degree)
Time (Seconds)
Sheerness G1 - SH1
Sheerness G2 - SH2
Battle River G3 - BR3
Battle River G4 - BR4
Battle River G5 - BR5

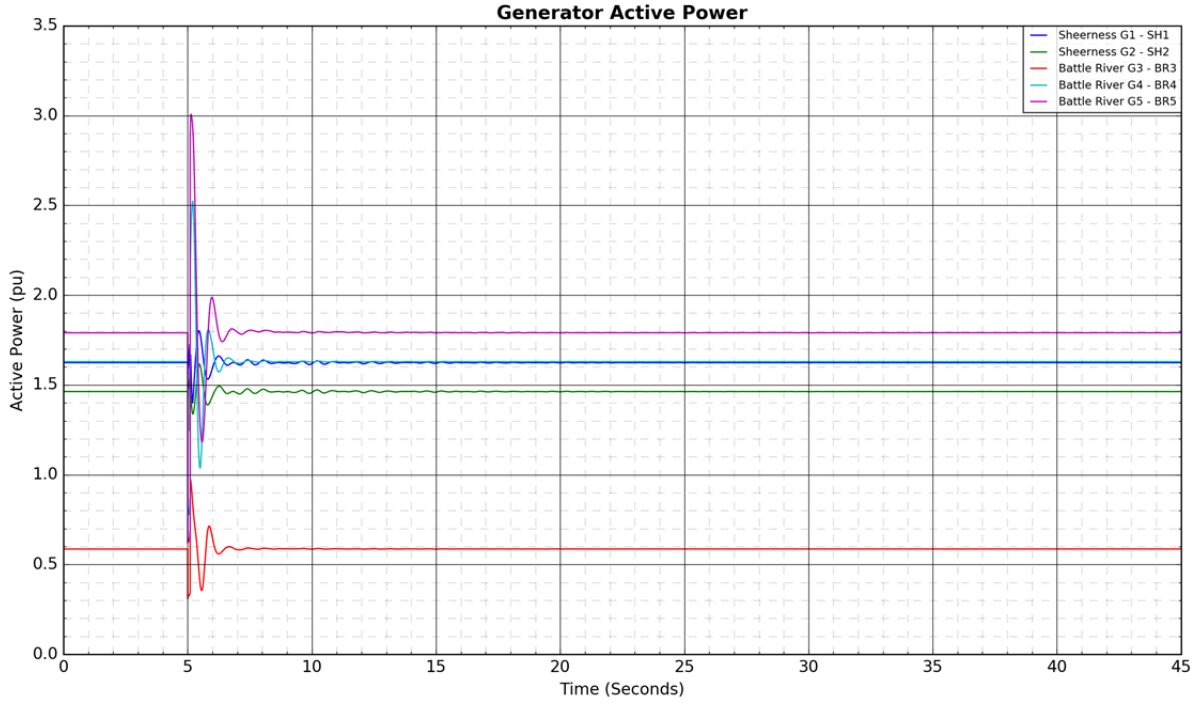
Generator Active Power
Active Power (pu)
Time (Seconds)
Sheerness G1 - SH1
Sheerness G2 - SH2
Battle River G3 - BR3
Battle River G4 - BR4
Battle River G5 - BR5

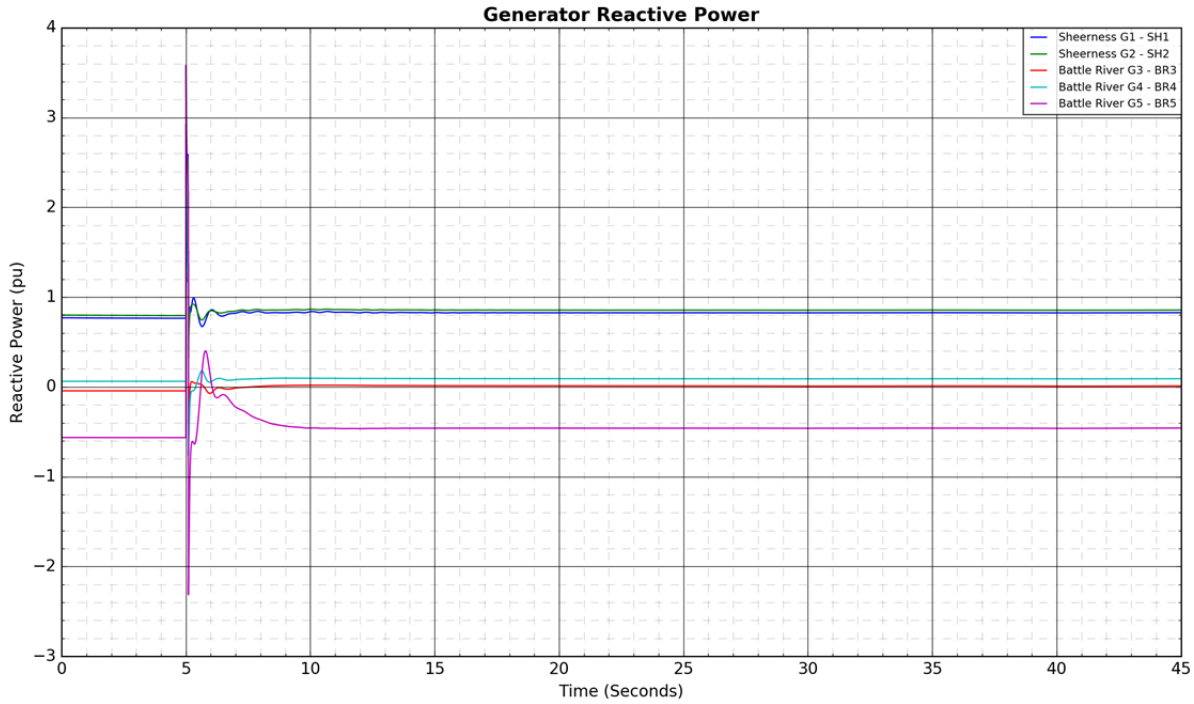
Generator Reactive Power
Sheerness G1 - SH1
Sheerness G2 - SH2
Battle River G3 - BR3
Battle River G4 - BR4
Battle River G5 - BR5
Reactive Power (pu)
Time (Seconds)

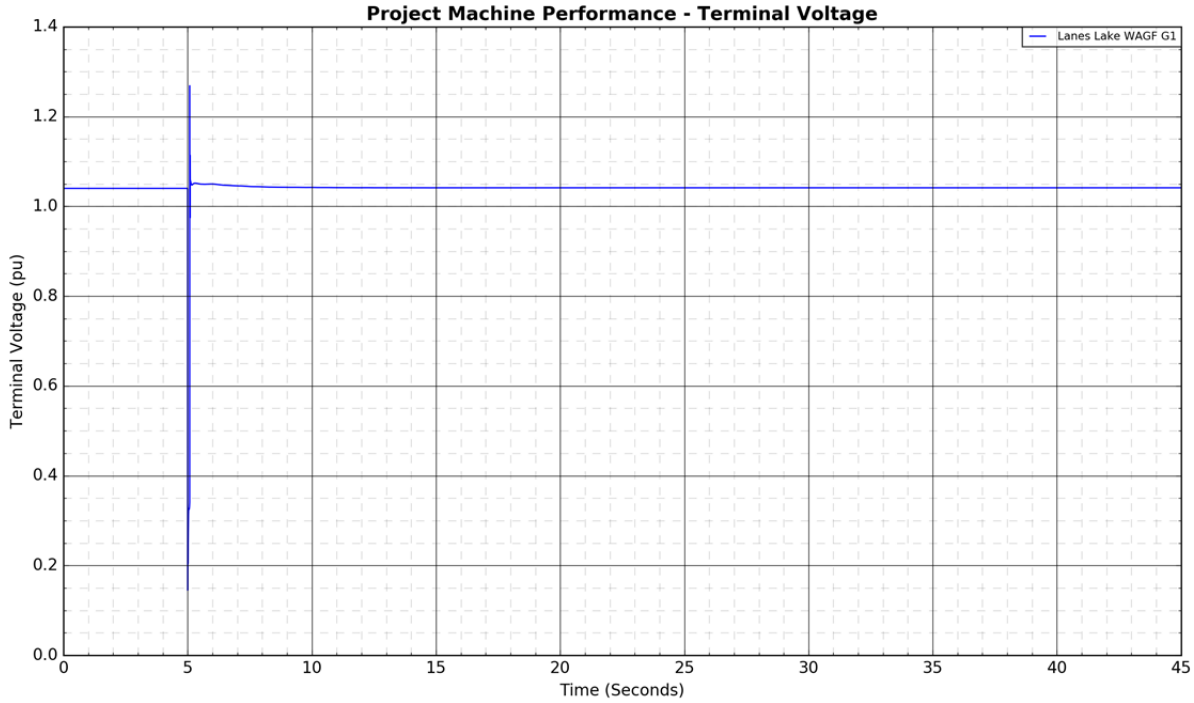
Project Machine Performance - Terminal Voltage
Lanes Lake WAGF G1
Terminal Voltage (pu)
Time (Seconds)


Project Machine Performance - Active Power
Lanes Lake WAGF G1
Active Power (pu)
Time (Seconds)
0.0
0.5
1.0
1.5
2.0
0
5
10
15
20
25
30
35
40
45

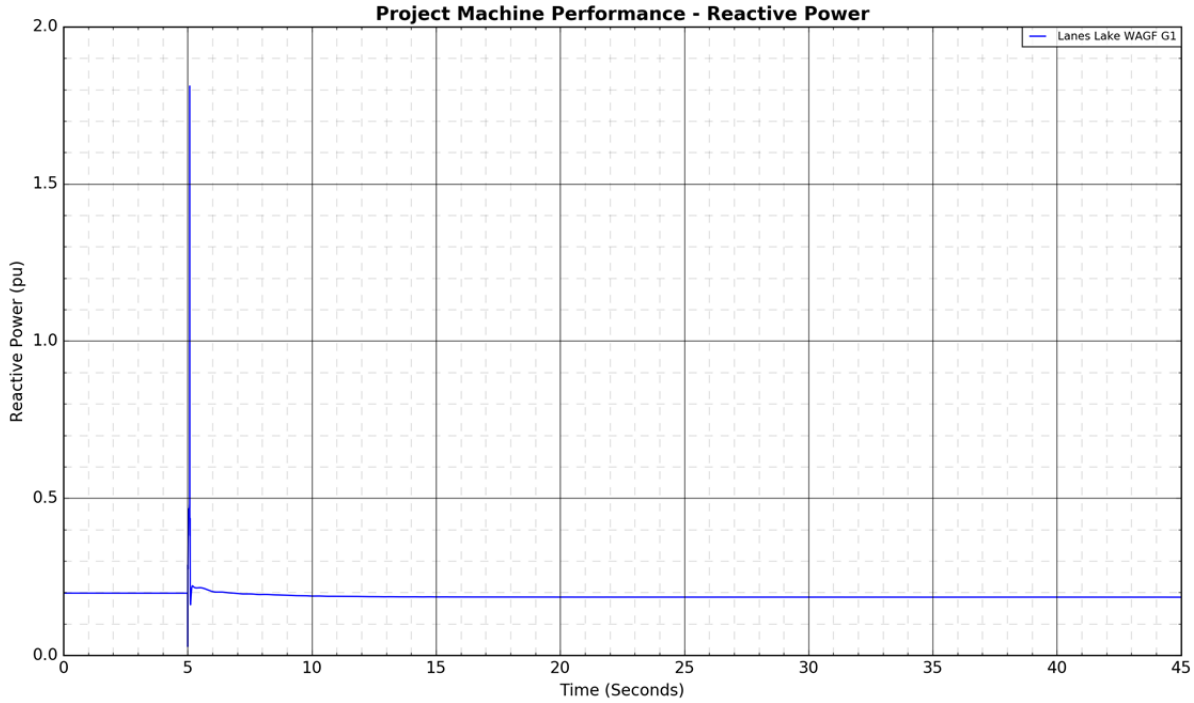
Project Machine Performance - Reactive Power
Lanes Lake WAGF G1
Reactive Power (pu)
Time (Seconds)
0.0
0.5
1.0
1.5
2.0
0
5
10
15
20
25
30
35
40
45

Figure A4-9: 9L59 (Anderson 801S - Tinchebray 972S): 3-phase fault at Anderson 801S

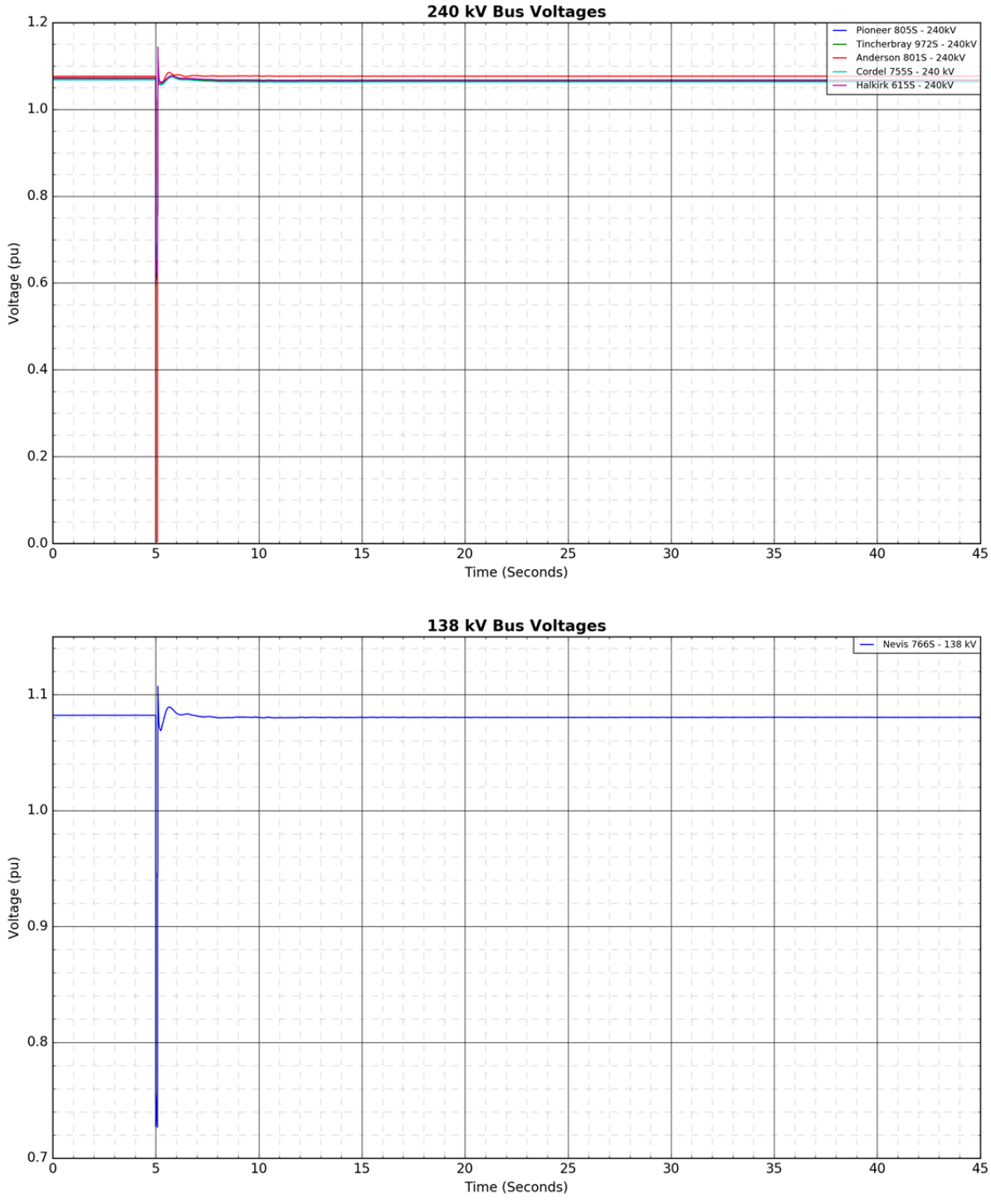

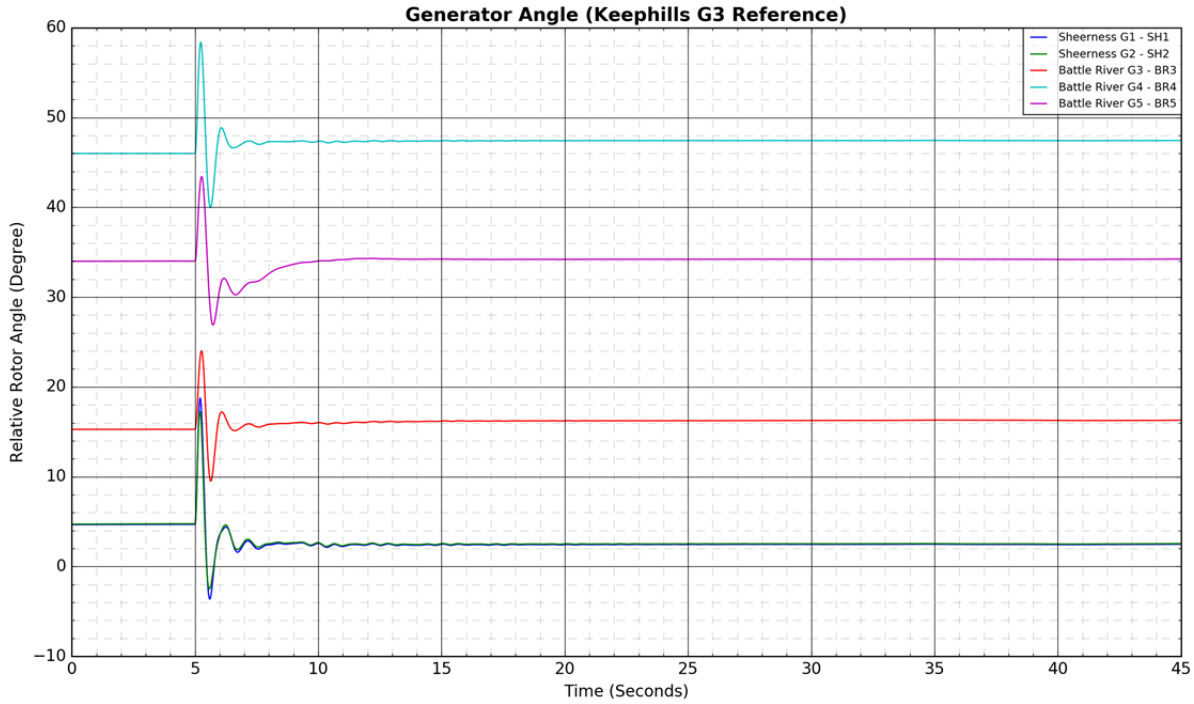
Generator Angle (Keephills G3 Reference)
Relative Rotor Angle (Degree)
Time (Seconds)
Sheerness G1 - SH1
Sheerness G2 - SH2
Battle River G3 - BR3
Battle River G4 - BR4
Battle River G5 - BR5

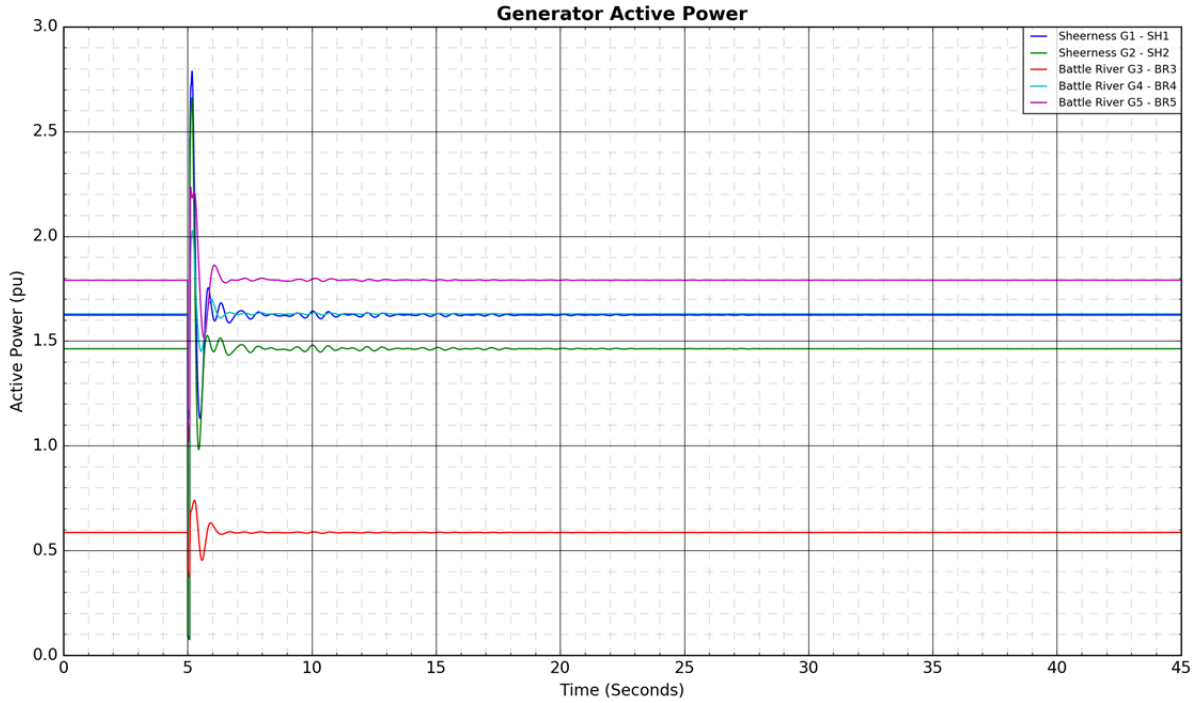
Generator Active Power
Active Power (pu)
Time (Seconds)
Sheerness G1 - SH1
Sheerness G2 - SH2
Battle River G3 - BR3
Battle River G4 - BR4
Battle River G5 - BR5

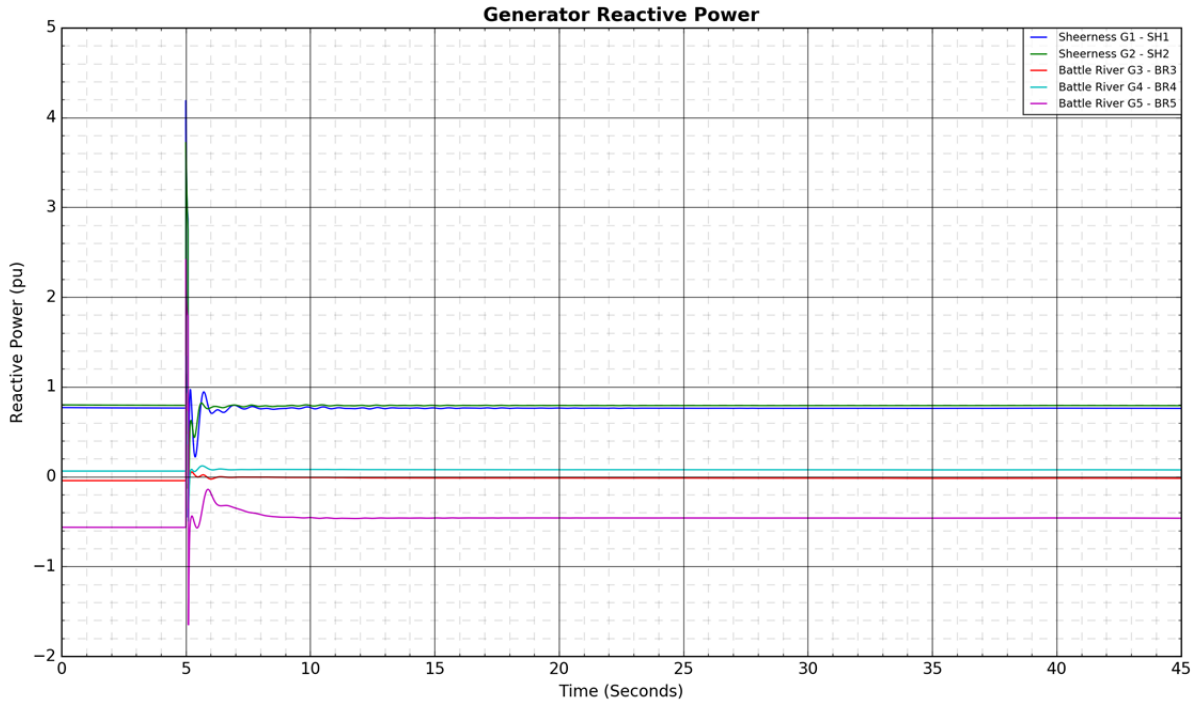
Generator Reactive Power
Sheerness G1 - SH1
Sheerness G2 - SH2
Battle River G3 - BR3
Battle River G4 - BR4
Battle River G5 - BR5
Reactive Power (pu)
Time (Seconds)

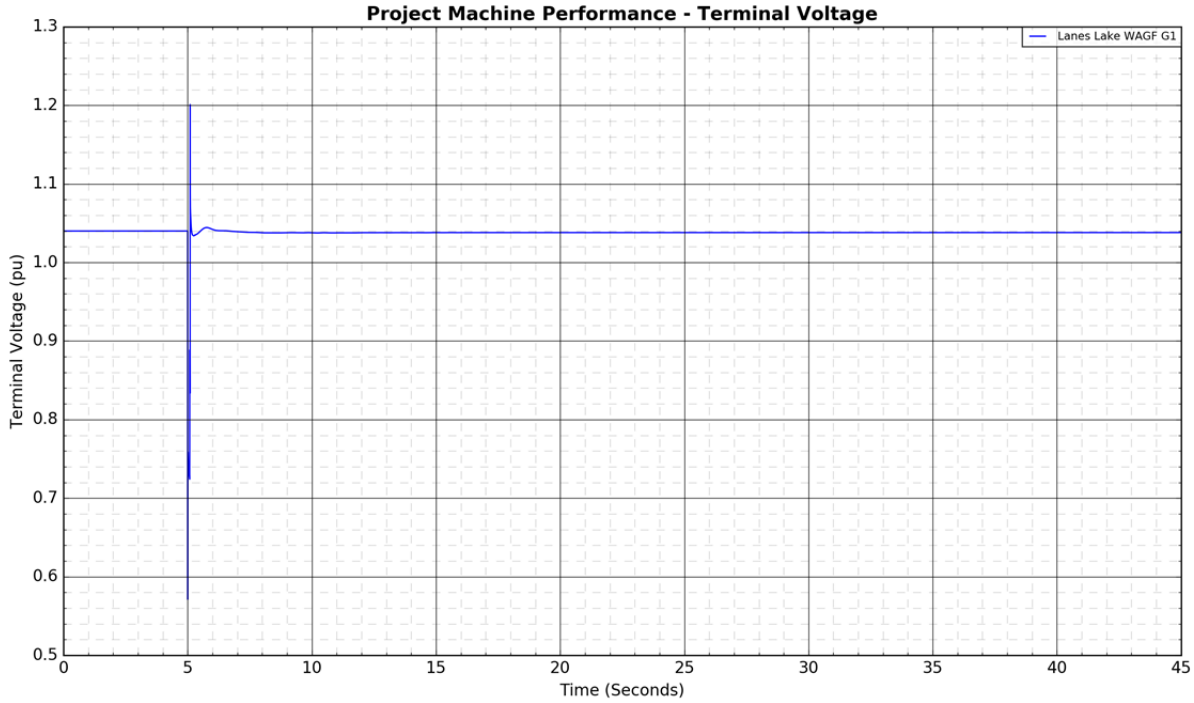
Project Machine Performance - Terminal Voltage
Lanes Lake WAGF G1
Terminal Voltage (pu)
Time (Seconds)


Project Machine Performance - Active Power
Lanes Lake WAGF G1
Active Power (pu)
Time (Seconds)
2.2
2.0
1.8
1.6
1.4
1.2
1.0
0.8
0
5
10
15
20
25
30
35
40
45

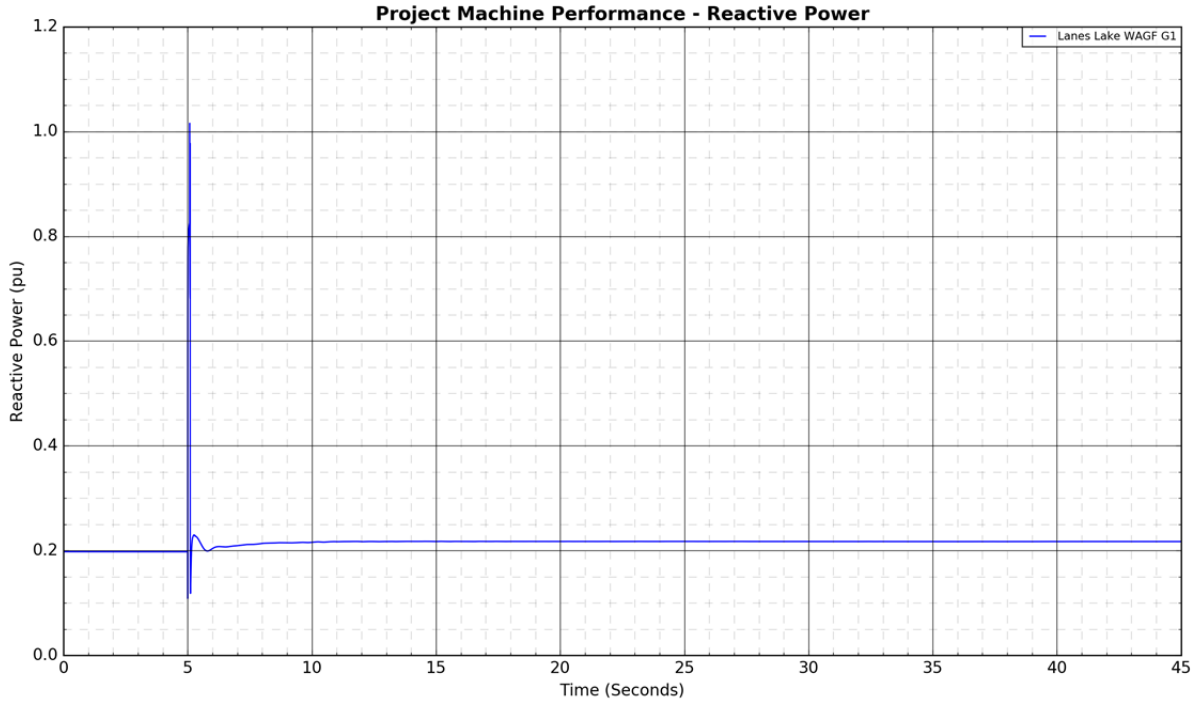
Project Machine Performance - Reactive Power
Lanes Lake WAGF G1
Reactive Power (pu)
Time (Seconds)
1.2
1.0
0.8
0.6
0.4
0.2
0.0
0
5
10
15
20
25
30
35
40
45


Branch Active Power Flows
9L93 (Pioneer 805S - Halkirk 615S)
9L175 (Pioneer 805S - Tincherbray 972S)
9L16 (Tincherbray 972S - Cordel 755S)
Active Power (MW)
Time (Seconds)

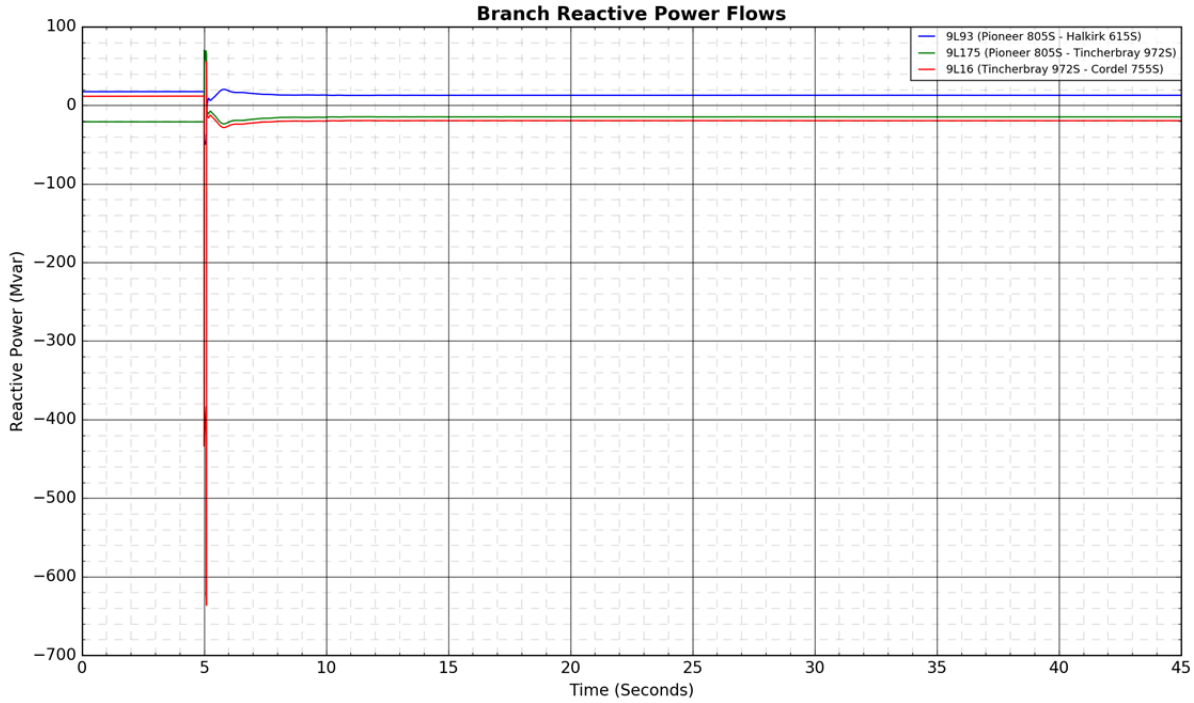
Branch Reactive Power Flows
9L93 (Pioneer 805S - Halkirk 615S)
9L175 (Pioneer 805S - Tincherbray 972S)
9L16 (Tincherbray 972S - Cordel 755S)
Reactive Power (Mvar)
Time (Seconds)

Figure A4-10: 9L59 (Anderson 801S - Tinchebray 972S): 3-phase fault at Tinchebray 972S

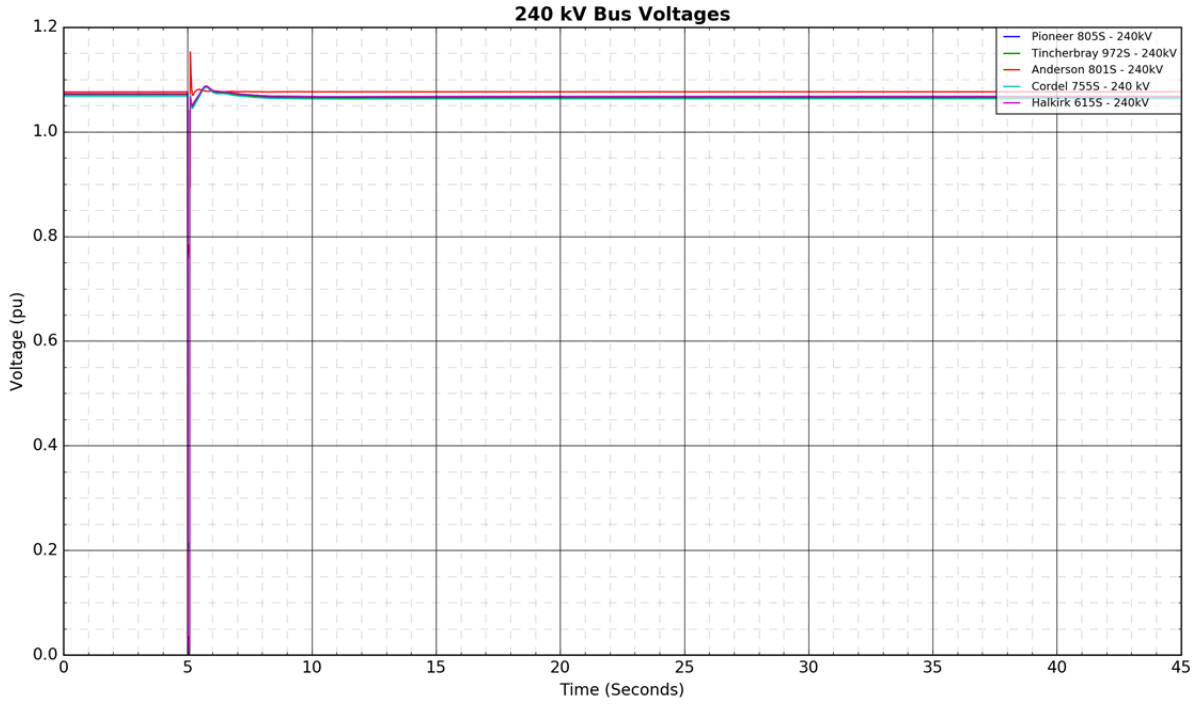

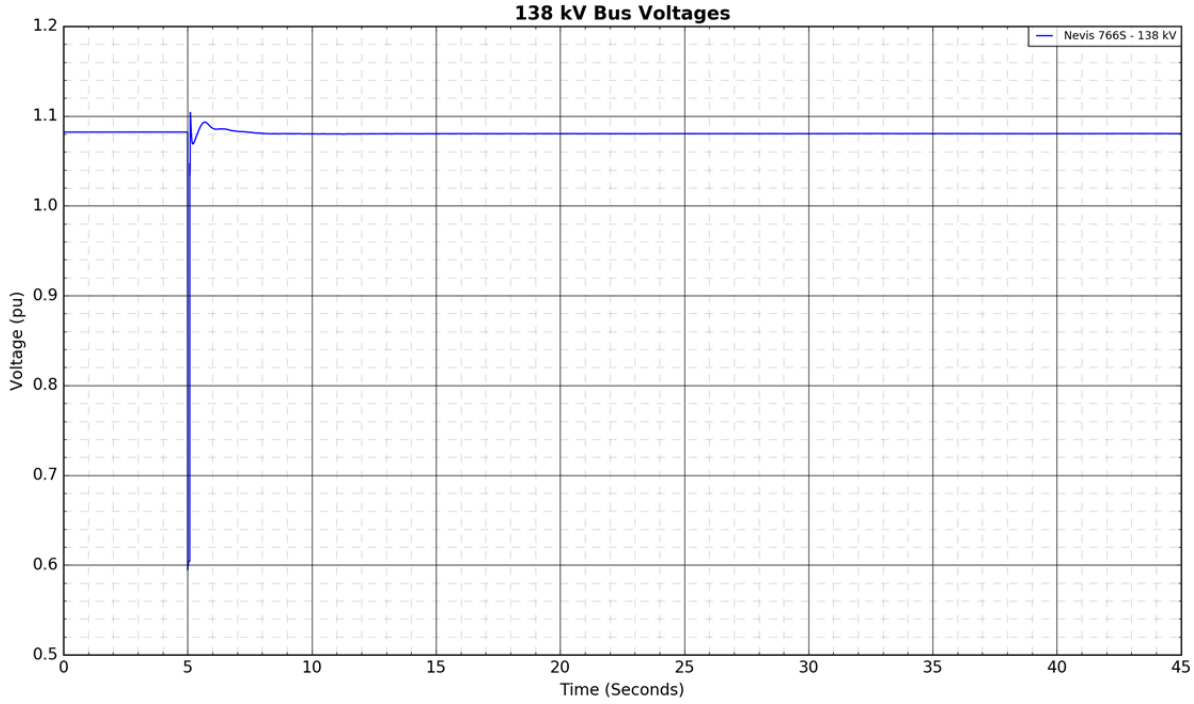

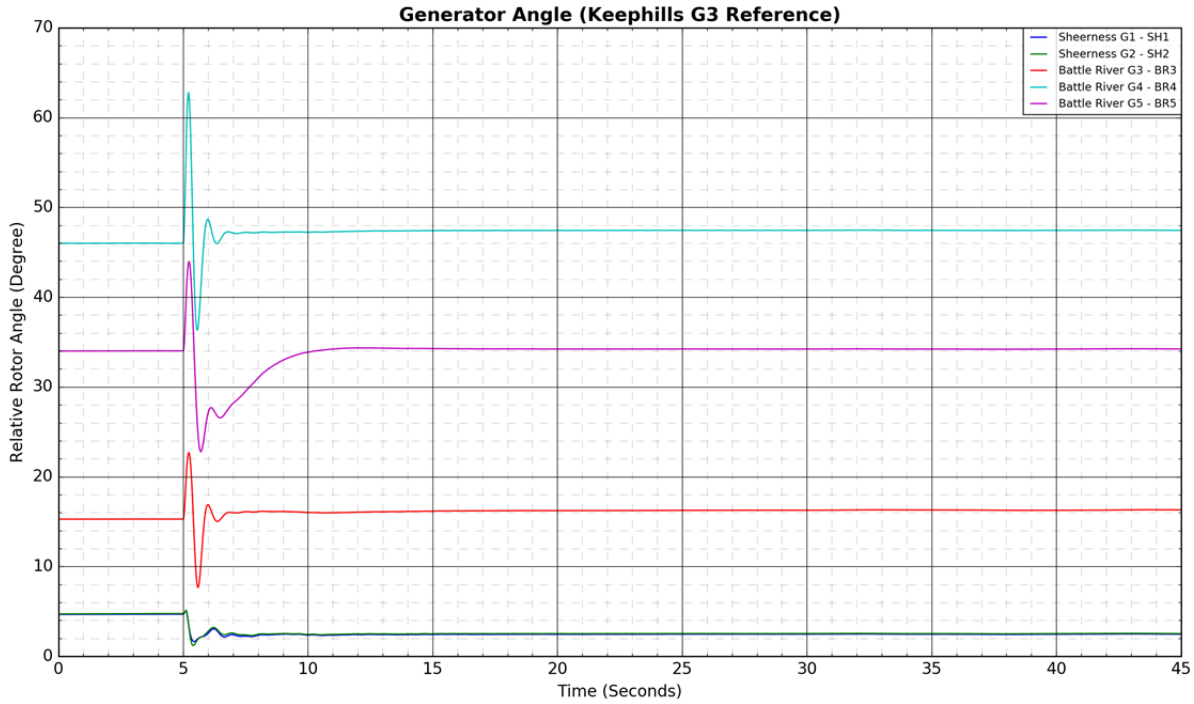
Generator Angle (Keephills G3 Reference)
Relative Rotor Angle (Degree)
Time (Seconds)
Sheerness G1 - SH1
Sheerness G2 - SH2
Battle River G3 - BR3
Battle River G4 - BR4
Battle River G5 - BR5
0
10
20
30
40
50
60
70
0
5
10
15
20
25
30
35
40
45

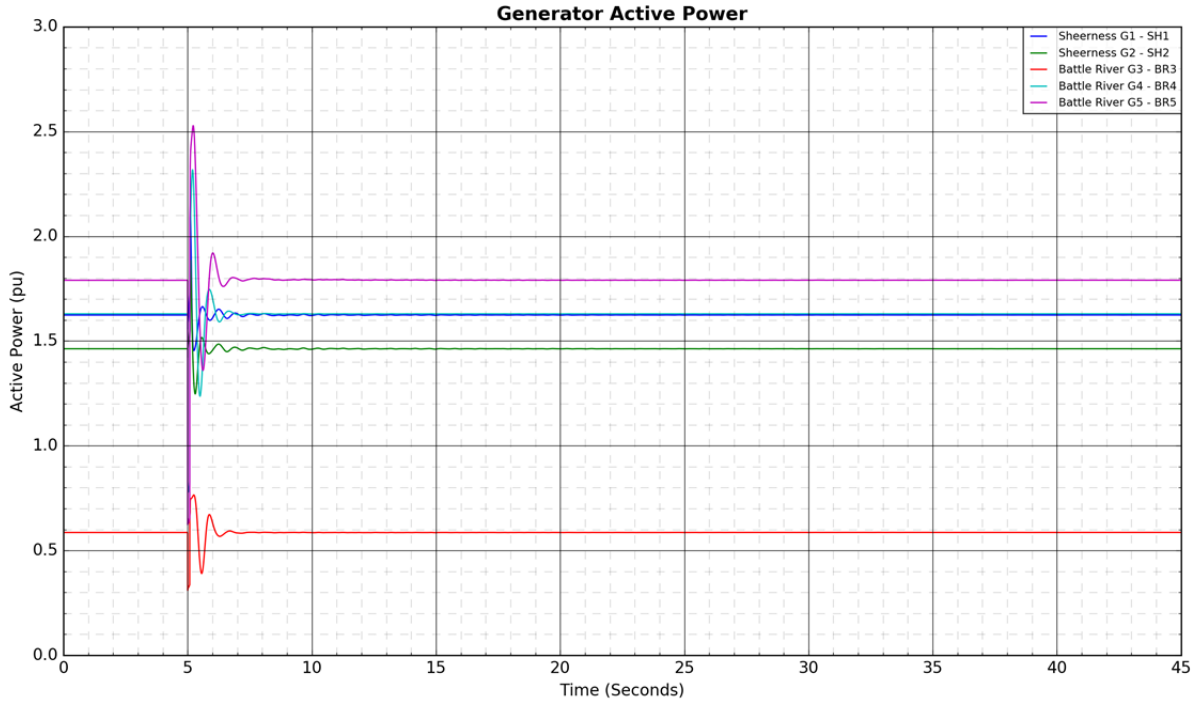
Generator Active Power
Active Power (pu)
Time (Seconds)
Sheerness G1 - SH1
Sheerness G2 - SH2
Battle River G3 - BR3
Battle River G4 - BR4
Battle River G5 - BR5
0.0
0.5
1.0
1.5
2.0
2.5
3.0
0
5
10
15
20
25
30
35
40
45

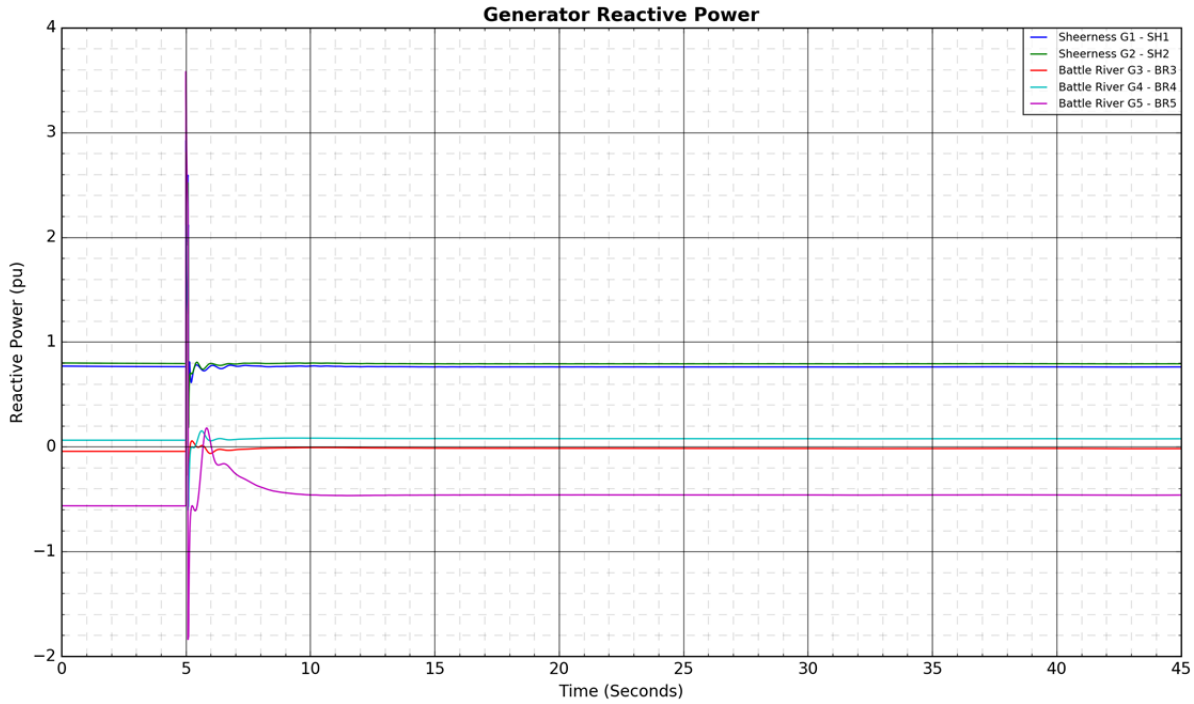
Generator Reactive Power
Sheerness G1 - SH1
Sheerness G2 - SH2
Battle River G3 - BR3
Battle River G4 - BR4
Battle River G5 - BR5
Reactive Power (pu)
Time (Seconds)

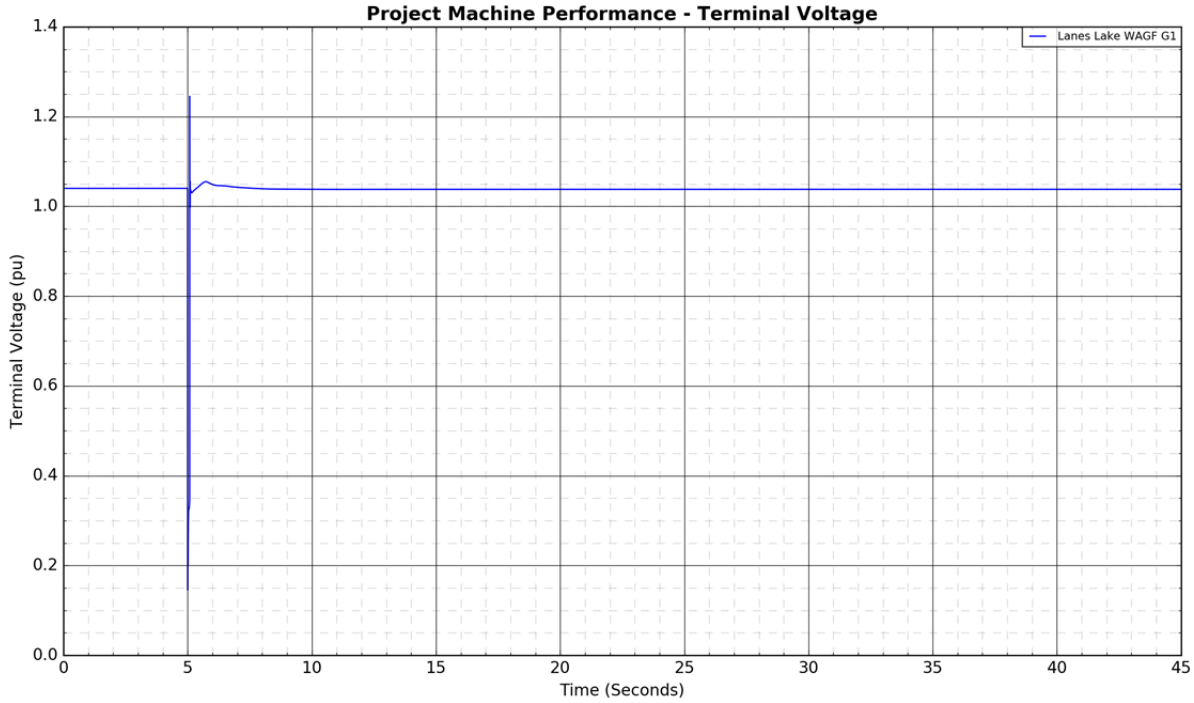
Project Machine Performance - Terminal Voltage
Lanes Lake WAGF G1
Terminal Voltage (pu)
Time (Seconds)


Project Machine Performance - Active Power
Lanes Lake WAGF G1
Active Power (pu)
Time (Seconds)
2.0
1.5
1.0
0.5
0.0
0
5
10
15
20
25
30
35
40
45

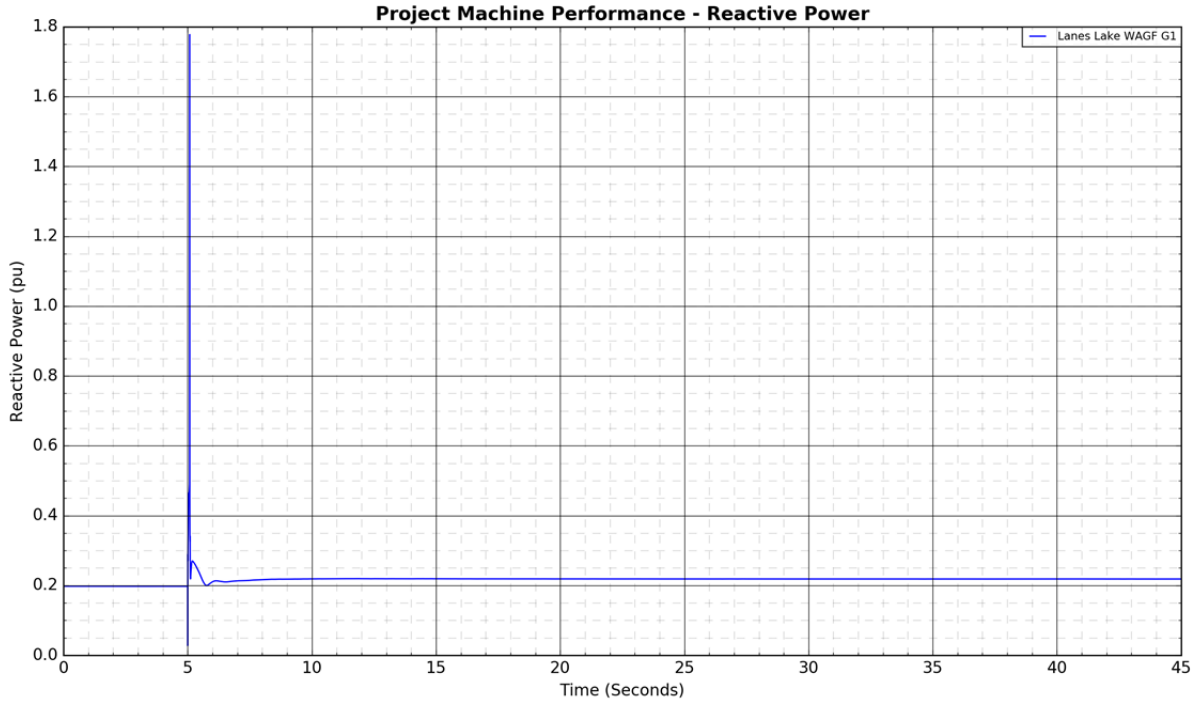
Project Machine Performance - Reactive Power
Lanes Lake WAGF G1
Reactive Power (pu)
Time (Seconds)
1.8
1.6
1.4
1.2
1.0
0.8
0.6
0.4
0.2
0.0
0
5
10
15
20
25
30
35
40
45

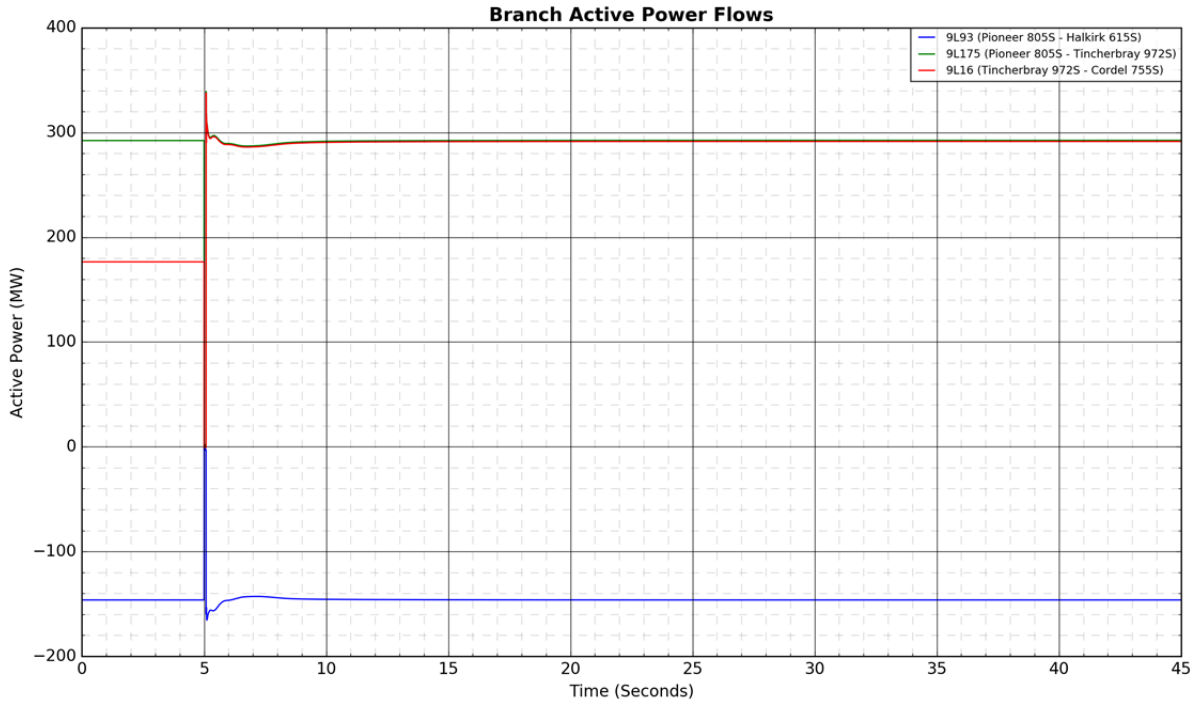
Branch Active Power Flows
9L93 (Pioneer 805S - Halkirk 615S)
9L175 (Pioneer 805S - Tincherbray 972S)
9L16 (Tincherbray 972S - Cordel 755S)
Active Power (MW)
Time (Seconds)

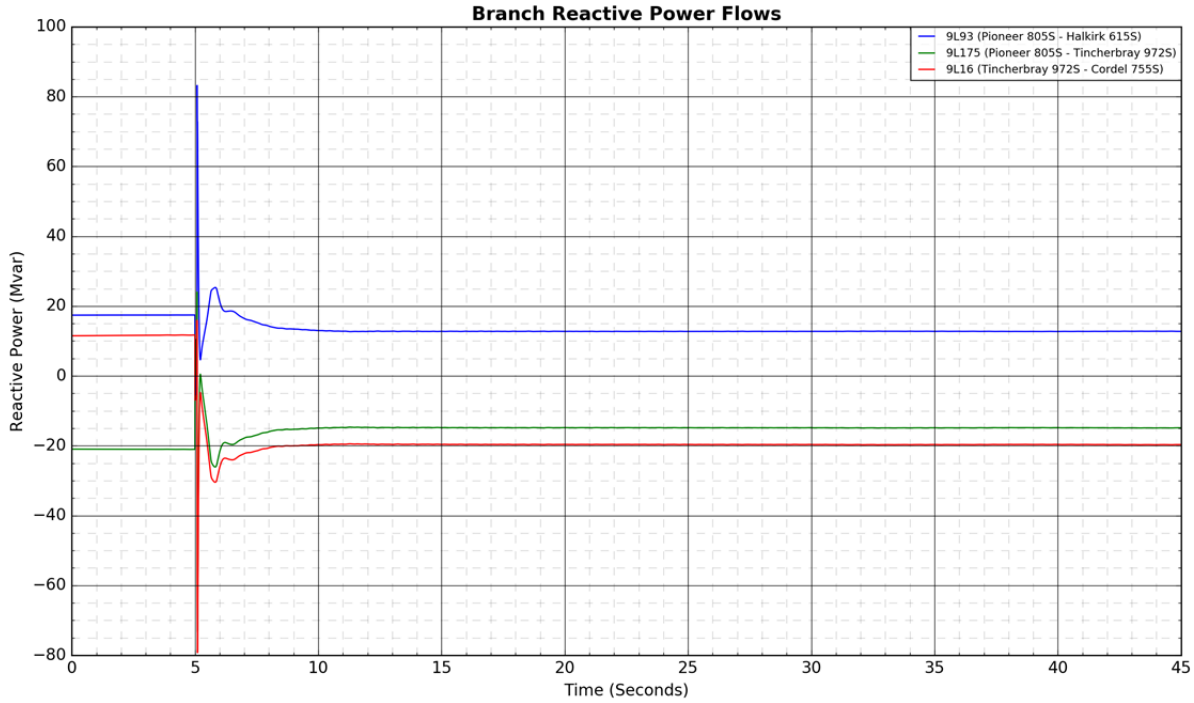
Branch Reactive Power Flows
9L93 (Pioneer 805S - Halkirk 615S)
9L175 (Pioneer 805S - Tincherbray 972S)
9L16 (Tincherbray 972S - Cordel 755S)
Reactive Power (Mvar)
Time (Seconds)

Figure A4-11: 9L966 (Pemukan 932S - Hansman Lake 650S): 3-phase fault at Pemukan 932S

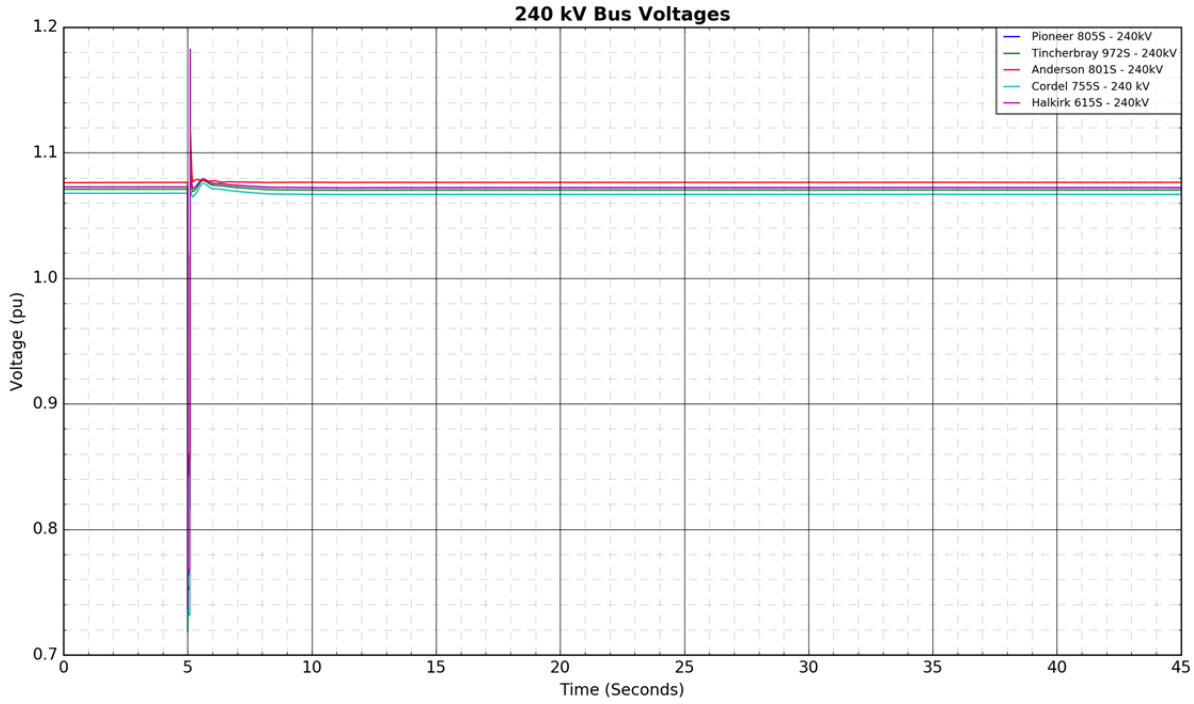

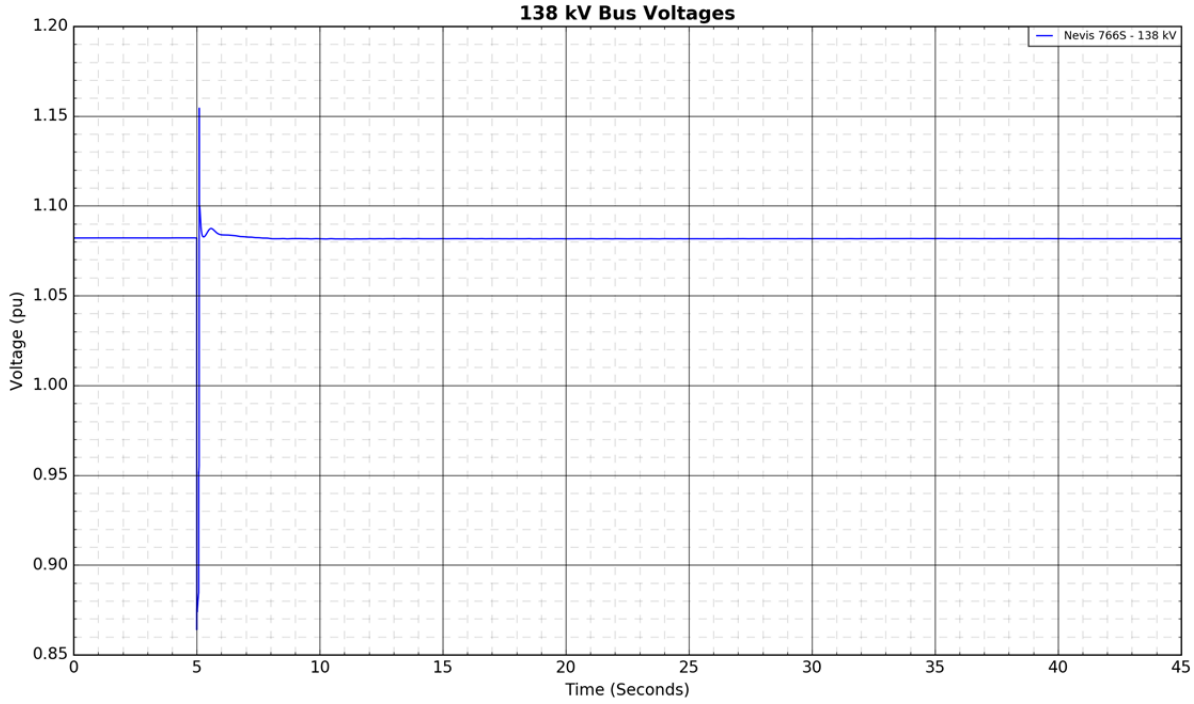

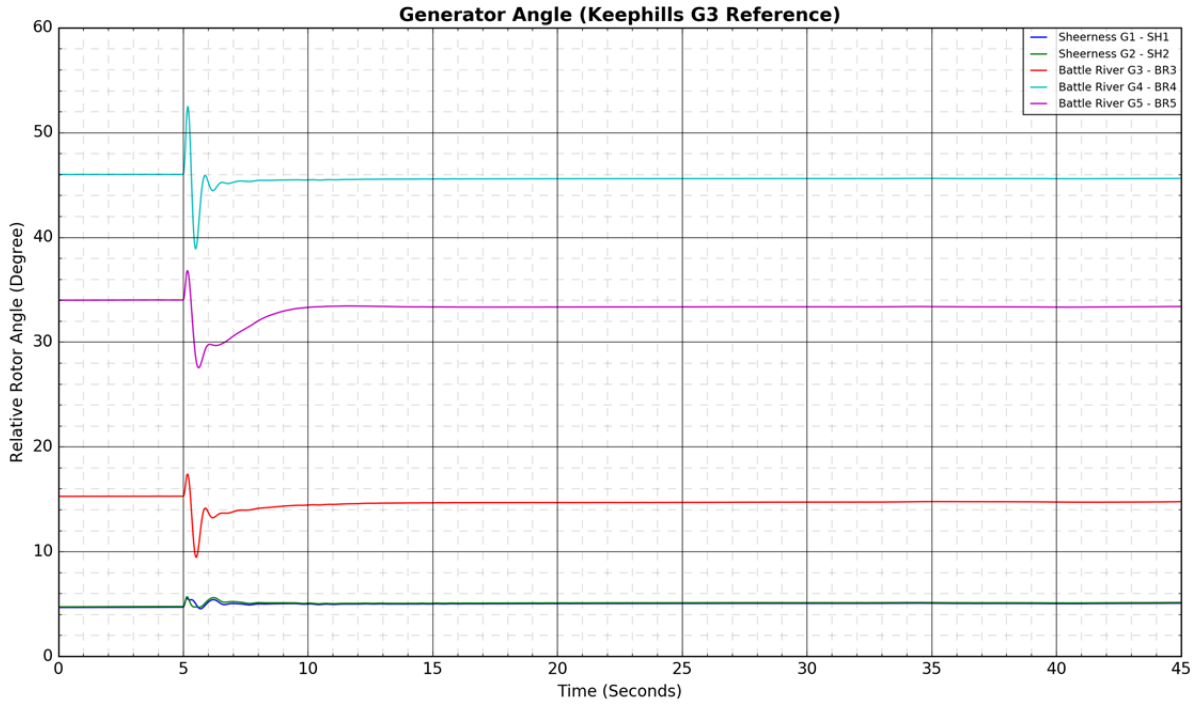
Generator Angle (Keephills G3 Reference)
Relative Rotor Angle (Degree)
Time (Seconds)
Sheerness G1 - SH1
Sheerness G2 - SH2
Battle River G3 - BR3
Battle River G4 - BR4
Battle River G5 - BR5
0
10
20
30
40
50
60
0
5
10
15
20
25
30
35
40
45

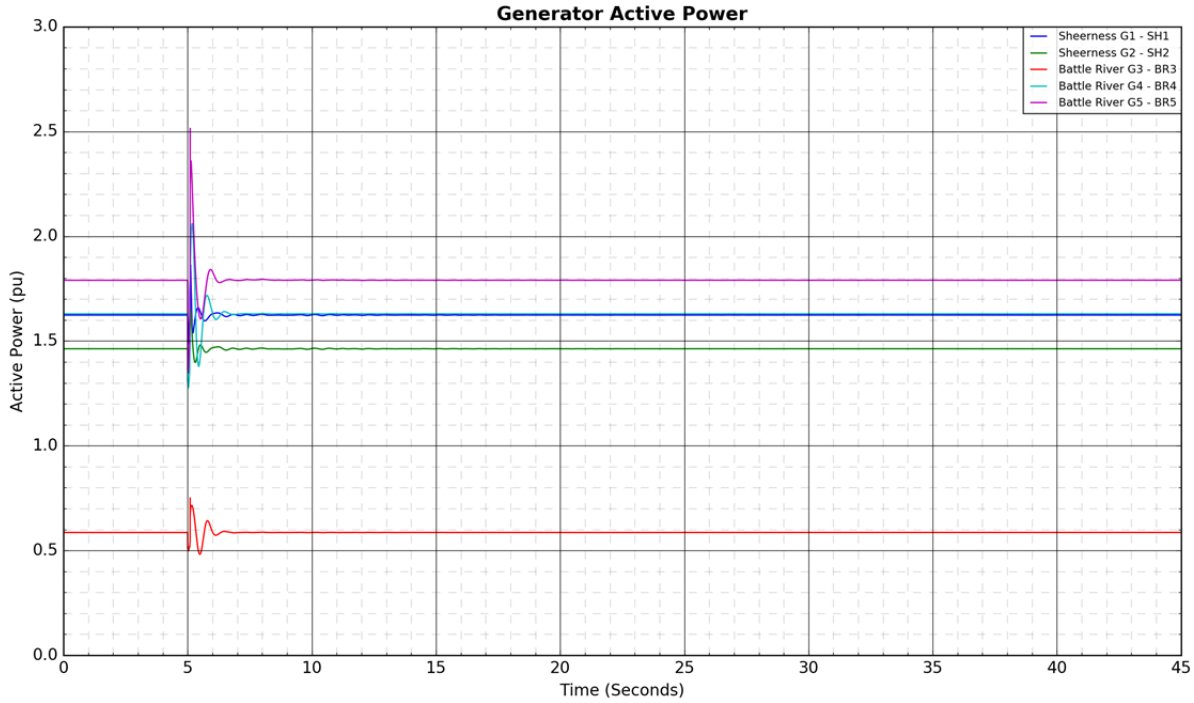
Generator Active Power
Active Power (pu)
Time (Seconds)
Sheerness G1 - SH1
Sheerness G2 - SH2
Battle River G3 - BR3
Battle River G4 - BR4
Battle River G5 - BR5
0.0
0.5
1.0
1.5
2.0
2.5
3.0
0
5
10
15
20
25
30
35
40
45

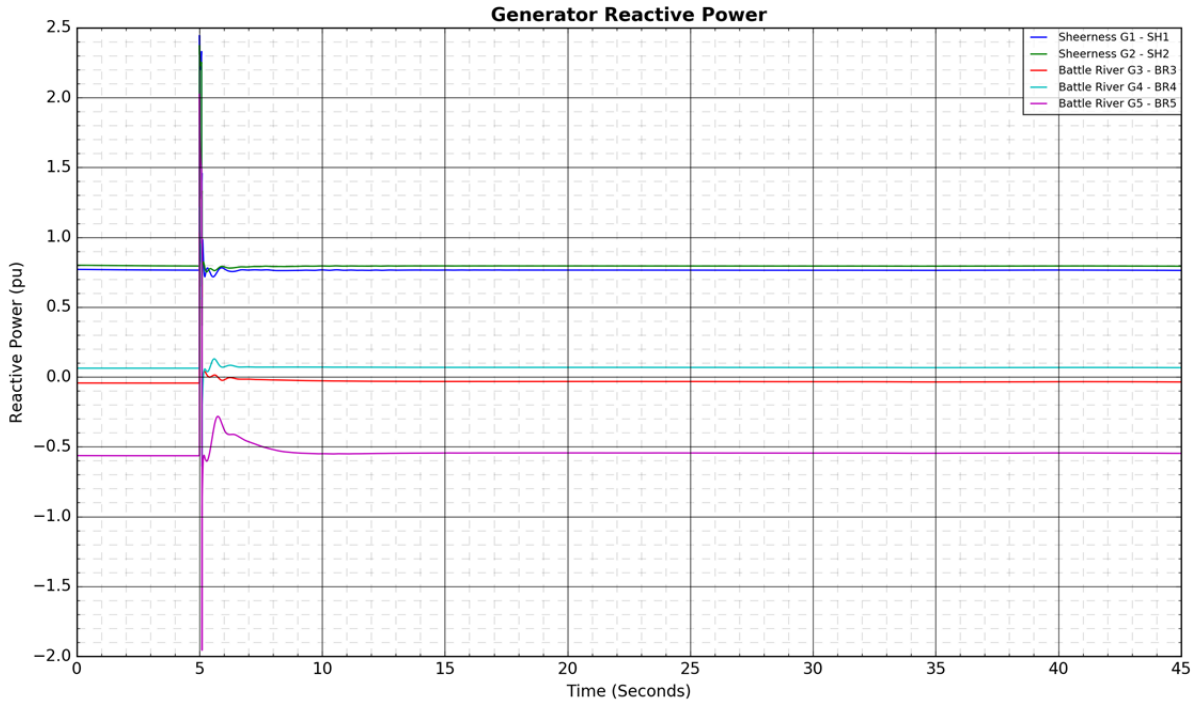
Generator Reactive Power
Sheerness G1 - SH1
Sheerness G2 - SH2
Battle River G3 - BR3
Battle River G4 - BR4
Battle River G5 - BR5
Reactive Power (pu)
Time (Seconds)

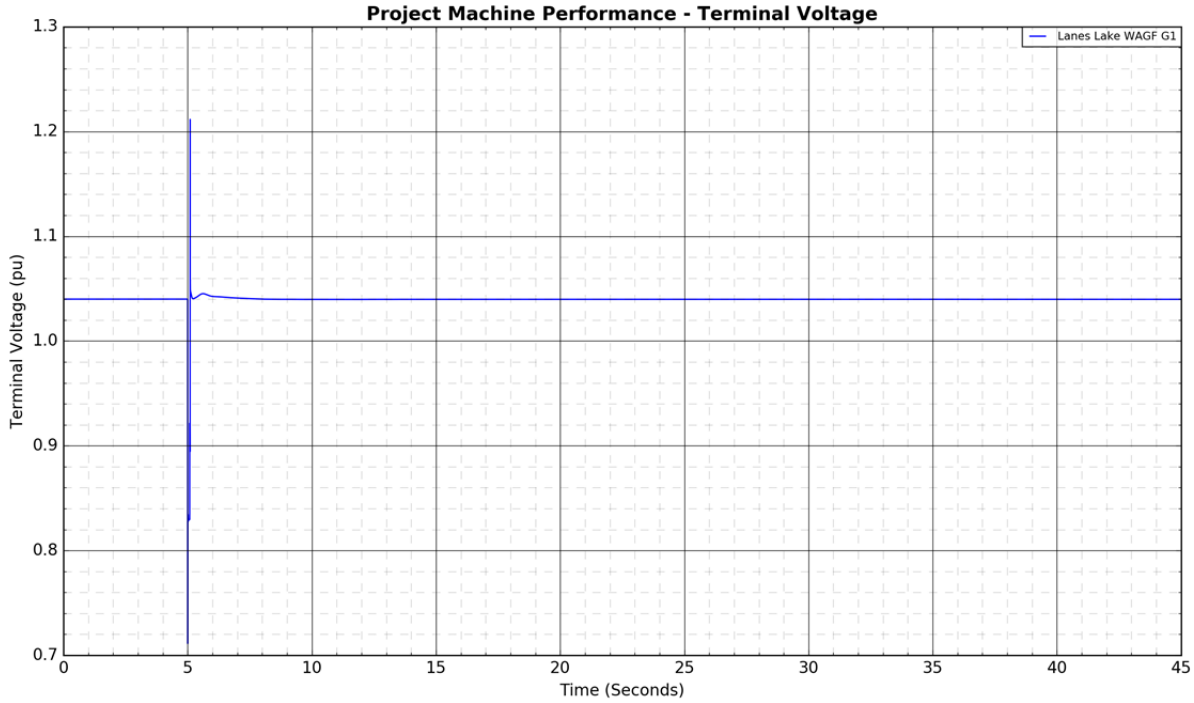
Project Machine Performance - Terminal Voltage
Lanes Lake WAGF G1
Terminal Voltage (pu)
Time (Seconds)


Project Machine Performance - Active Power
Lanes Lake WAGF G1
Active Power (pu)
Time (Seconds)
2.2
2.0
1.8
1.6
1.4
1.2
1.0
0
5
10
15
20
25
30
35
40
45

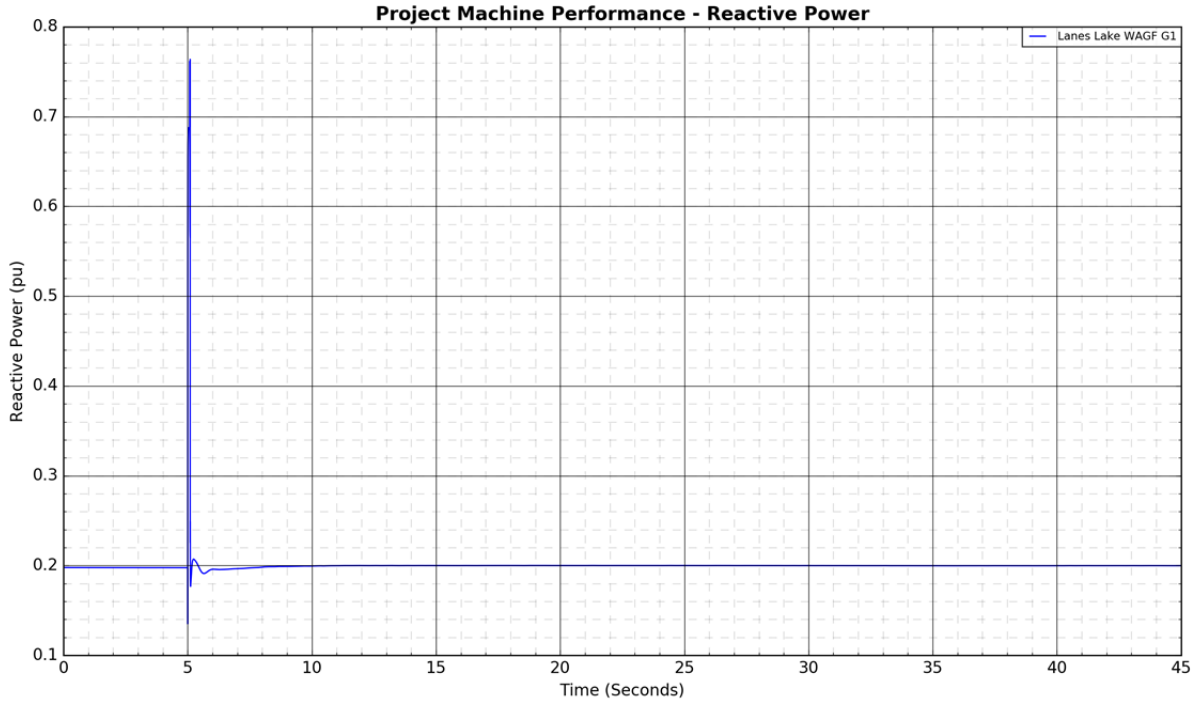
Project Machine Performance - Reactive Power
Lanes Lake WAGF G1
Reactive Power (pu)
Time (Seconds)
0.8
0.7
0.6
0.5
0.4
0.3
0.2
0.1
0
5
10
15
20
25
30
35
40
45


Branch Active Power Flows
9L93 (Pioneer 805S - Halkirk 615S)
9L175 (Pioneer 805S - Tincherbray 972S)
9L16 (Tincherbray 972S - Cordel 755S)
9L59 (Anderson 801S - Tinchebray 972S)
Active Power (MW)
Time (Seconds)

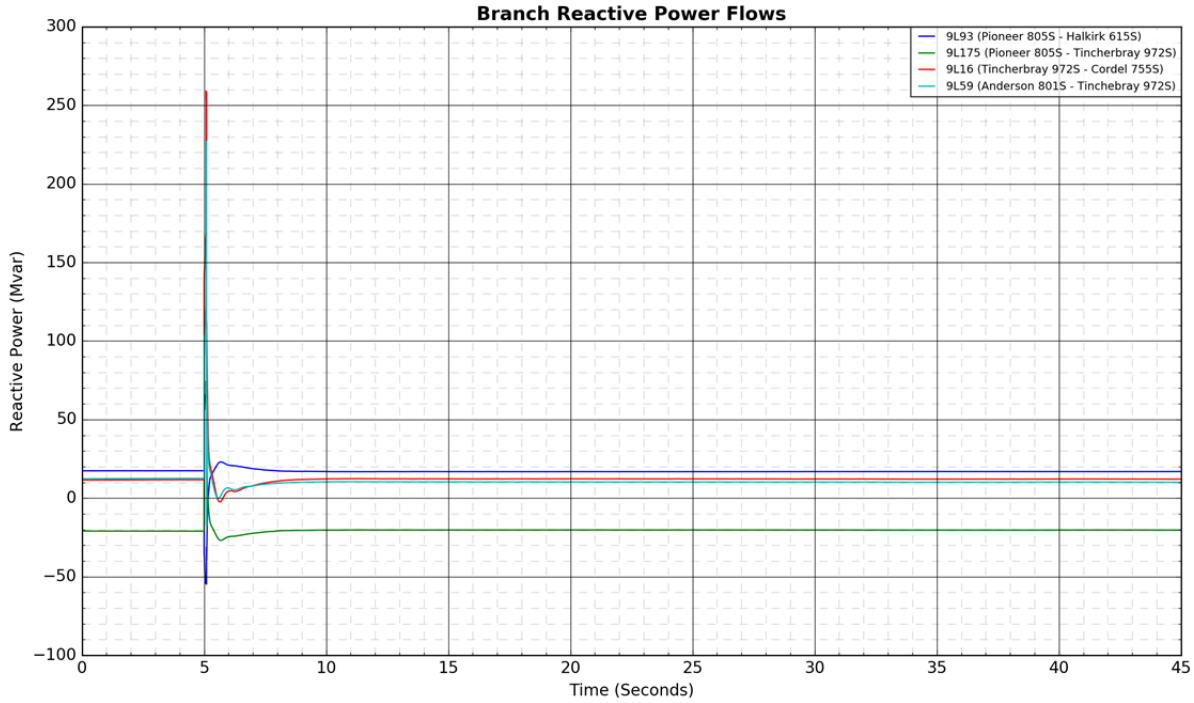
Branch Reactive Power Flows
9L93 (Pioneer 805S - Halkirk 615S)
9L175 (Pioneer 805S - Tincherbray 972S)
9L16 (Tincherbray 972S - Cordel 755S)
9L59 (Anderson 801S - Tinchebray 972S)
Reactive Power (Mvar)
Time (Seconds)

Figure A4-12: 9L966 (Pemukan 932S - Hansman Lake 650S): 3-phase fault at Hansman Lake 650S

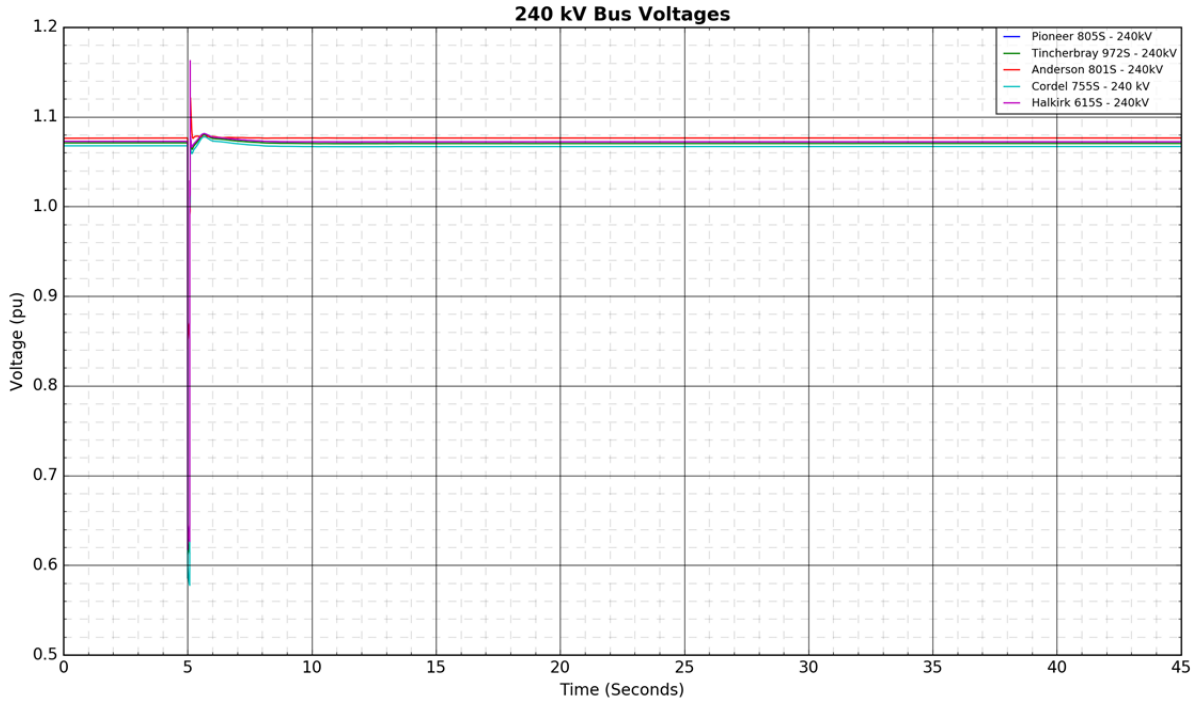

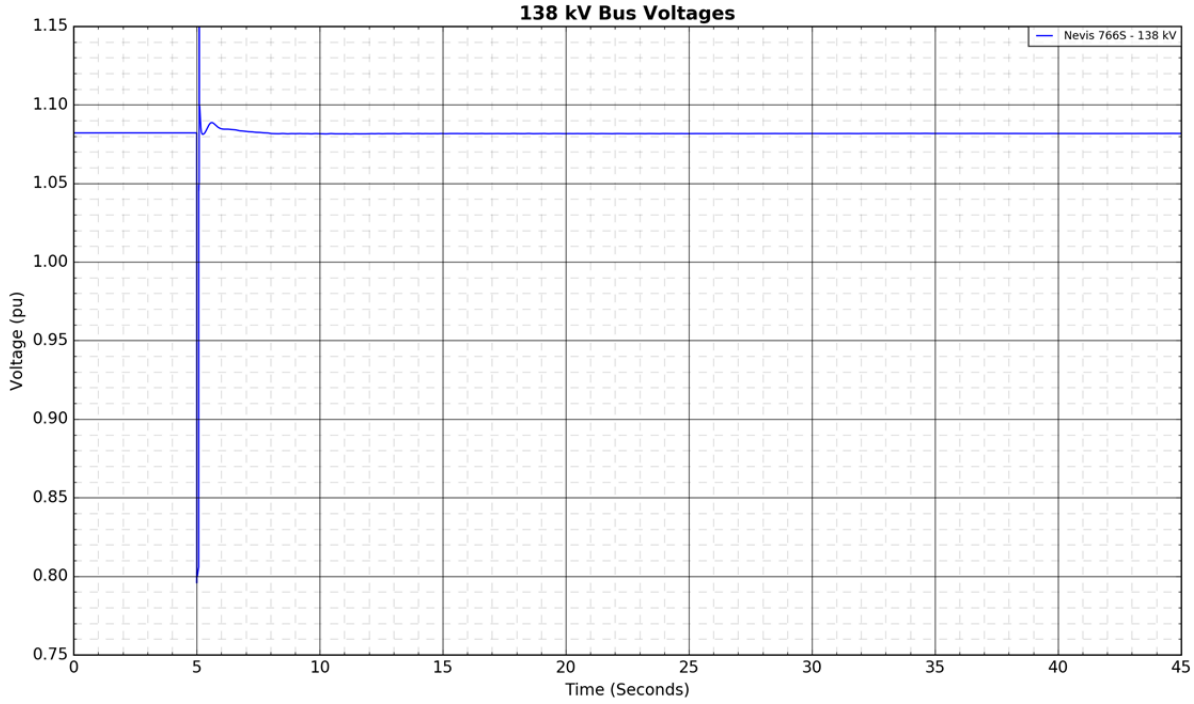

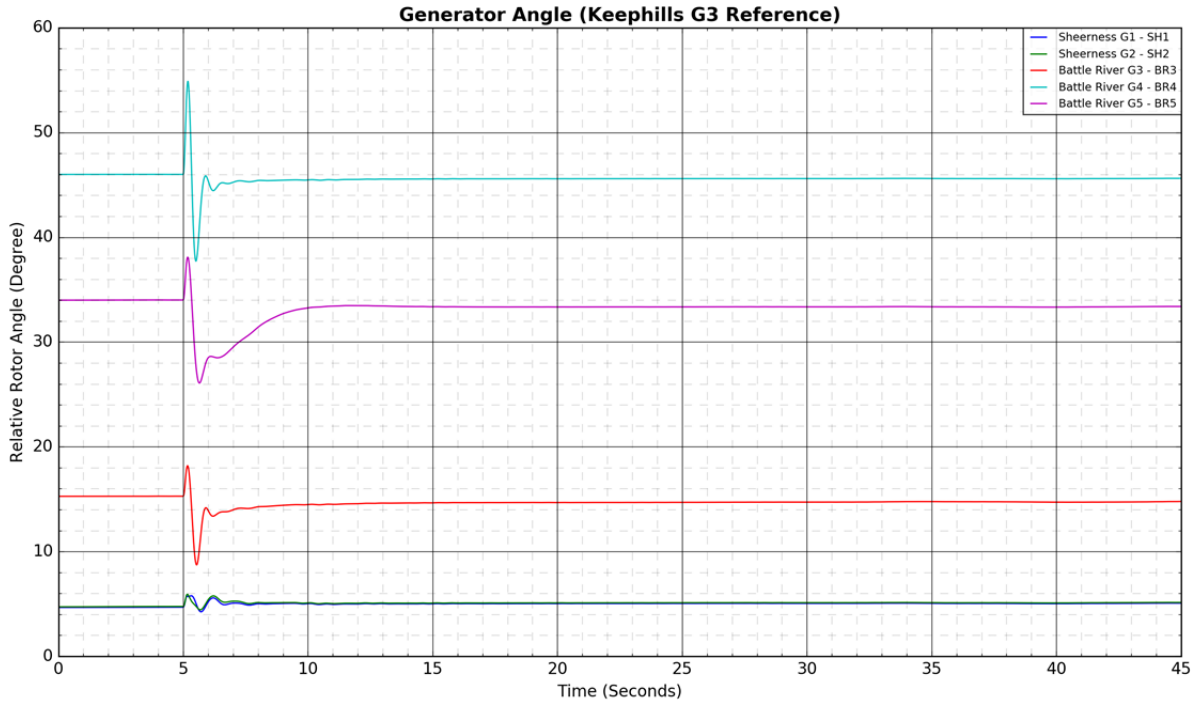
Generator Angle (Keephills G3 Reference)
Relative Rotor Angle (Degree)
Time (Seconds)
Sheerness G1 - SH1
Sheerness G2 - SH2
Battle River G3 - BR3
Battle River G4 - BR4
Battle River G5 - BR5
0
10
20
30
40
50
60
0
5
10
15
20
25
30
35
40
45

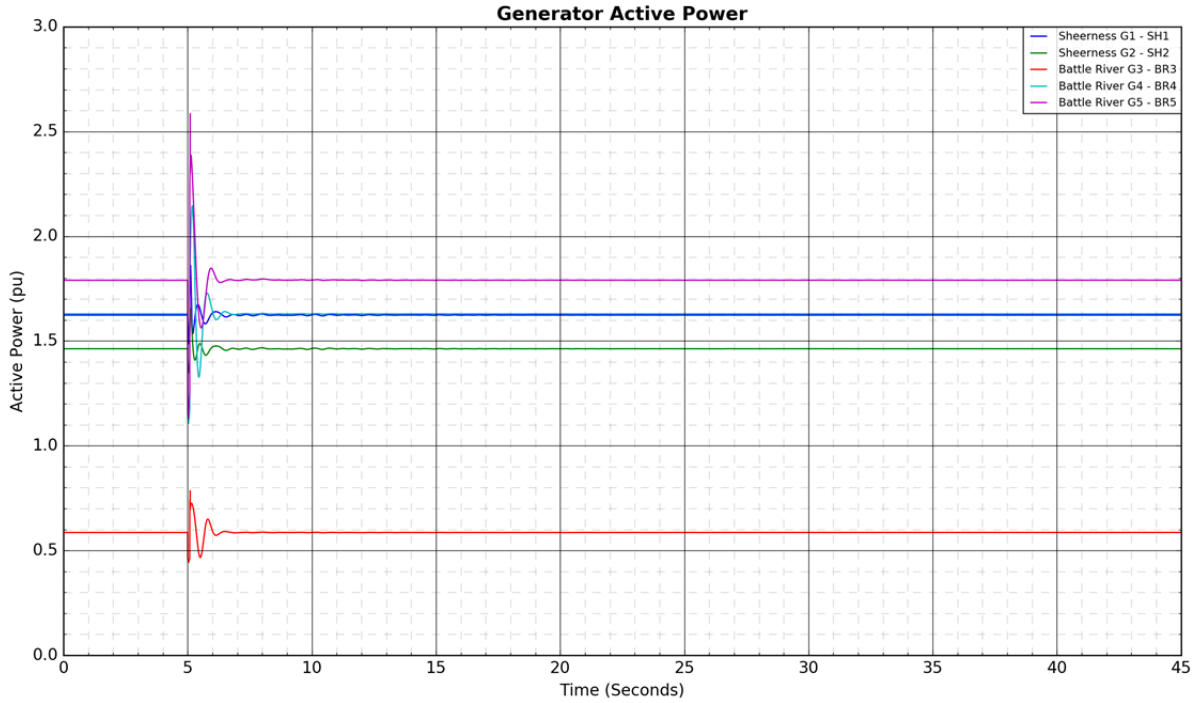
Generator Active Power
Active Power (pu)
Time (Seconds)
Sheerness G1 - SH1
Sheerness G2 - SH2
Battle River G3 - BR3
Battle River G4 - BR4
Battle River G5 - BR5
0.0
0.5
1.0
1.5
2.0
2.5
3.0
0
5
10
15
20
25
30
35
40
45

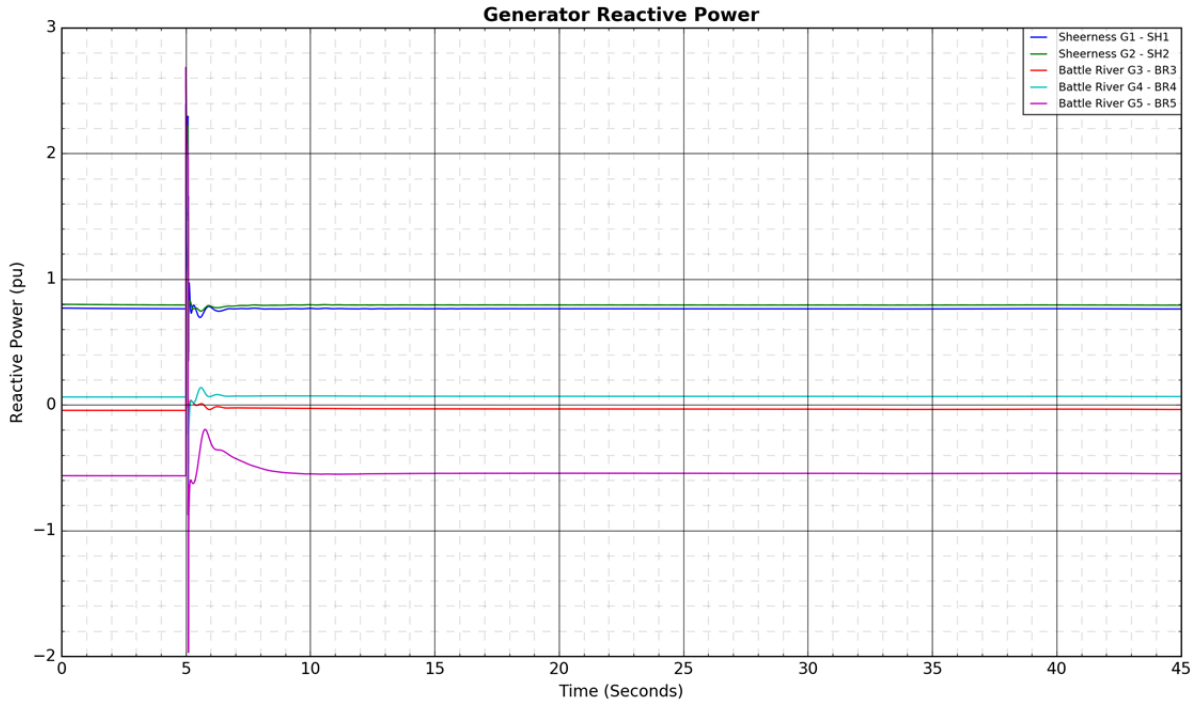
Generator Reactive Power
Sheerness G1 - SH1
Sheerness G2 - SH2
Battle River G3 - BR3
Battle River G4 - BR4
Battle River G5 - BR5
Reactive Power (pu)
Time (Seconds)
3
2
1
0
−1
−2
0
5
10
15
20
25
30
35
40
45

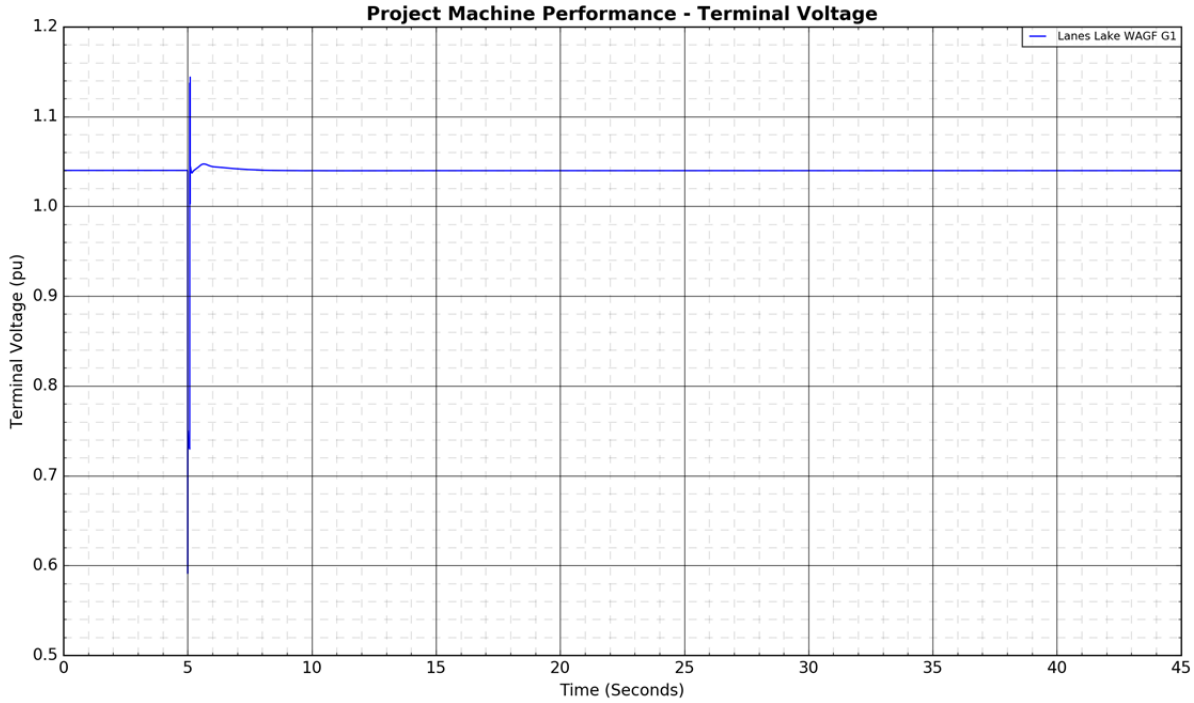
Project Machine Performance - Terminal Voltage
Lanes Lake WAGF G1
Terminal Voltage (pu)
Time (Seconds)
1.2
1.1
1.0
0.9
0.8
0.7
0.6
0.5
0
5
10
15
20
25
30
35
40
45


Project Machine Performance - Active Power
Lanes Lake WAGF G1
Active Power (pu)
Time (Seconds)
2.2
2.0
1.8
1.6
1.4
1.2
1.0
0.8
0
5
10
15
20
25
30
35
40
45

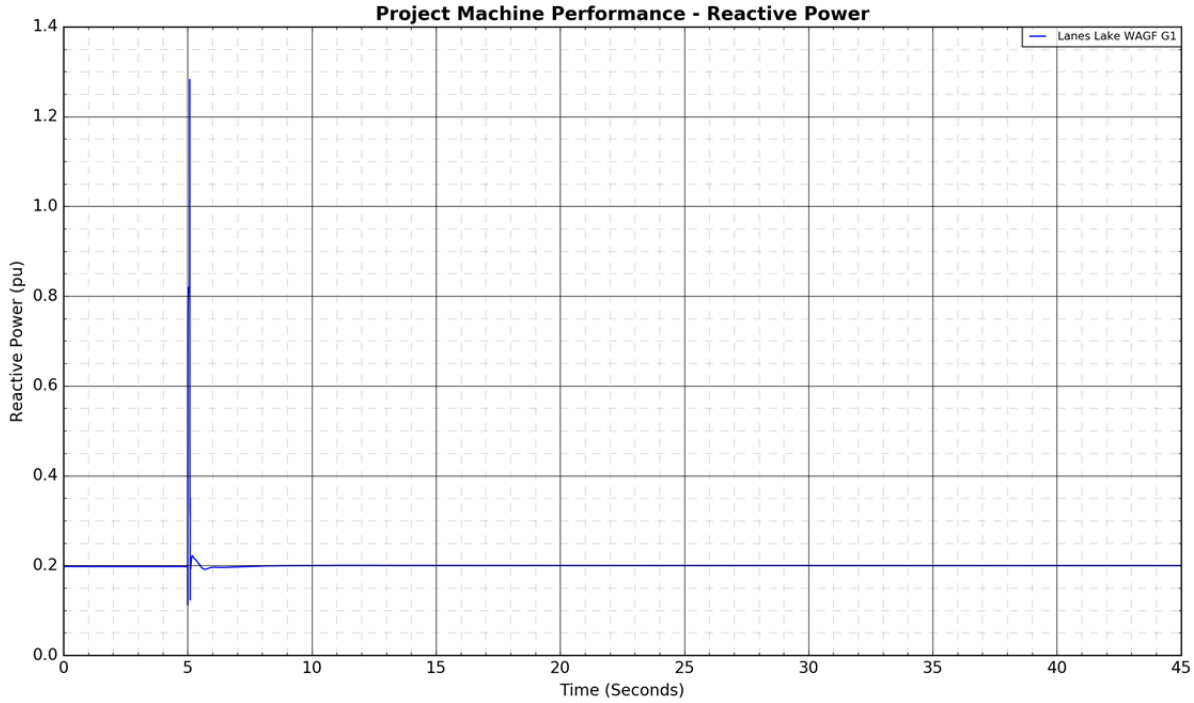
Project Machine Performance - Reactive Power
Lanes Lake WAGF G1
Reactive Power (pu)
Time (Seconds)
1.4
1.2
1.0
0.8
0.6
0.4
0.2
0.0
0
5
10
15
20
25
30
35
40
45

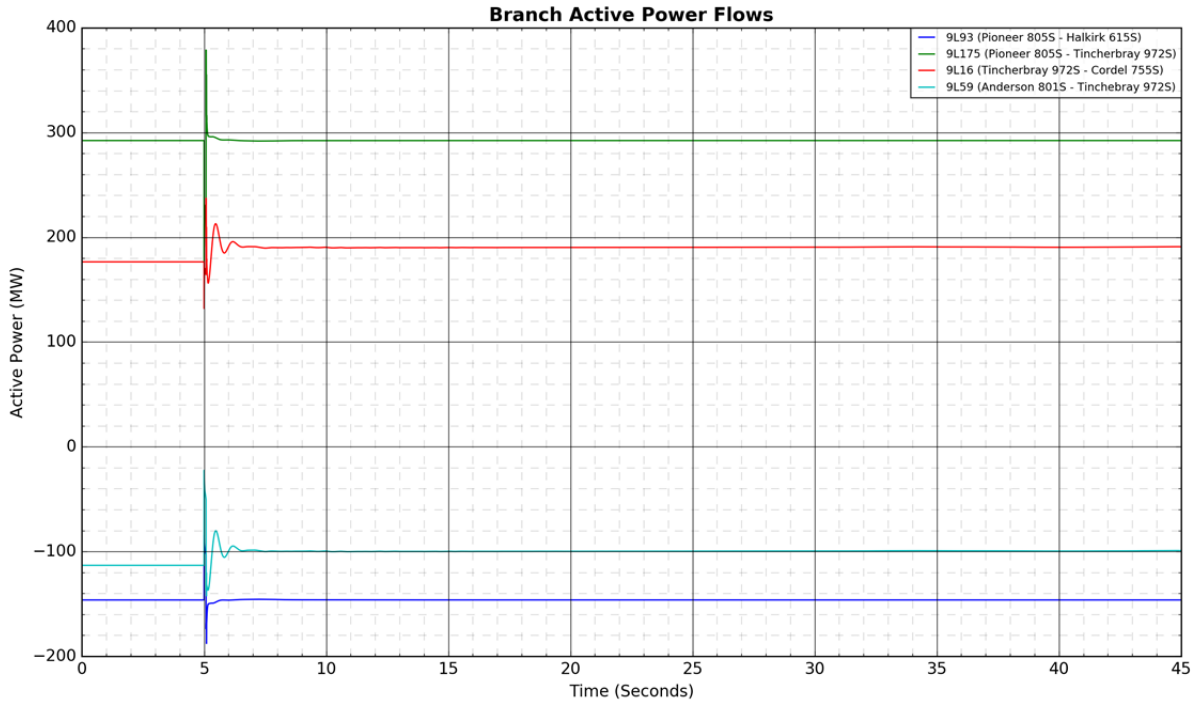
Branch Active Power Flows
9L93 (Pioneer 805S - Halkirk 615S)
9L175 (Pioneer 805S - Tincherbray 972S)
9L16 (Tincherbray 972S - Cordel 755S)
9L59 (Anderson 801S - Tinchebray 972S)
Active Power (MW)
Time (Seconds)

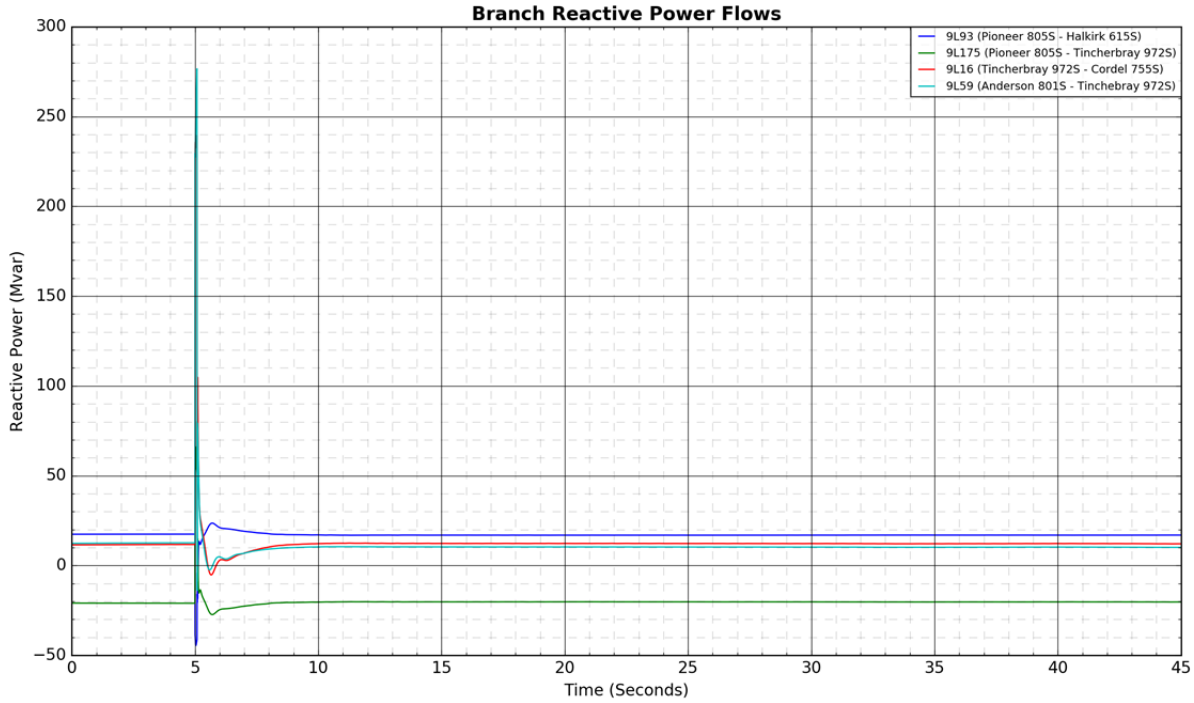
Branch Reactive Power Flows
9L93 (Pioneer 805S - Halkirk 615S)
9L175 (Pioneer 805S - Tincherbray 972S)
9L16 (Tincherbray 972S - Cordel 755S)
9L59 (Anderson 801S - Tinchebray 972S)
Reactive Power (Mvar)
Time (Seconds)

Figure A4-13: 912L\9L912 (Nevis 766S - Red Deer 63S): 3-phase fault at Nevis 766S

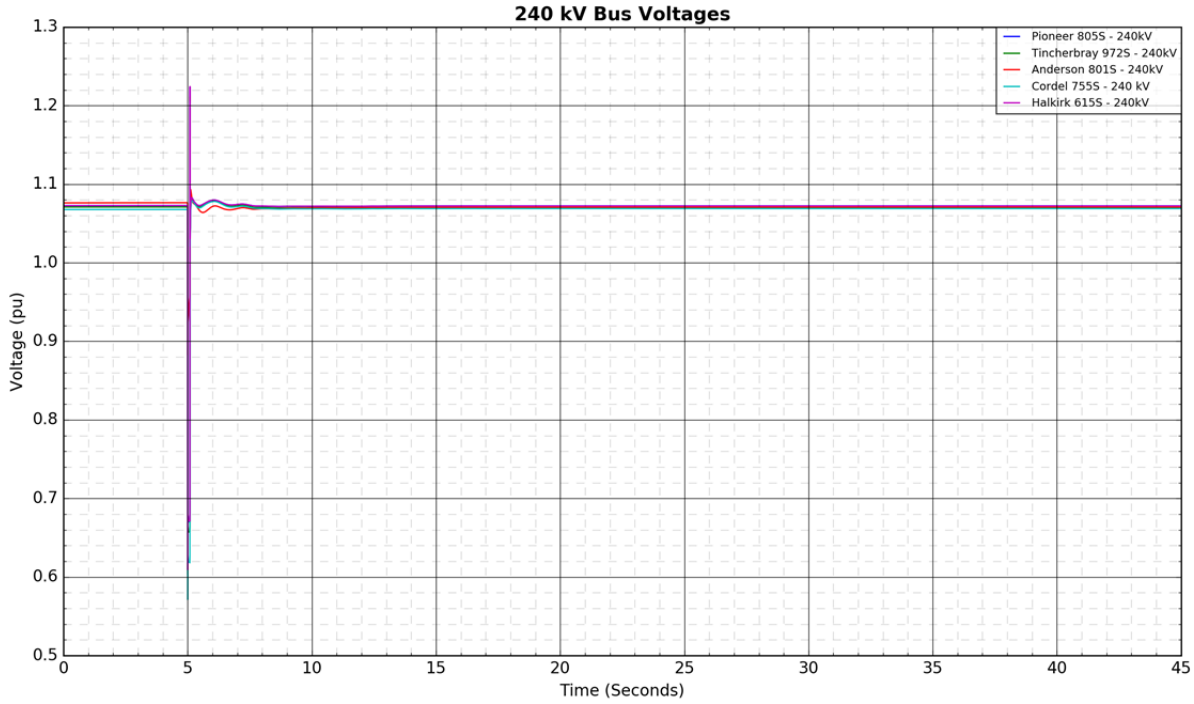

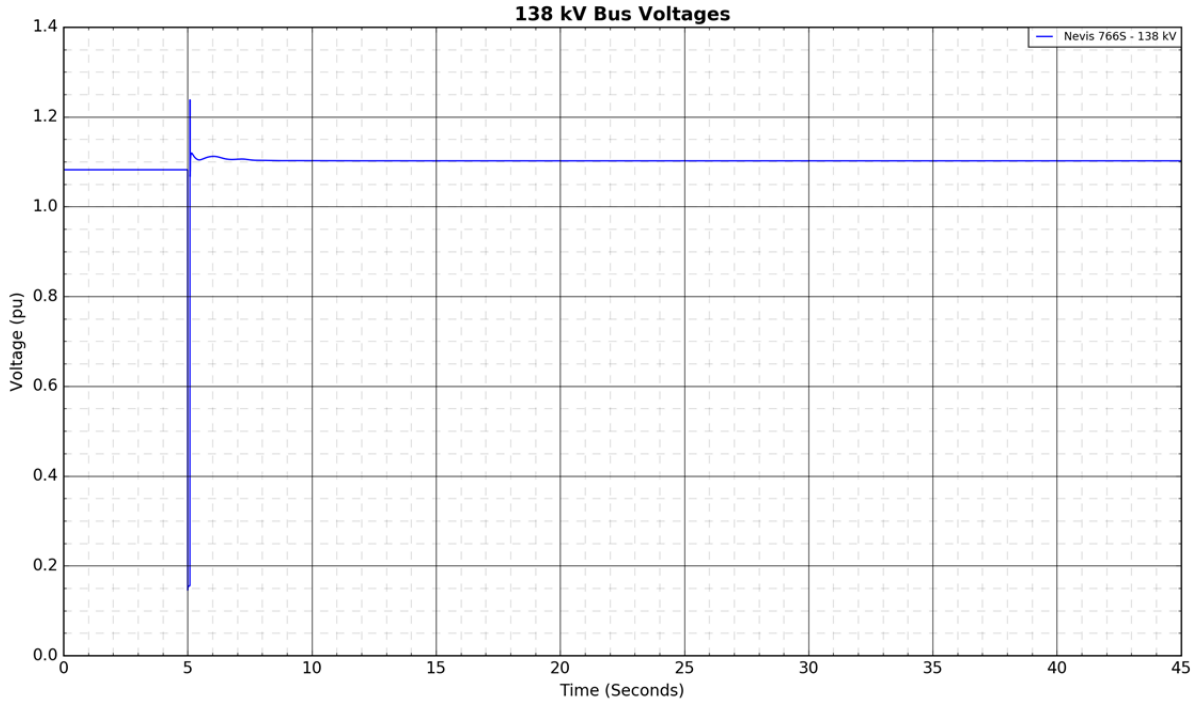

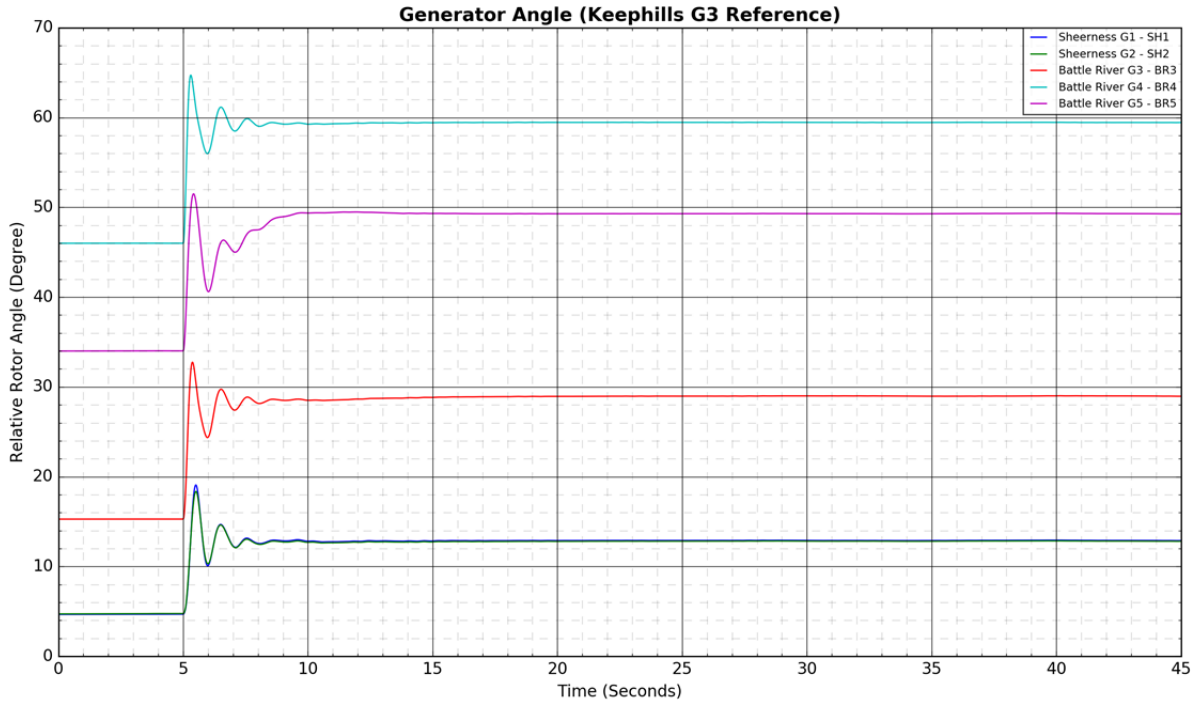
Generator Angle (Keephills G3 Reference)
Relative Rotor Angle (Degree)
Time (Seconds)
Sheerness G1 - SH1
Sheerness G2 - SH2
Battle River G3 - BR3
Battle River G4 - BR4
Battle River G5 - BR5
0
10
20
30
40
50
60
70
0
5
10
15
20
25
30
35
40
45

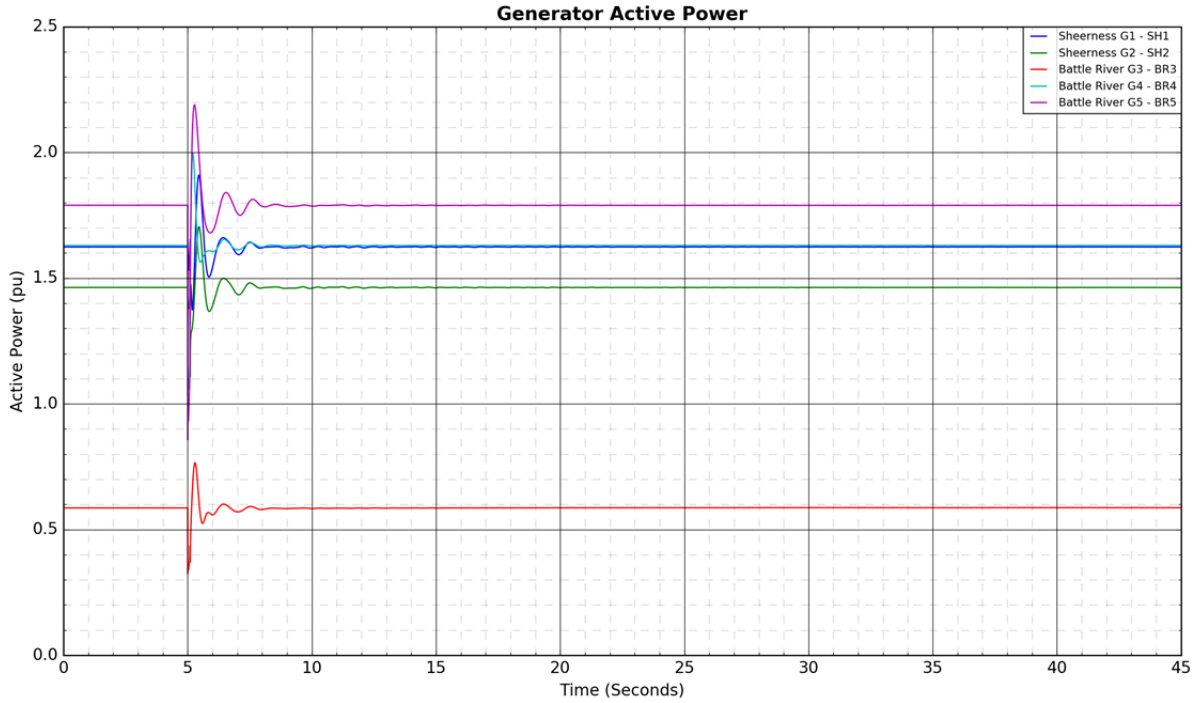
Generator Active Power
Active Power (pu)
Time (Seconds)
Sheerness G1 - SH1
Sheerness G2 - SH2
Battle River G3 - BR3
Battle River G4 - BR4
Battle River G5 - BR5
0.0
0.5
1.0
1.5
2.0
2.5
0
5
10
15
20
25
30
35
40
45

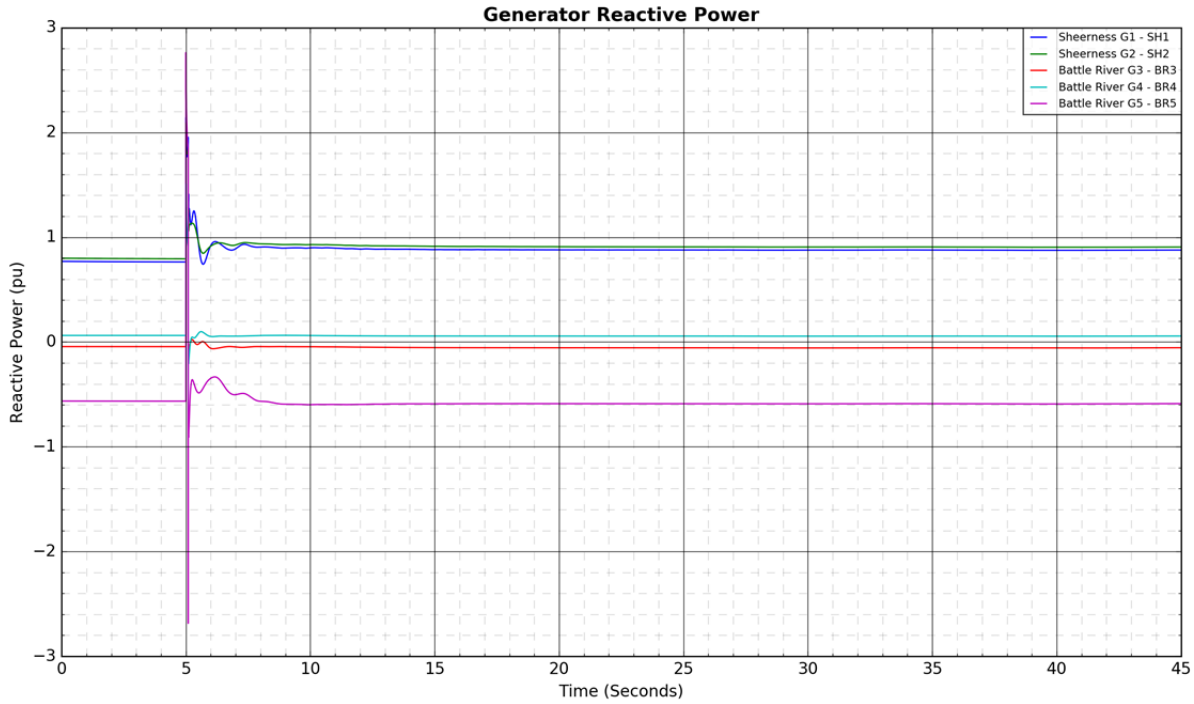
Generator Reactive Power
Sheerness G1 - SH1
Sheerness G2 - SH2
Battle River G3 - BR3
Battle River G4 - BR4
Battle River G5 - BR5
Reactive Power (pu)
Time (Seconds)
3
2
1
0
−1
−2
−3
0
5
10
15
20
25
30
35
40
45

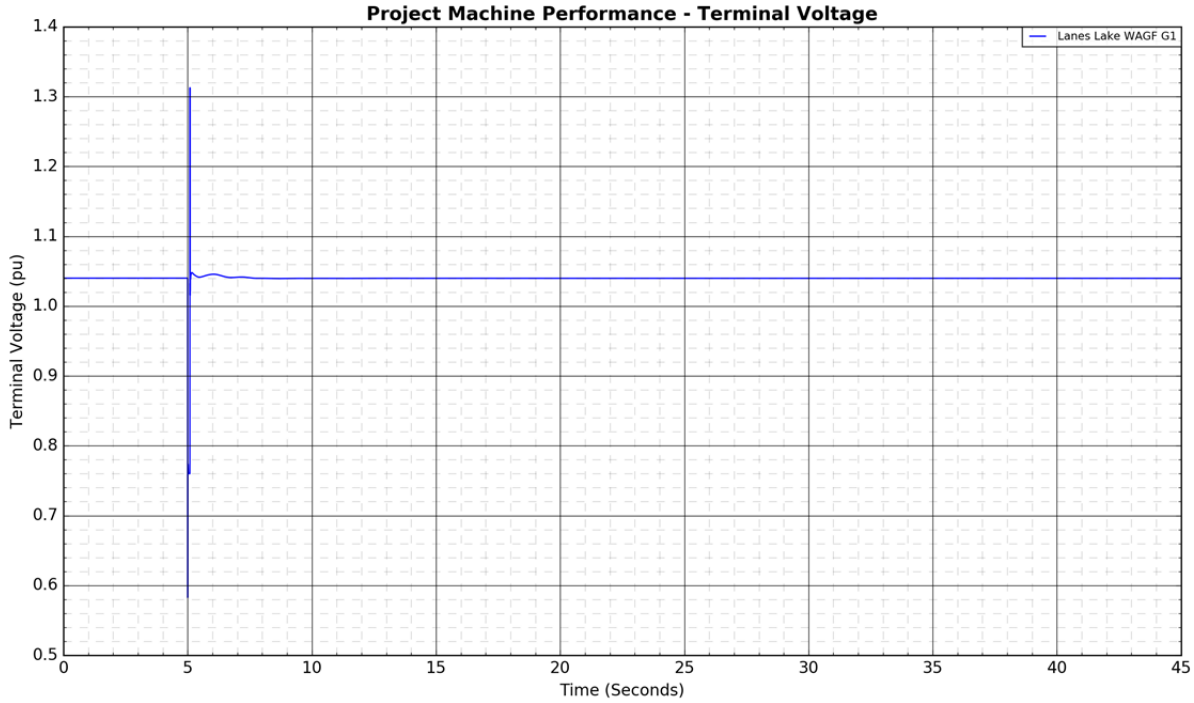
Project Machine Performance - Terminal Voltage
Lanes Lake WAGF G1
Terminal Voltage (pu)
Time (Seconds)
1.4
1.3
1.2
1.1
1.0
0.9
0.8
0.7
0.6
0.5
0
5
10
15
20
25
30
35
40
45


Project Machine Performance - Active Power
Lanes Lake WAGF G1
Active Power (pu)
Time (Seconds)
2.6
2.4
2.2
2.0
1.8
1.6
1.4
1.2
1.0
0.8
0
5
10
15
20
25
30
35
40
45

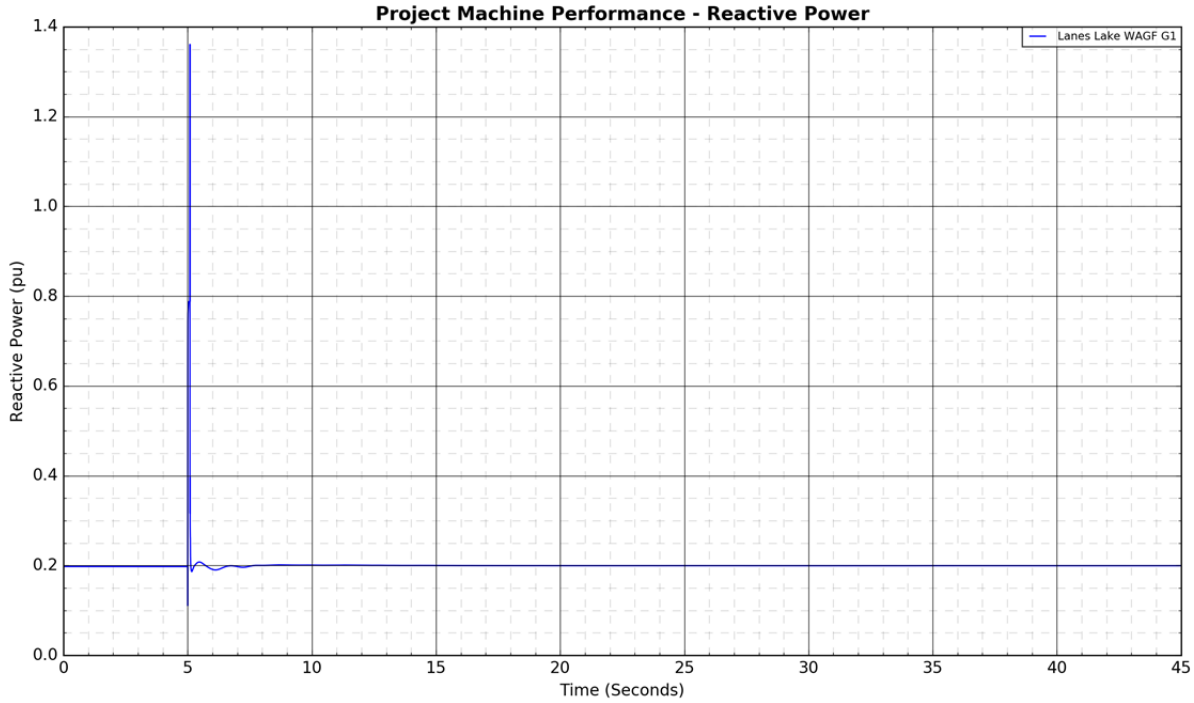
Project Machine Performance - Reactive Power
Lanes Lake WAGF G1
Reactive Power (pu)
Time (Seconds)
1.4
1.2
1.0
0.8
0.6
0.4
0.2
0.0
0
5
10
15
20
25
30
35
40
45

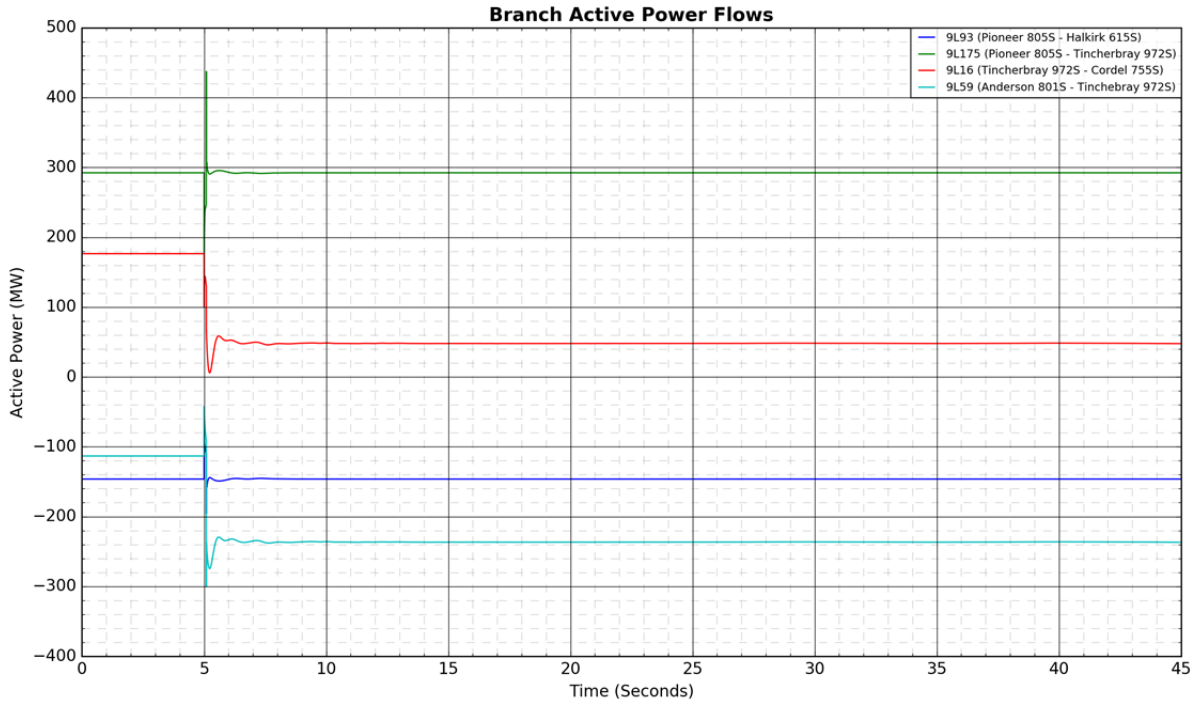
Branch Active Power Flows
9L93 (Pioneer 805S - Halkirk 615S)
9L175 (Pioneer 805S - Tincherbray 972S)
9L16 (Tincherbray 972S - Cordel 755S)
9L59 (Anderson 801S - Tinchebray 972S)
Active Power (MW)
Time (Seconds)

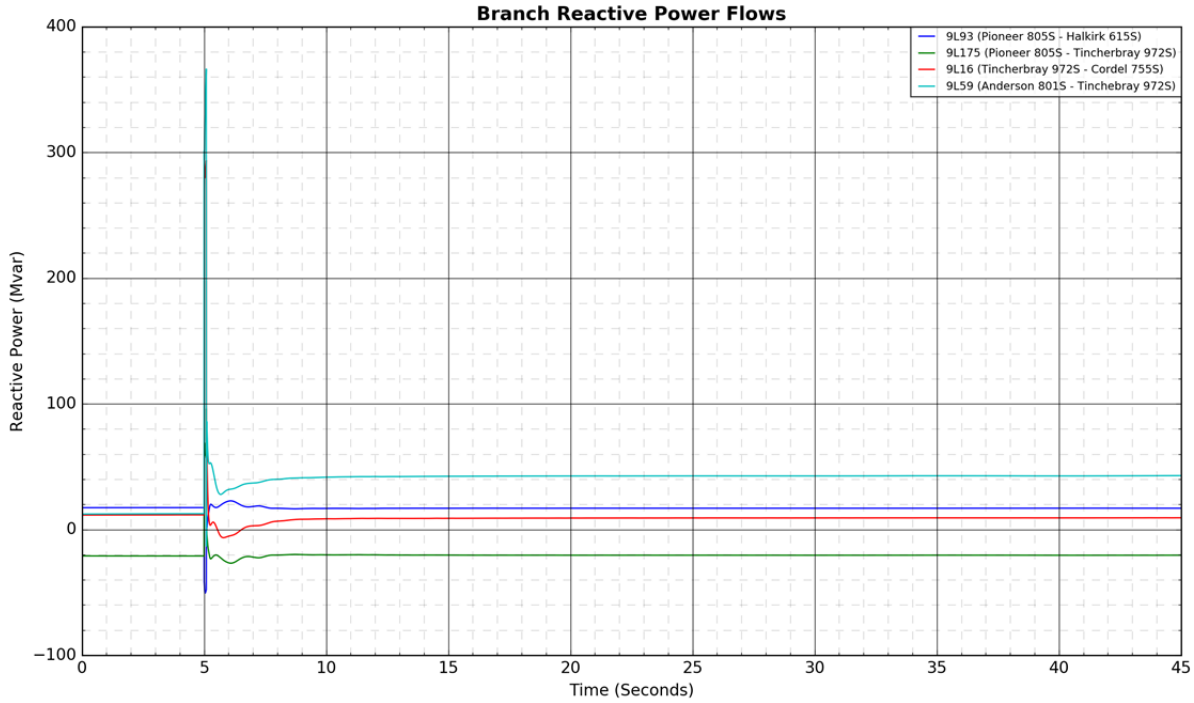
Branch Reactive Power Flows
9L93 (Pioneer 805S - Halkirk 615S)
9L175 (Pioneer 805S - Tincherbray 972S)
9L16 (Tincherbray 972S - Cordel 755S)
9L59 (Anderson 801S - Tinchebray 972S)
Reactive Power (Mvar)
Time (Seconds)

Figure A4-14: 912L\9L912 (Nevis 766S - Red Deer 63S): 3-phase fault at Red Deer 63S

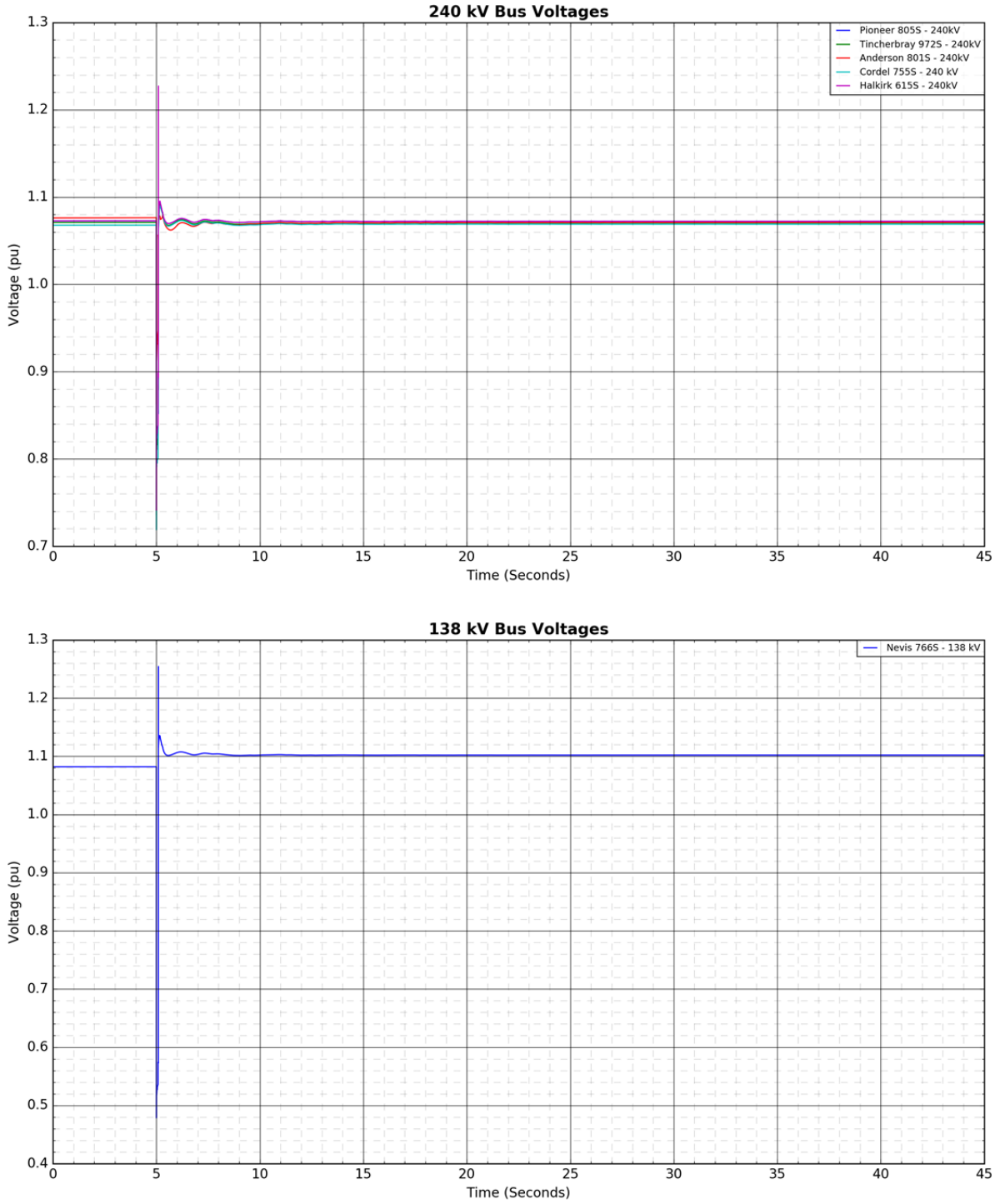

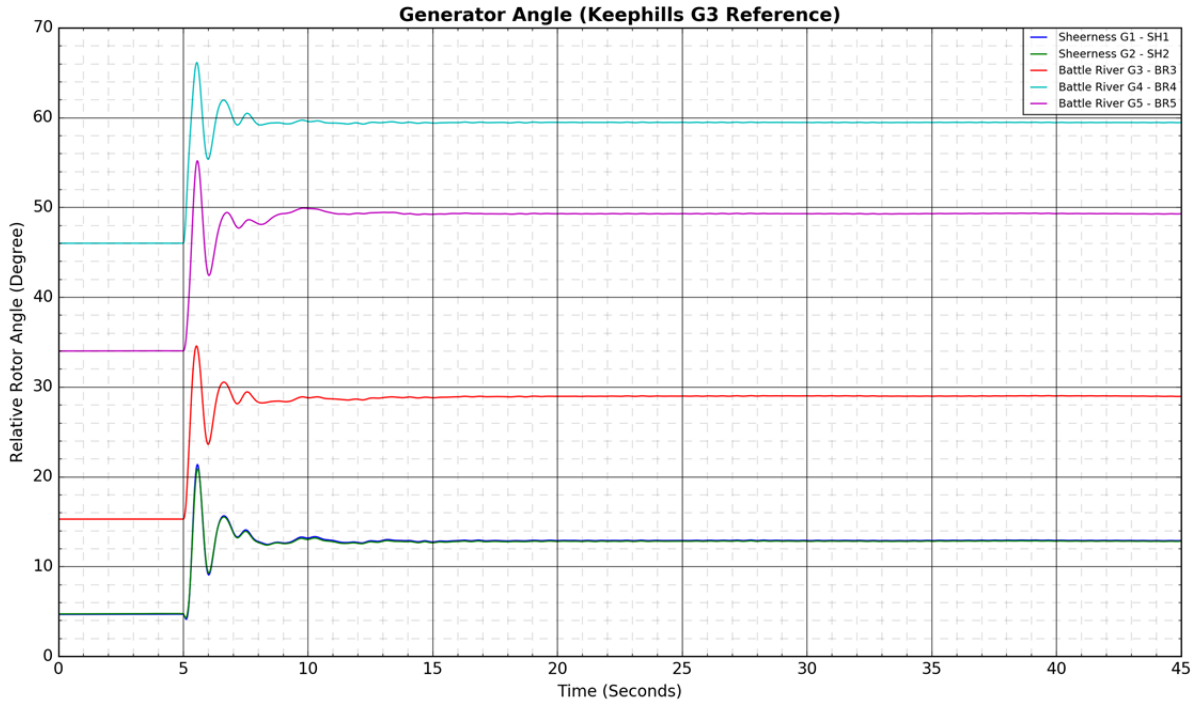
Generator Angle (Keephills G3 Reference)
Relative Rotor Angle (Degree)
Time (Seconds)
Sheerness G1 - SH1
Sheerness G2 - SH2
Battle River G3 - BR3
Battle River G4 - BR4
Battle River G5 - BR5
0
10
20
30
40
50
60
70
0
5
10
15
20
25
30
35
40
45

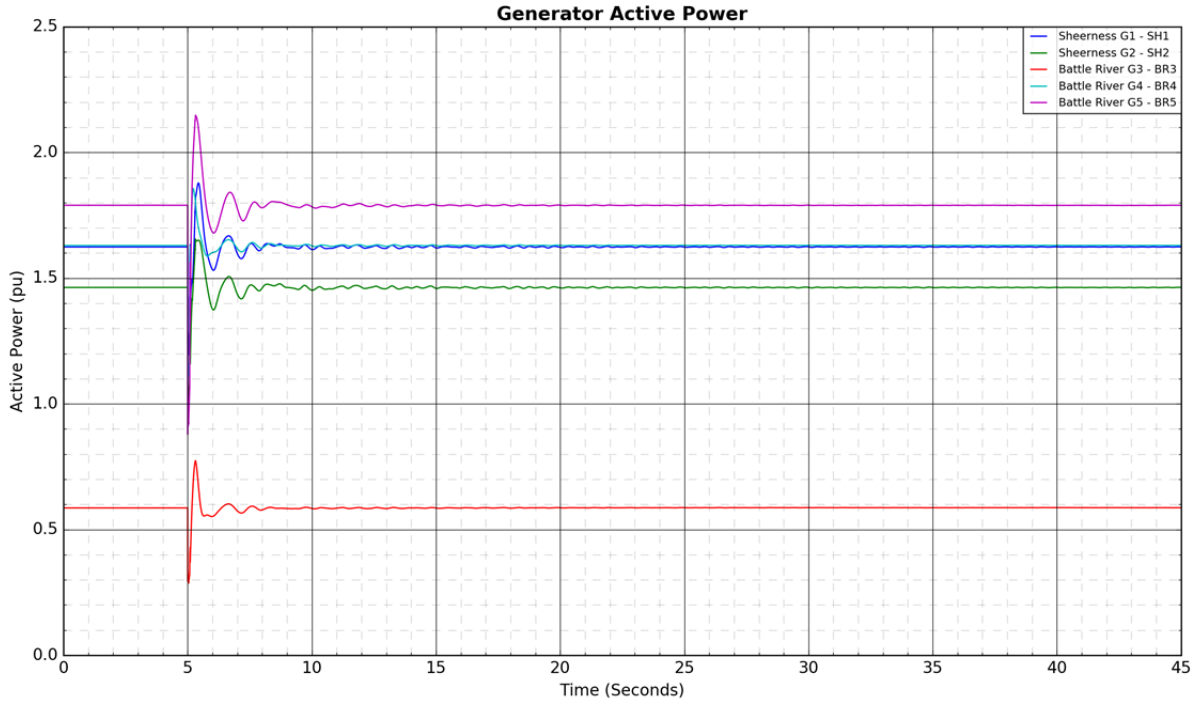
Generator Active Power
Active Power (pu)
Time (Seconds)
Sheerness G1 - SH1
Sheerness G2 - SH2
Battle River G3 - BR3
Battle River G4 - BR4
Battle River G5 - BR5
0.0
0.5
1.0
1.5
2.0
2.5
0
5
10
15
20
25
30
35
40
45

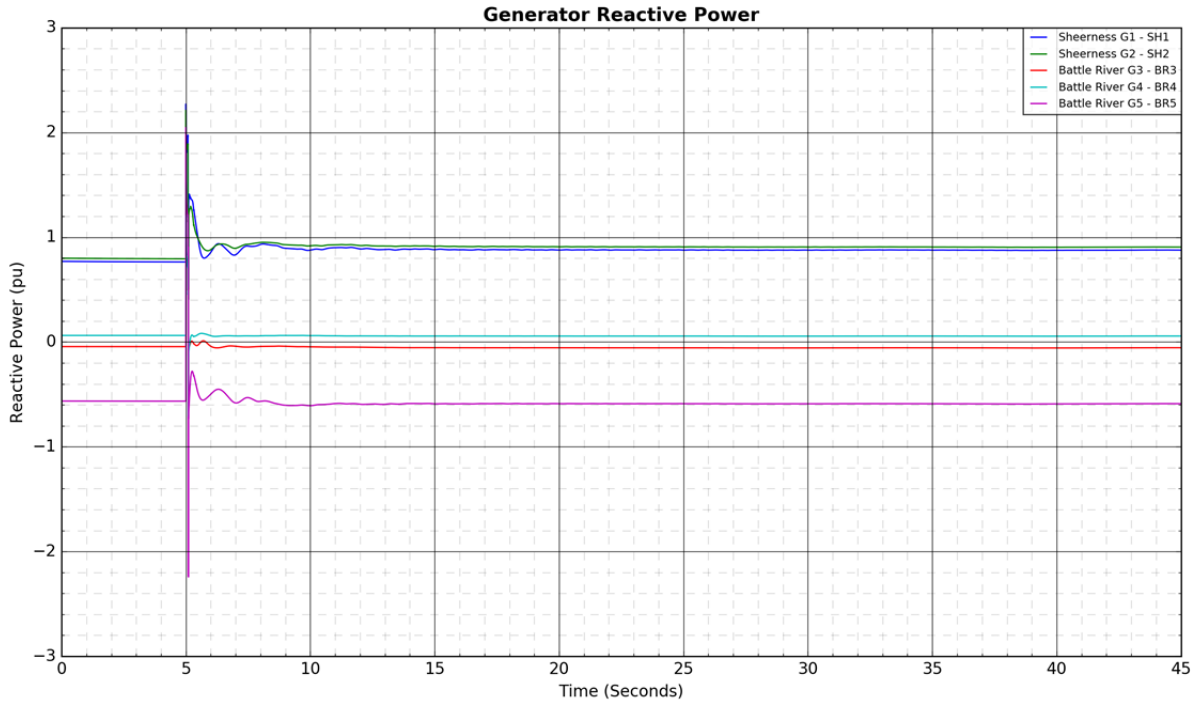
Generator Reactive Power
Sheerness G1 - SH1
Sheerness G2 - SH2
Battle River G3 - BR3
Battle River G4 - BR4
Battle River G5 - BR5
Reactive Power (pu)
Time (Seconds)

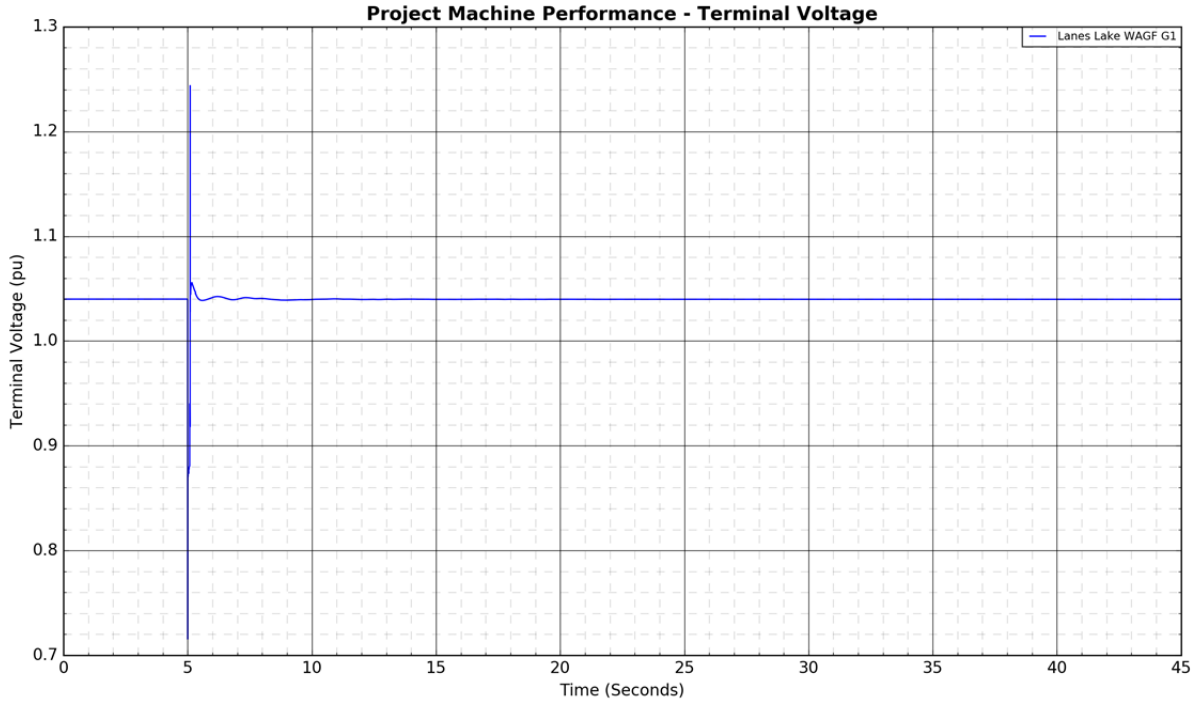
Project Machine Performance - Terminal Voltage
Lanes Lake WAGF G1
Terminal Voltage (pu)
Time (Seconds)


Project Machine Performance - Active Power
Lanes Lake WAGF G1
Active Power (pu)
Time (Seconds)
2.2
2.0
1.8
1.6
1.4
1.2
1.0
0
5
10
15
20
25
30
35
40
45

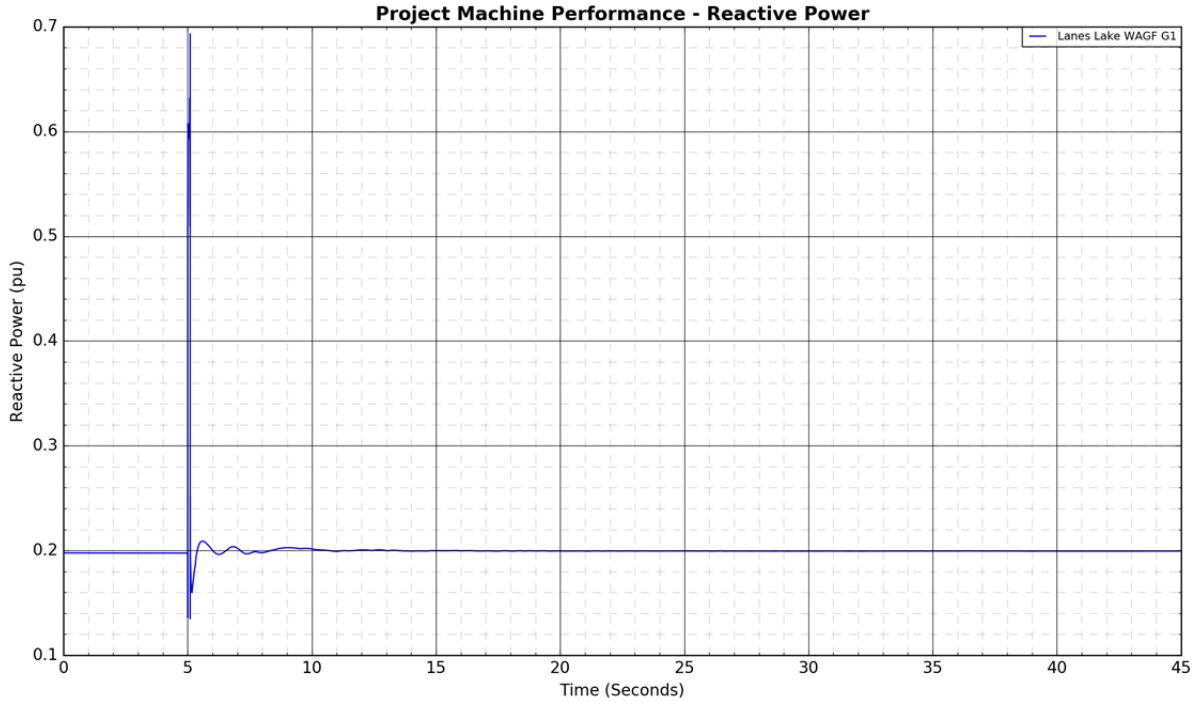
Project Machine Performance - Reactive Power
Lanes Lake WAGF G1
Reactive Power (pu)
Time (Seconds)
0.7
0.6
0.5
0.4
0.3
0.2
0.1
0
5
10
15
20
25
30
35
40
45

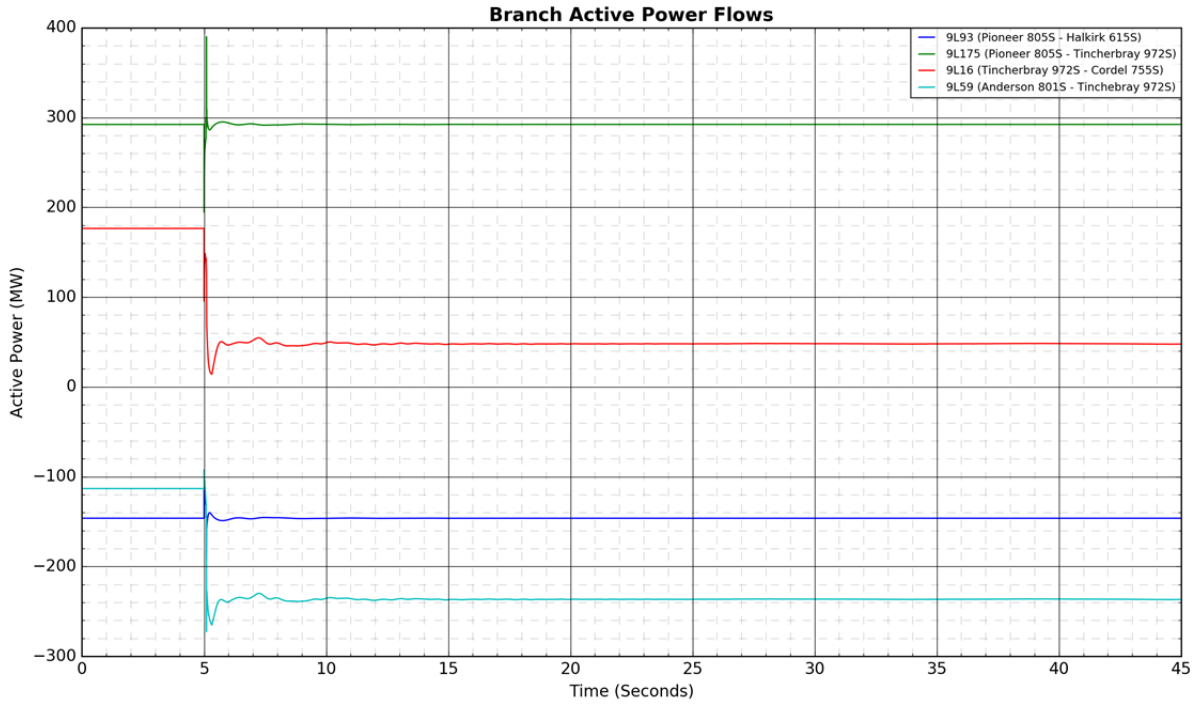
Branch Active Power Flows
9L93 (Pioneer 805S - Halkirk 615S)
9L175 (Pioneer 805S - Tincherbray 972S)
9L16 (Tincherbray 972S - Cordel 755S)
9L59 (Anderson 801S - Tinchebray 972S)
Active Power (MW)
Time (Seconds)

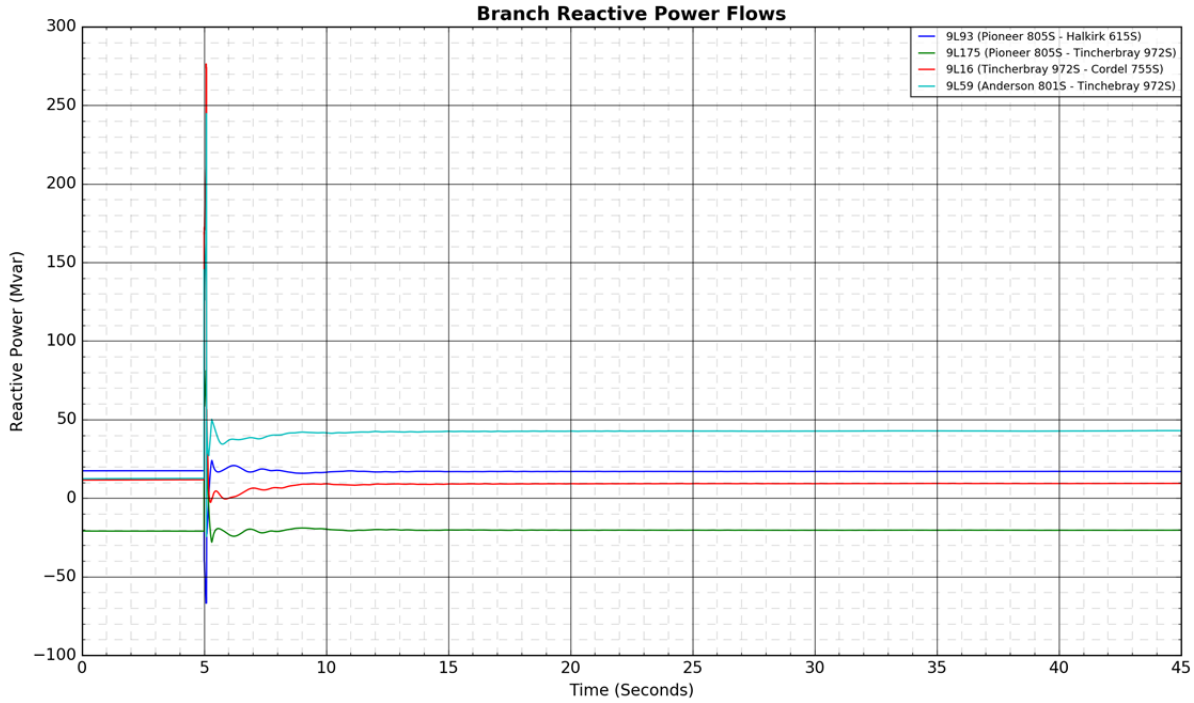
Branch Reactive Power Flows
9L93 (Pioneer 805S - Halkirk 615S)
9L175 (Pioneer 805S - Tincherbray 972S)
9L16 (Tincherbray 972S - Cordel 755S)
9L59 (Anderson 801S - Tinchebray 972S)
Reactive Power (Mvar)
Time (Seconds)

2. Stability Results 2019 Summer Light - Case B

Figure A4-15: 9L24 (Oakland 946S - Lanfine 959S): 3-phase fault at Oakland 946S



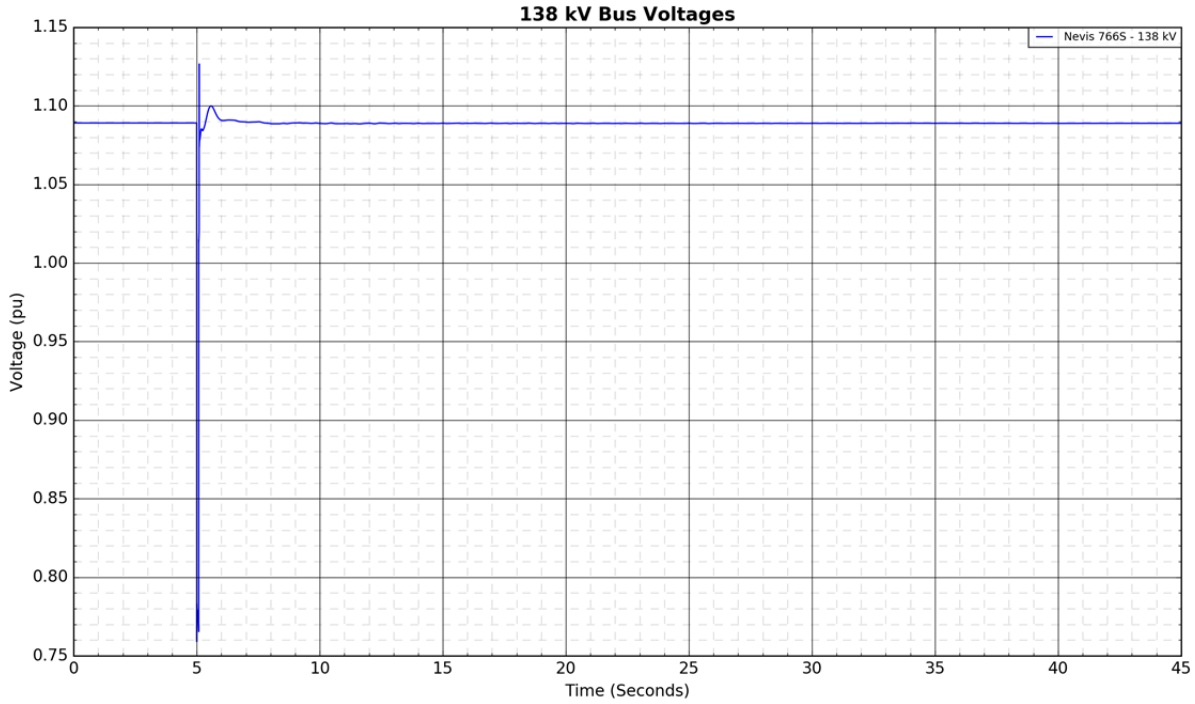

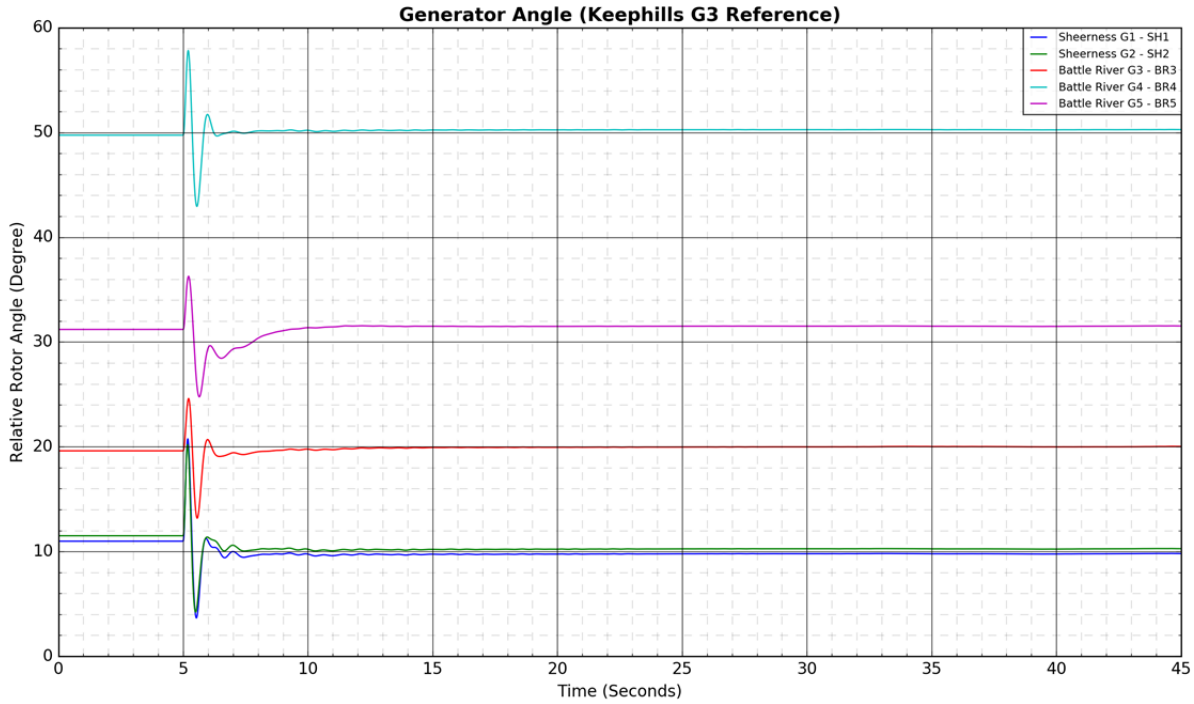
Generator Angle (Keephills G3 Reference)
Relative Rotor Angle (Degree)
Time (Seconds)
Sheerness G1 - SH1
Sheerness G2 - SH2
Battle River G3 - BR3
Battle River G4 - BR4
Battle River G5 - BR5
0
10
20
30
40
50
60
0
5
10
15
20
25
30
35
40
45

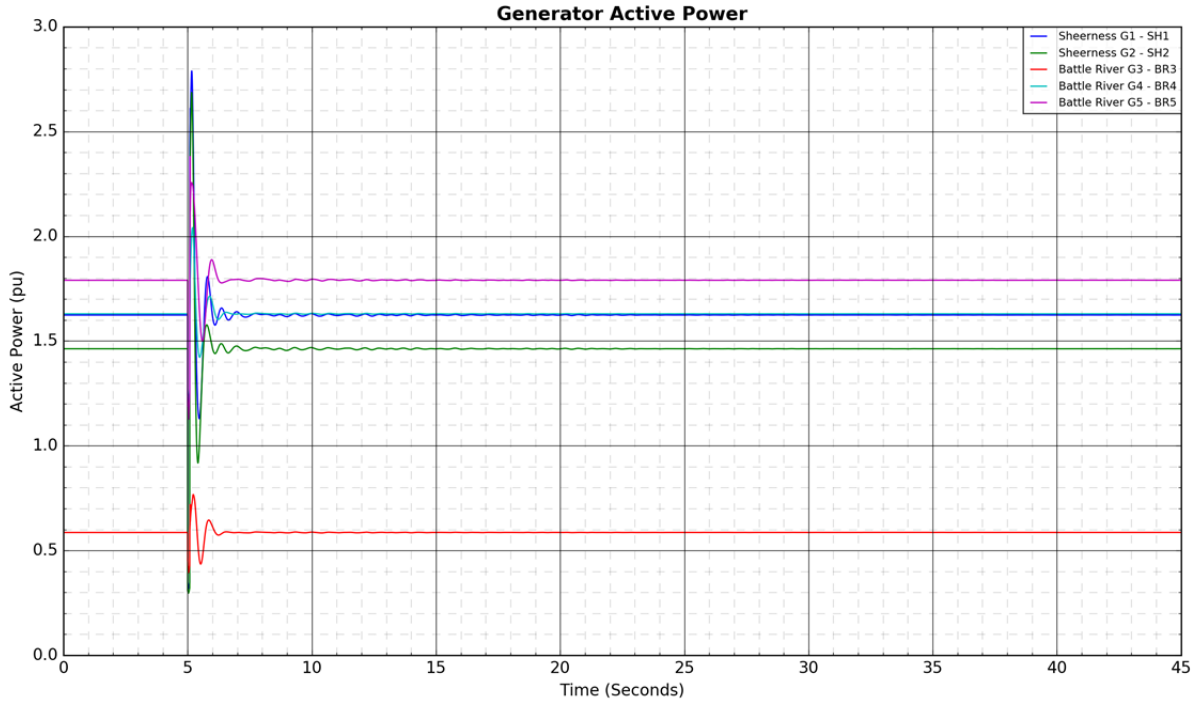
Generator Active Power
Active Power (pu)
Time (Seconds)
Sheerness G1 - SH1
Sheerness G2 - SH2
Battle River G3 - BR3
Battle River G4 - BR4
Battle River G5 - BR5
0.0
0.5
1.0
1.5
2.0
2.5
3.0
0
5
10
15
20
25
30
35
40
45

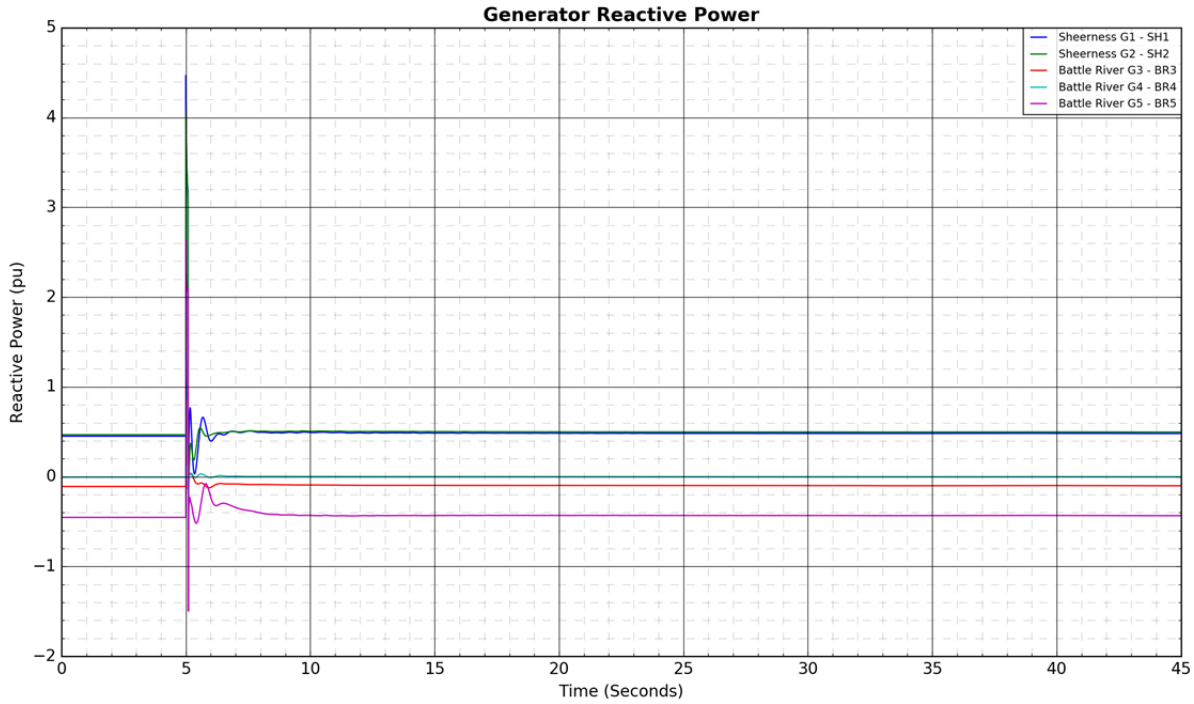
Generator Reactive Power
Sheerness G1 - SH1
Sheerness G2 - SH2
Battle River G3 - BR3
Battle River G4 - BR4
Battle River G5 - BR5
Reactive Power (pu)
Time (Seconds)

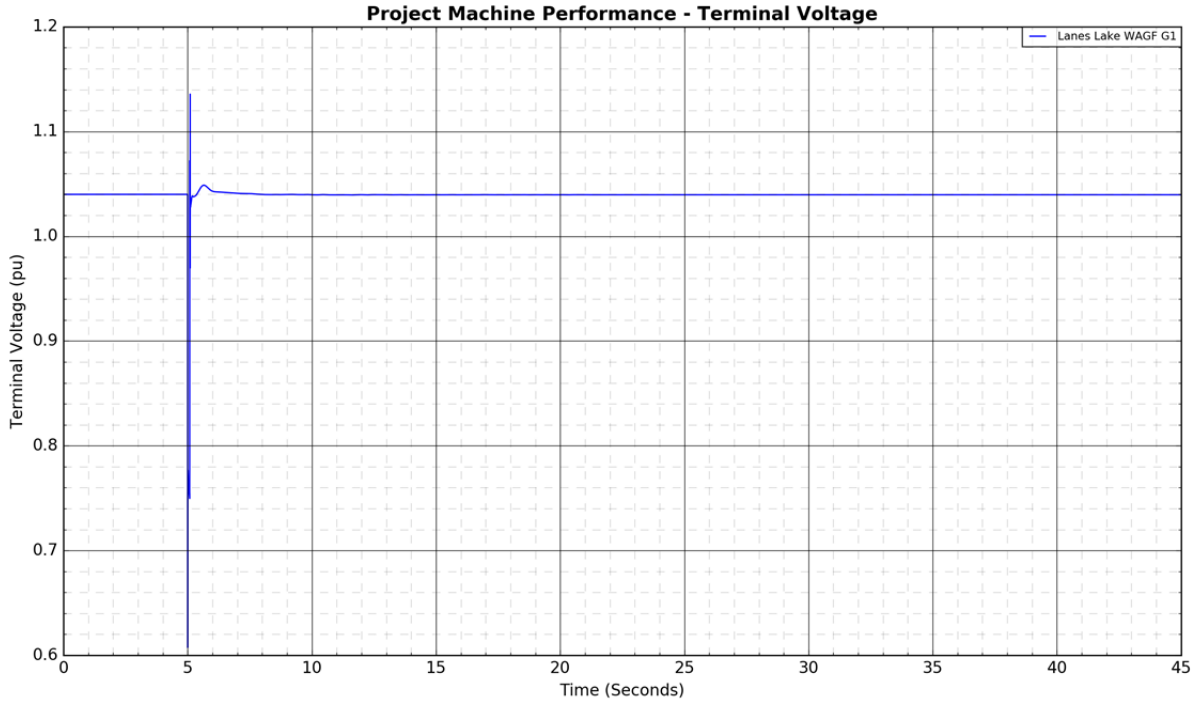
Project Machine Performance - Terminal Voltage
Lanes Lake WAGF G1
Terminal Voltage (pu)
Time (Seconds)


Project Machine Performance - Active Power
Lanes Lake WAGF G1
Active Power (pu)
Time (Seconds)
2.2
2.0
1.8
1.6
1.4
1.2
1.0
0.8
0
5
10
15
20
25
30
35
40
45

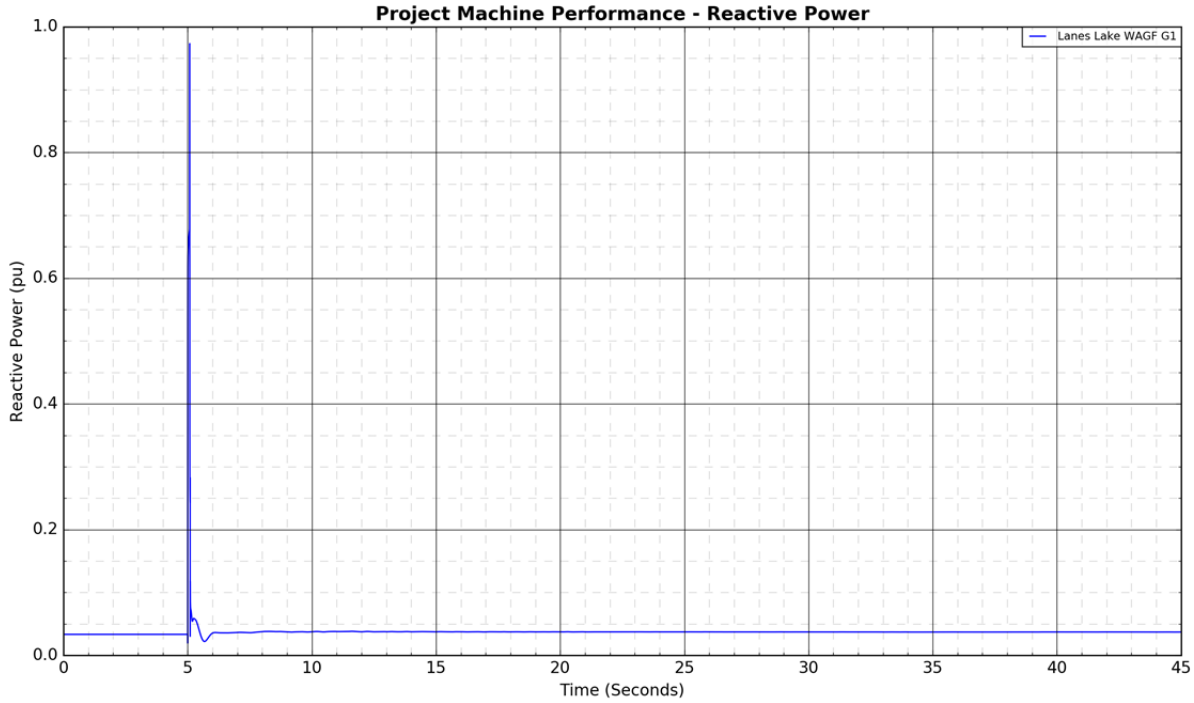
Project Machine Performance - Reactive Power
Lanes Lake WAGF G1
Reactive Power (pu)
Time (Seconds)
1.0
0.8
0.6
0.4
0.2
0.0
0
5
10
15
20
25
30
35
40
45


Branch Active Power Flows
9L93 (Pioneer 805S - Halkirk 615S)
9L175 (Pioneer 805S - Tincherbray 972S)
9L16 (Tincherbray 972S - Cordel 755S)
9L59 (Anderson 801S - Tinchebray 972S)
Active Power (MW)
Time (Seconds)

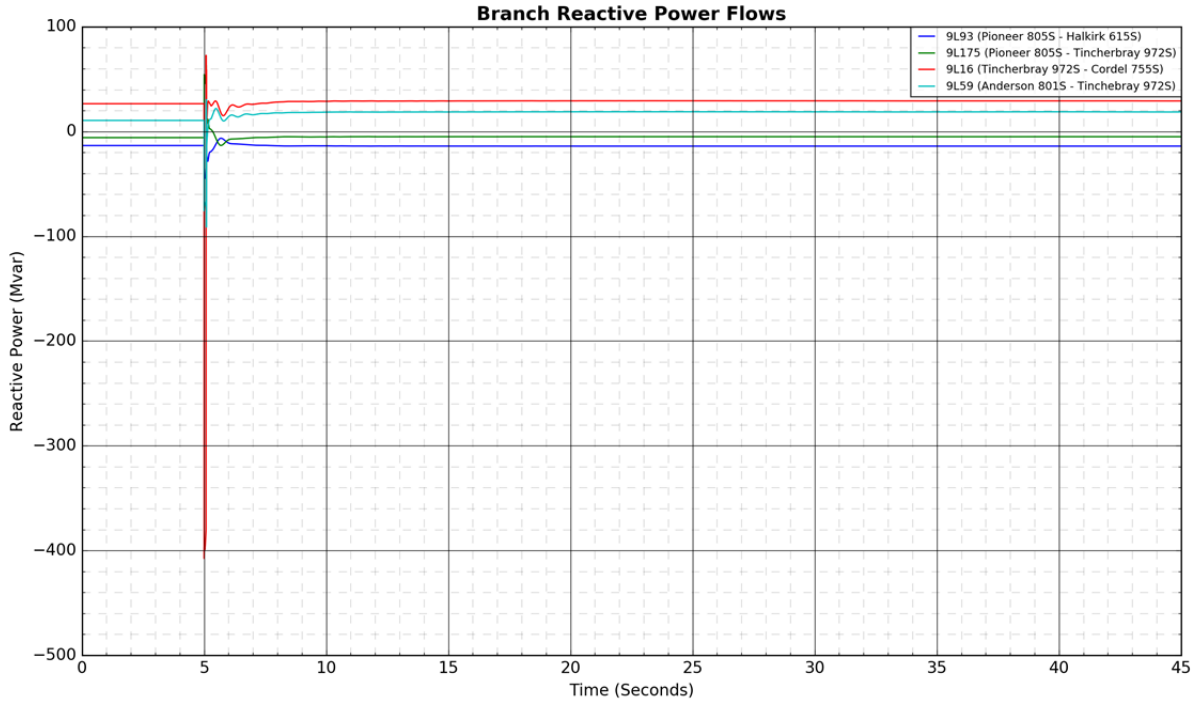
Branch Reactive Power Flows
9L93 (Pioneer 805S - Halkirk 615S)
9L175 (Pioneer 805S - Tincherbray 972S)
9L16 (Tincherbray 972S - Cordel 755S)
9L59 (Anderson 801S - Tinchebray 972S)
Reactive Power (Mvar)
Time (Seconds)

Figure A4-16: 9L24 (Oakland 946S - Lanfine 959S): 3-phase fault at Lanfine 959S



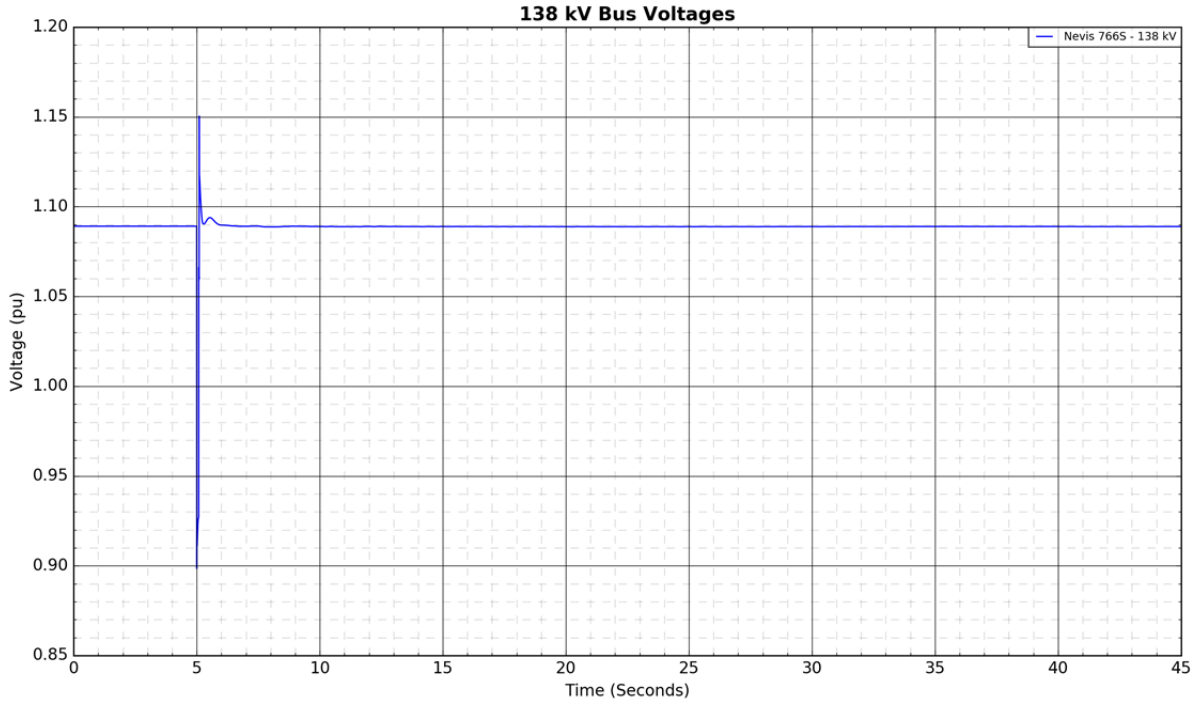

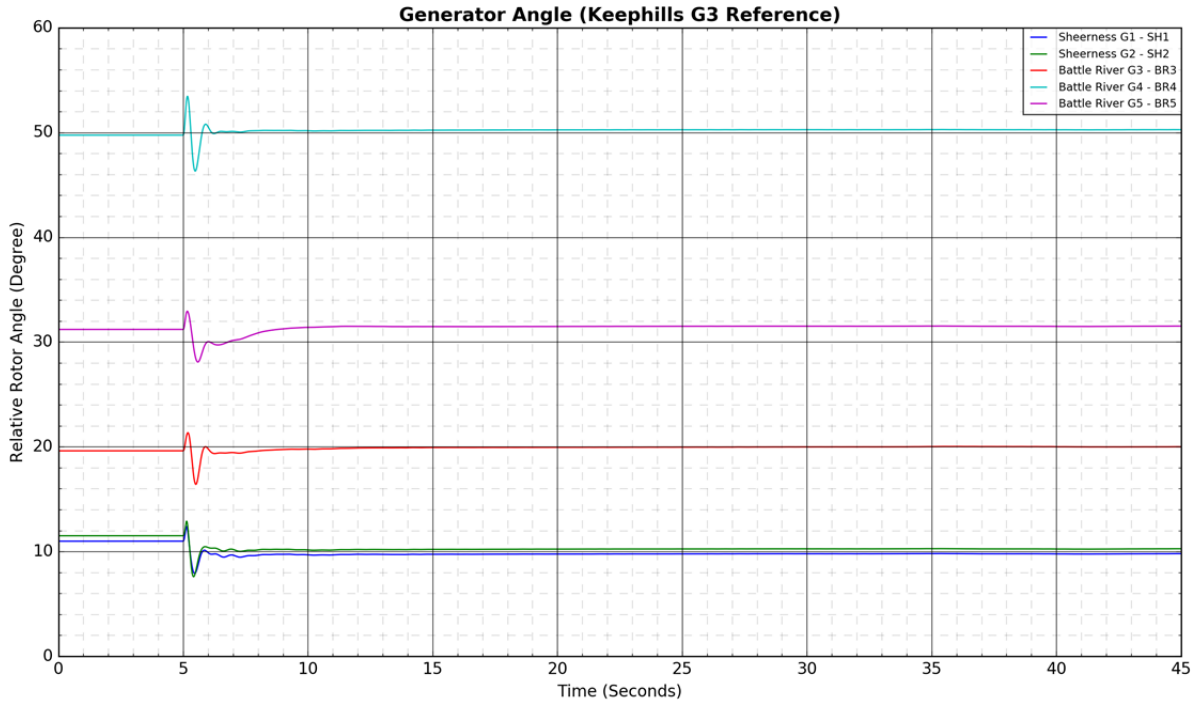
Generator Angle (Keephills G3 Reference)
Relative Rotor Angle (Degree)
Time (Seconds)
Sheerness G1 - SH1
Sheerness G2 - SH2
Battle River G3 - BR3
Battle River G4 - BR4
Battle River G5 - BR5
0
10
20
30
40
50
60
0
5
10
15
20
25
30
35
40
45

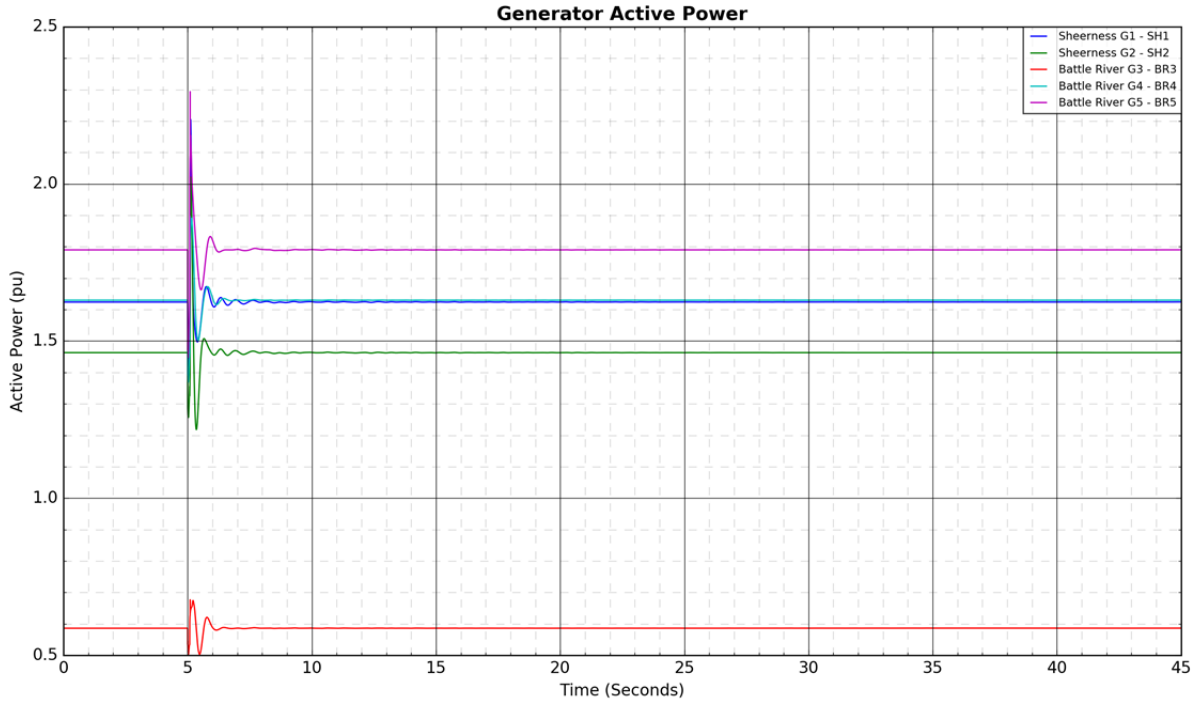
Generator Active Power
Active Power (pu)
Time (Seconds)
Sheerness G1 - SH1
Sheerness G2 - SH2
Battle River G3 - BR3
Battle River G4 - BR4
Battle River G5 - BR5
0.5
1.0
1.5
2.0
2.5
0
5
10
15
20
25
30
35
40
45

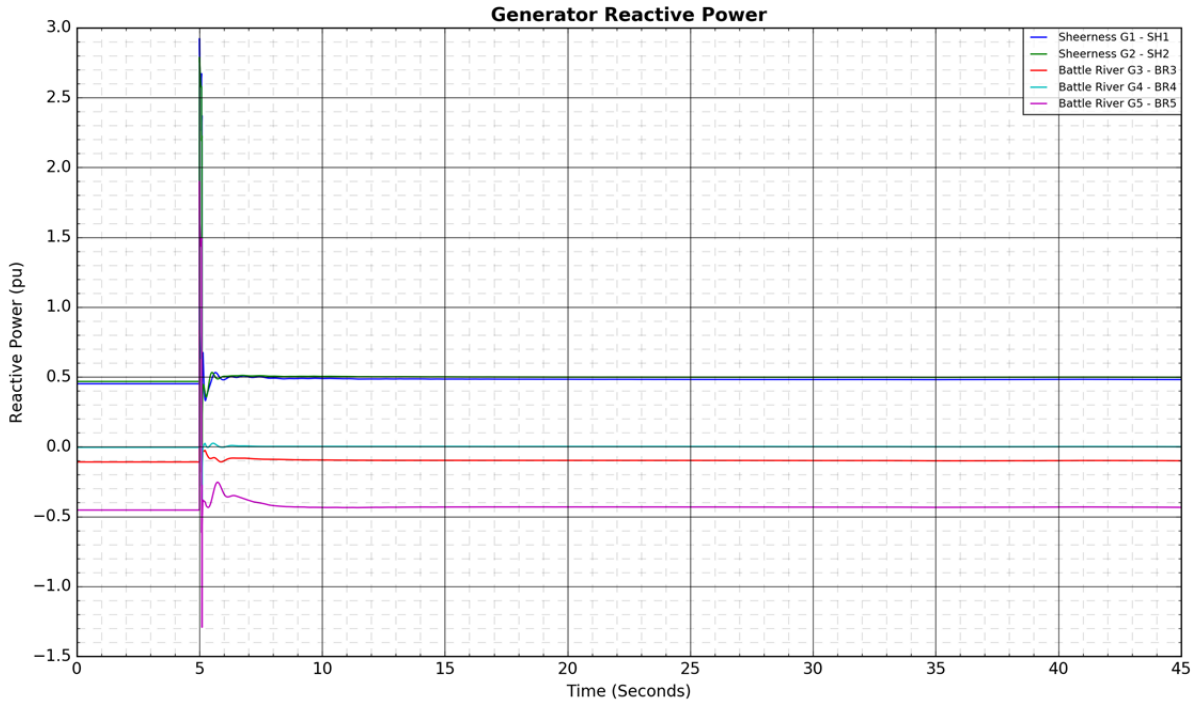
Generator Reactive Power
Sheerness G1 - SH1
Sheerness G2 - SH2
Battle River G3 - BR3
Battle River G4 - BR4
Battle River G5 - BR5
Reactive Power (pu)
Time (Seconds)

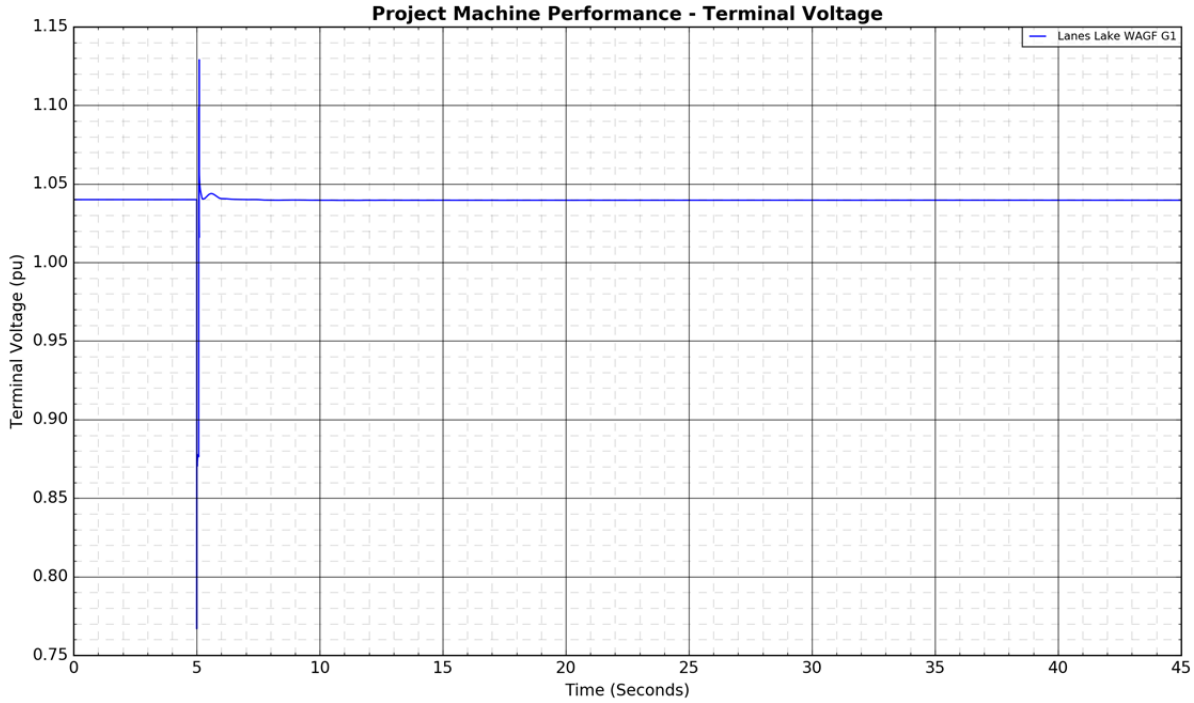
Project Machine Performance - Terminal Voltage
Lanes Lake WAGF G1
Terminal Voltage (pu)
Time (Seconds)


Project Machine Performance - Active Power
Lanes Lake WAGF G1
Active Power (pu)
1.9
1.8
1.7
1.6
1.5
1.4
1.3
1.2
1.1
0
5
10
15
20
25
30
35
40
45
Time (Seconds)

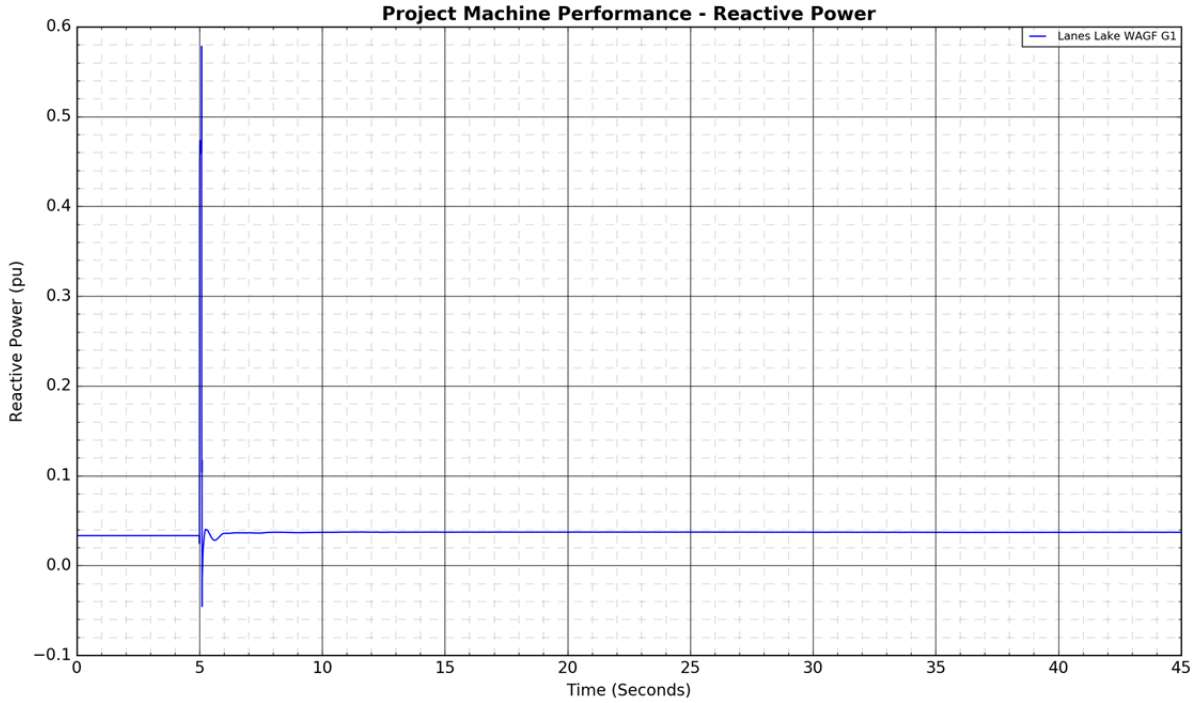
Project Machine Performance - Reactive Power
Lanes Lake WAGF G1
Reactive Power (pu)
0.6
0.5
0.4
0.3
0.2
0.1
0.0
−0.1
0
5
10
15
20
25
30
35
40
45
Time (Seconds)


Branch Active Power Flows
9L93 (Pioneer 805S - Halkirk 615S)
9L175 (Pioneer 805S - Tincherbray 972S)
9L16 (Tincherbray 972S - Cordel 755S)
9L59 (Anderson 801S - Tinchebray 972S)
Active Power (MW)
Time (Seconds)

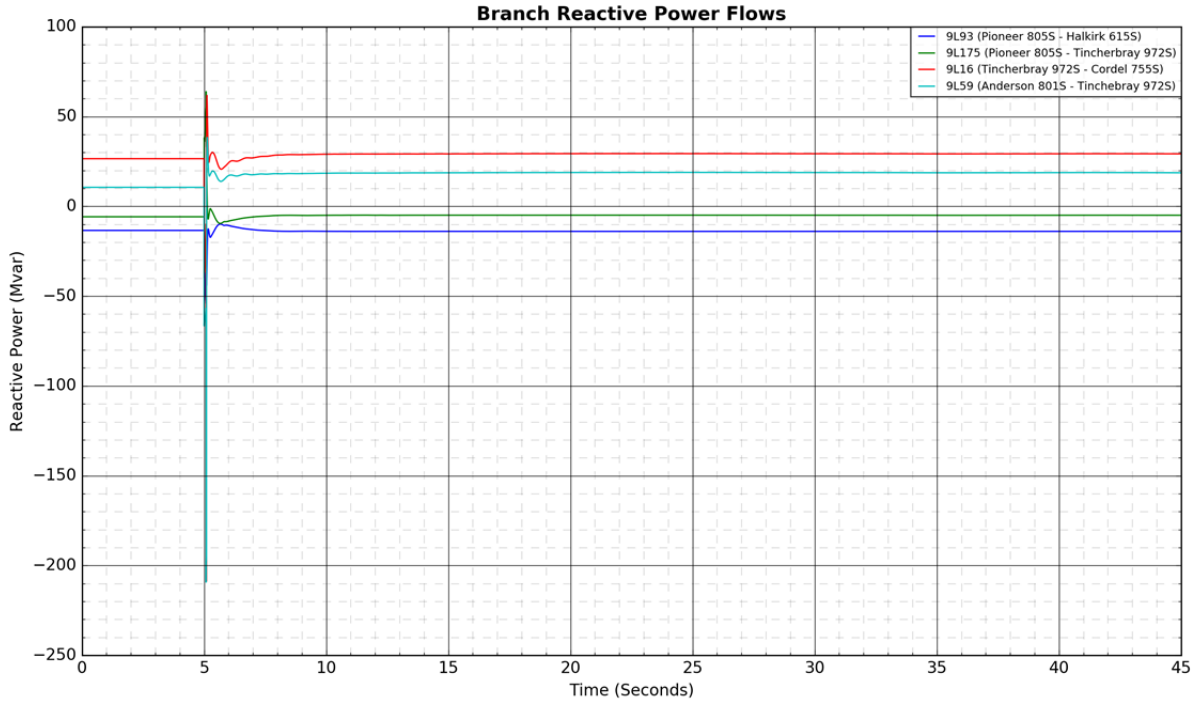
Branch Reactive Power Flows
9L93 (Pioneer 805S - Halkirk 615S)
9L175 (Pioneer 805S - Tincherbray 972S)
9L16 (Tincherbray 972S - Cordel 755S)
9L59 (Anderson 801S - Tinchebray 972S)
Reactive Power (Mvar)
Time (Seconds)

Figure A4-17: 9L29 (Oakland 946S - Coyote Lake 963S): 3-phase fault at Oakland 946S

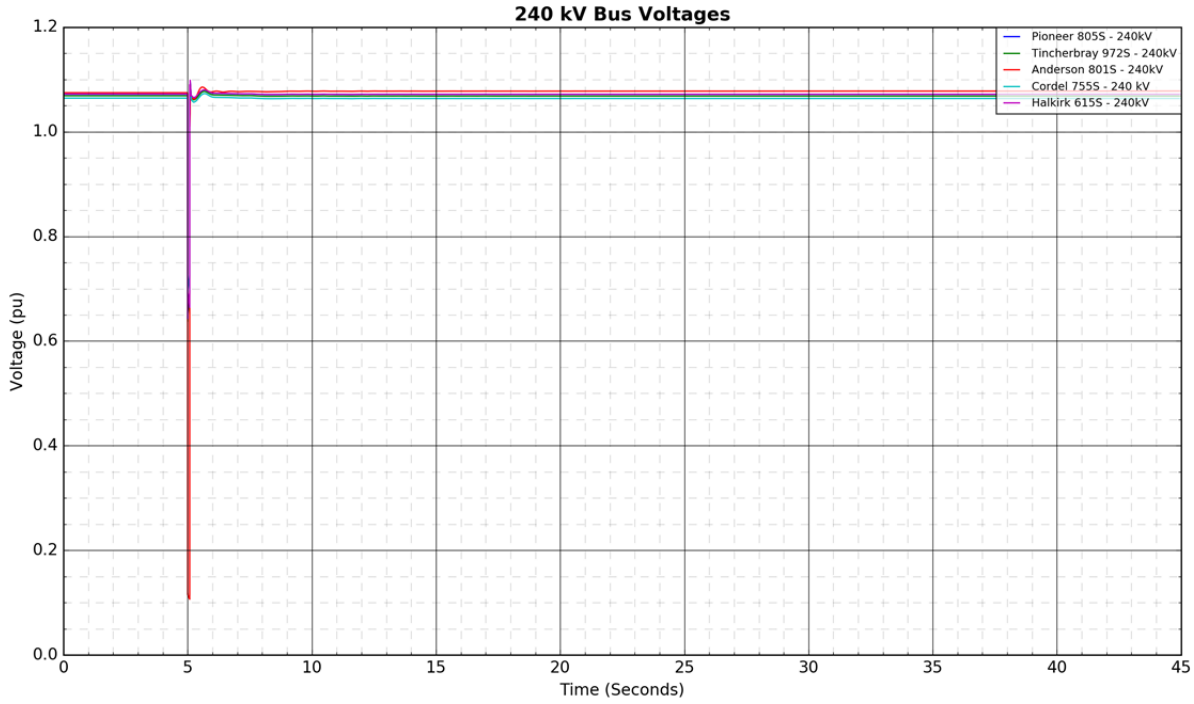

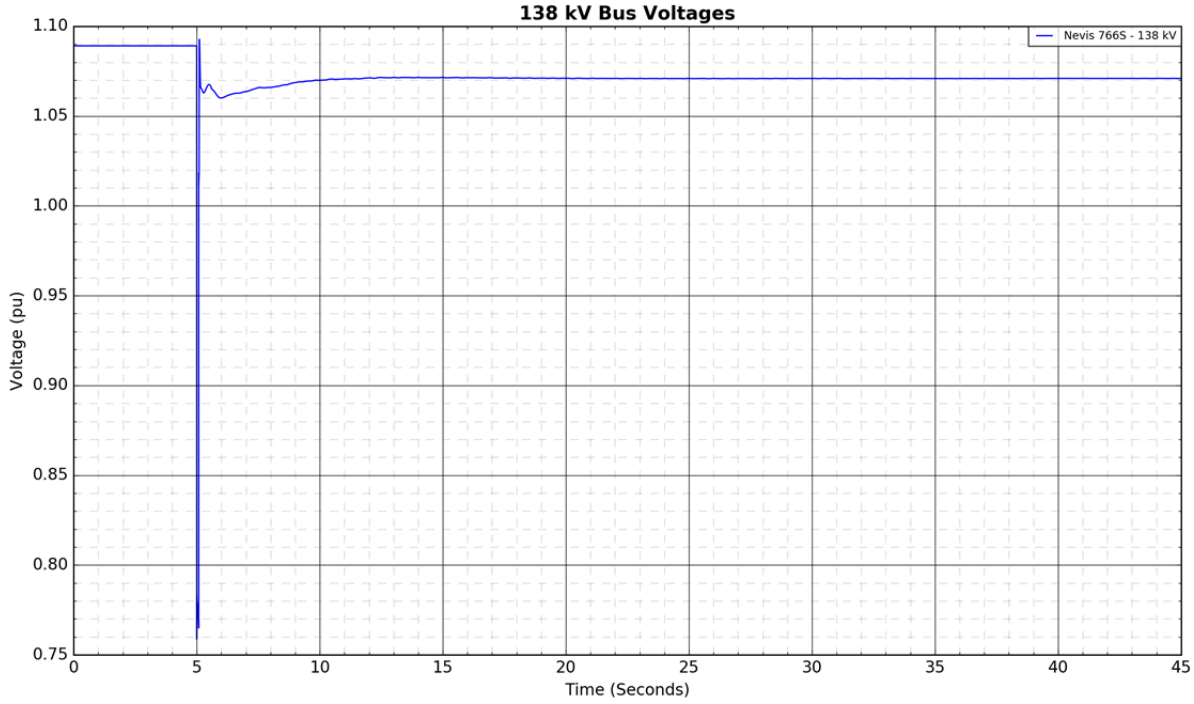

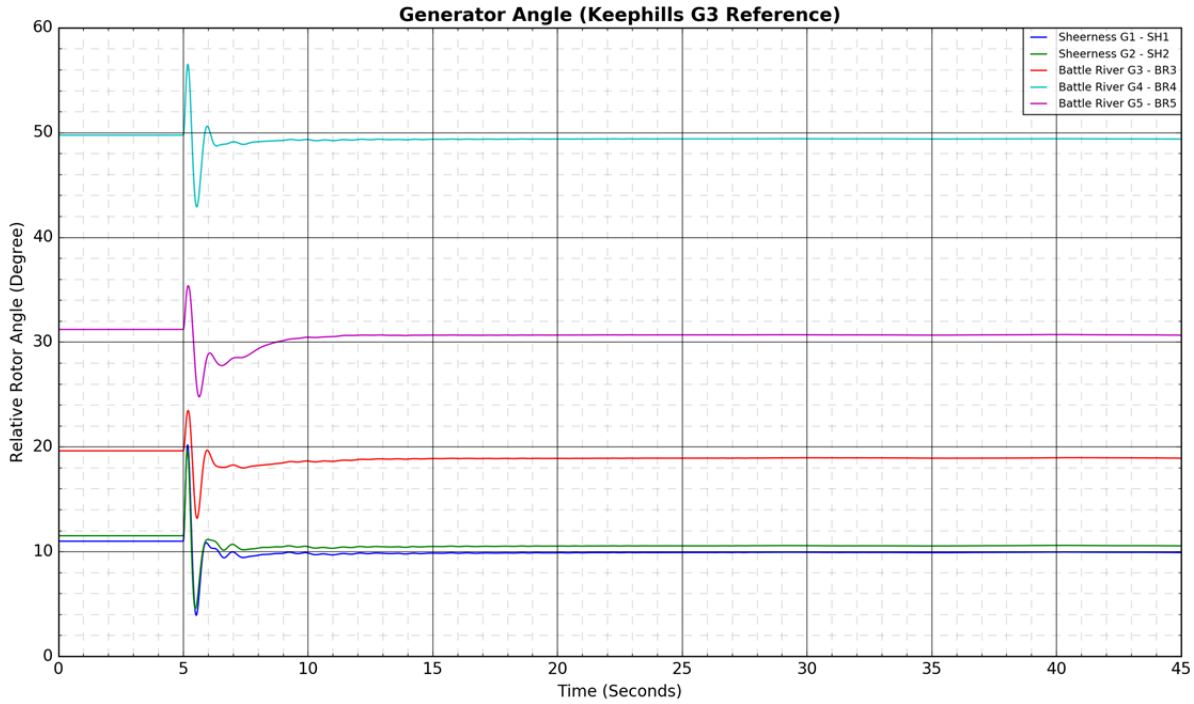
Generator Angle (Keephills G3 Reference)
Relative Rotor Angle (Degree)
Time (Seconds)
Sheerness G1 - SH1
Sheerness G2 - SH2
Battle River G3 - BR3
Battle River G4 - BR4
Battle River G5 - BR5
0
10
20
30
40
50
60
0
5
10
15
20
25
30
35
40
45

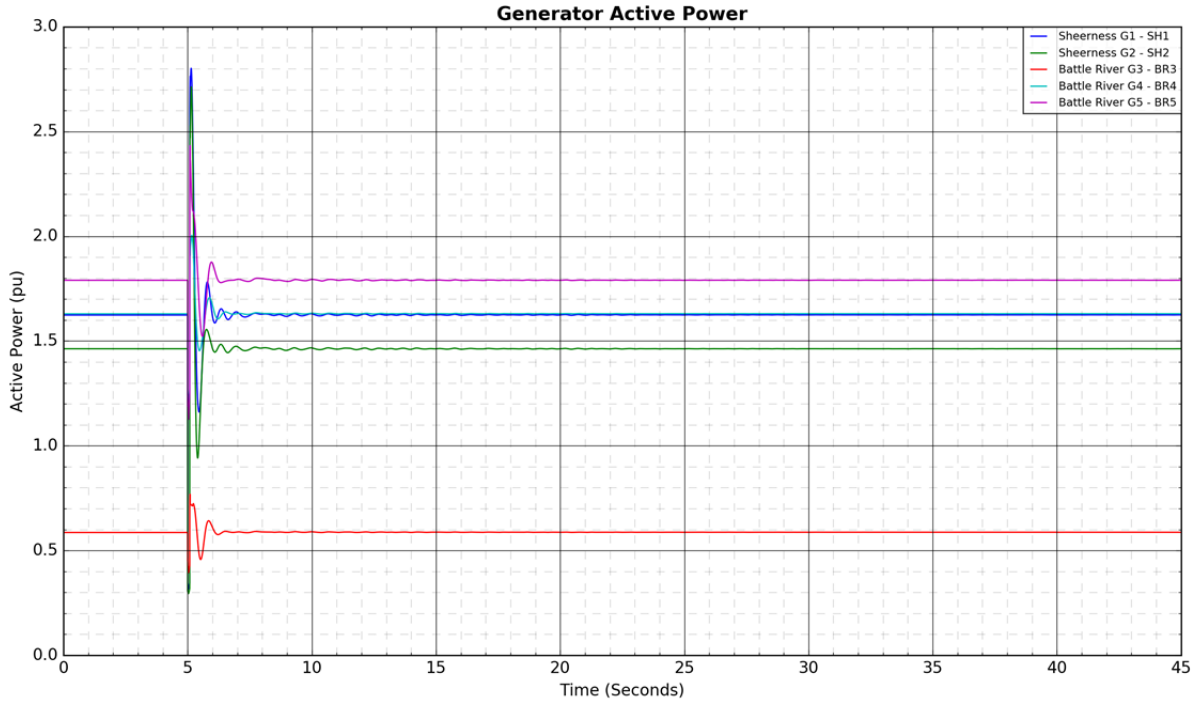
Generator Active Power
Active Power (pu)
Time (Seconds)
Sheerness G1 - SH1
Sheerness G2 - SH2
Battle River G3 - BR3
Battle River G4 - BR4
Battle River G5 - BR5
0.0
0.5
1.0
1.5
2.0
2.5
3.0
0
5
10
15
20
25
30
35
40
45

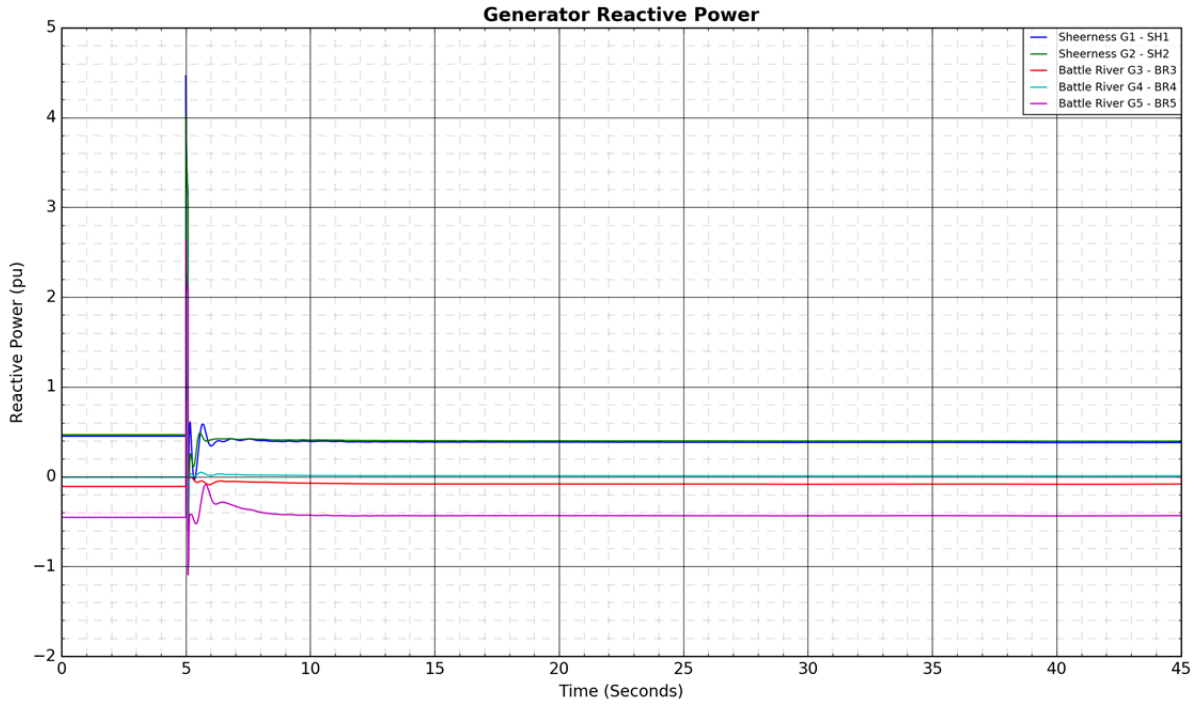
Generator Reactive Power
Sheerness G1 - SH1
Sheerness G2 - SH2
Battle River G3 - BR3
Battle River G4 - BR4
Battle River G5 - BR5
Reactive Power (pu)
Time (Seconds)

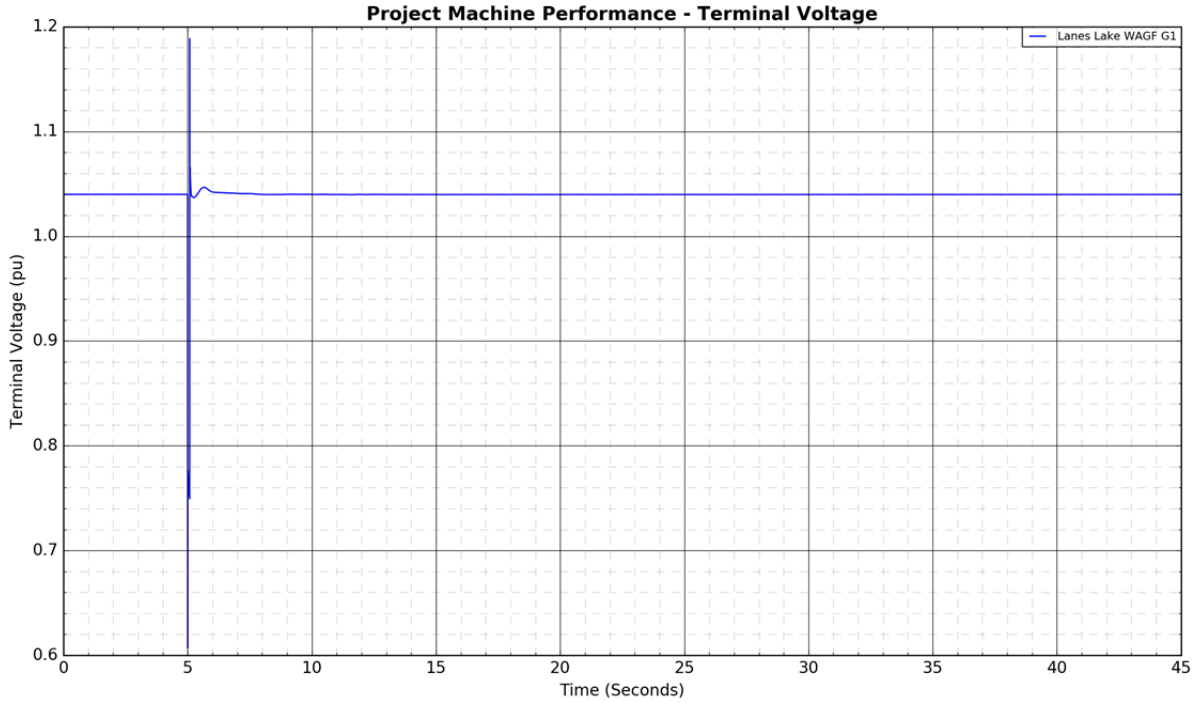
Project Machine Performance - Terminal Voltage
Lanes Lake WAGF G1
Terminal Voltage (pu)
Time (Seconds)


Project Machine Performance - Active Power
Lanes Lake WAGF G1
Active Power (pu)
Time (Seconds)
2.4
2.2
2.0
1.8
1.6
1.4
1.2
1.0
0.8
0
5
10
15
20
25
30
35
40
45

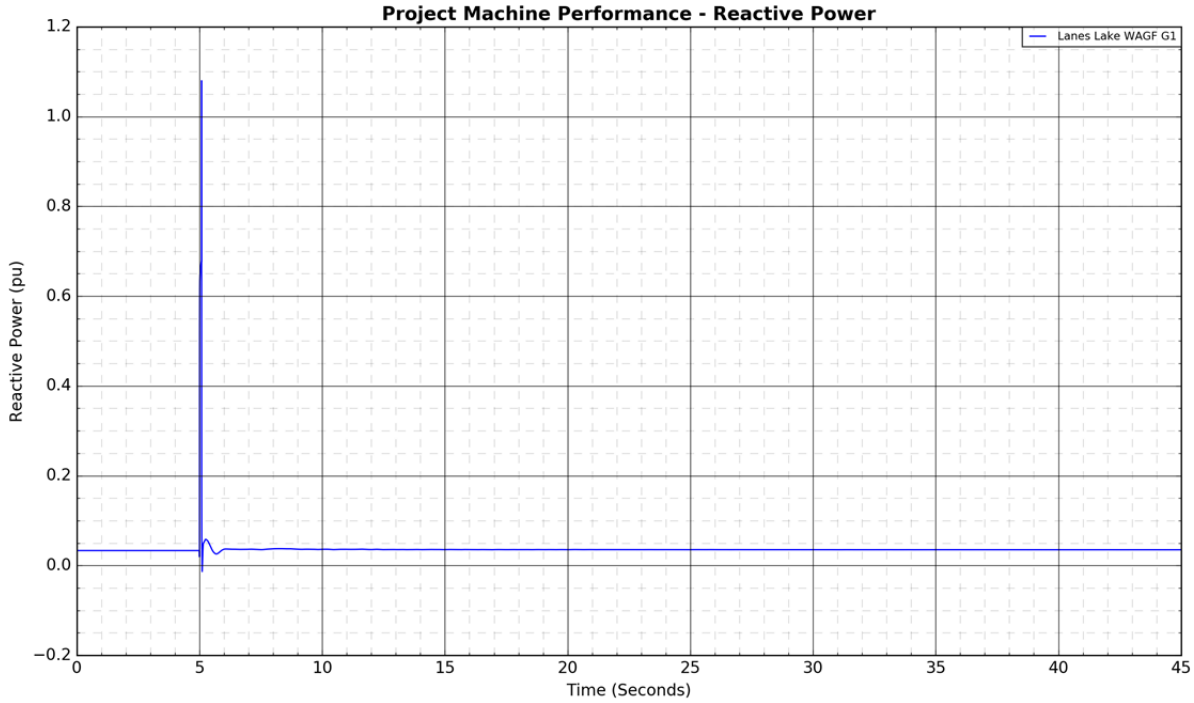
Project Machine Performance - Reactive Power
Lanes Lake WAGF G1
Reactive Power (pu)
Time (Seconds)
1.2
1.0
0.8
0.6
0.4
0.2
0.0
−0.2
0
5
10
15
20
25
30
35
40
45


Branch Active Power Flows
9L93 (Pioneer 805S - Halkirk 615S)
9L175 (Pioneer 805S - Tincherbray 972S)
9L16 (Tincherbray 972S - Cordel 755S)
9L59 (Anderson 801S - Tinchebray 972S)
Active Power (MW)
Time (Seconds)

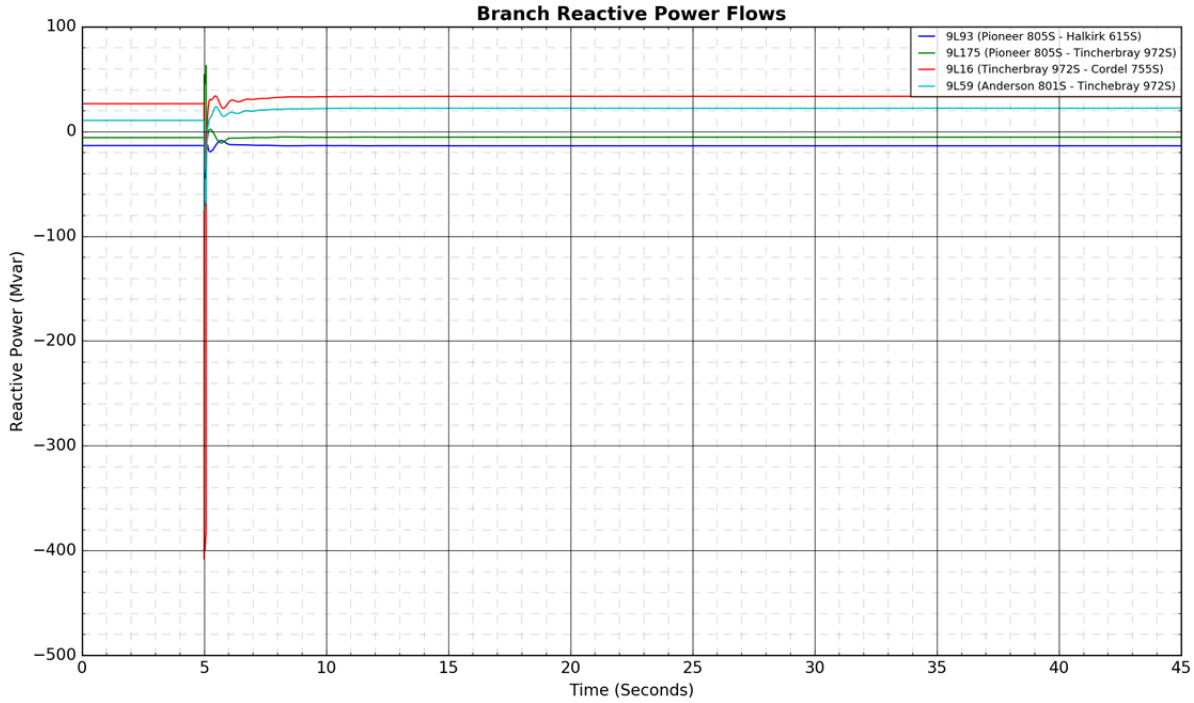
Branch Reactive Power Flows
9L93 (Pioneer 805S - Halkirk 615S)
9L175 (Pioneer 805S - Tincherbray 972S)
9L16 (Tincherbray 972S - Cordel 755S)
9L59 (Anderson 801S - Tinchebray 972S)
Reactive Power (Mvar)
Time (Seconds)

Figure A4-18: 9L29 (Oakland 946S - Coyote Lake 963S): 3-phase fault at Coyote Lake 963S

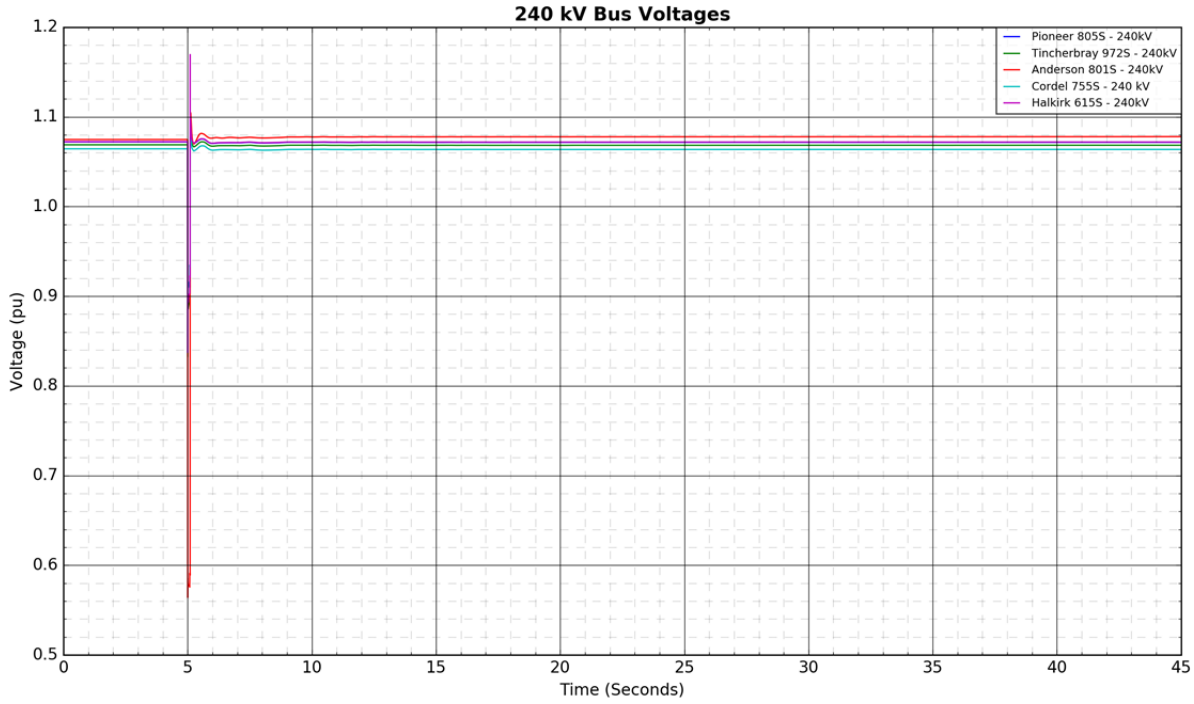

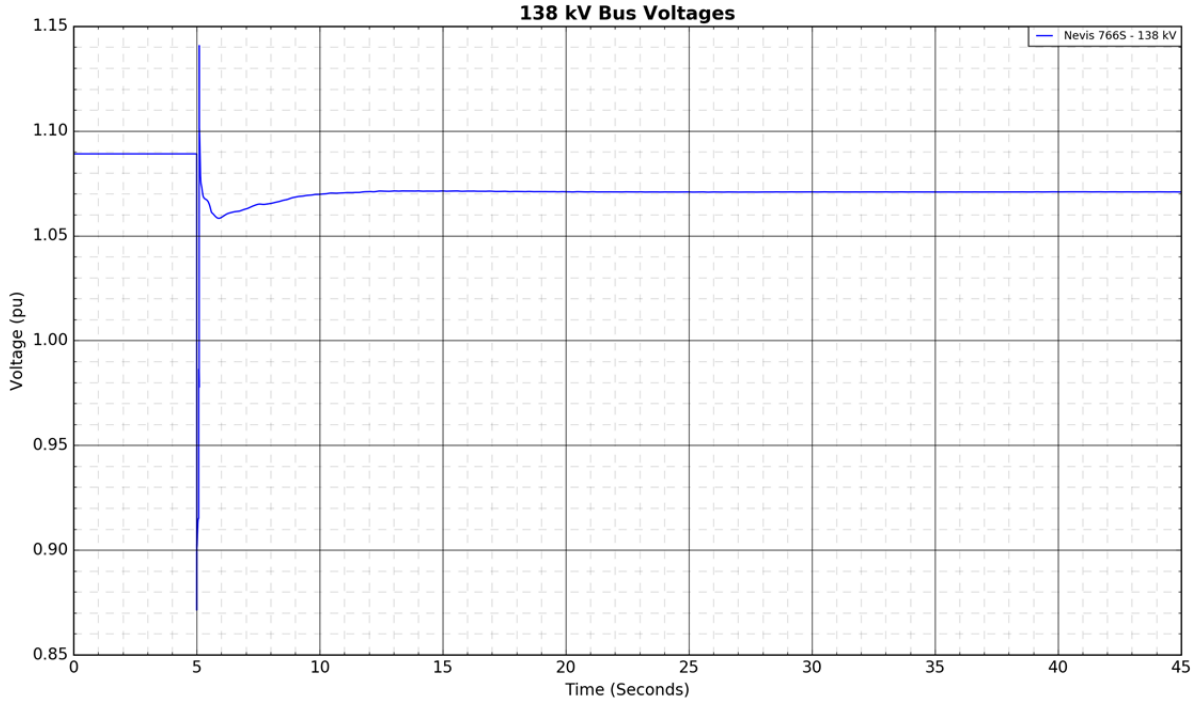

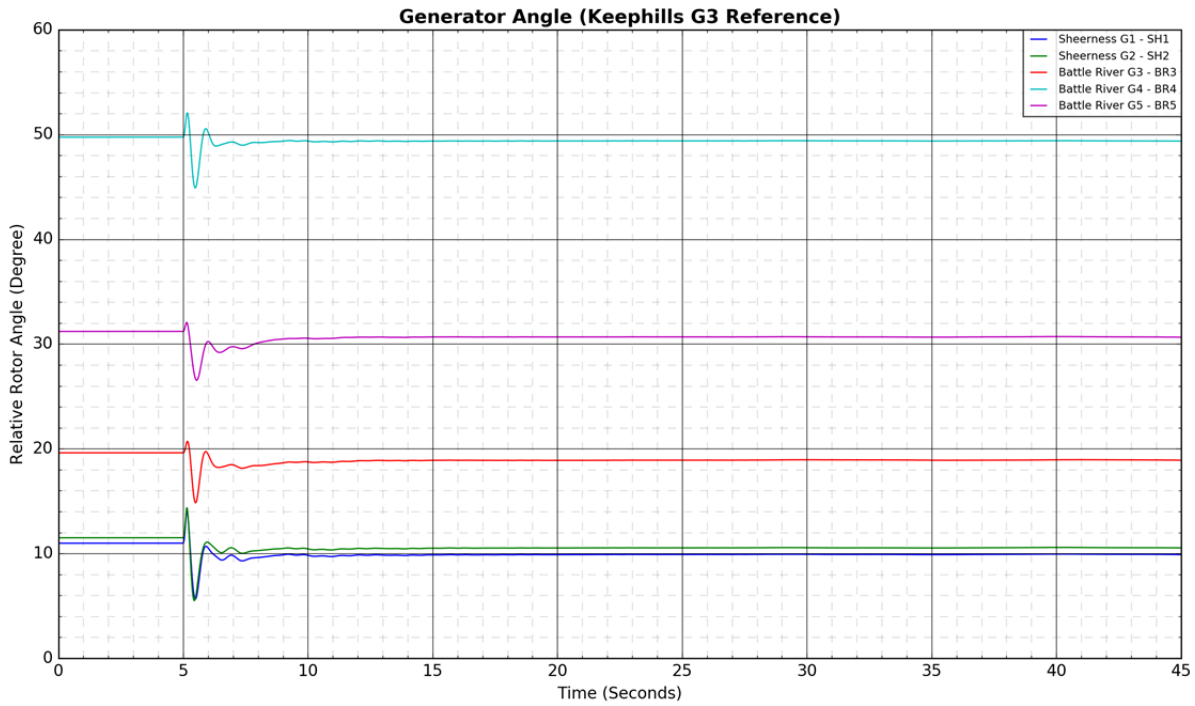
Generator Angle (Keephills G3 Reference)
Relative Rotor Angle (Degree)
Time (Seconds)
Sheerness G1 - SH1
Sheerness G2 - SH2
Battle River G3 - BR3
Battle River G4 - BR4
Battle River G5 - BR5
0
10
20
30
40
50
60
0
5
10
15
20
25
30
35
40
45

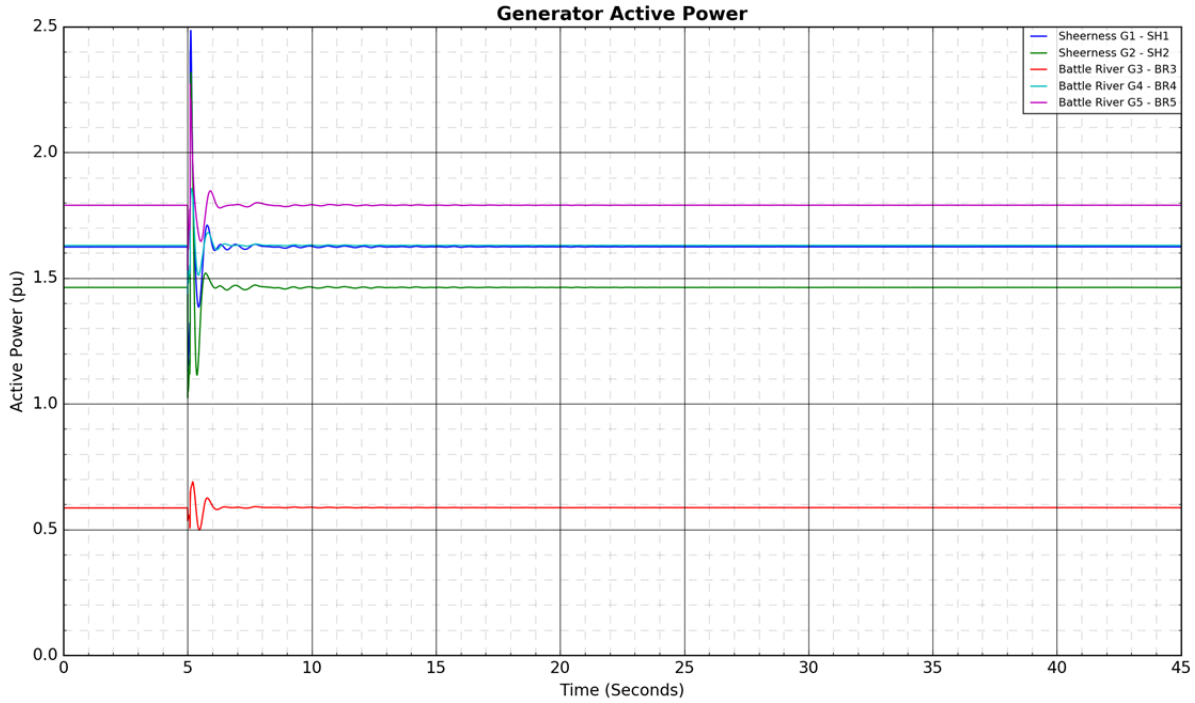
Generator Active Power
Active Power (pu)
Time (Seconds)
Sheerness G1 - SH1
Sheerness G2 - SH2
Battle River G3 - BR3
Battle River G4 - BR4
Battle River G5 - BR5
0.0
0.5
1.0
1.5
2.0
2.5
0
5
10
15
20
25
30
35
40
45

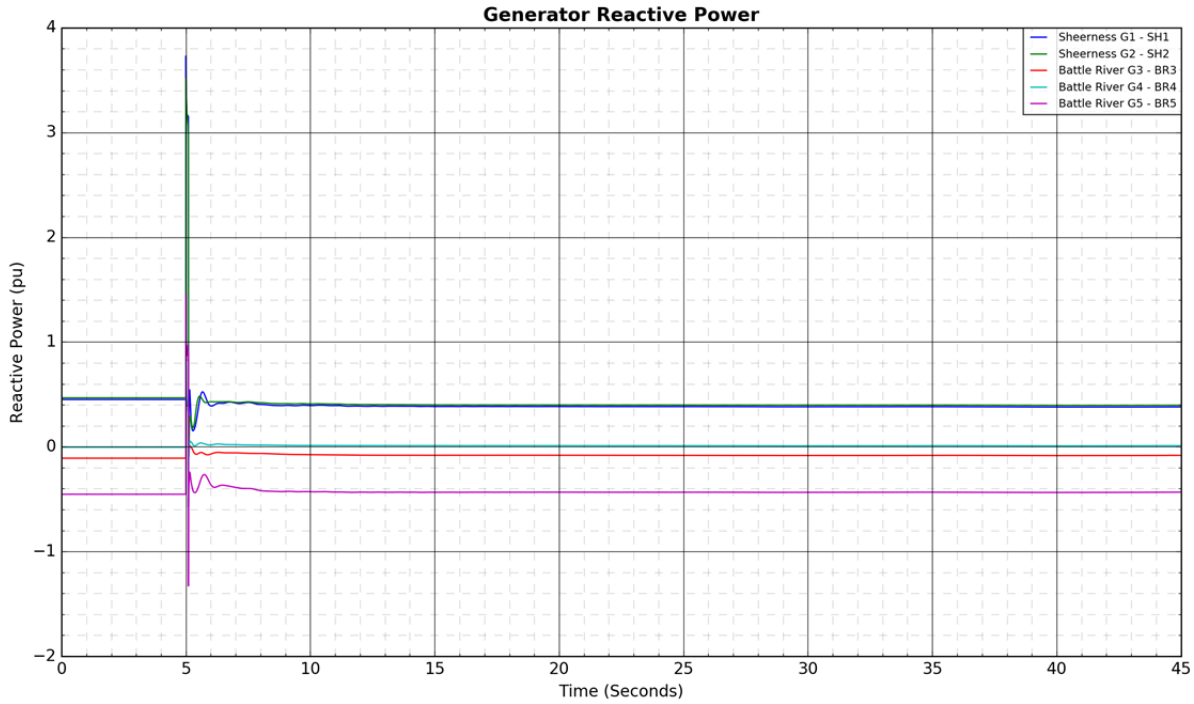
Generator Reactive Power
Sheerness G1 - SH1
Sheerness G2 - SH2
Battle River G3 - BR3
Battle River G4 - BR4
Battle River G5 - BR5
Reactive Power (pu)
Time (Seconds)

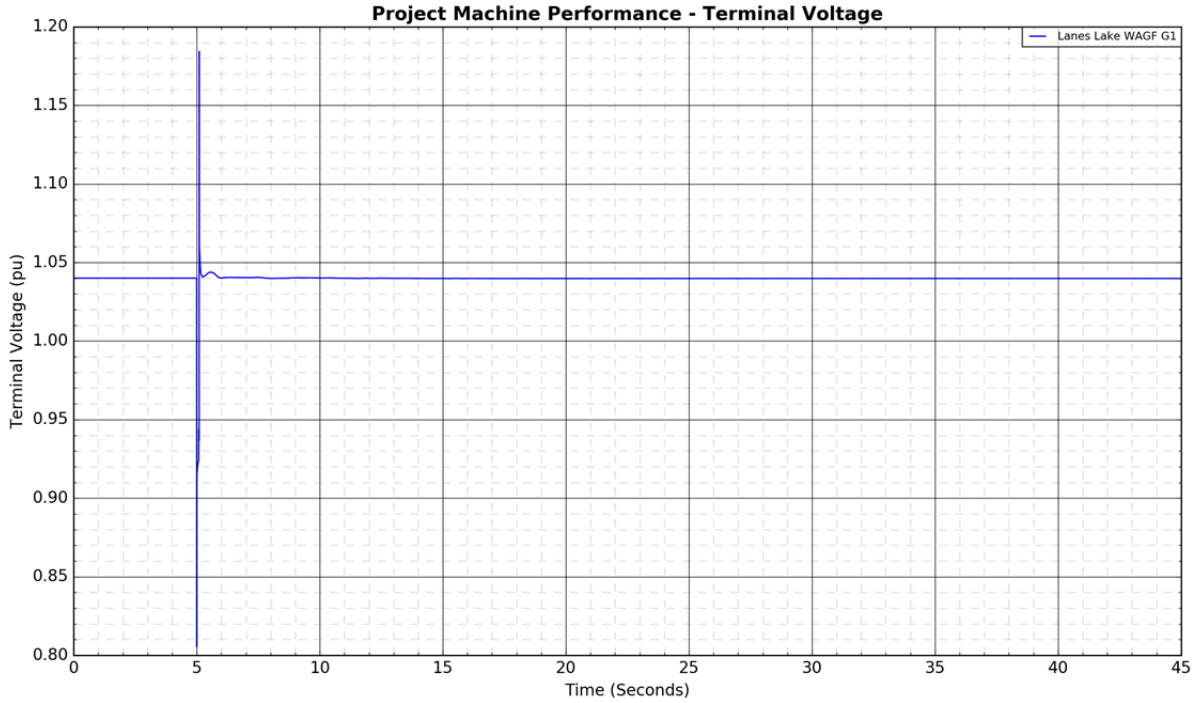
Project Machine Performance - Terminal Voltage
Lanes Lake WAGF G1
Terminal Voltage (pu)
Time (Seconds)


Project Machine Performance - Active Power
Lanes Lake WAGF G1
Active Power (pu)
1.9
1.8
1.7
1.6
1.5
1.4
1.3
1.2
1.1
0
5
10
15
20
25
30
35
40
45
Time (Seconds)

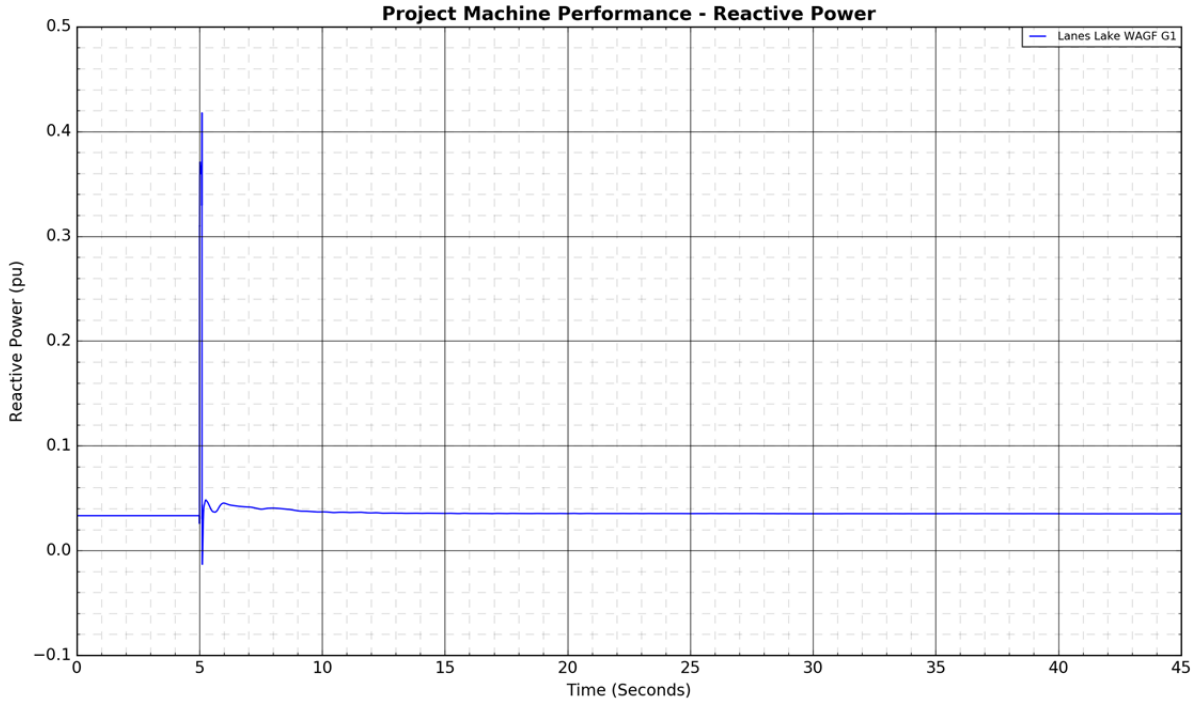
Project Machine Performance - Reactive Power
Lanes Lake WAGF G1
Reactive Power (pu)
0.5
0.4
0.3
0.2
0.1
0.0
−0.1
0
5
10
15
20
25
30
35
40
45
Time (Seconds)


Branch Active Power Flows
9L93 (Pioneer 805S - Halkirk 615S)
9L175 (Pioneer 805S - Tincherbray 972S)
9L16 (Tincherbray 972S - Cordel 755S)
9L59 (Anderson 801S - Tinchebray 972S)
Active Power (MW)
Time (Seconds)

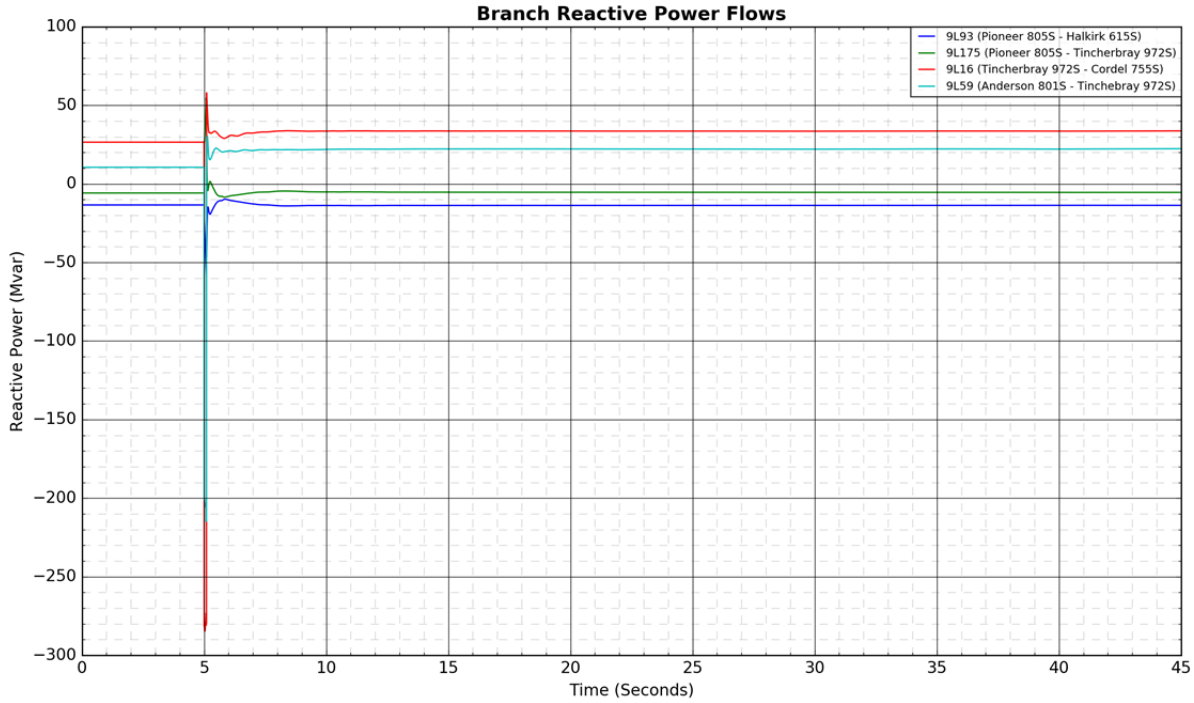
Branch Reactive Power Flows
9L93 (Pioneer 805S - Halkirk 615S)
9L175 (Pioneer 805S - Tincherbray 972S)
9L16 (Tincherbray 972S - Cordel 755S)
9L59 (Anderson 801S - Tinchebray 972S)
Reactive Power (Mvar)
Time (Seconds)

Figure A4-19: 9L20 (Cordel 755S - Nevis 766S): 3-phase fault at Cordel 755S



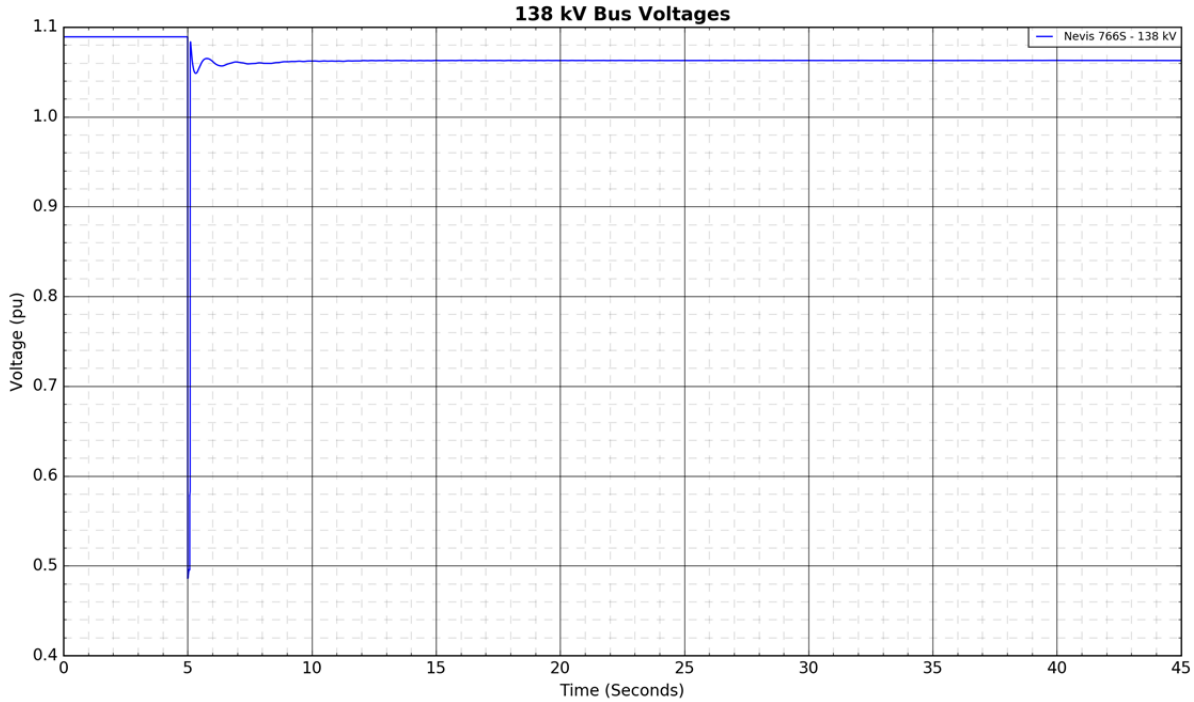

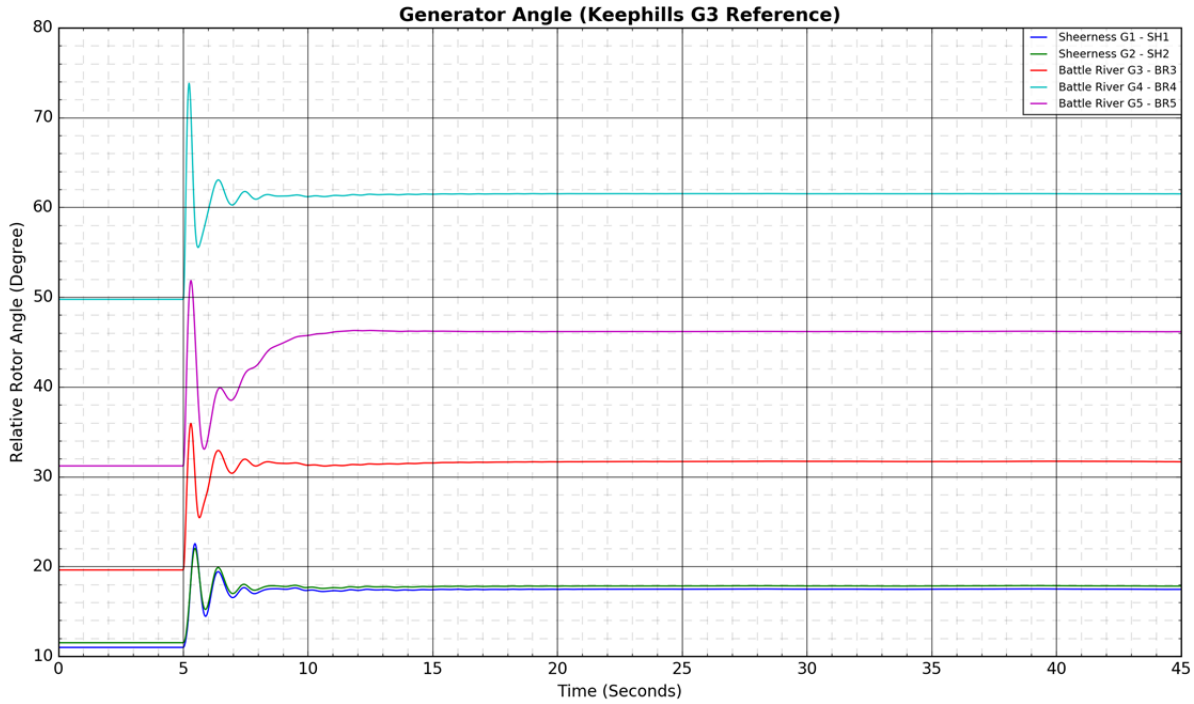
Generator Angle (Keephills G3 Reference)
Relative Rotor Angle (Degree)
Time (Seconds)
Sheerness G1 - SH1
Sheerness G2 - SH2
Battle River G3 - BR3
Battle River G4 - BR4
Battle River G5 - BR5

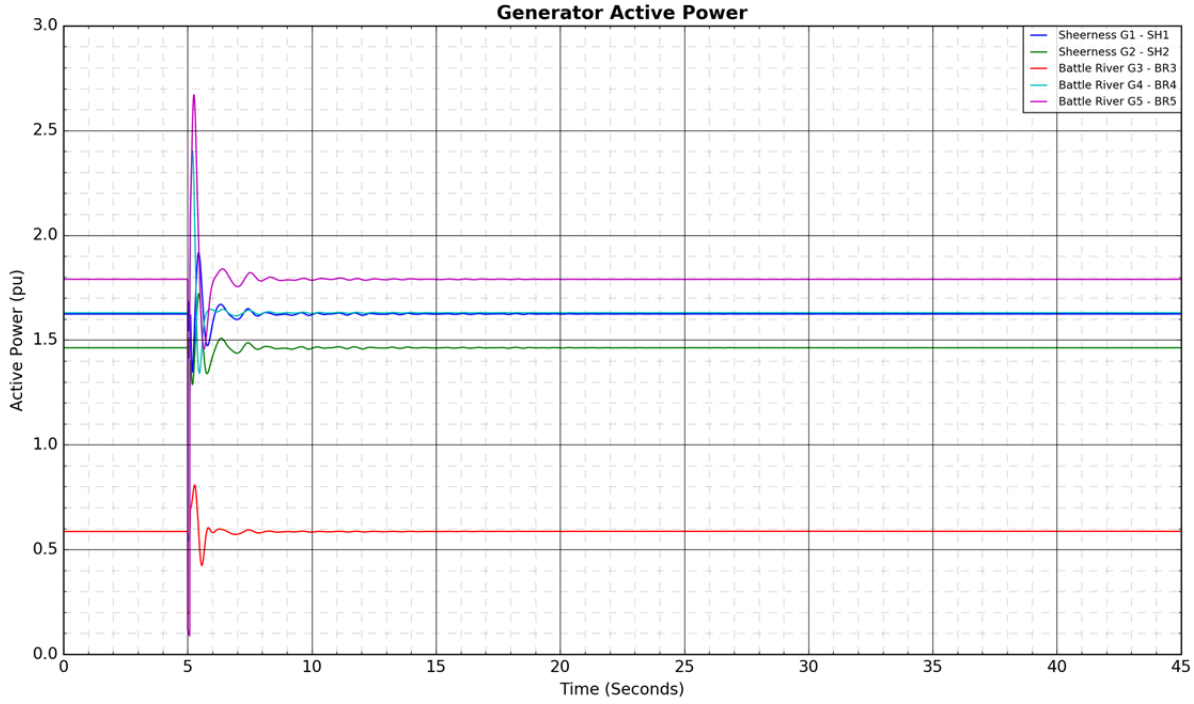
Generator Active Power
Active Power (pu)
Time (Seconds)
Sheerness G1 - SH1
Sheerness G2 - SH2
Battle River G3 - BR3
Battle River G4 - BR4
Battle River G5 - BR5

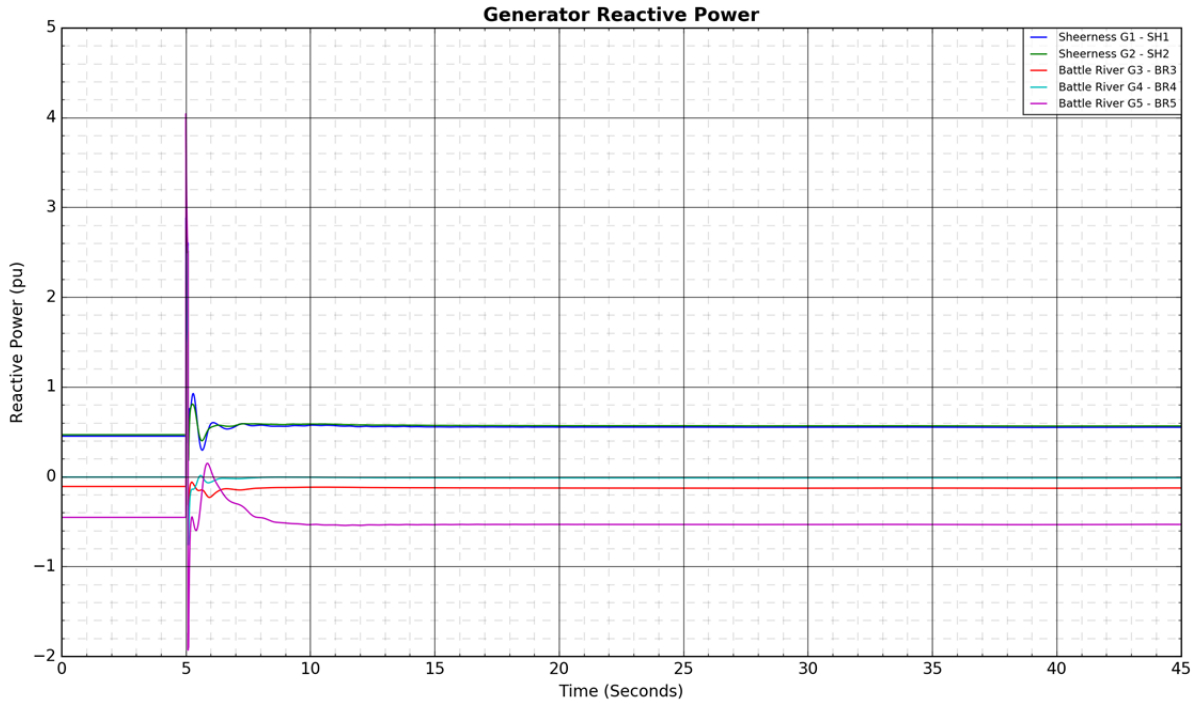
Generator Reactive Power
Sheerness G1 - SH1
Sheerness G2 - SH2
Battle River G3 - BR3
Battle River G4 - BR4
Battle River G5 - BR5
Reactive Power (pu)
Time (Seconds)

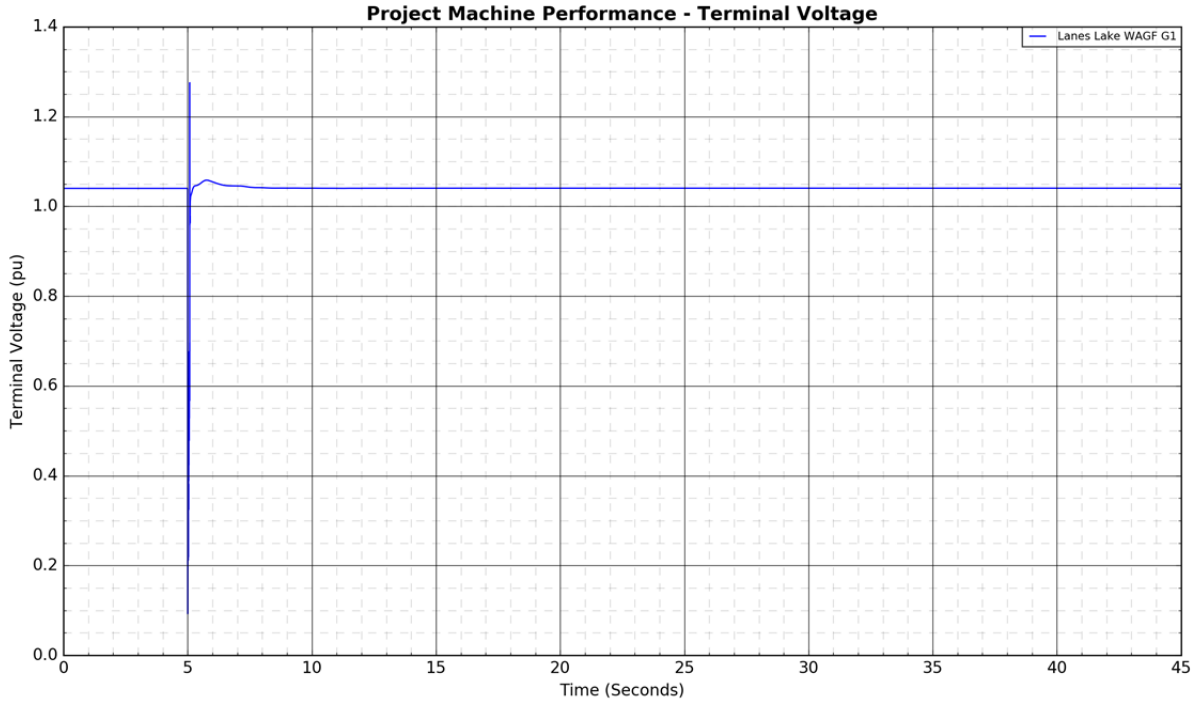
Project Machine Performance - Terminal Voltage
Lanes Lake WAGF G1
Terminal Voltage (pu)
Time (Seconds)


Project Machine Performance - Active Power
Lanes Lake WAGF G1
Active Power (pu)
Time (Seconds)
0.0
0.5
1.0
1.5
2.0
2.5
0
5
10
15
20
25
30
35
40
45

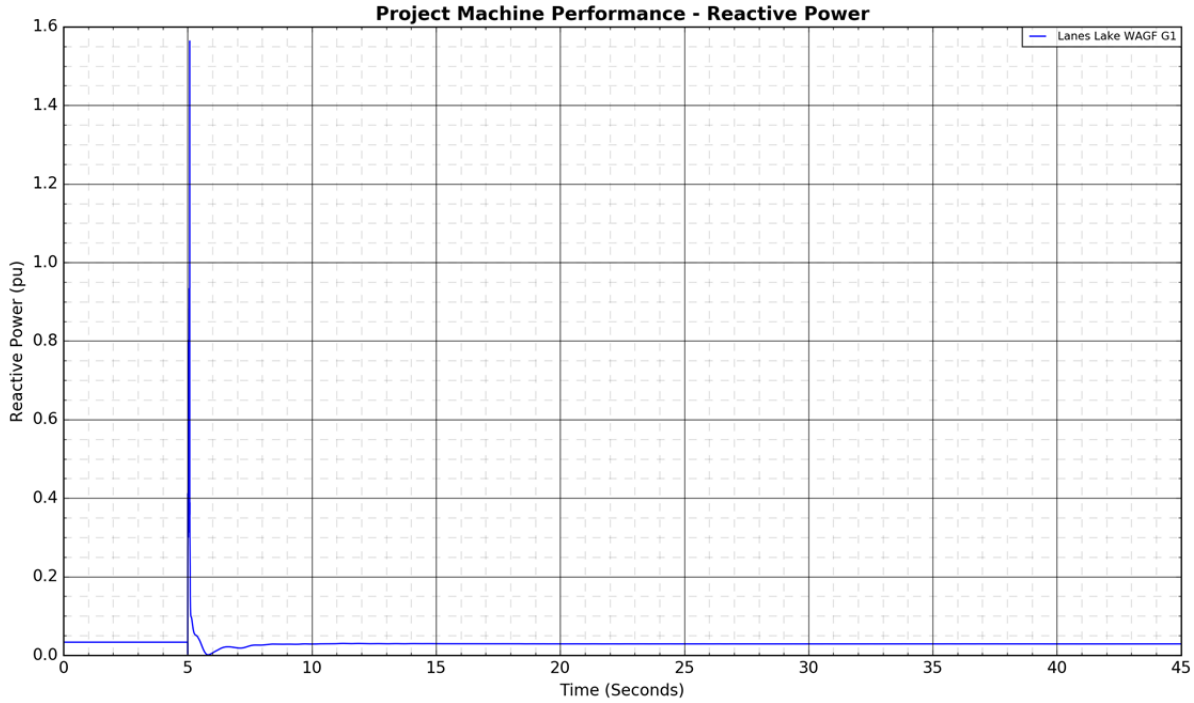
Project Machine Performance - Reactive Power
Lanes Lake WAGF G1
Reactive Power (pu)
Time (Seconds)
0.0
0.2
0.4
0.6
0.8
1.0
1.2
1.4
1.6
0
5
10
15
20
25
30
35
40
45

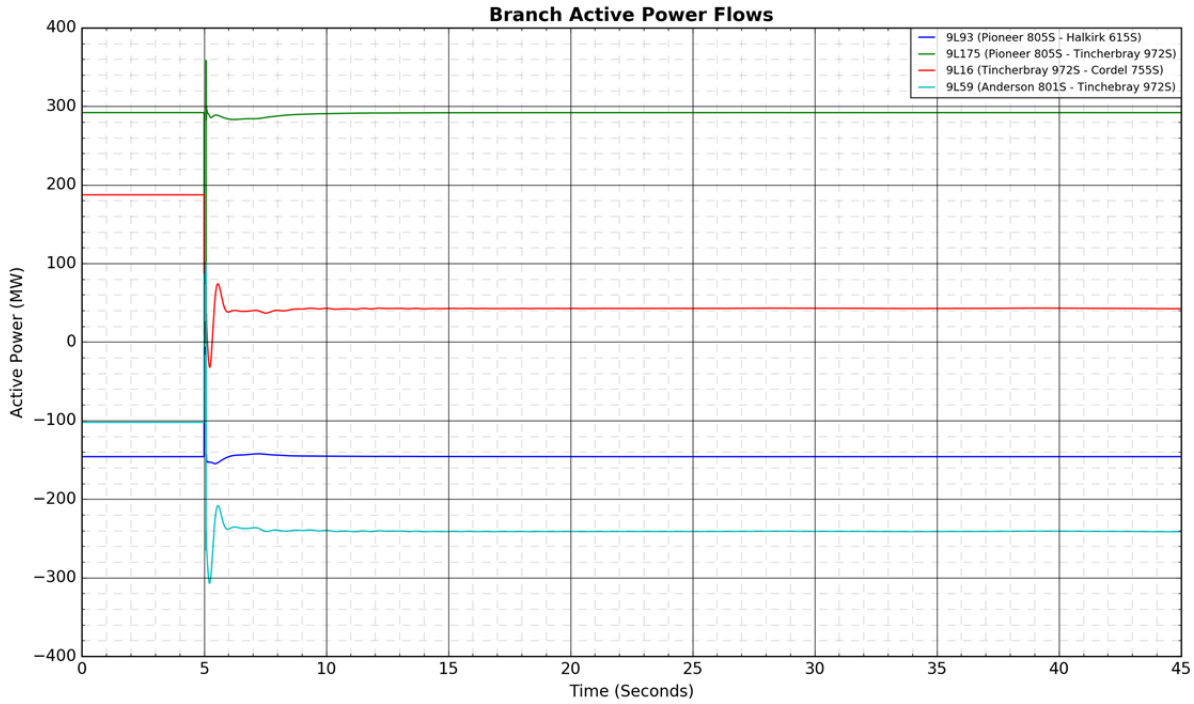
Branch Active Power Flows
9L93 (Pioneer 805S - Halkirk 615S)
9L175 (Pioneer 805S - Tincherbray 972S)
9L16 (Tincherbray 972S - Cordel 755S)
9L59 (Anderson 801S - Tinchebray 972S)
Active Power (MW)
Time (Seconds)

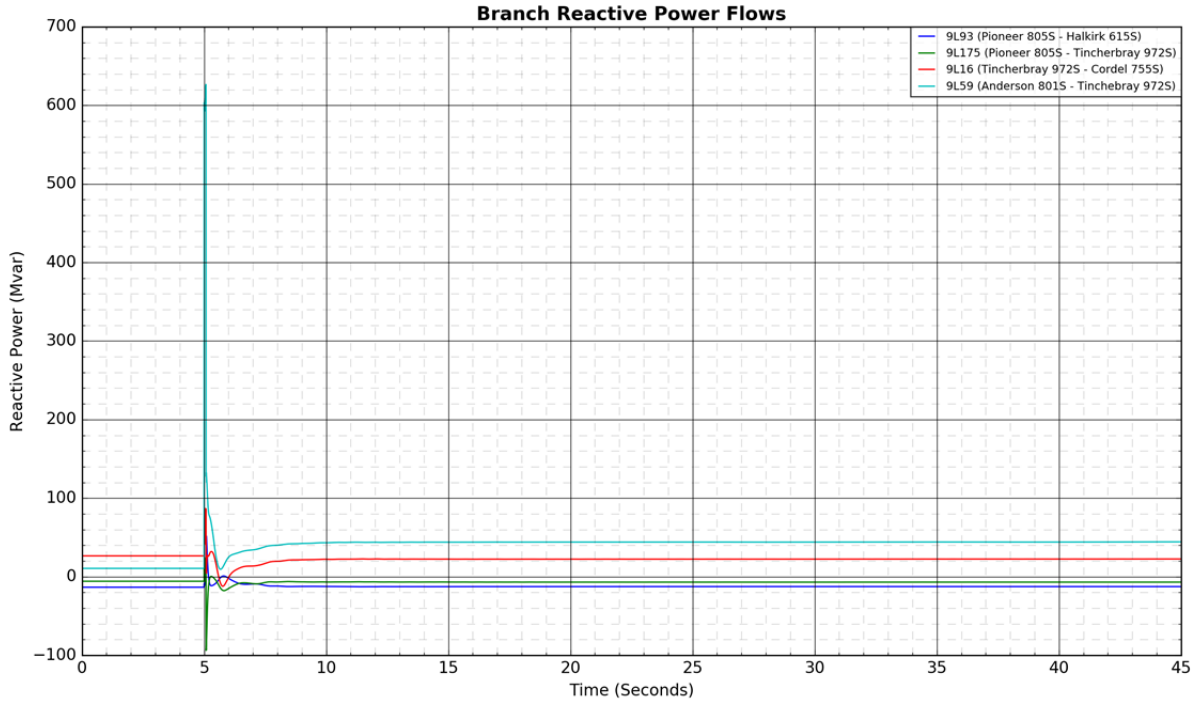
Branch Reactive Power Flows
9L93 (Pioneer 805S - Halkirk 615S)
9L175 (Pioneer 805S - Tincherbray 972S)
9L16 (Tincherbray 972S - Cordel 755S)
9L59 (Anderson 801S - Tinchebray 972S)
Reactive Power (Mvar)
Time (Seconds)

Figure A4-20: 9L20 (Cordel 755S - Nevis 766S): 3-phase fault at Nevis 766S

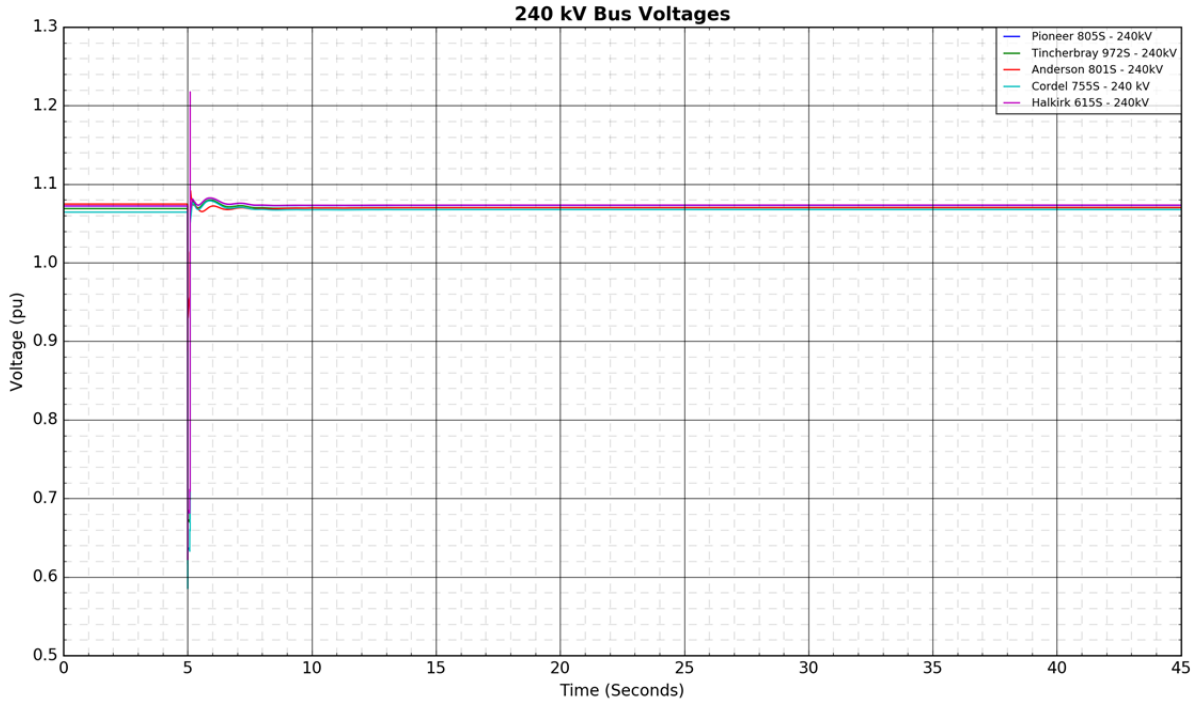

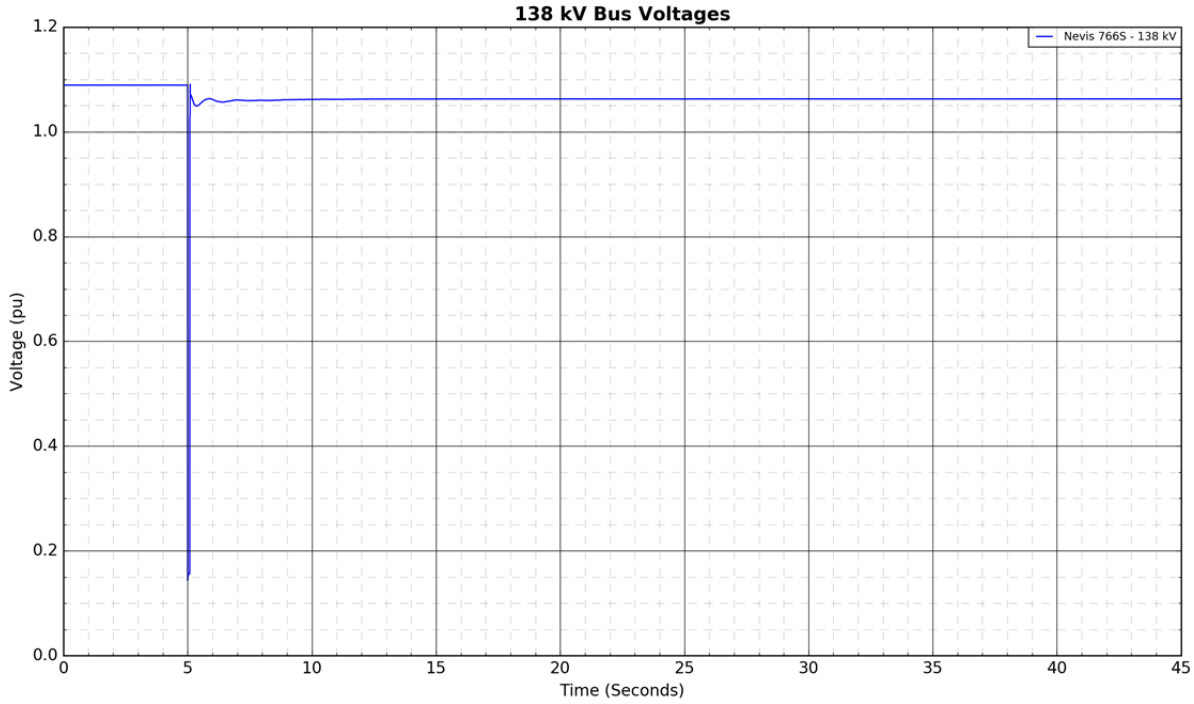

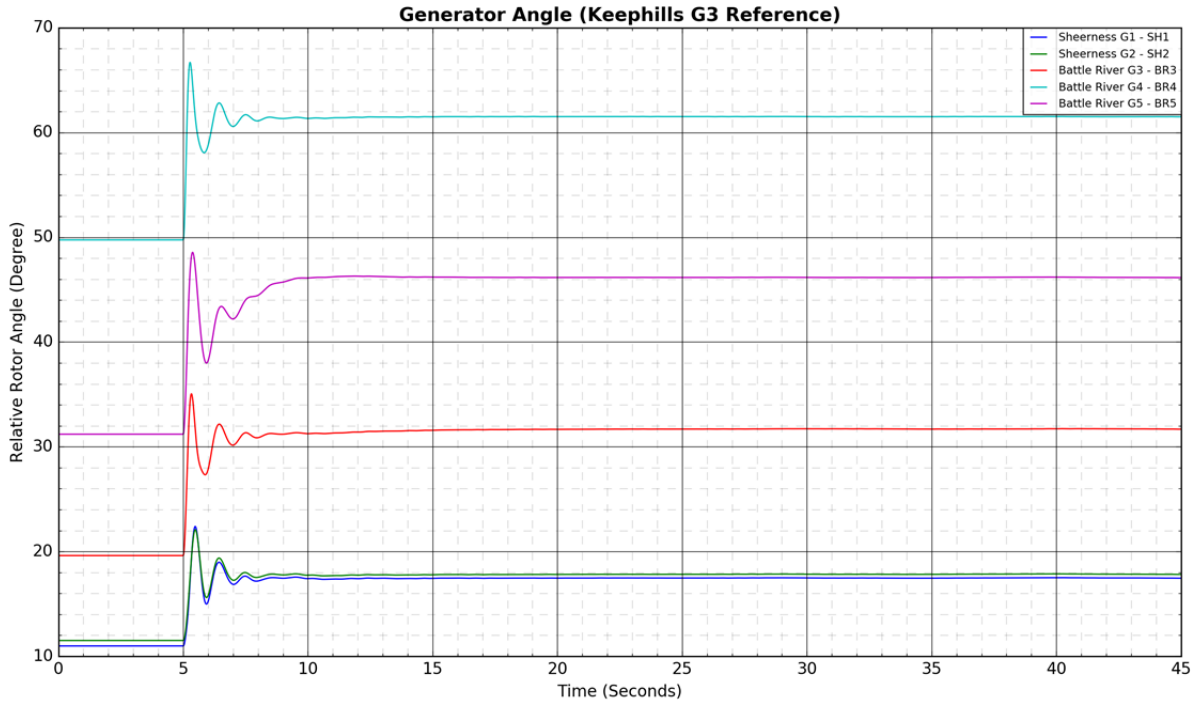
Generator Angle (Keephills G3 Reference)
Relative Rotor Angle (Degree)
Time (Seconds)
Sheerness G1 - SH1
Sheerness G2 - SH2
Battle River G3 - BR3
Battle River G4 - BR4
Battle River G5 - BR5

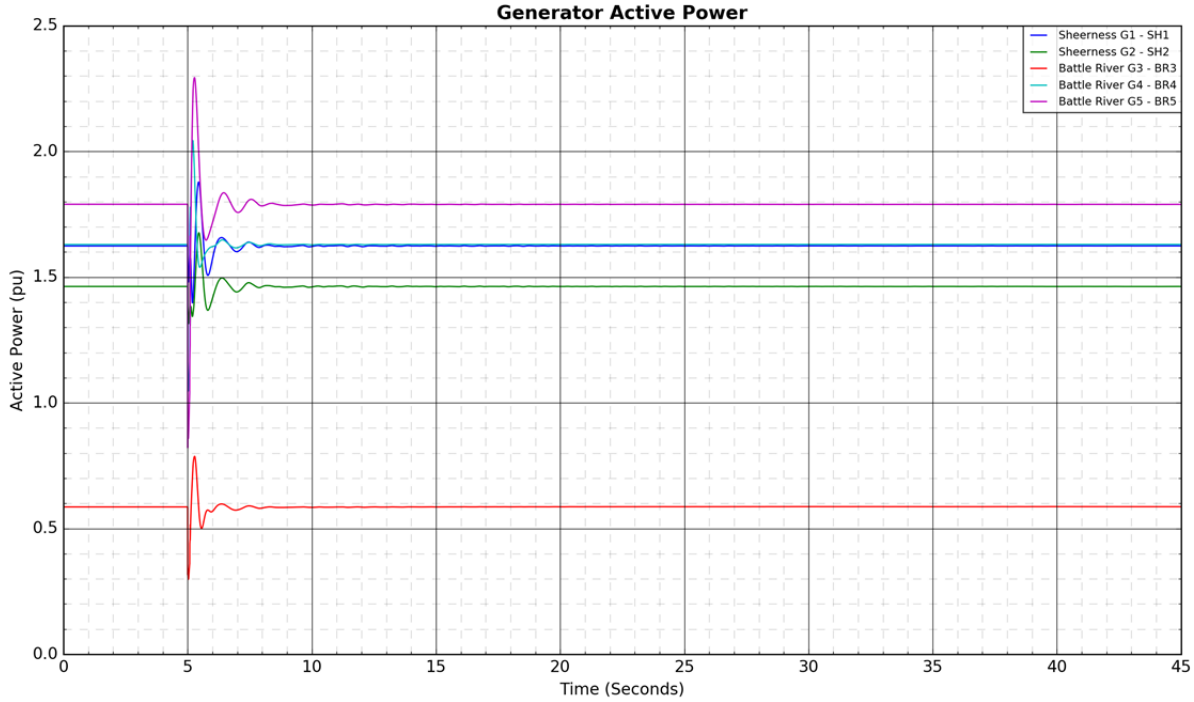
Generator Active Power
Active Power (pu)
Time (Seconds)
Sheerness G1 - SH1
Sheerness G2 - SH2
Battle River G3 - BR3
Battle River G4 - BR4
Battle River G5 - BR5

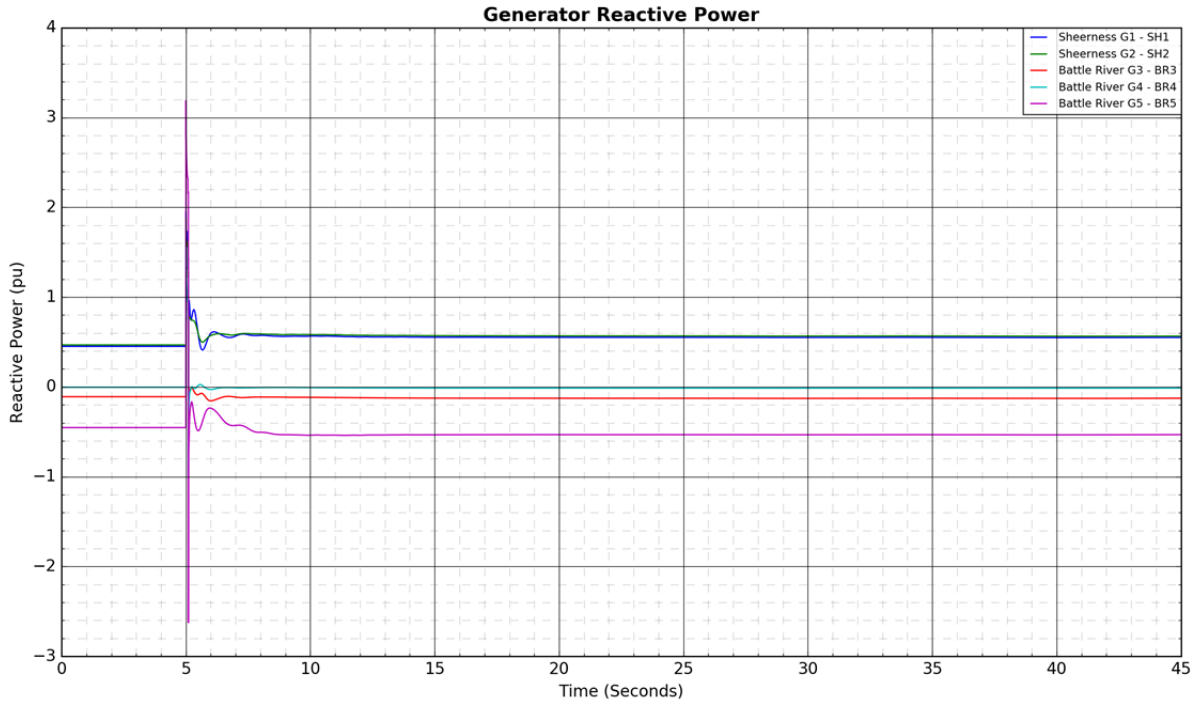
Generator Reactive Power
Sheerness G1 - SH1
Sheerness G2 - SH2
Battle River G3 - BR3
Battle River G4 - BR4
Battle River G5 - BR5
Reactive Power (pu)
Time (Seconds)

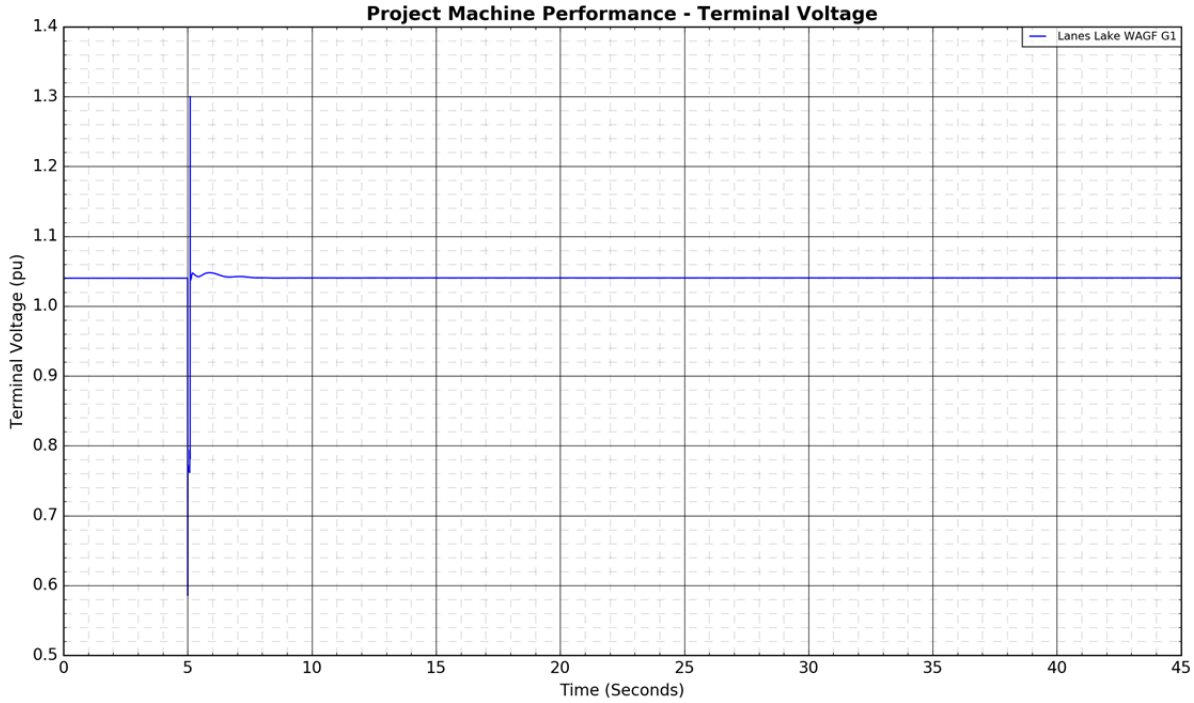
Project Machine Performance - Terminal Voltage
Lanes Lake WAGF G1
Terminal Voltage (pu)
Time (Seconds)


Project Machine Performance - Active Power
Lanes Lake WAGF G1
Active Power (pu)
Time (Seconds)
2.6
2.4
2.2
2.0
1.8
1.6
1.4
1.2
1.0
0.8
0
5
10
15
20
25
30
35
40
45

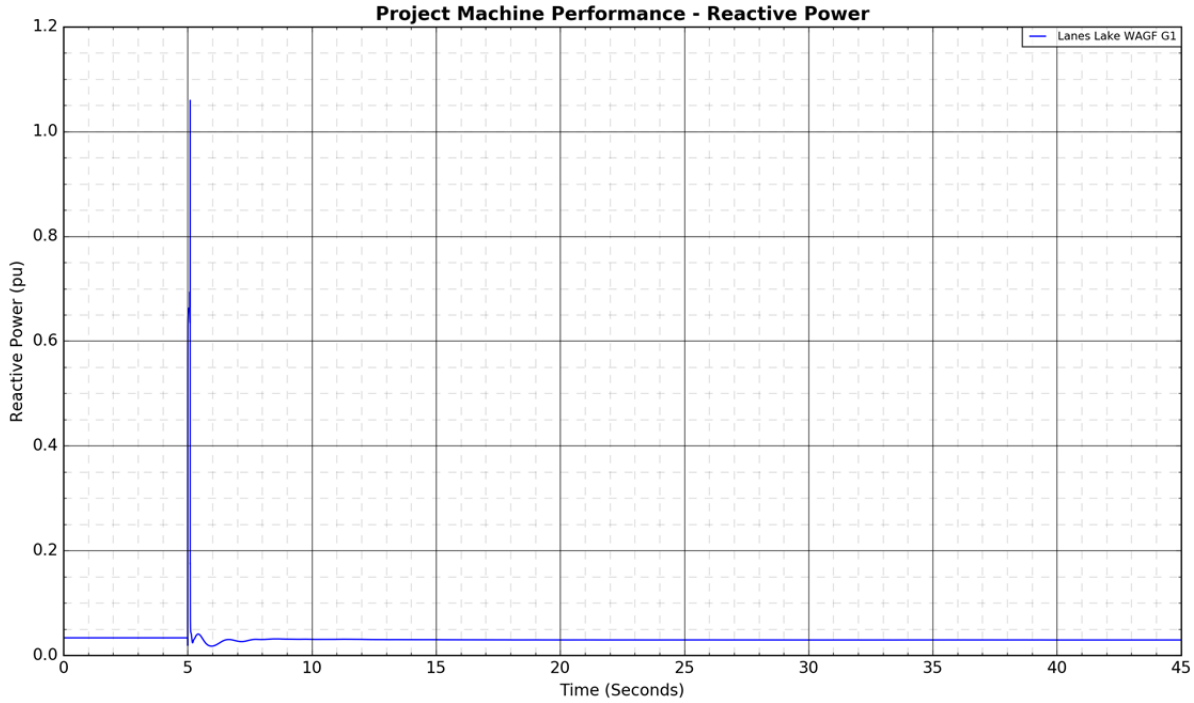
Project Machine Performance - Reactive Power
Lanes Lake WAGF G1
Reactive Power (pu)
Time (Seconds)
1.2
1.0
0.8
0.6
0.4
0.2
0.0
0
5
10
15
20
25
30
35
40
45

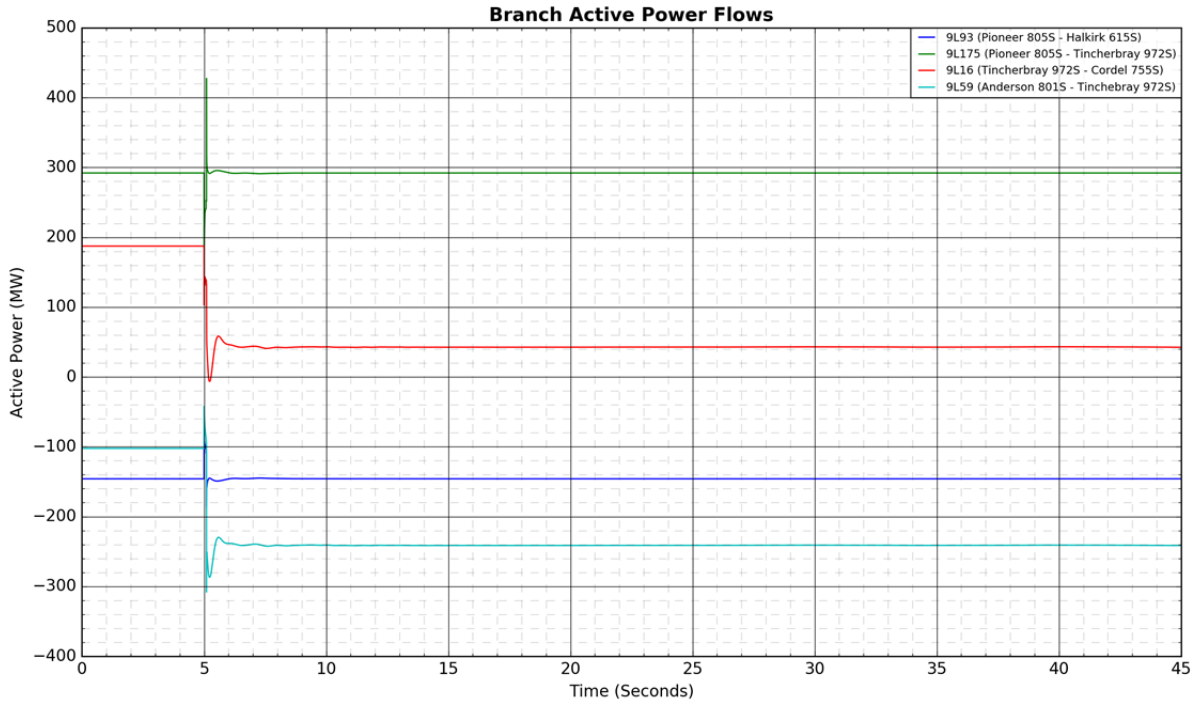
Branch Active Power Flows
9L93 (Pioneer 805S - Halkirk 615S)
9L175 (Pioneer 805S - Tincherbray 972S)
9L16 (Tincherbray 972S - Cordel 755S)
9L59 (Anderson 801S - Tinchebray 972S)
Active Power (MW)
Time (Seconds)

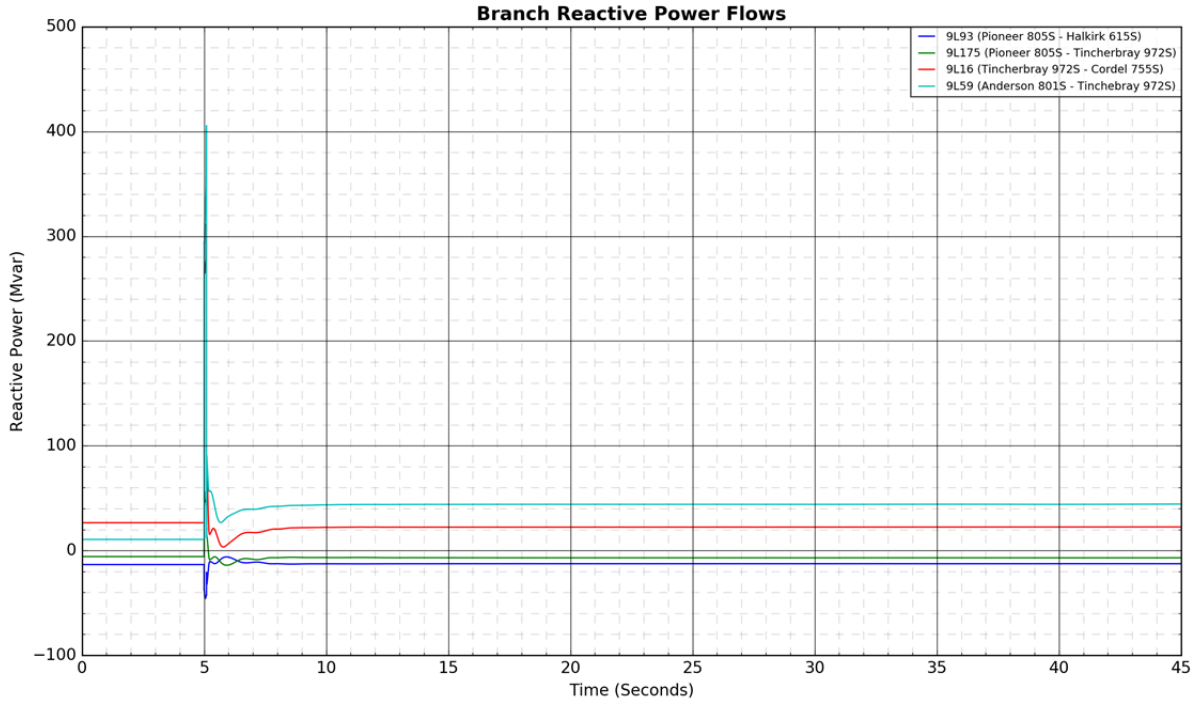
Branch Reactive Power Flows
9L93 (Pioneer 805S - Halkirk 615S)
9L175 (Pioneer 805S - Tincherbray 972S)
9L16 (Tincherbray 972S - Cordel 755S)
9L59 (Anderson 801S - Tinchebray 972S)
Reactive Power (Mvar)
Time (Seconds)

Figure A4-21: 9L16 (Tinchebray 972S - Cordel 755S): 3-phase fault at Cordel 755S

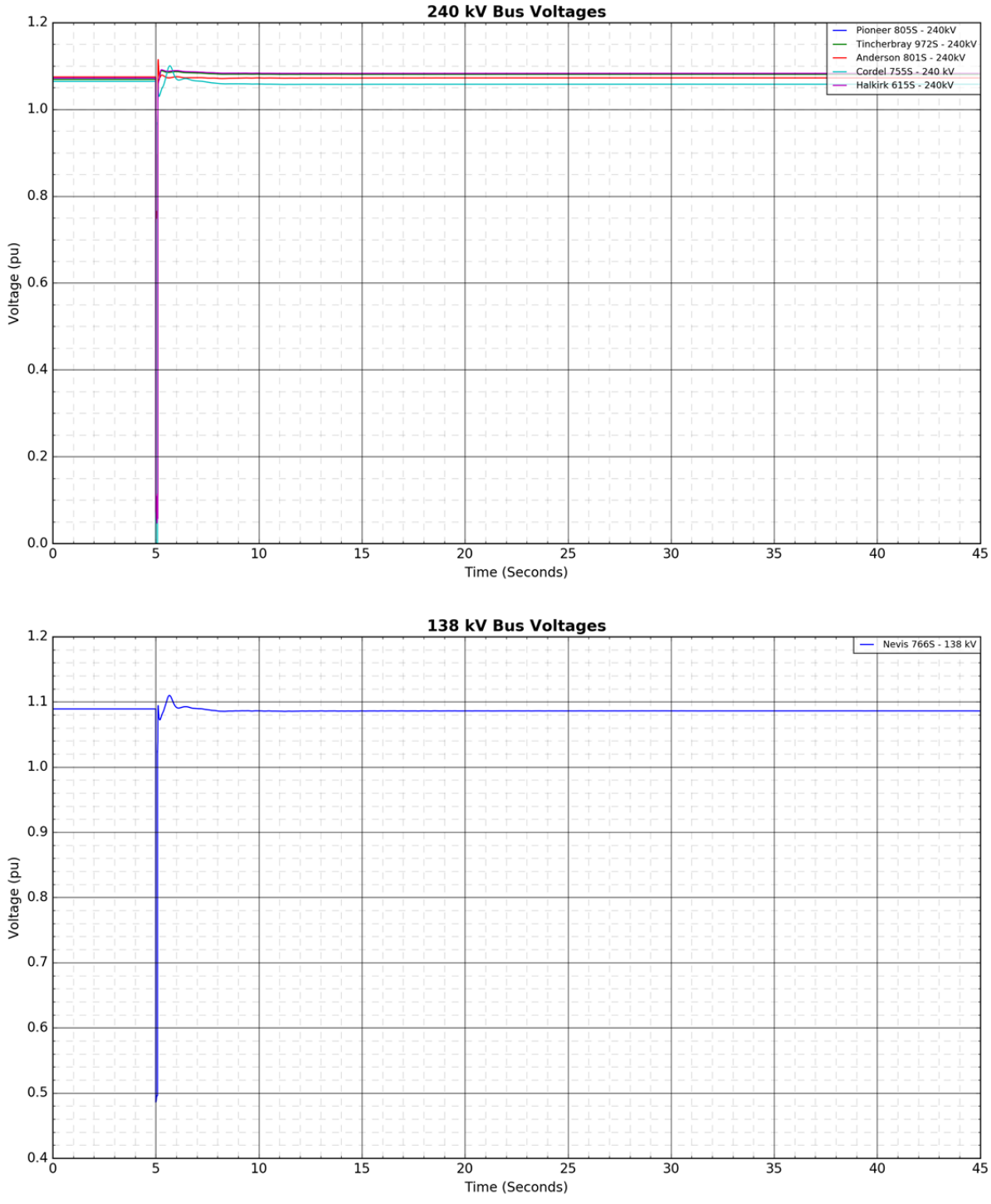

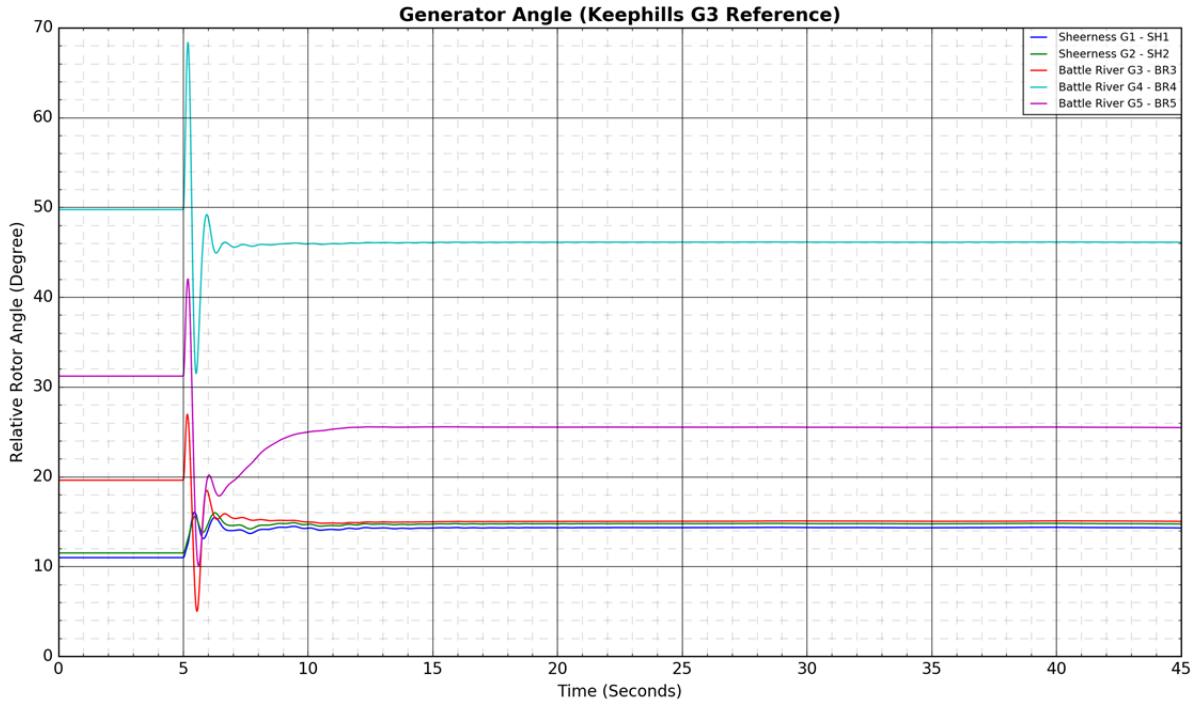
Generator Angle (Keephills G3 Reference)
Relative Rotor Angle (Degree)
Time (Seconds)
Sheerness G1 - SH1
Sheerness G2 - SH2
Battle River G3 - BR3
Battle River G4 - BR4
Battle River G5 - BR5
0
10
20
30
40
50
60
70
0
5
10
15
20
25
30
35
40
45

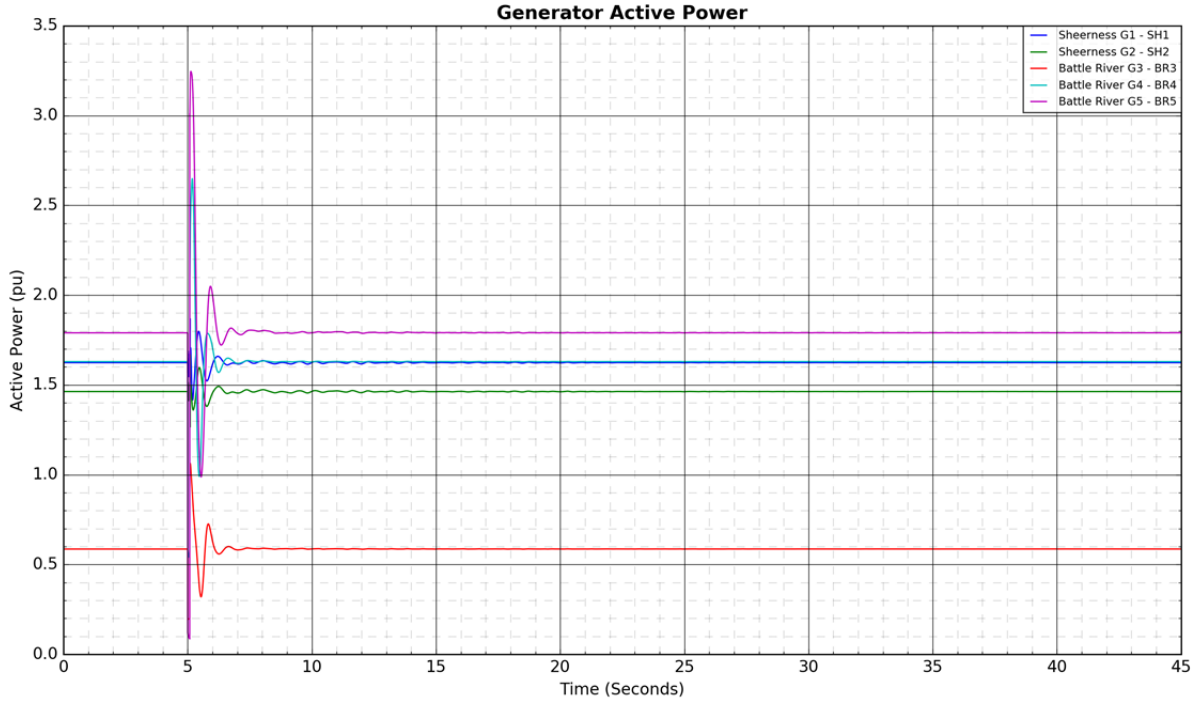
Generator Active Power
Active Power (pu)
Time (Seconds)
Sheerness G1 - SH1
Sheerness G2 - SH2
Battle River G3 - BR3
Battle River G4 - BR4
Battle River G5 - BR5
0.0
0.5
1.0
1.5
2.0
2.5
3.0
3.5
0
5
10
15
20
25
30
35
40
45

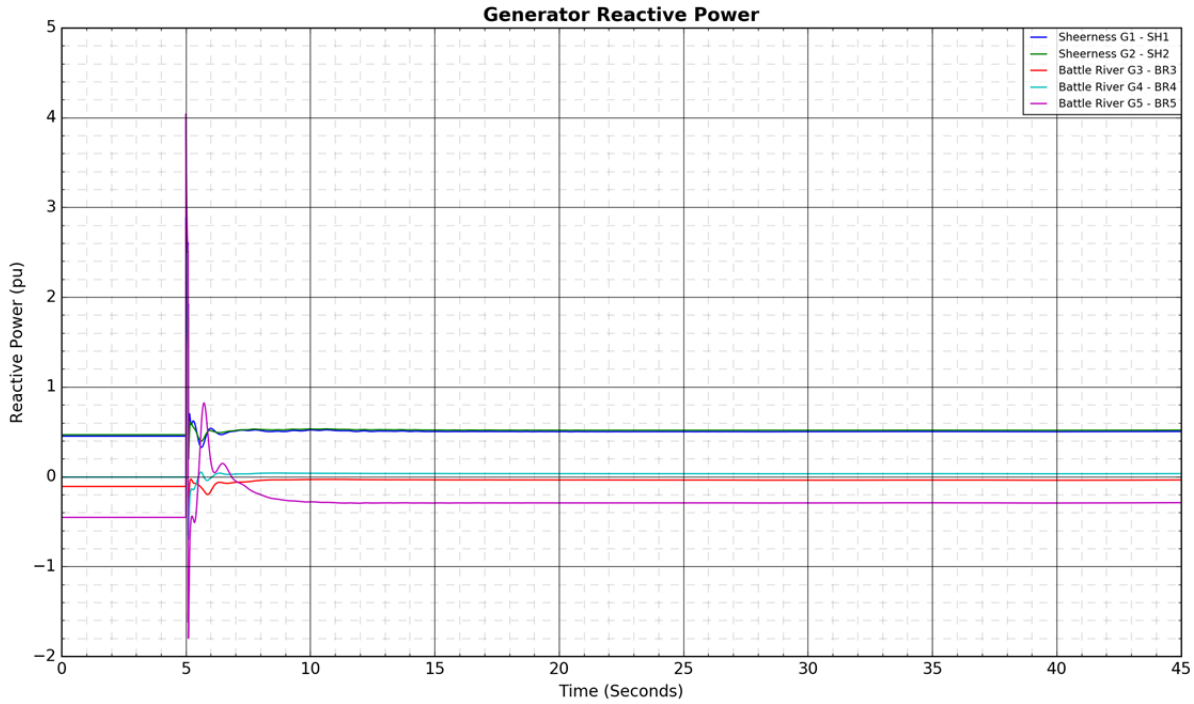
Generator Reactive Power
Sheerness G1 - SH1
Sheerness G2 - SH2
Battle River G3 - BR3
Battle River G4 - BR4
Battle River G5 - BR5
Reactive Power (pu)
Time (Seconds)

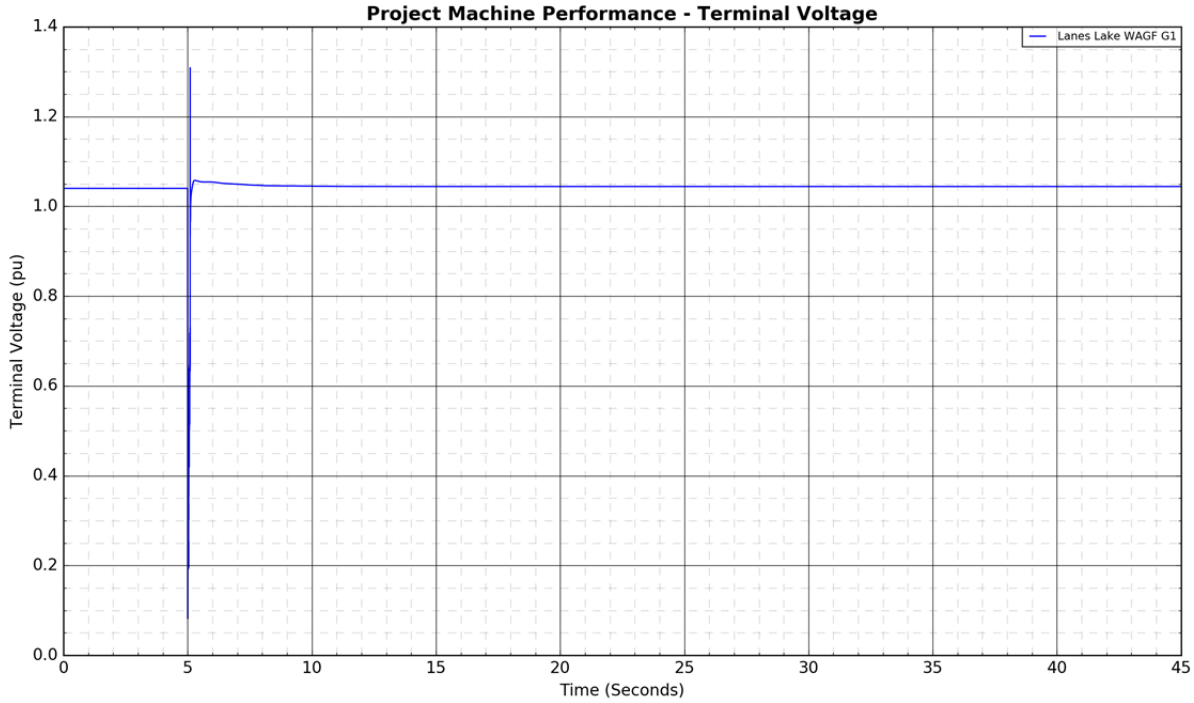
Project Machine Performance - Terminal Voltage
Lanes Lake WAGF G1
Terminal Voltage (pu)
Time (Seconds)


Project Machine Performance - Active Power
Lanes Lake WAGF G1
Active Power (pu)
Time (Seconds)
2.5
2.0
1.5
1.0
0.5
0.0
0
5
10
15
20
25
30
35
40
45

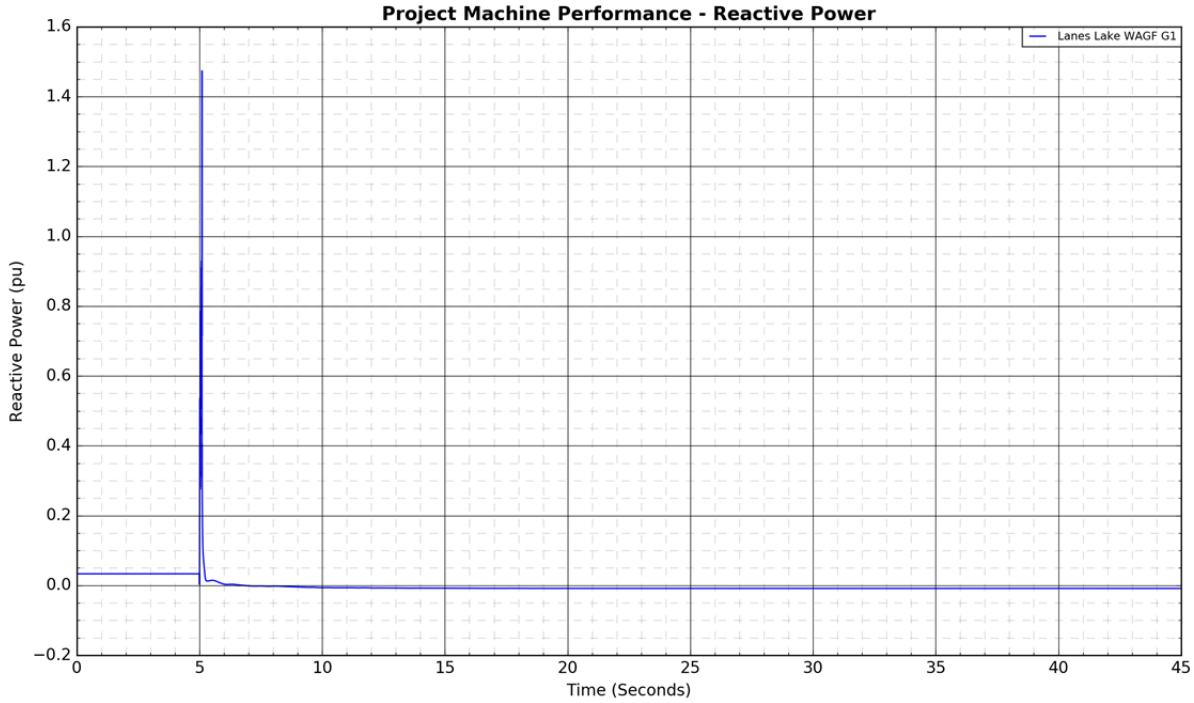
Project Machine Performance - Reactive Power
Lanes Lake WAGF G1
Reactive Power (pu)
Time (Seconds)
1.6
1.4
1.2
1.0
0.8
0.6
0.4
0.2
0.0
−0.2
0
5
10
15
20
25
30
35
40
45


Branch Active Power Flows
9L93 (Pioneer 805S - Halkirk 615S)
9L175 (Pioneer 805S - Tincherbray 972S)
9L59 (Anderson 801S - Tinchebray 972S)
Active Power (MW)
Time (Seconds)

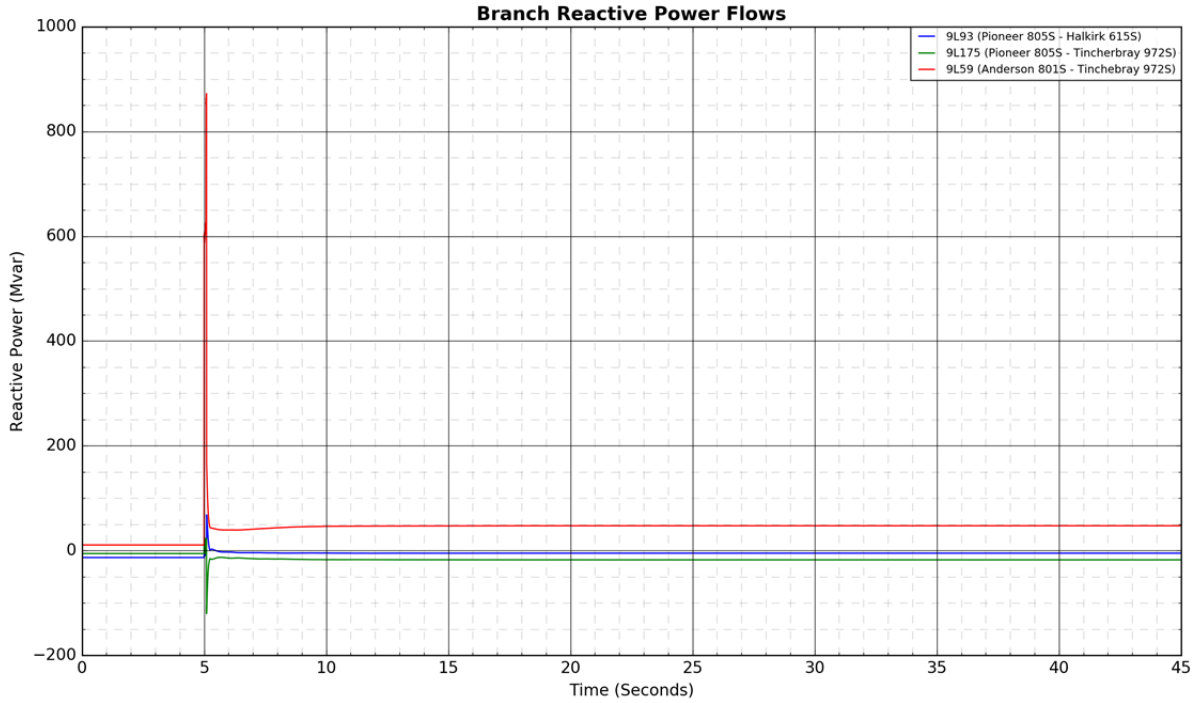
Branch Reactive Power Flows
9L93 (Pioneer 805S - Halkirk 615S)
9L175 (Pioneer 805S - Tincherbray 972S)
9L59 (Anderson 801S - Tinchebray 972S)
Reactive Power (Mvar)
Time (Seconds)

Figure A4-22: 9L16 (Tinchebray 972S - Cordel 755S): 3-phase fault at Tinchebray 972S

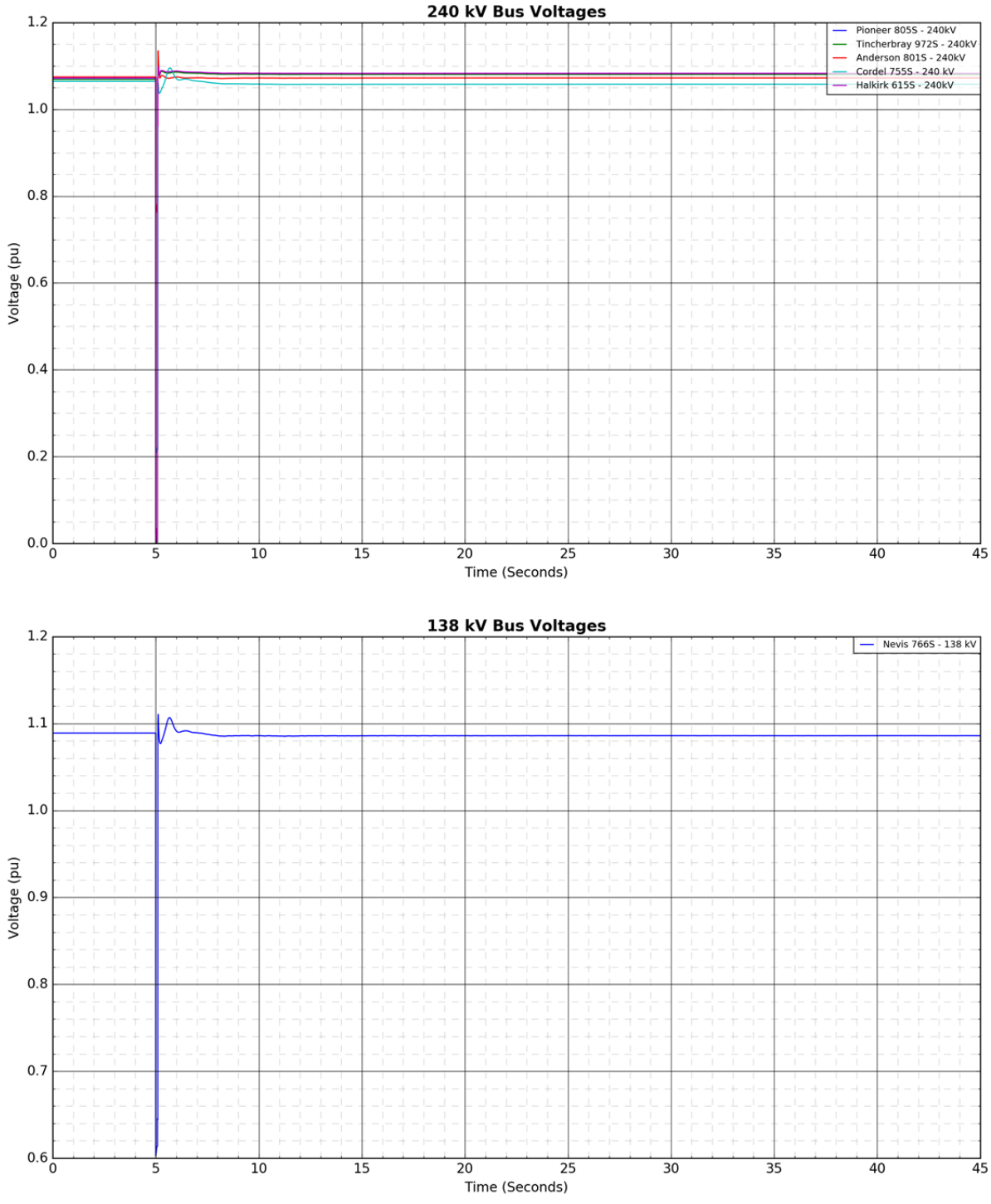

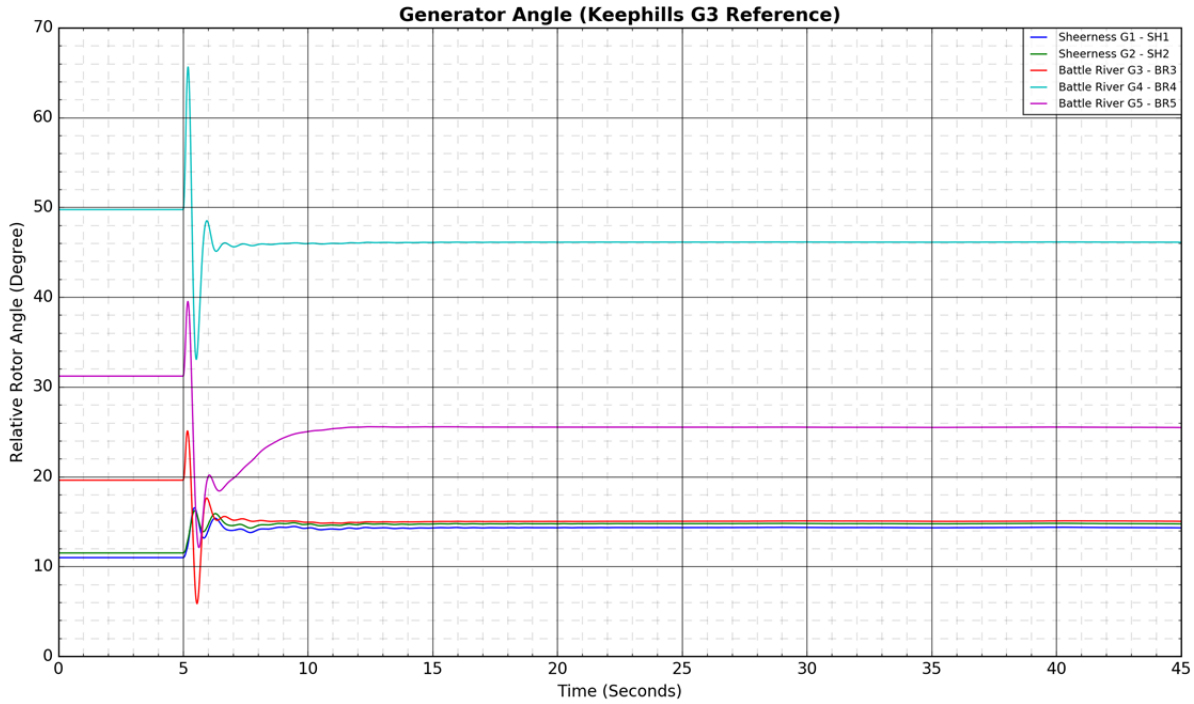
Generator Angle (Keephills G3 Reference)
Relative Rotor Angle (Degree)
Time (Seconds)
Sheerness G1 - SH1
Sheerness G2 - SH2
Battle River G3 - BR3
Battle River G4 - BR4
Battle River G5 - BR5

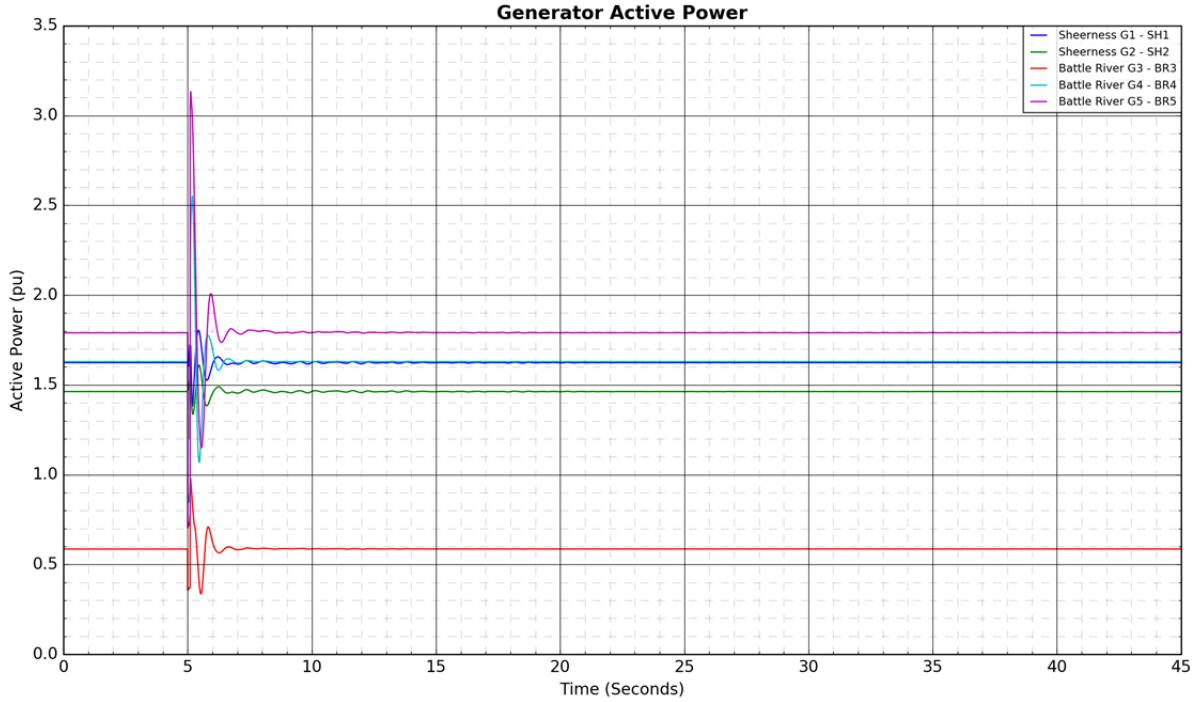
Generator Active Power
Active Power (pu)
Time (Seconds)
Sheerness G1 - SH1
Sheerness G2 - SH2
Battle River G3 - BR3
Battle River G4 - BR4
Battle River G5 - BR5

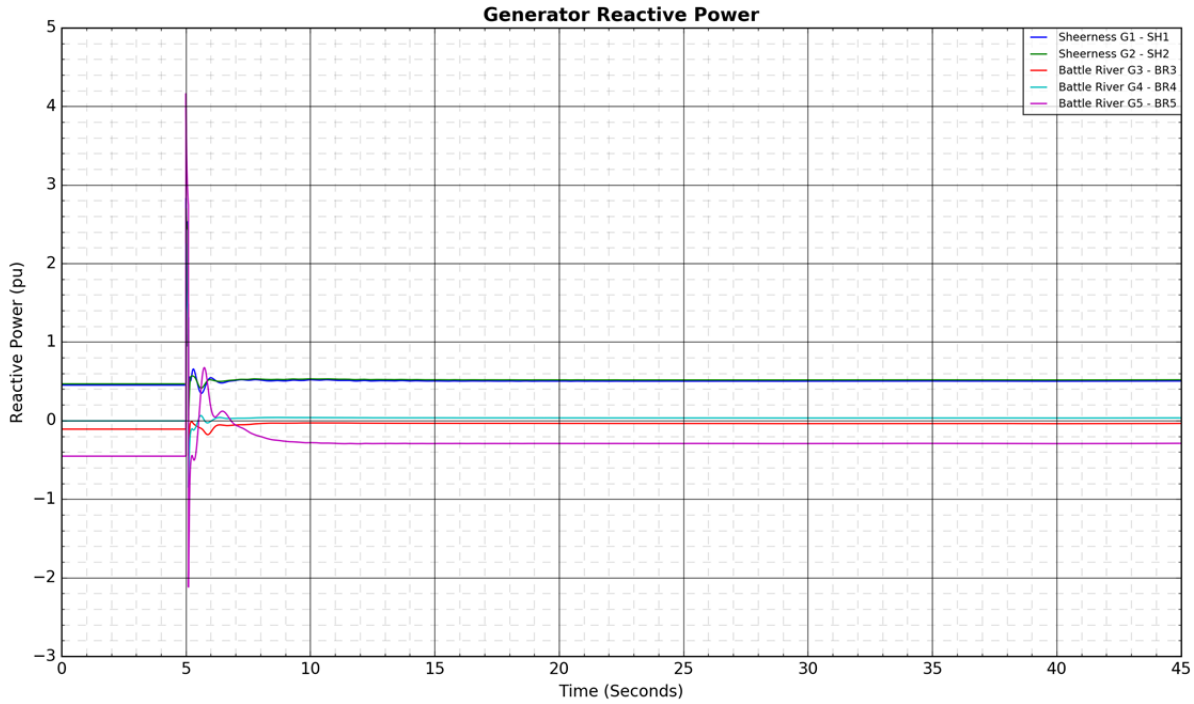
Generator Reactive Power
Sheerness G1 - SH1
Sheerness G2 - SH2
Battle River G3 - BR3
Battle River G4 - BR4
Battle River G5 - BR5
Reactive Power (pu)
Time (Seconds)

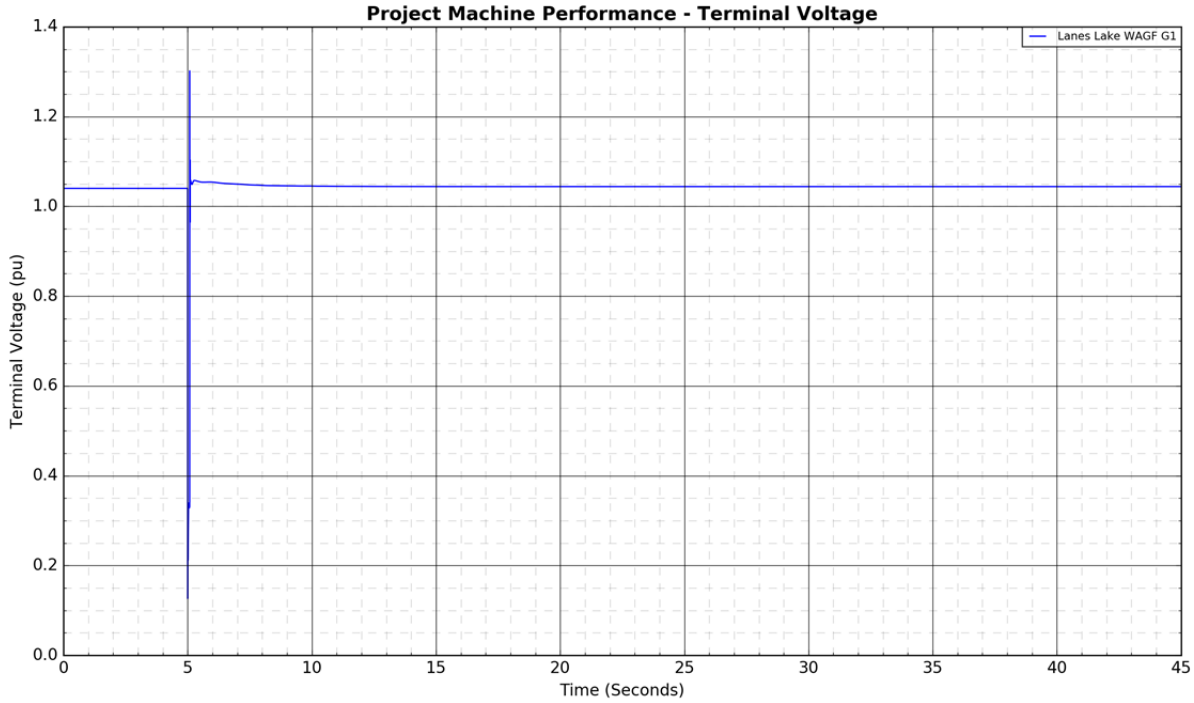
Project Machine Performance - Terminal Voltage
Lanes Lake WAGF G1
Terminal Voltage (pu)
Time (Seconds)


Project Machine Performance - Active Power
Lanes Lake WAGF G1
Active Power (pu)
Time (Seconds)
2.0
1.5
1.0
0.5
0.0
0
5
10
15
20
25
30
35
40
45

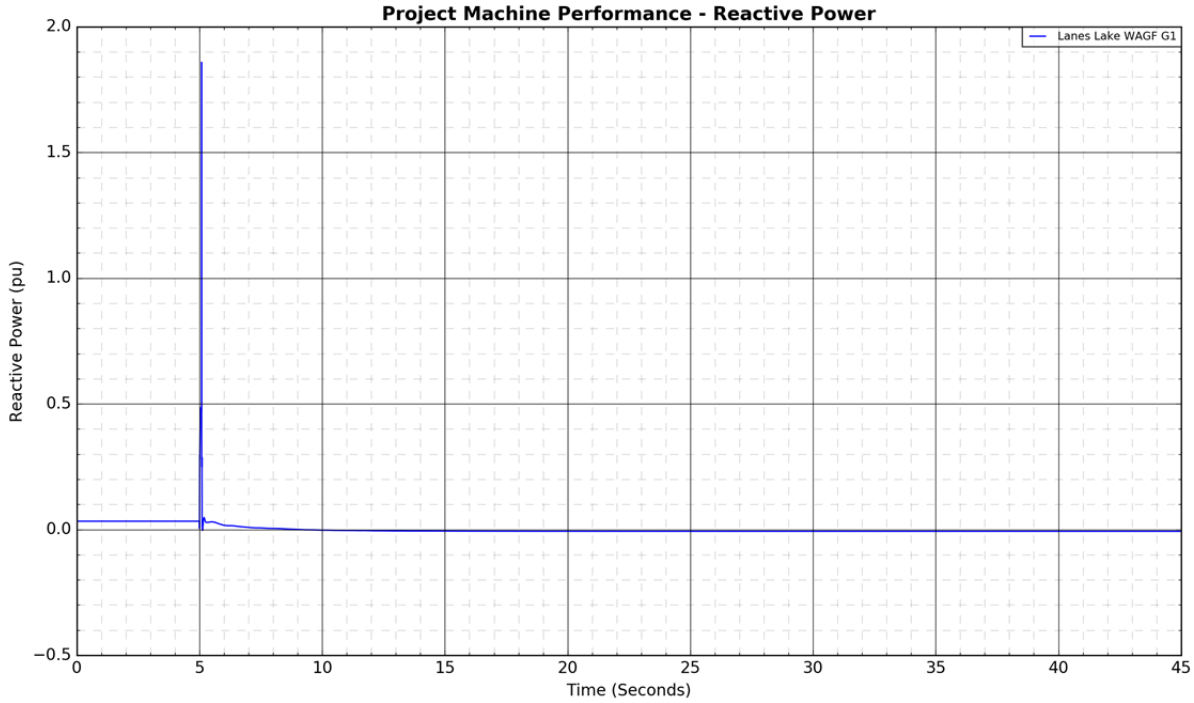
Project Machine Performance - Reactive Power
Lanes Lake WAGF G1
Reactive Power (pu)
Time (Seconds)
2.0
1.5
1.0
0.5
0.0
−0.5
0
5
10
15
20
25
30
35
40
45


Branch Active Power Flows
9L93 (Pioneer 805S - Halkirk 615S)
9L175 (Pioneer 805S - Tincherbray 972S)
9L59 (Anderson 801S - Tinchebray 972S)
Active Power (MW)
Time (Seconds)

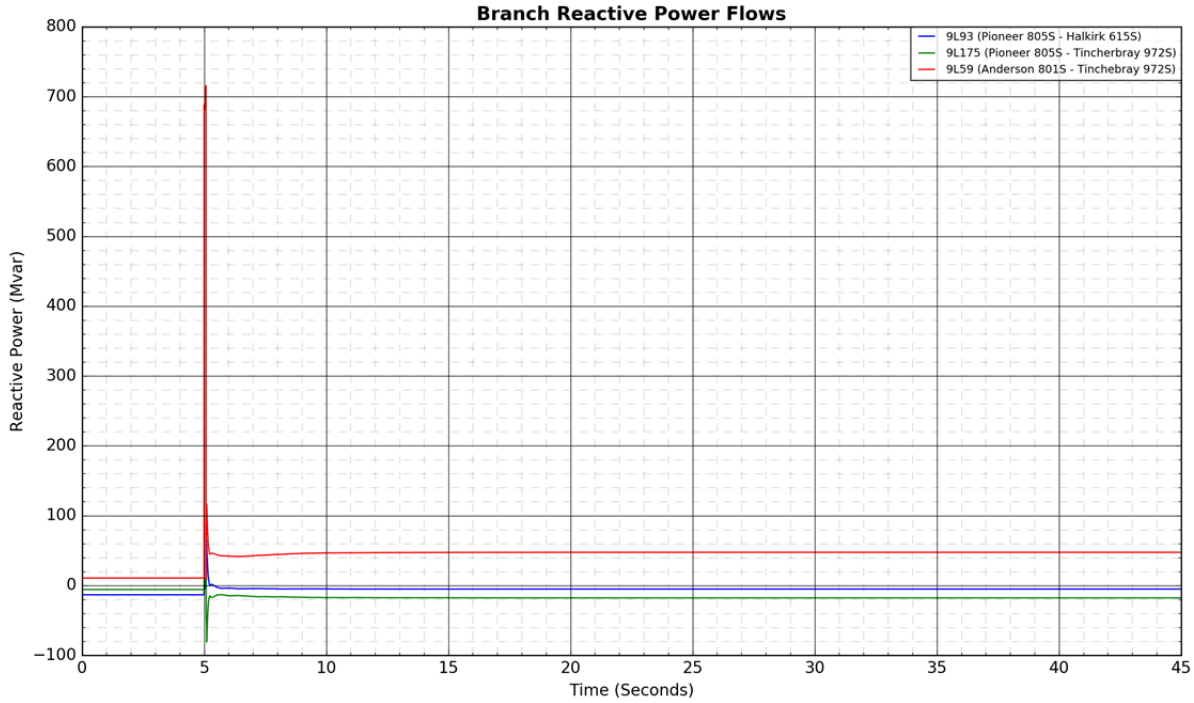
Branch Reactive Power Flows
9L93 (Pioneer 805S - Halkirk 615S)
9L175 (Pioneer 805S - Tincherbray 972S)
9L59 (Anderson 801S - Tinchebray 972S)
Reactive Power (Mvar)
Time (Seconds)

Figure A4-23: 9L59 (Anderson 801S - Tinchebray 972S): 3-phase fault at Anderson 801S

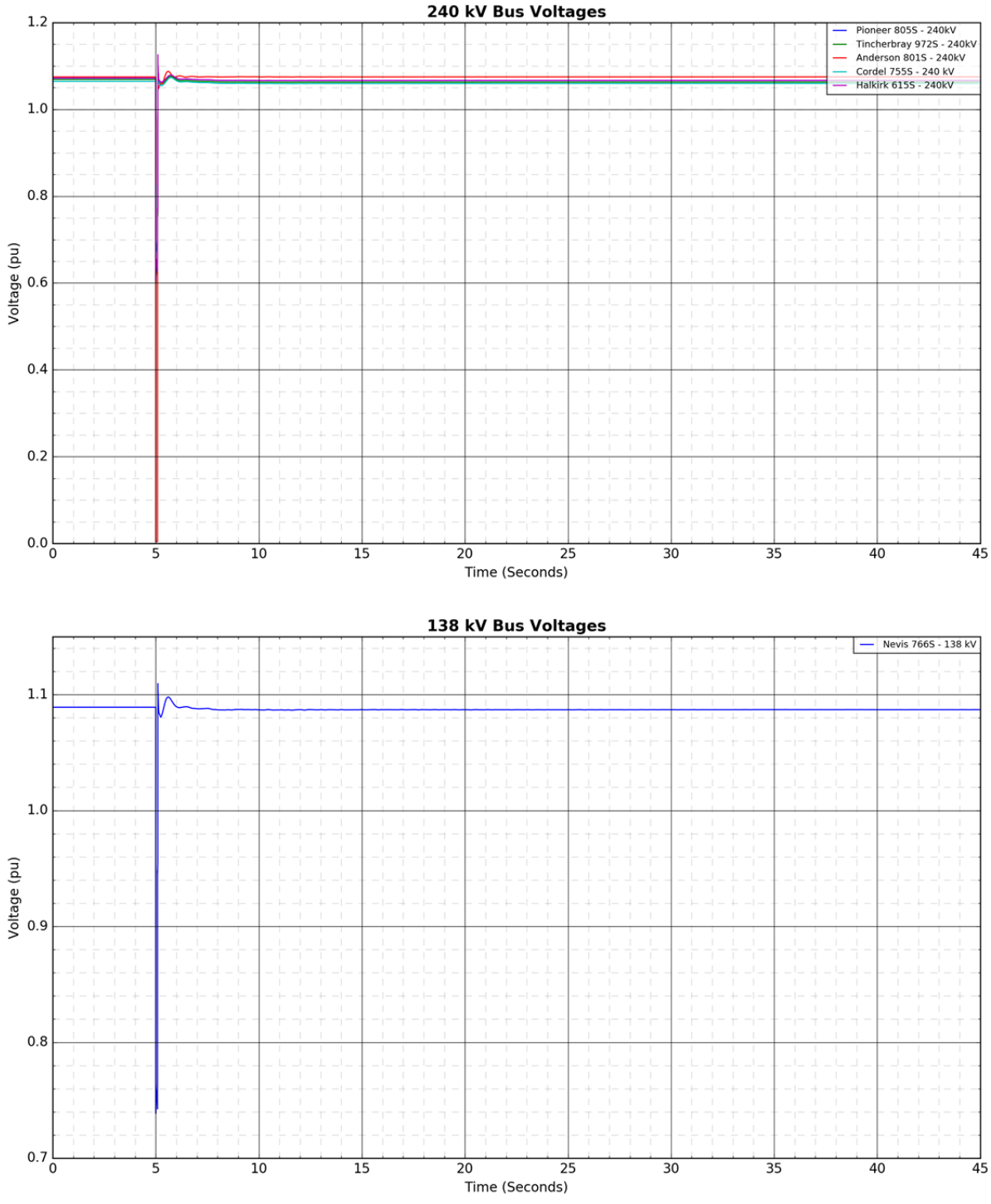

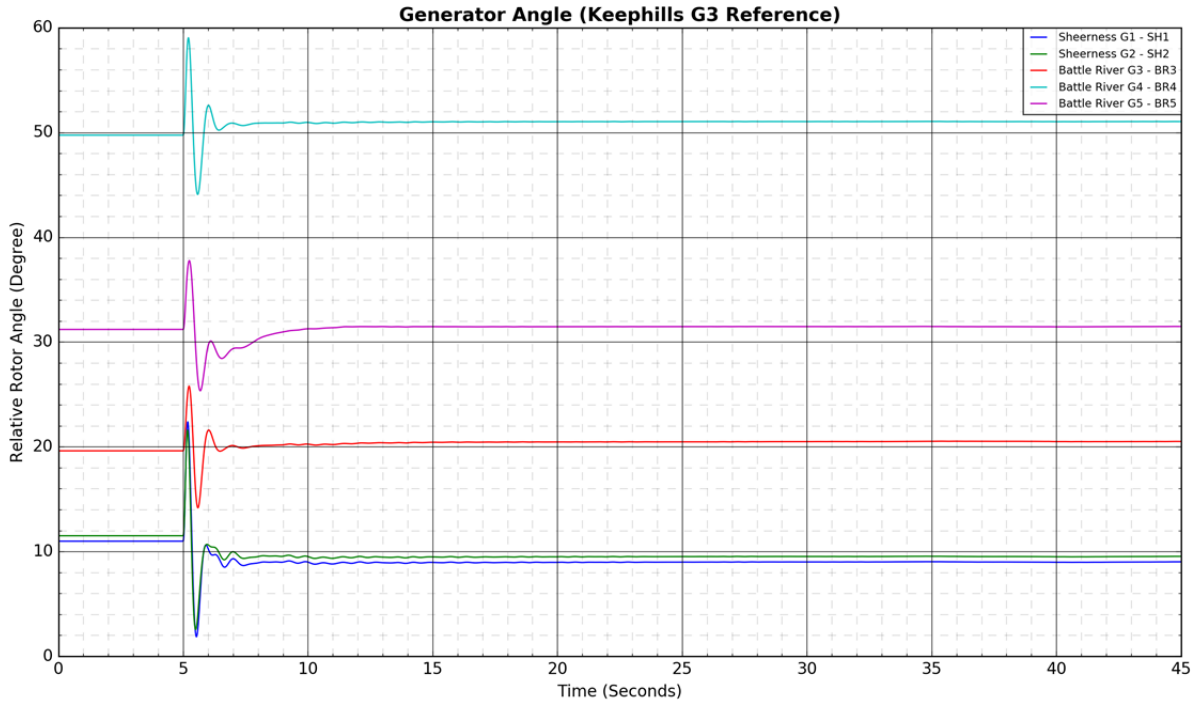
Generator Angle (Keephills G3 Reference)
Relative Rotor Angle (Degree)
Time (Seconds)
Sheerness G1 - SH1
Sheerness G2 - SH2
Battle River G3 - BR3
Battle River G4 - BR4
Battle River G5 - BR5
0
10
20
30
40
50
60
0
5
10
15
20
25
30
35
40
45

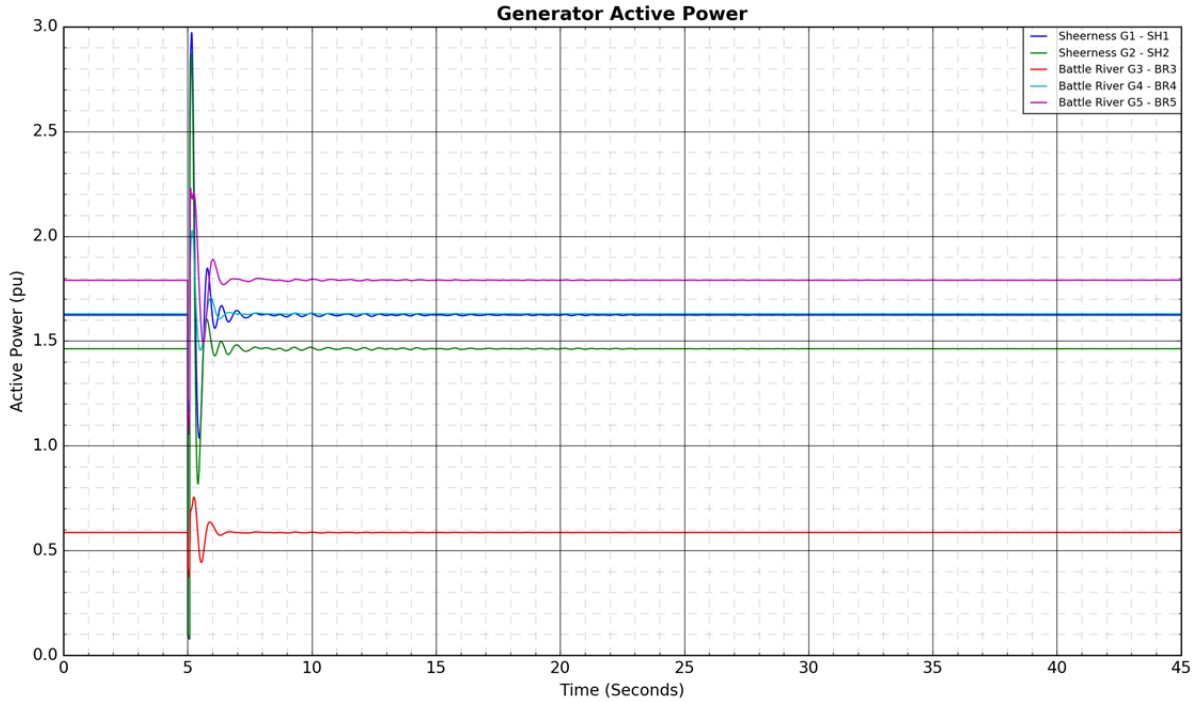
Generator Active Power
Active Power (pu)
Time (Seconds)
Sheerness G1 - SH1
Sheerness G2 - SH2
Battle River G3 - BR3
Battle River G4 - BR4
Battle River G5 - BR5
0.0
0.5
1.0
1.5
2.0
2.5
3.0
0
5
10
15
20
25
30
35
40
45

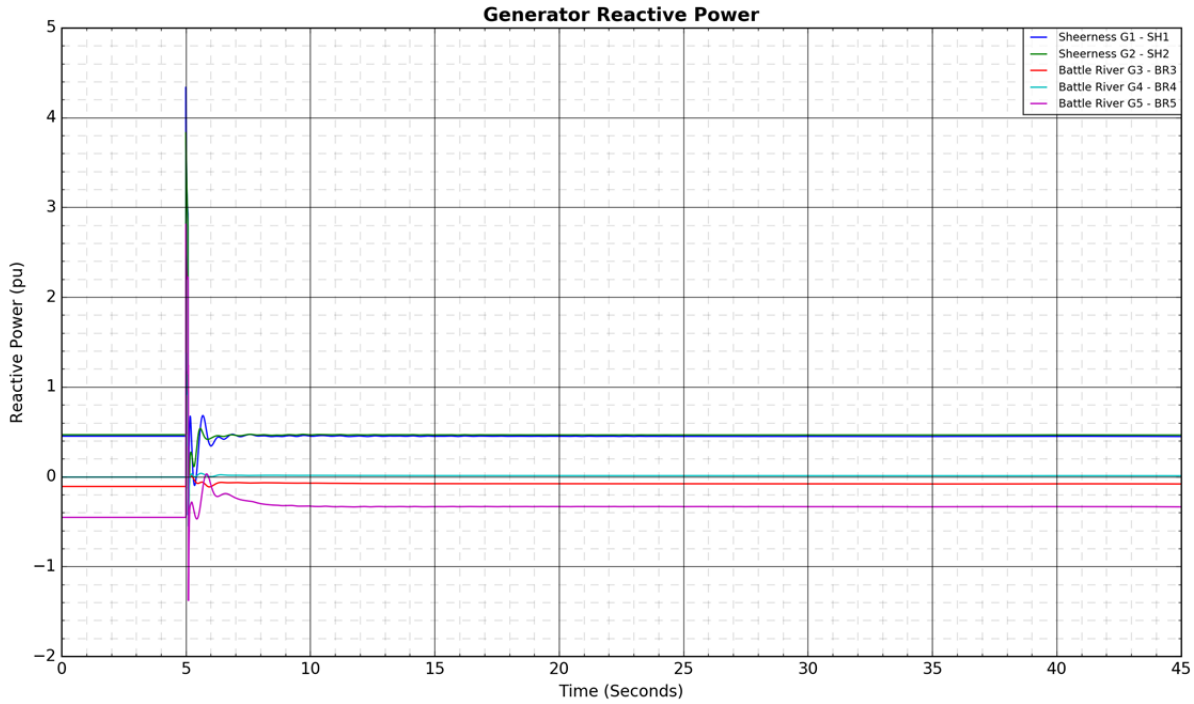
Generator Reactive Power
Sheerness G1 - SH1
Sheerness G2 - SH2
Battle River G3 - BR3
Battle River G4 - BR4
Battle River G5 - BR5
Reactive Power (pu)
Time (Seconds)

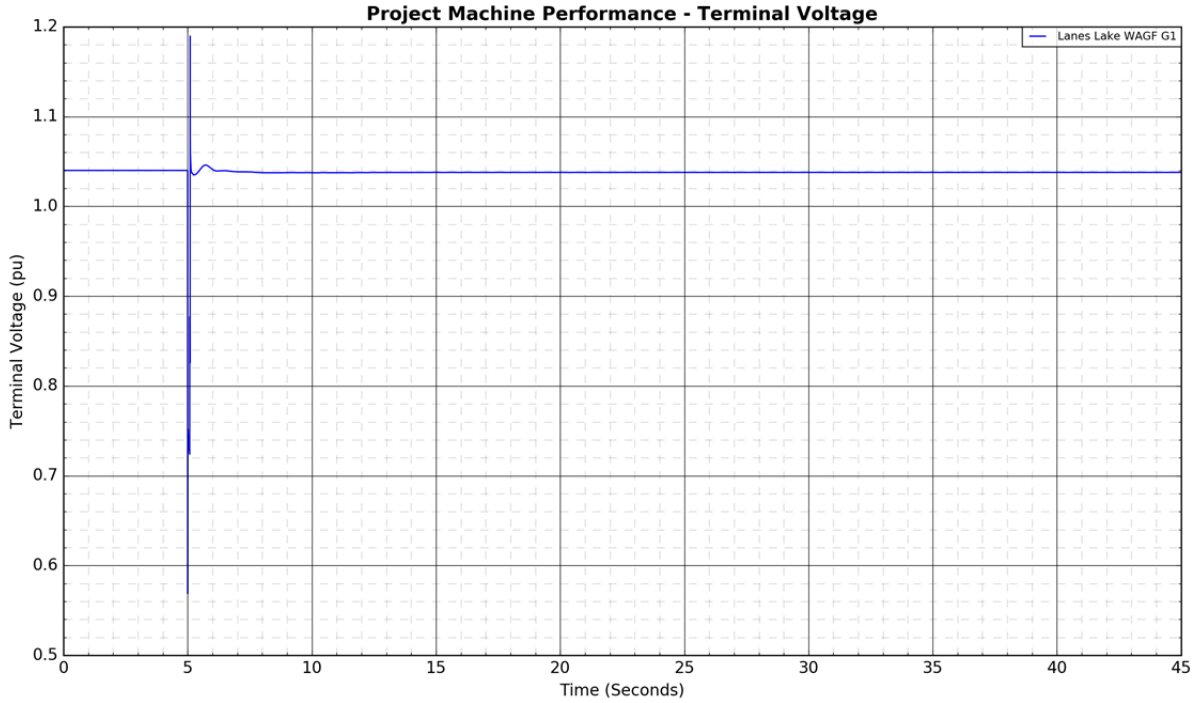
Project Machine Performance - Terminal Voltage
Lanes Lake WAGF G1
Terminal Voltage (pu)
Time (Seconds)


Project Machine Performance - Active Power
Lanes Lake WAGF G1
Active Power (pu)
Time (Seconds)
2.2
2.0
1.8
1.6
1.4
1.2
1.0
0.8
0
5
10
15
20
25
30
35
40
45

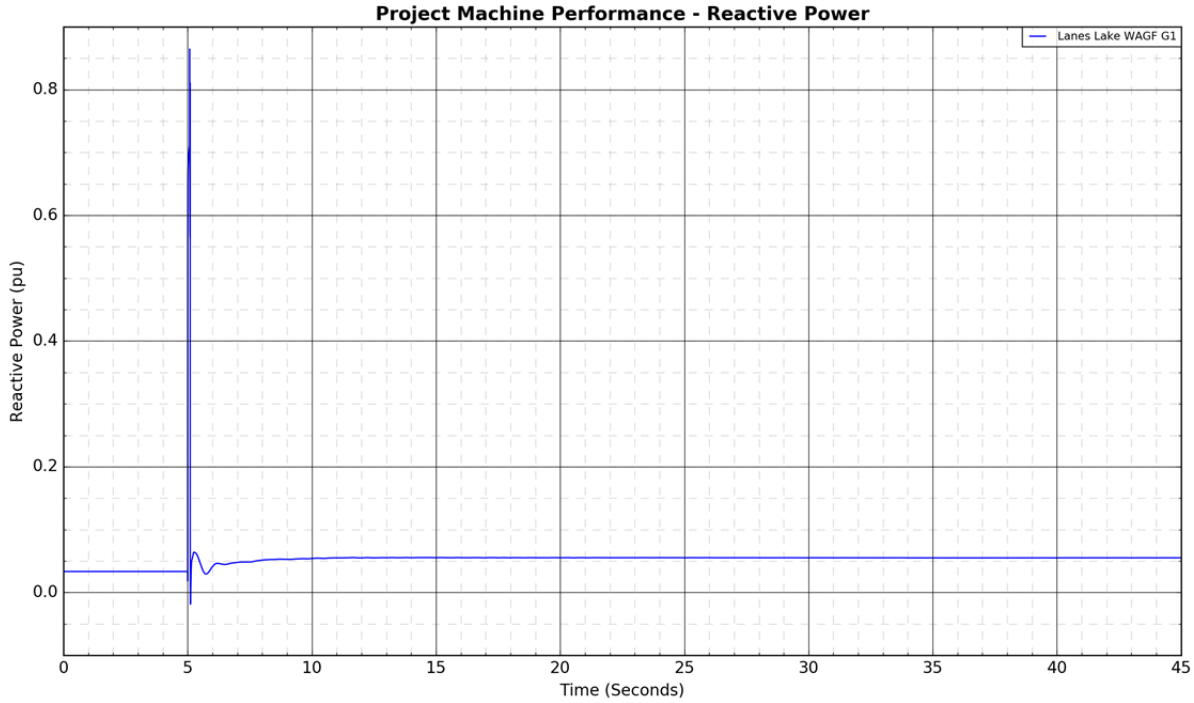
Project Machine Performance - Reactive Power
Lanes Lake WAGF G1
Reactive Power (pu)
Time (Seconds)
0.8
0.6
0.4
0.2
0.0
0
5
10
15
20
25
30
35
40
45


Branch Active Power Flows
9L93 (Pioneer 805S - Halkirk 615S)
9L175 (Pioneer 805S - Tincherbray 972S)
9L16 (Tincherbray 972S - Cordel 755S)
Active Power (MW)
Time (Seconds)

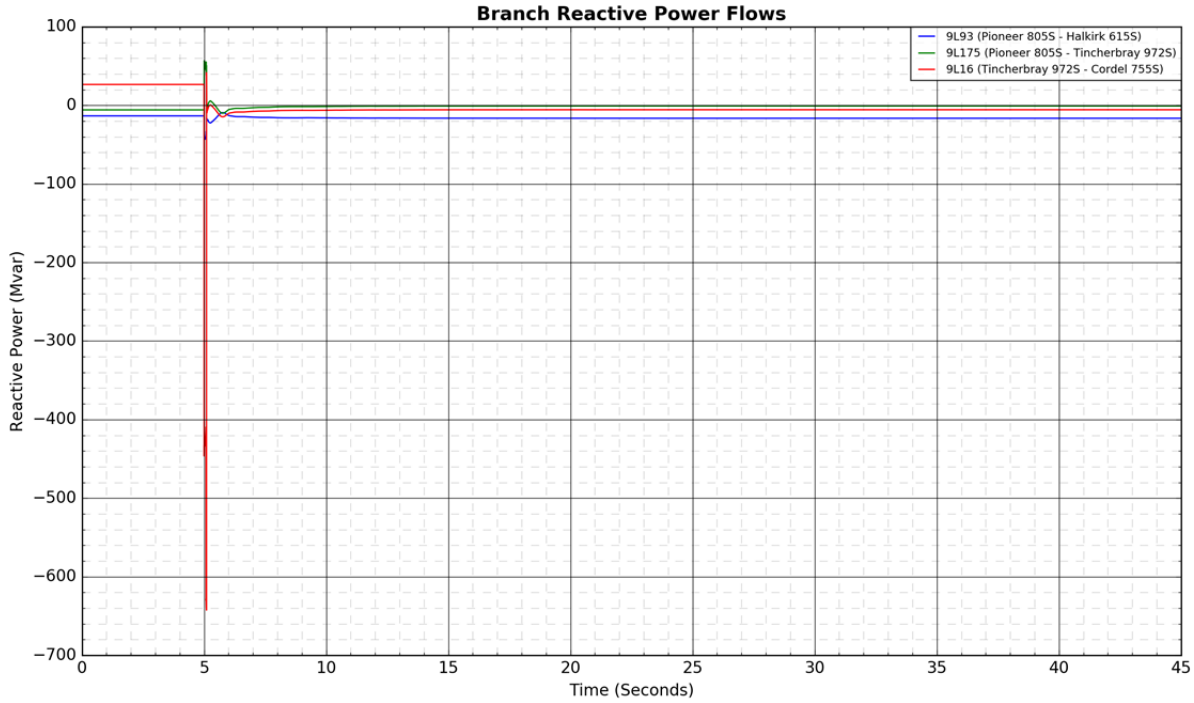
Branch Reactive Power Flows
9L93 (Pioneer 805S - Halkirk 615S)
9L175 (Pioneer 805S - Tincherbray 972S)
9L16 (Tincherbray 972S - Cordel 755S)
Reactive Power (Mvar)
Time (Seconds)

Figure A4-24: 9L59 (Anderson 801S - Tinchebray 972S): 3-phase fault at Tinchebray 972S

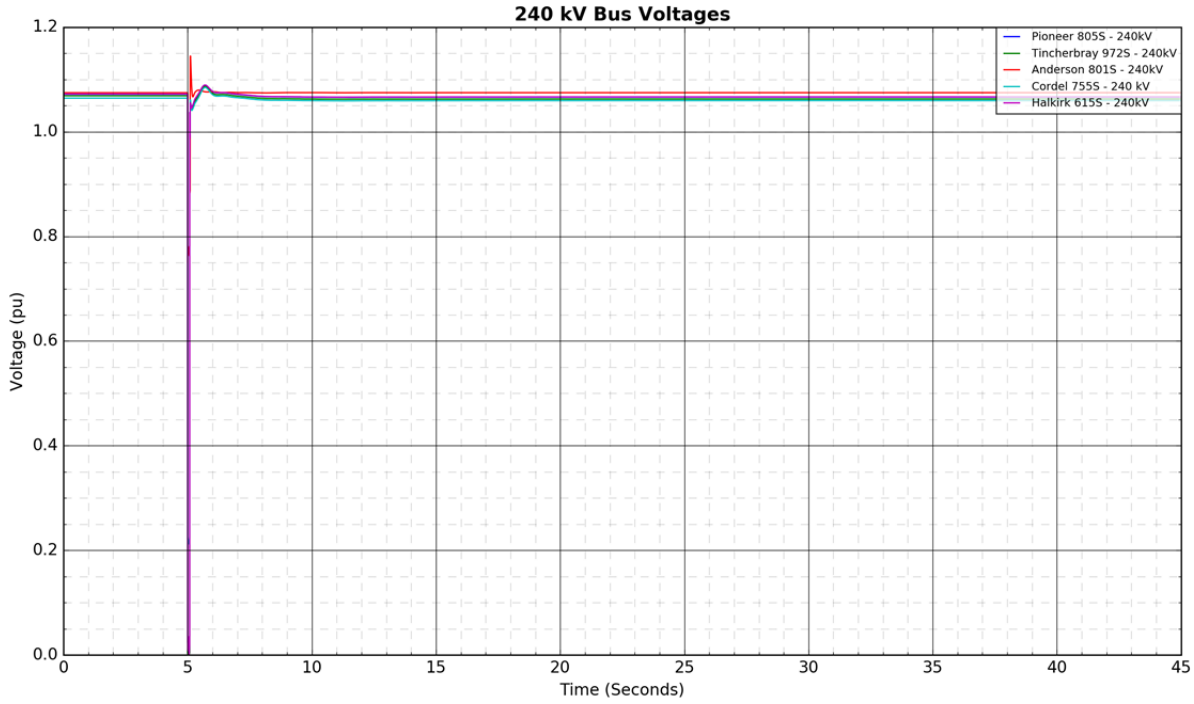

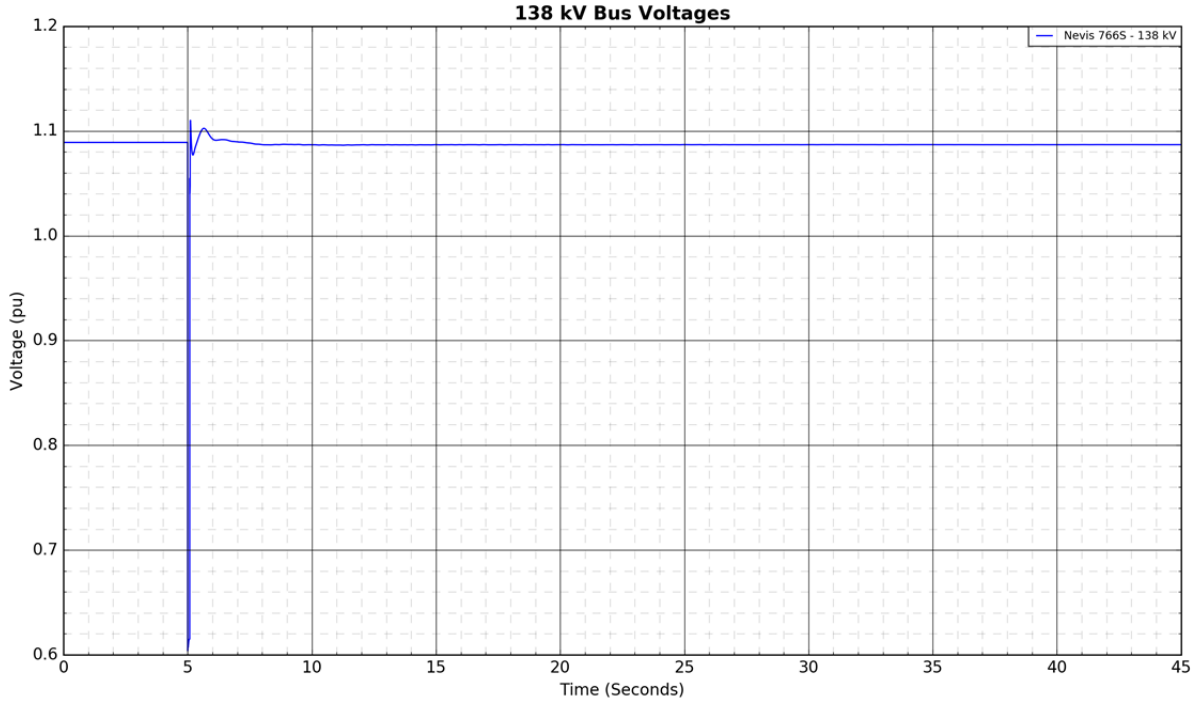

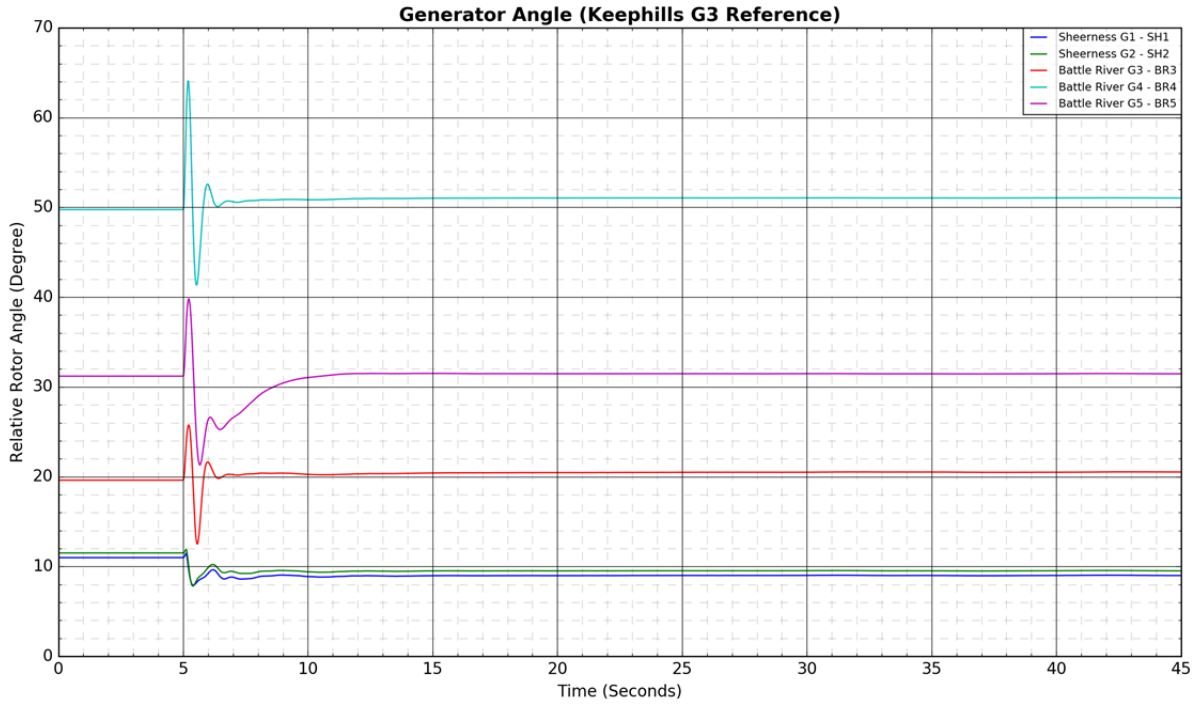
Generator Angle (Keephills G3 Reference)
Relative Rotor Angle (Degree)
Time (Seconds)
Sheerness G1 - SH1
Sheerness G2 - SH2
Battle River G3 - BR3
Battle River G4 - BR4
Battle River G5 - BR5
0
10
20
30
40
50
60
70
0
5
10
15
20
25
30
35
40
45

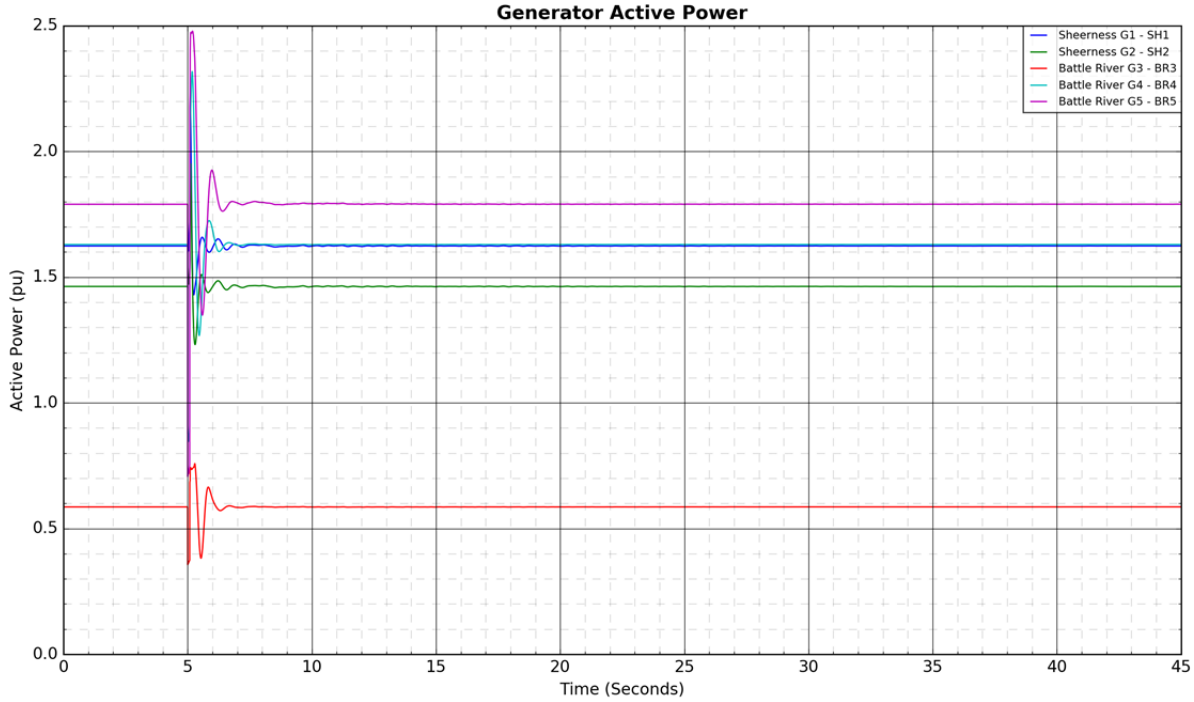
Generator Active Power
Active Power (pu)
Time (Seconds)
Sheerness G1 - SH1
Sheerness G2 - SH2
Battle River G3 - BR3
Battle River G4 - BR4
Battle River G5 - BR5
0.0
0.5
1.0
1.5
2.0
2.5
0
5
10
15
20
25
30
35
40
45

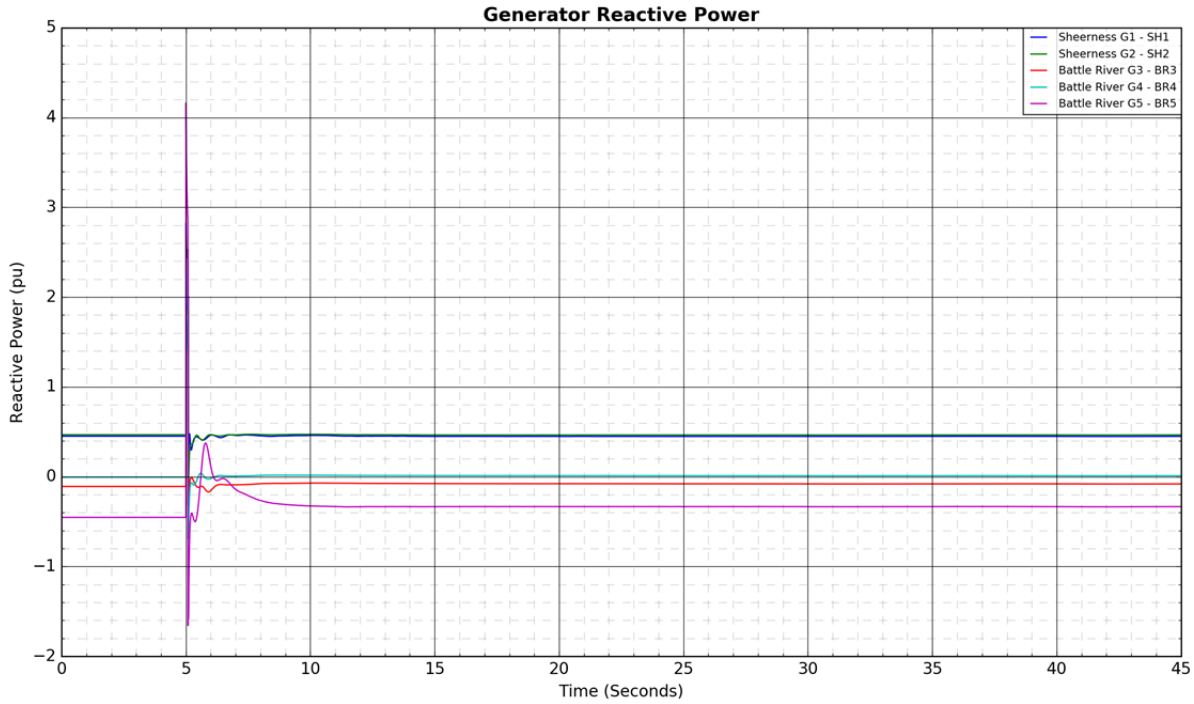
Generator Reactive Power
Sheerness G1 - SH1
Sheerness G2 - SH2
Battle River G3 - BR3
Battle River G4 - BR4
Battle River G5 - BR5
Reactive Power (pu)
Time (Seconds)

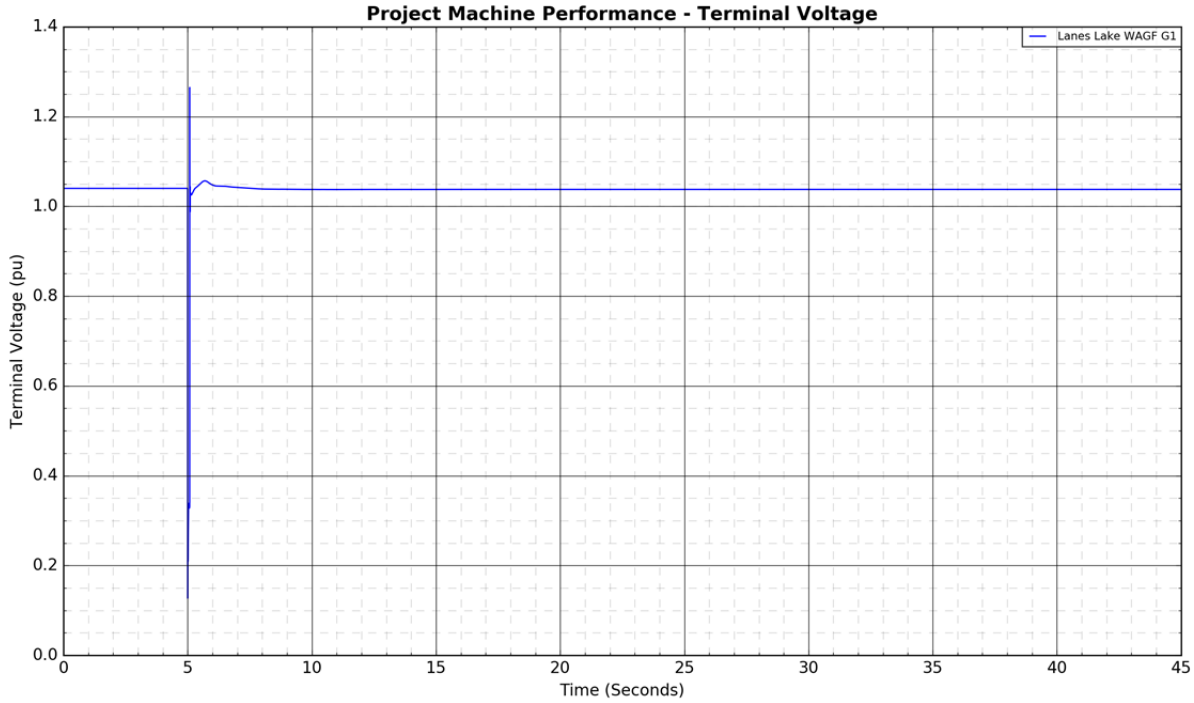
Project Machine Performance - Terminal Voltage
Lanes Lake WAGF G1
Terminal Voltage (pu)
Time (Seconds)


Project Machine Performance - Active Power
Lanes Lake WAGF G1
Active Power (pu)
Time (Seconds)
2.0
1.5
1.0
0.5
0.0
0
5
10
15
20
25
30
35
40
45

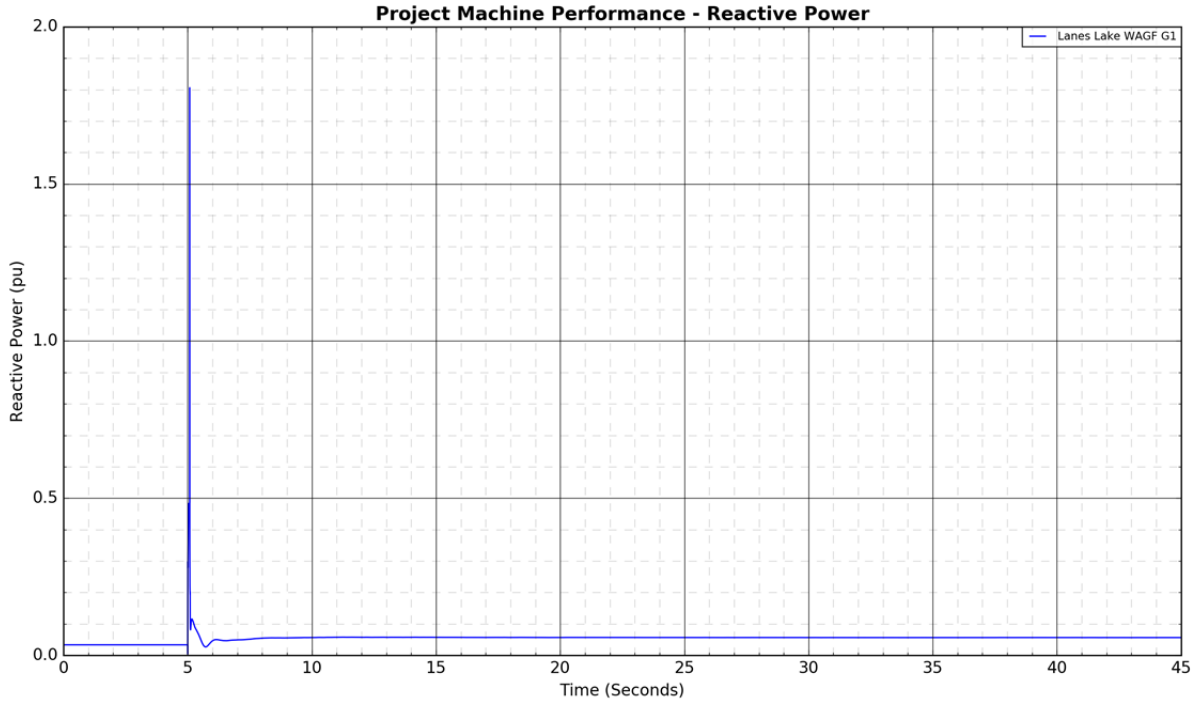
Project Machine Performance - Reactive Power
Lanes Lake WAGF G1
Reactive Power (pu)
Time (Seconds)
2.0
1.5
1.0
0.5
0.0
0
5
10
15
20
25
30
35
40
45

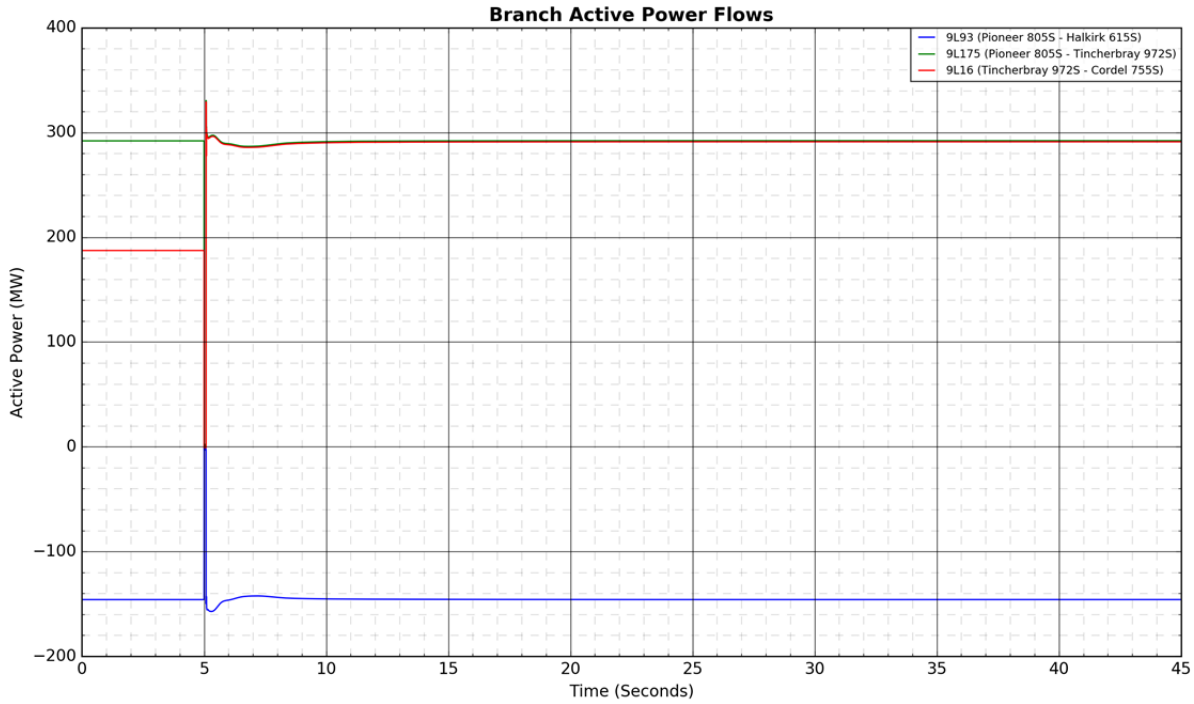
Branch Active Power Flows
9L93 (Pioneer 805S - Halkirk 615S)
9L175 (Pioneer 805S - Tincherbray 972S)
9L16 (Tincherbray 972S - Cordel 755S)
Active Power (MW)
Time (Seconds)

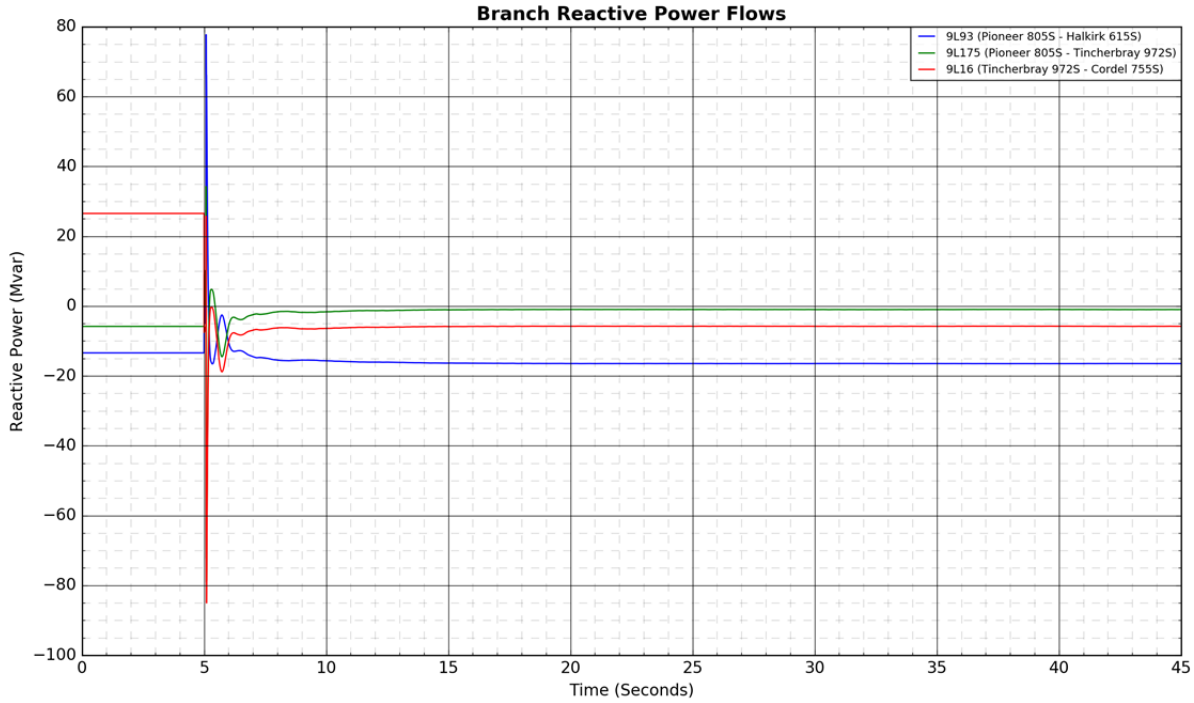
Branch Reactive Power Flows
9L93 (Pioneer 805S - Halkirk 615S)
9L175 (Pioneer 805S - Tincherbray 972S)
9L16 (Tincherbray 972S - Cordel 755S)
Reactive Power (Mvar)
Time (Seconds)

Figure A4-25: 9L966 (Pemukan 932S - Hansman Lake 650S): 3-phase fault at Pemukan 932S



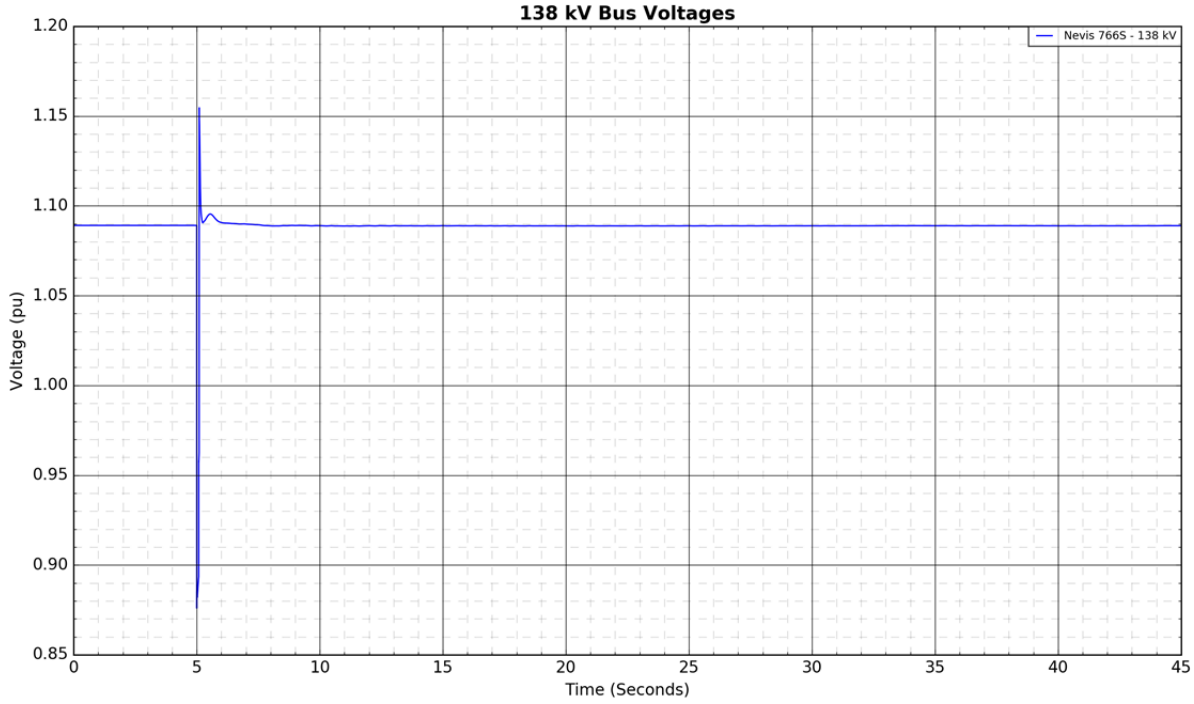

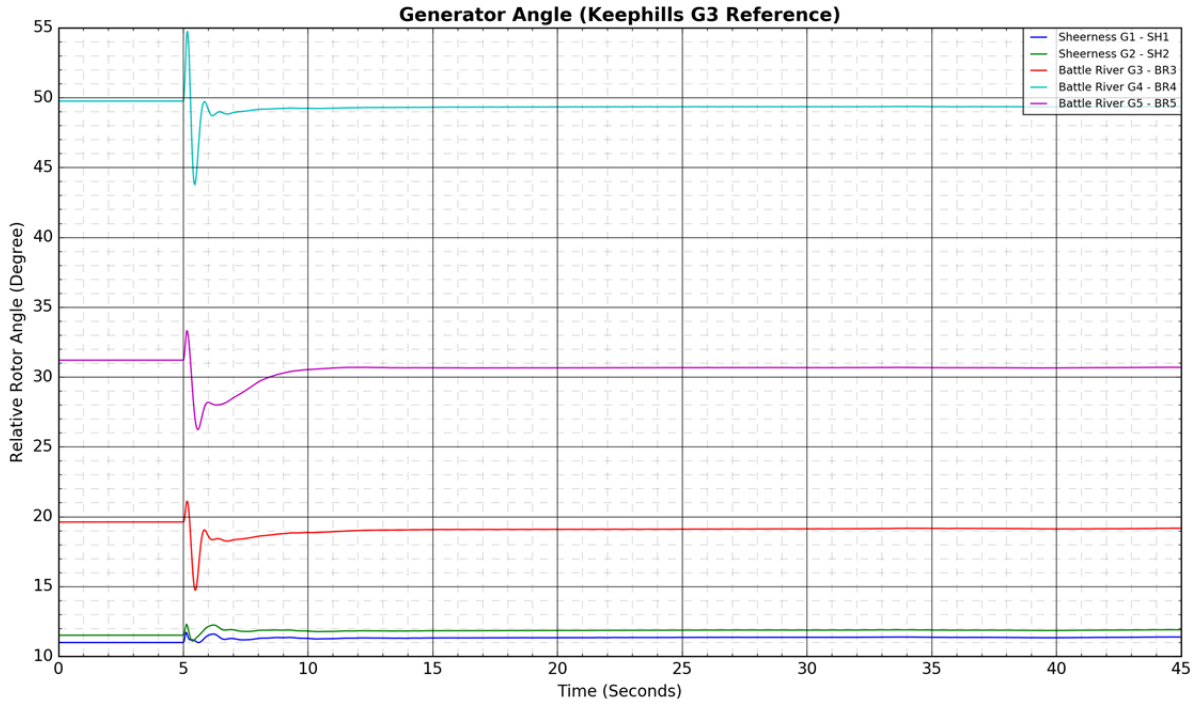
Generator Angle (Keephills G3 Reference)
Relative Rotor Angle (Degree)
Time (Seconds)
Sheerness G1 - SH1
Sheerness G2 - SH2
Battle River G3 - BR3
Battle River G4 - BR4
Battle River G5 - BR5

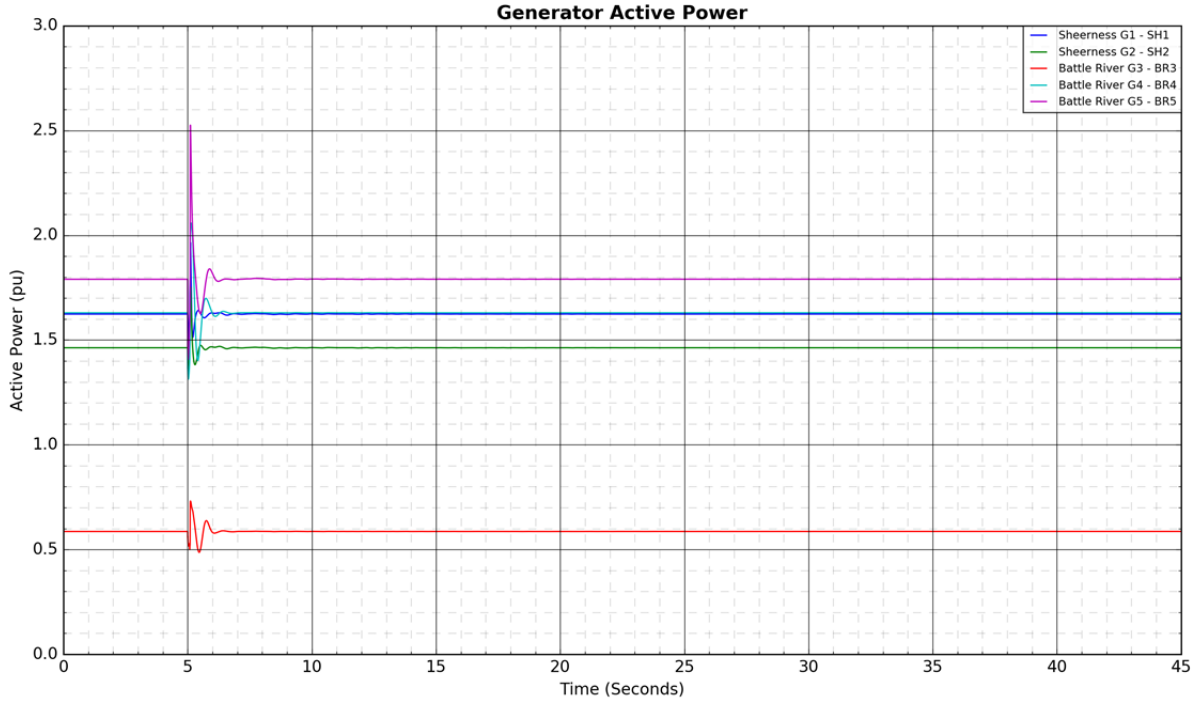
Generator Active Power
Active Power (pu)
Time (Seconds)
Sheerness G1 - SH1
Sheerness G2 - SH2
Battle River G3 - BR3
Battle River G4 - BR4
Battle River G5 - BR5

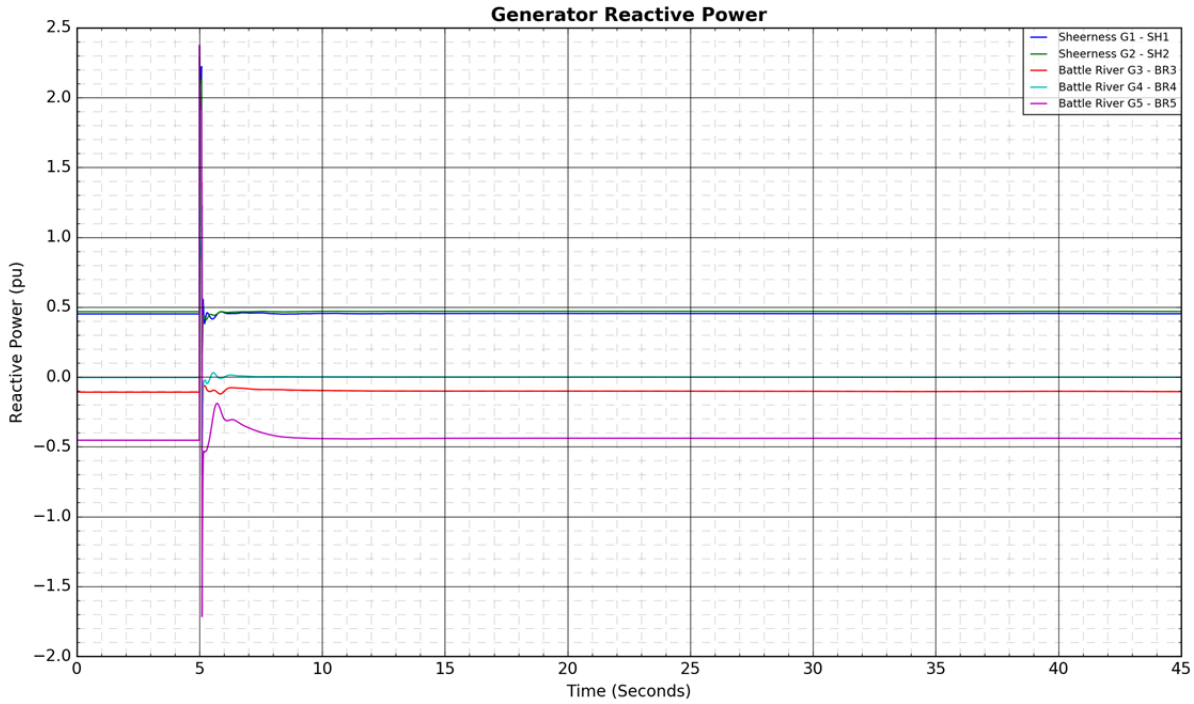
Generator Reactive Power
Sheerness G1 - SH1
Sheerness G2 - SH2
Battle River G3 - BR3
Battle River G4 - BR4
Battle River G5 - BR5
Reactive Power (pu)
Time (Seconds)

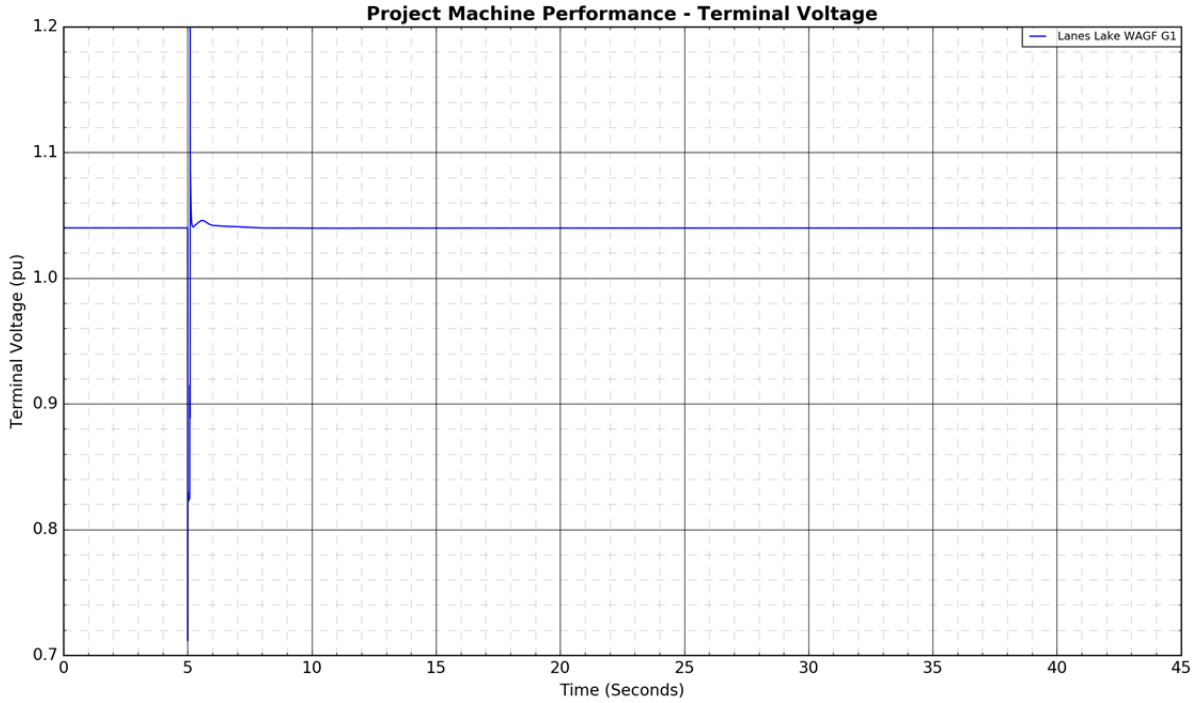
Project Machine Performance - Terminal Voltage
Lanes Lake WAGF G1
Terminal Voltage (pu)
Time (Seconds)


Project Machine Performance - Active Power
Lanes Lake WAGF G1
Active Power (pu)
Time (Seconds)
2.2
2.0
1.8
1.6
1.4
1.2
1.0
0
5
10
15
20
25
30
35
40
45

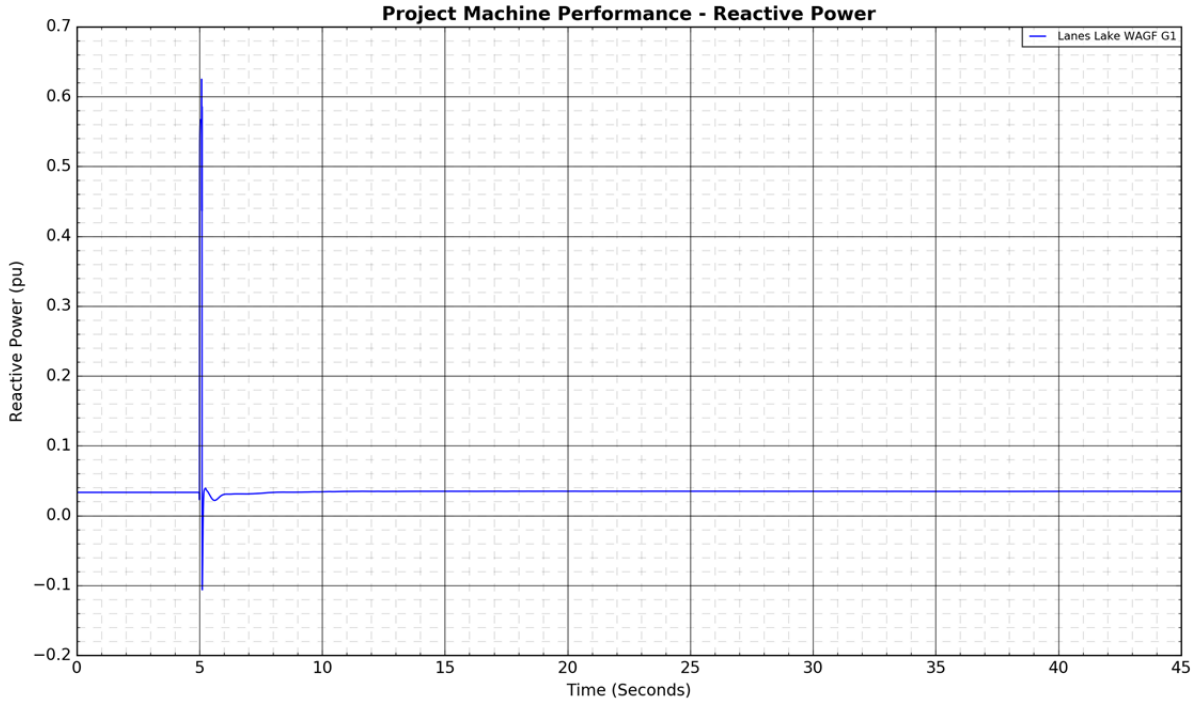
Project Machine Performance - Reactive Power
Lanes Lake WAGF G1
Reactive Power (pu)
Time (Seconds)
0.7
0.6
0.5
0.4
0.3
0.2
0.1
0.0
−0.1
−0.2
0
5
10
15
20
25
30
35
40
45


Branch Active Power Flows
9L93 (Pioneer 805S - Halkirk 615S)
9L175 (Pioneer 805S - Tincherbray 972S)
9L16 (Tincherbray 972S - Cordel 755S)
9L59 (Anderson 801S - Tinchebray 972S)
Active Power (MW)
Time (Seconds)

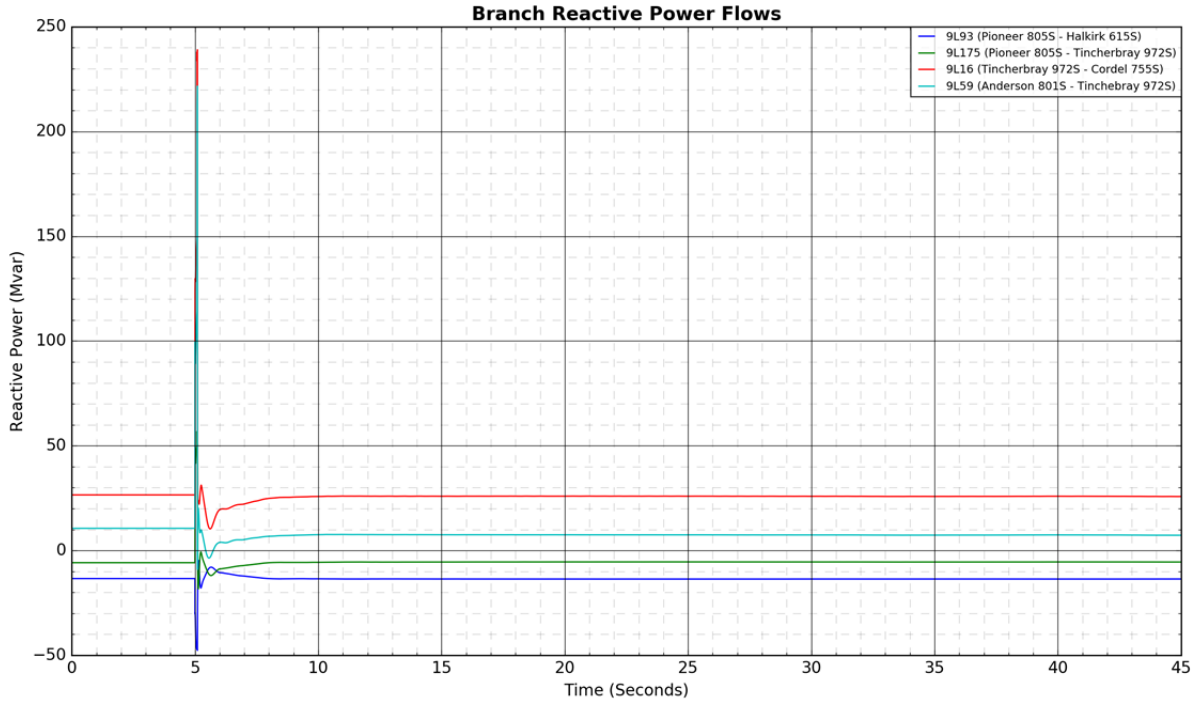
Branch Reactive Power Flows
9L93 (Pioneer 805S - Halkirk 615S)
9L175 (Pioneer 805S - Tincherbray 972S)
9L16 (Tincherbray 972S - Cordel 755S)
9L59 (Anderson 801S - Tinchebray 972S)
Reactive Power (Mvar)
Time (Seconds)

Figure A4-26: 9L966 (Pemukan 932S - Hansman Lake 650S): 3-phase fault at Hansman Lake 650S

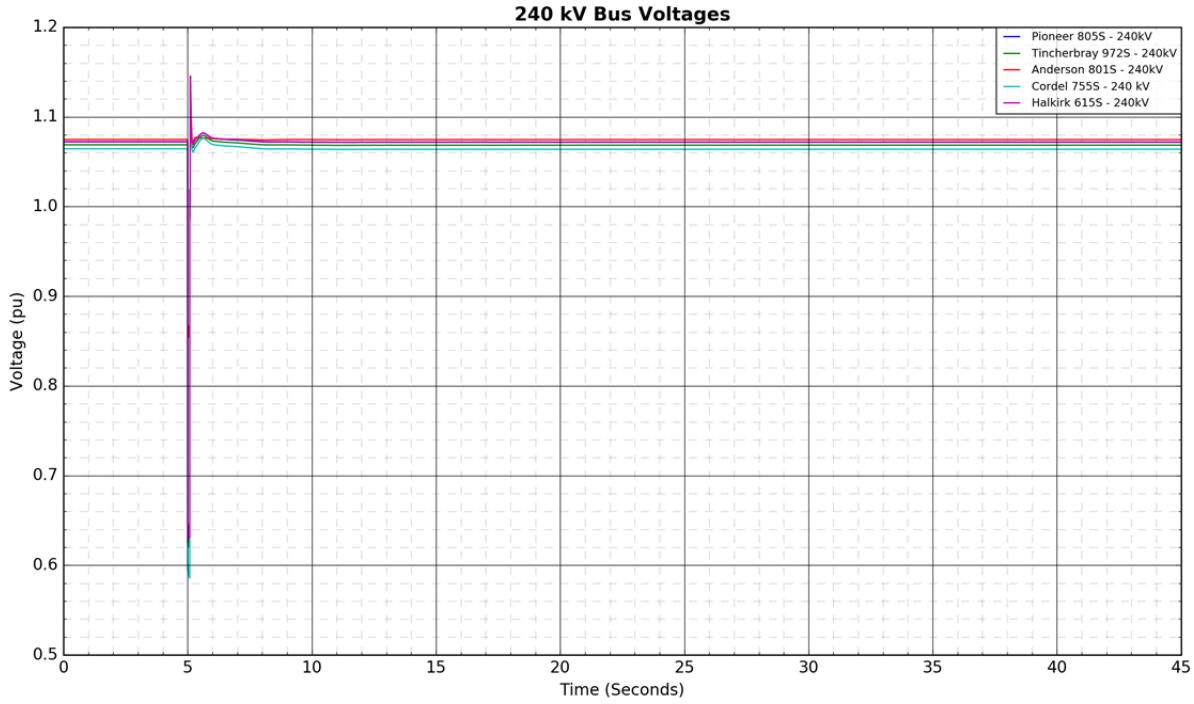

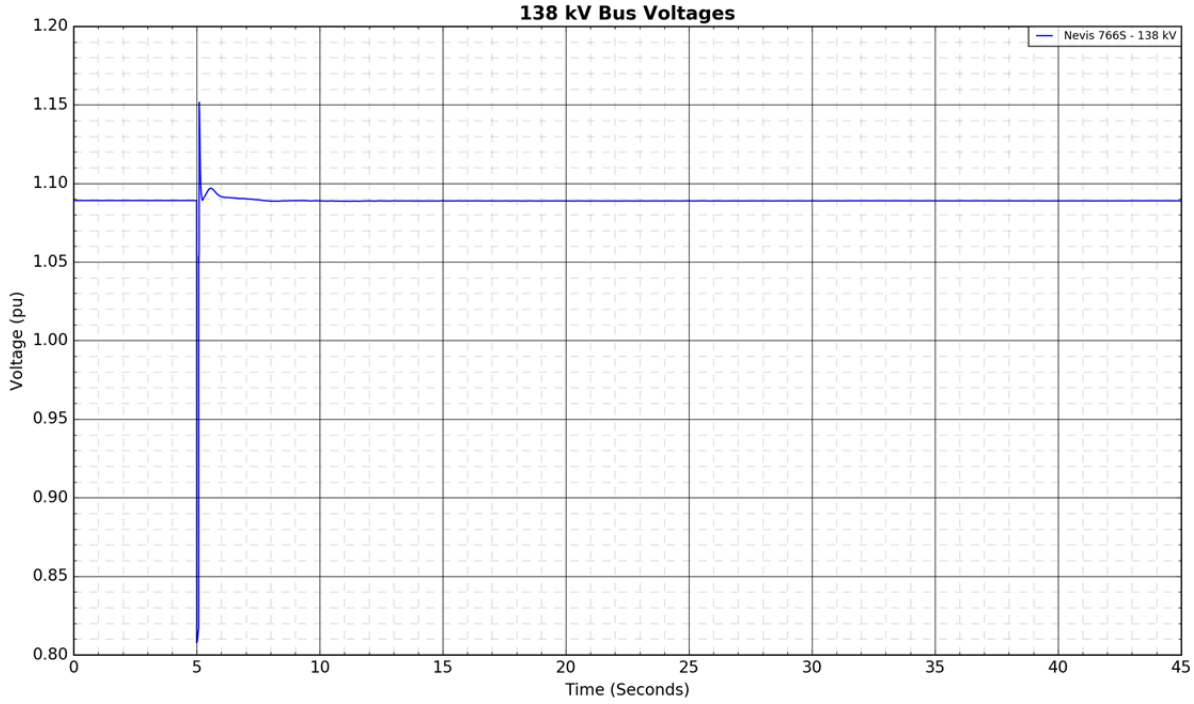

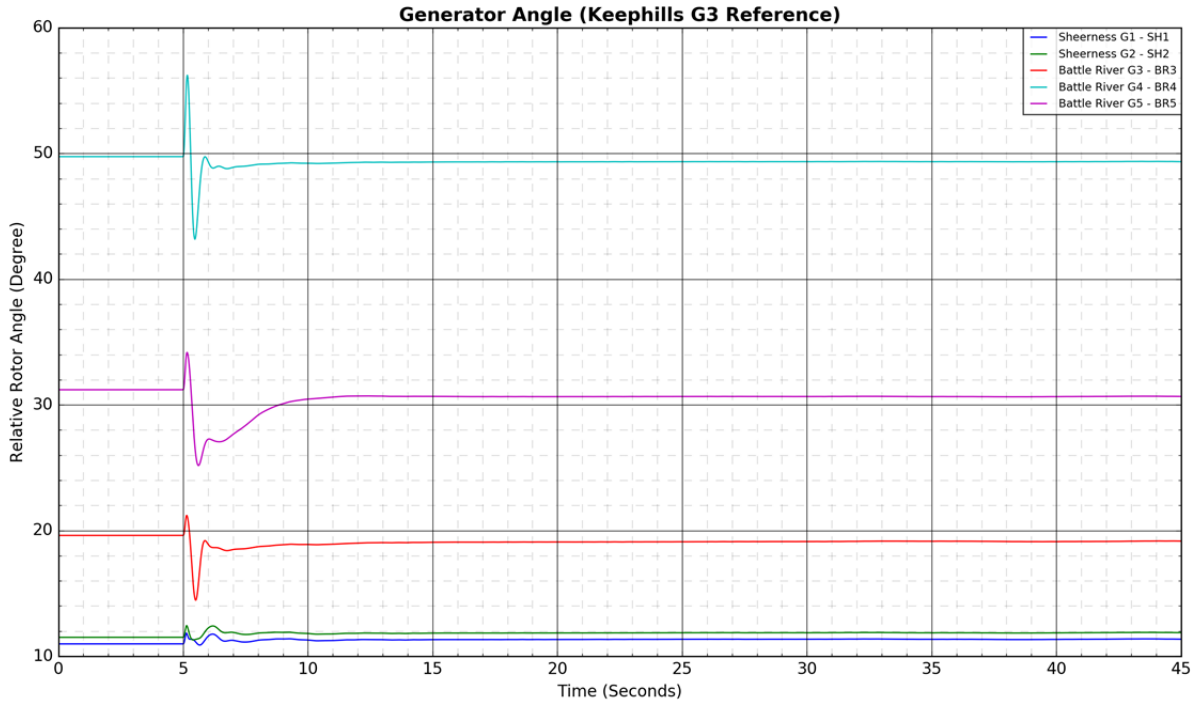
Generator Angle (Keephills G3 Reference)
Relative Rotor Angle (Degree)
Time (Seconds)
Sheerness G1 - SH1
Sheerness G2 - SH2
Battle River G3 - BR3
Battle River G4 - BR4
Battle River G5 - BR5
60
50
40
30
20
10
0
5
10
15
20
25
30
35
40
45

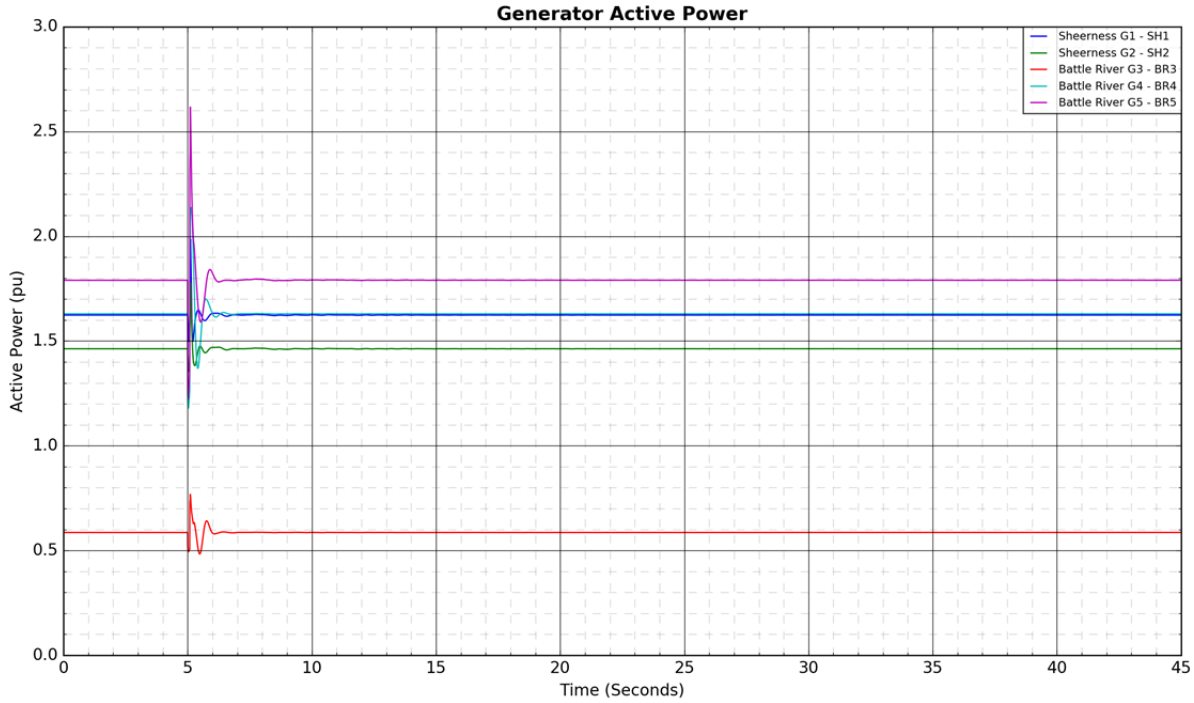
Generator Active Power
Active Power (pu)
Time (Seconds)
Sheerness G1 - SH1
Sheerness G2 - SH2
Battle River G3 - BR3
Battle River G4 - BR4
Battle River G5 - BR5
3.0
2.5
2.0
1.5
1.0
0.5
0.0
0
5
10
15
20
25
30
35
40
45

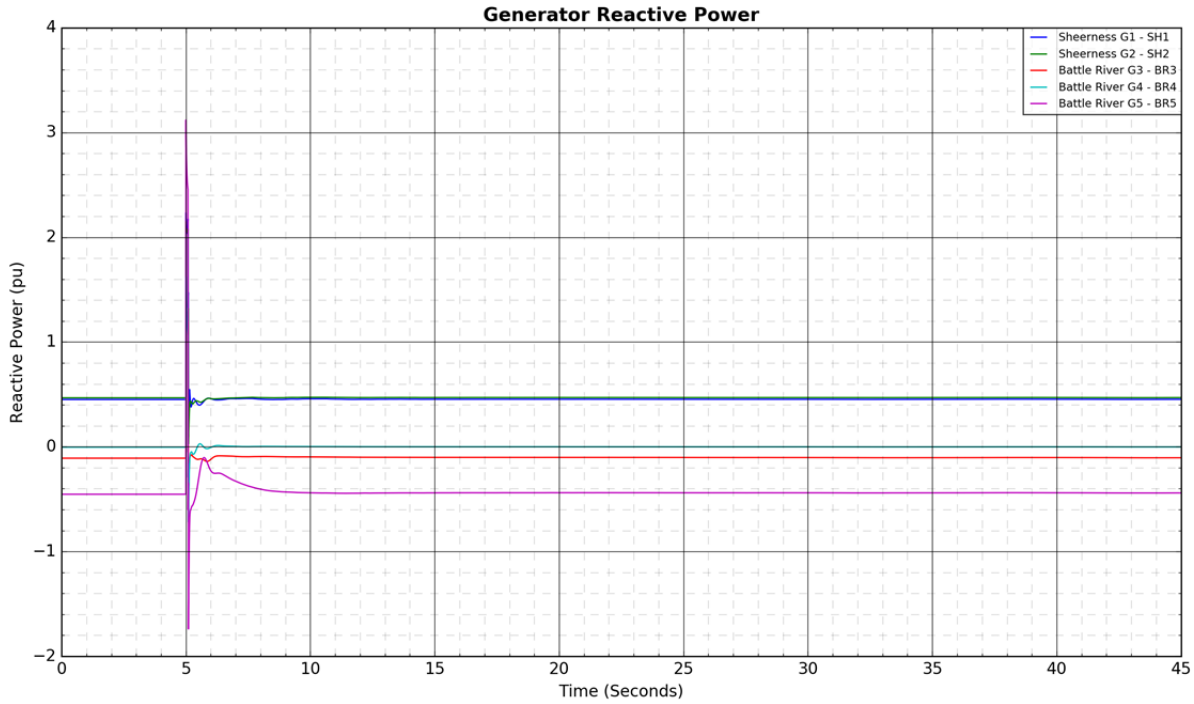
Generator Reactive Power
Sheerness G1 - SH1
Sheerness G2 - SH2
Battle River G3 - BR3
Battle River G4 - BR4
Battle River G5 - BR5
Reactive Power (pu)
Time (Seconds)

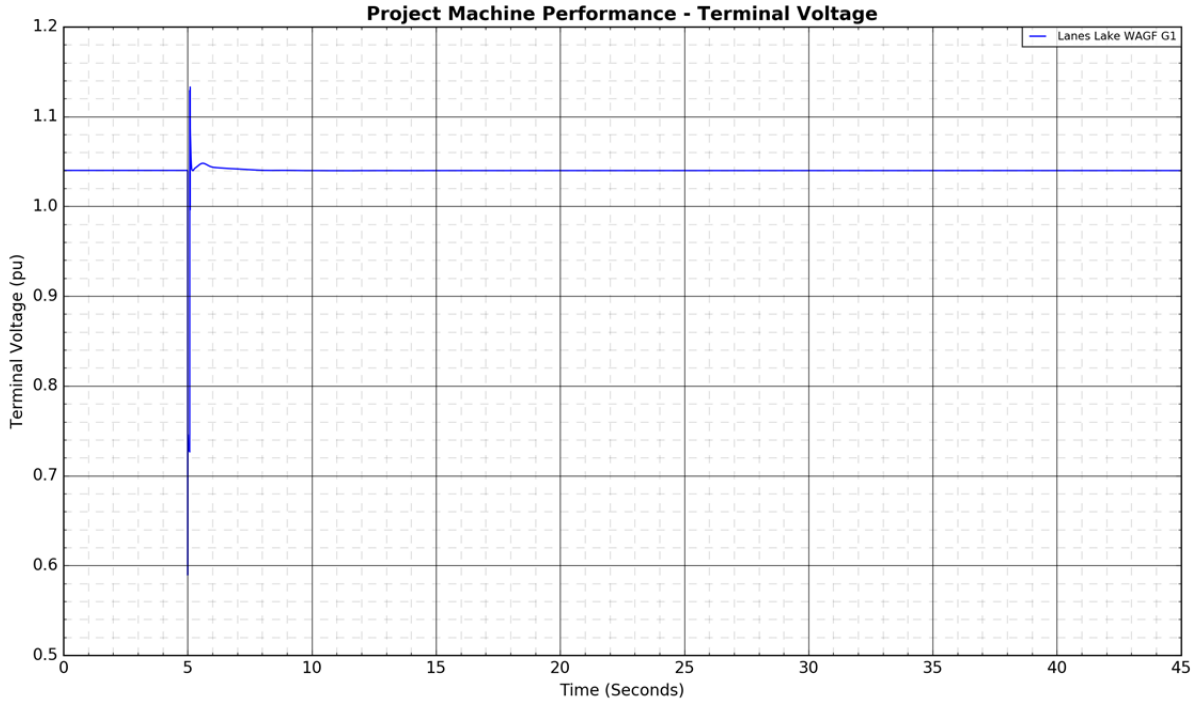
Project Machine Performance - Terminal Voltage
Lanes Lake WAGF G1
Terminal Voltage (pu)
Time (Seconds)


Project Machine Performance - Active Power
Lanes Lake WAGF G1
Active Power (pu)
Time (Seconds)
2.2
2.0
1.8
1.6
1.4
1.2
1.0
0.8
0
5
10
15
20
25
30
35
40
45

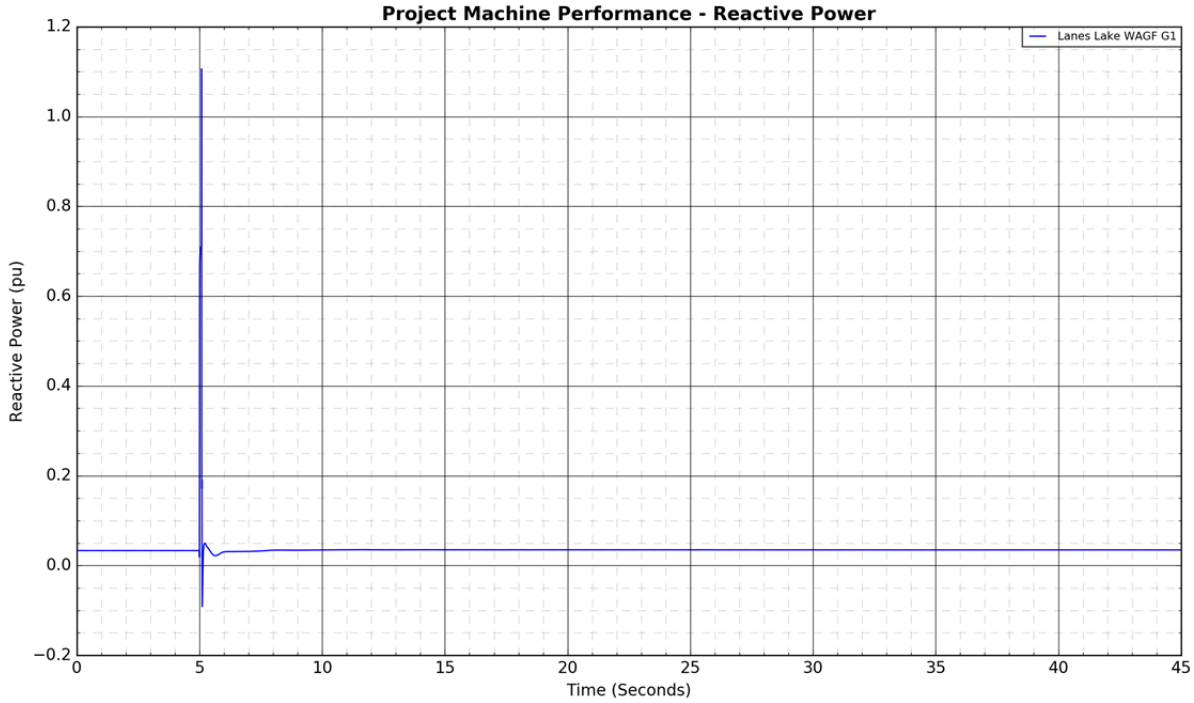
Project Machine Performance - Reactive Power
Lanes Lake WAGF G1
Reactive Power (pu)
Time (Seconds)
1.2
1.0
0.8
0.6
0.4
0.2
0.0
−0.2
0
5
10
15
20
25
30
35
40
45


Branch Active Power Flows
9L93 (Pioneer 805S - Halkirk 615S)
9L175 (Pioneer 805S - Tincherbray 972S)
9L16 (Tincherbray 972S - Cordel 755S)
9L59 (Anderson 801S - Tinchebray 972S)
Active Power (MW)
Time (Seconds)

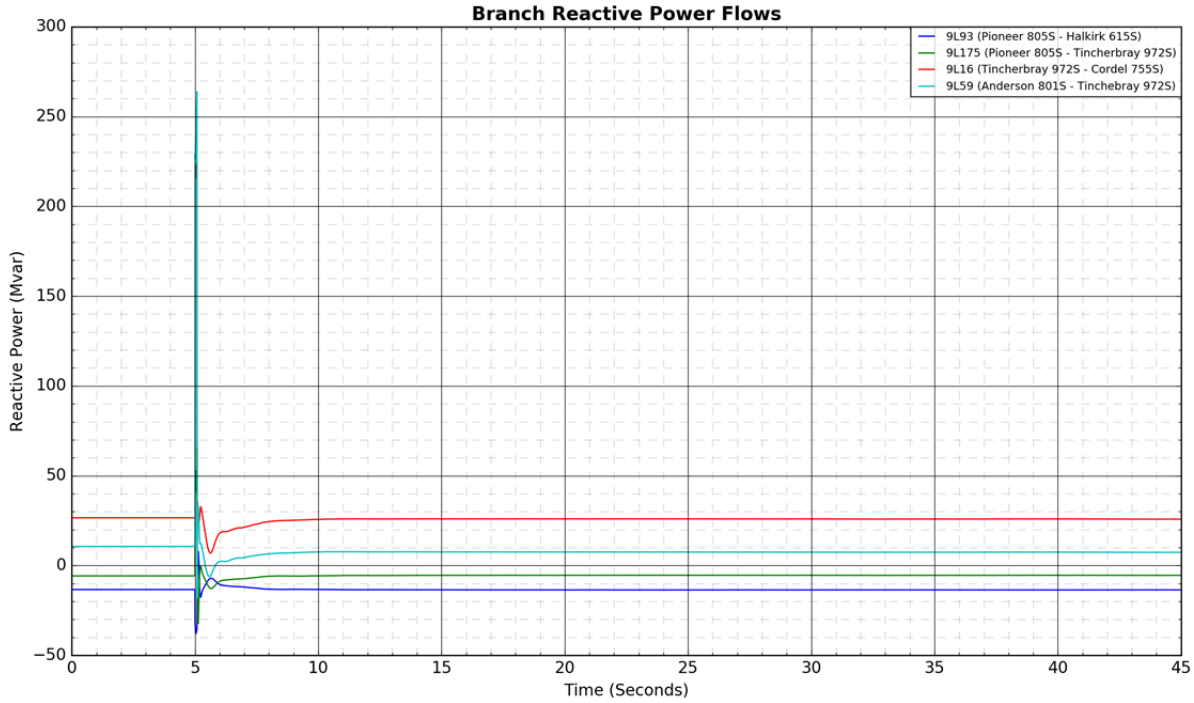
Branch Reactive Power Flows
9L93 (Pioneer 805S - Halkirk 615S)
9L175 (Pioneer 805S - Tincherbray 972S)
9L16 (Tincherbray 972S - Cordel 755S)
9L59 (Anderson 801S - Tinchebray 972S)
Reactive Power (Mvar)
Time (Seconds)

Figure A4-27: 912L\9L912 (Nevis 766S - Red Deer 63S): 3-phase fault at Nevis 766S

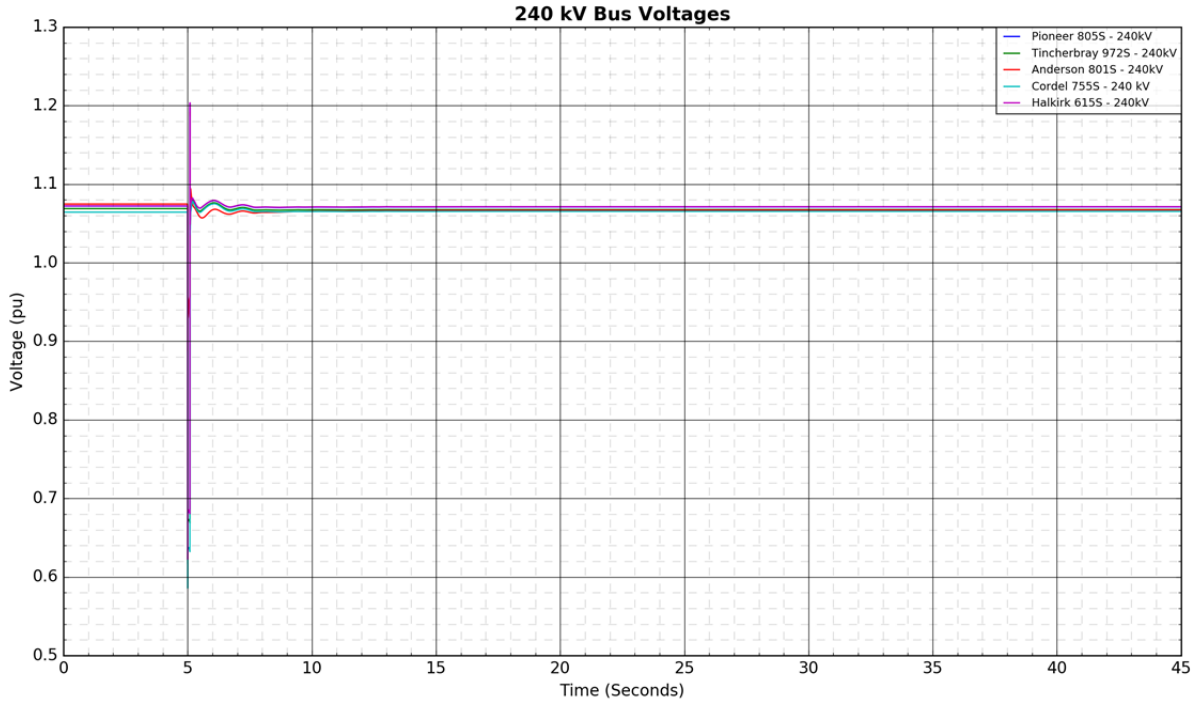

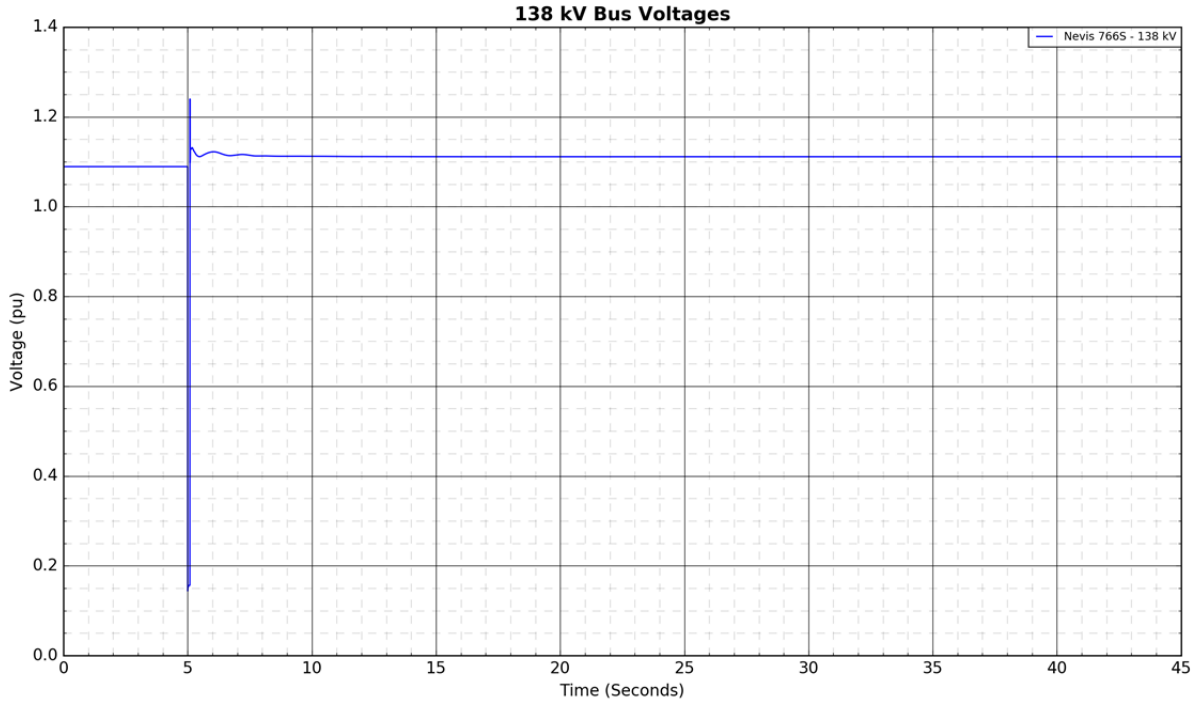

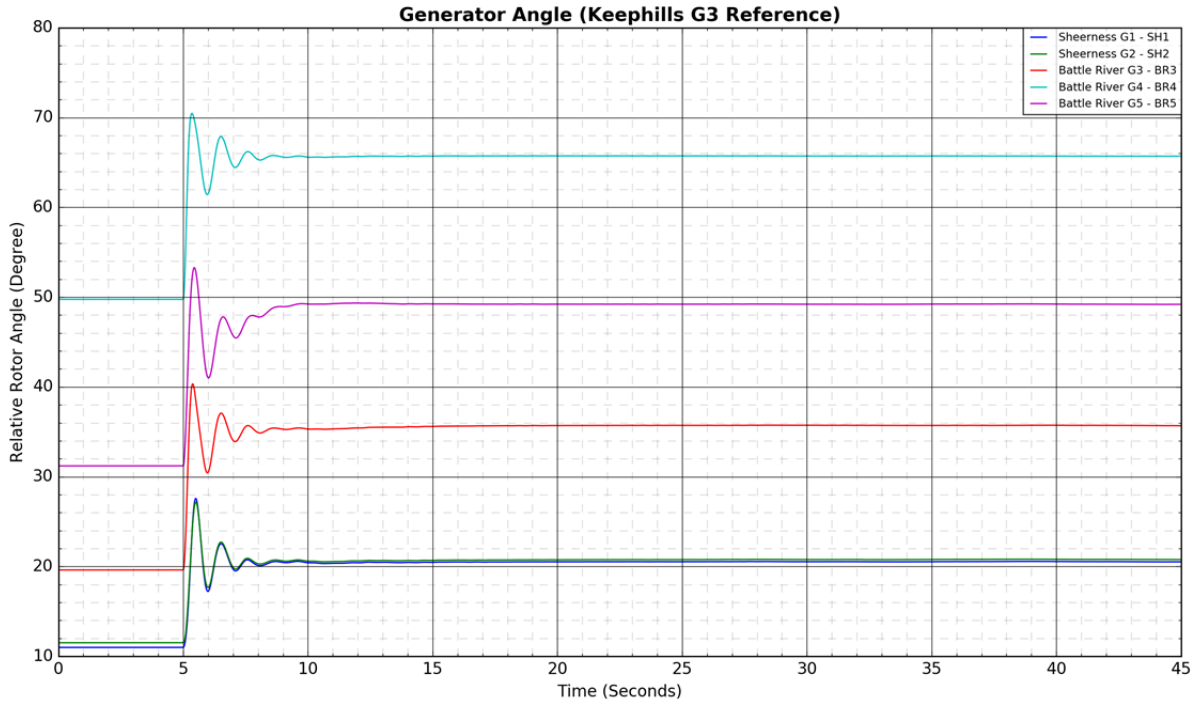
Generator Angle (Keephills G3 Reference)
Relative Rotor Angle (Degree)
Time (Seconds)
Sheerness G1 - SH1
Sheerness G2 - SH2
Battle River G3 - BR3
Battle River G4 - BR4
Battle River G5 - BR5

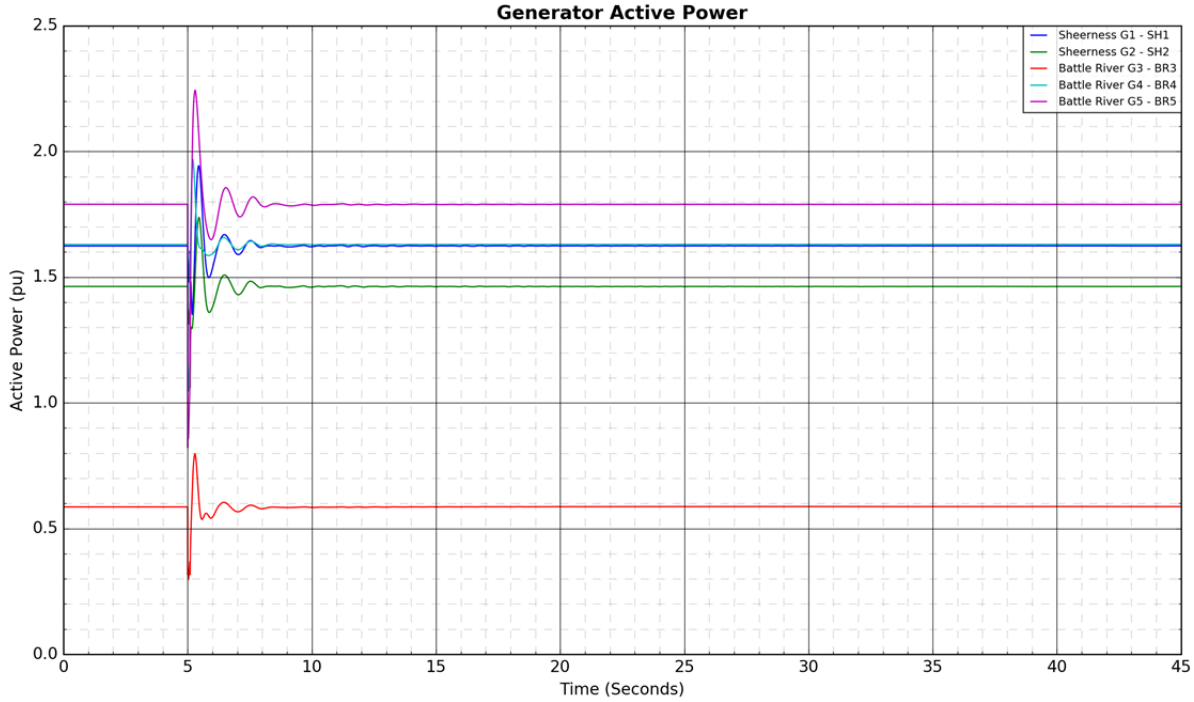
Generator Active Power
Active Power (pu)
Time (Seconds)
Sheerness G1 - SH1
Sheerness G2 - SH2
Battle River G3 - BR3
Battle River G4 - BR4
Battle River G5 - BR5

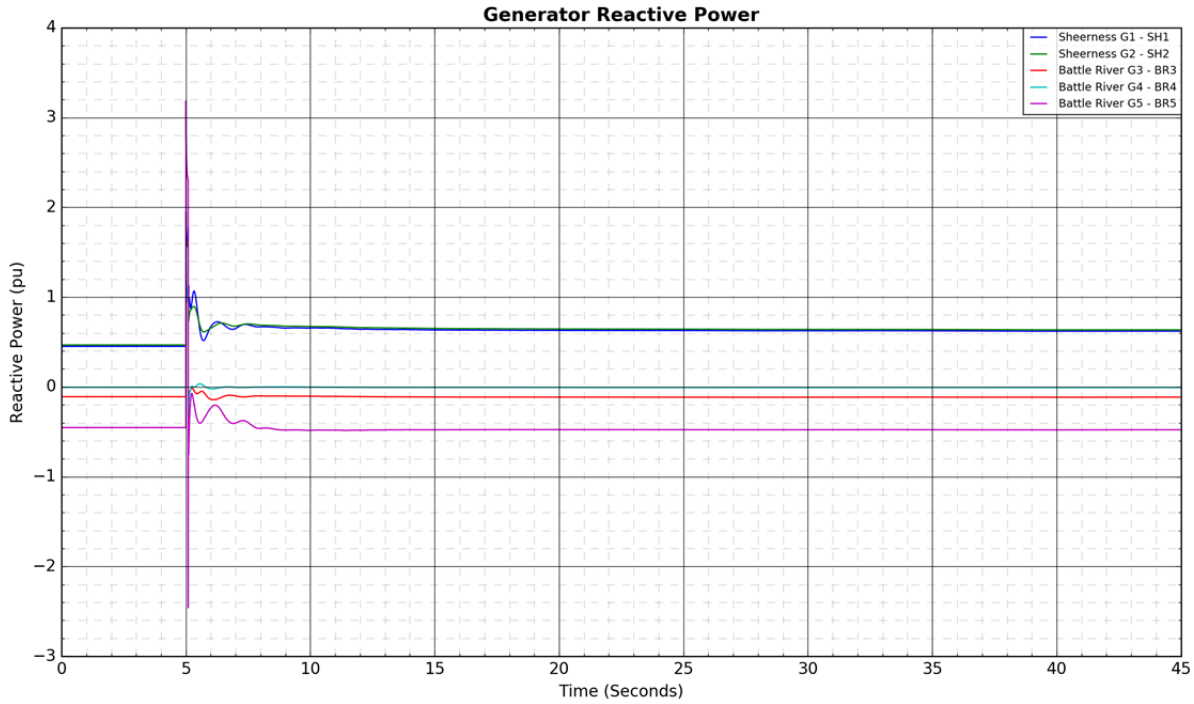
Generator Reactive Power
Sheerness G1 - SH1
Sheerness G2 - SH2
Battle River G3 - BR3
Battle River G4 - BR4
Battle River G5 - BR5
Reactive Power (pu)
Time (Seconds)

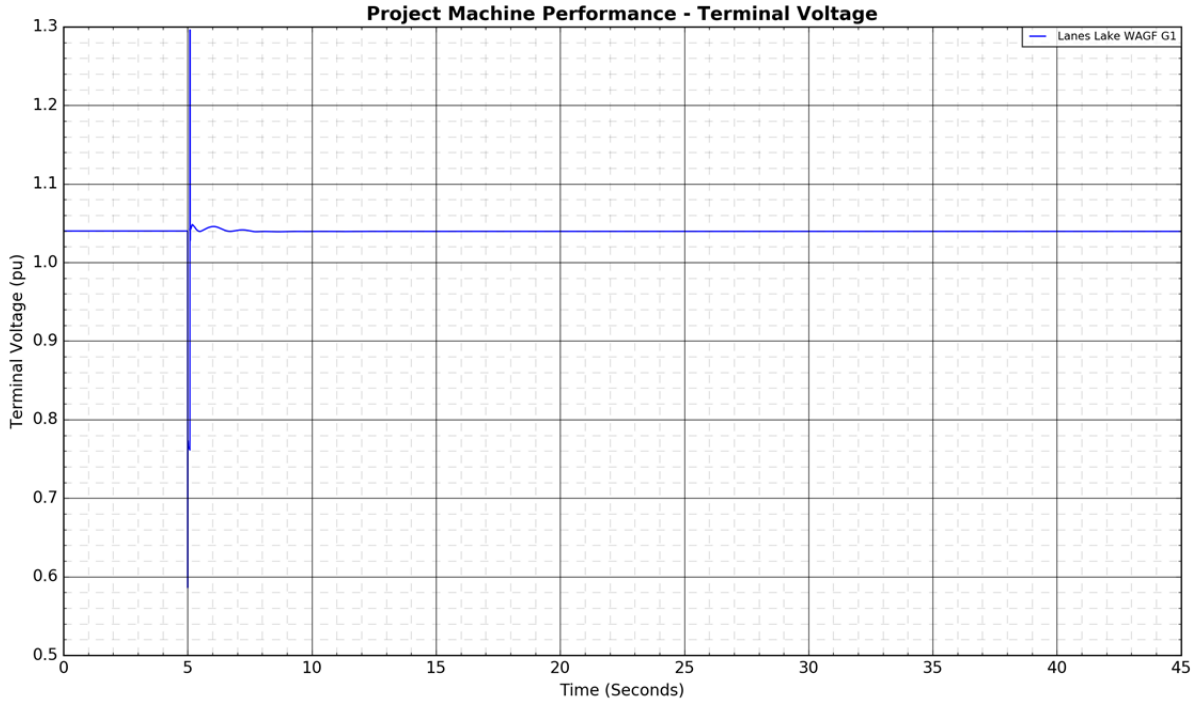
Project Machine Performance - Terminal Voltage
Lanes Lake WAGF G1
Terminal Voltage (pu)
Time (Seconds)


Project Machine Performance - Active Power
Lanes Lake WAGF G1
Active Power (pu)
Time (Seconds)
2.6
2.4
2.2
2.0
1.8
1.6
1.4
1.2
1.0
0.8
0
5
10
15
20
25
30
35
40
45

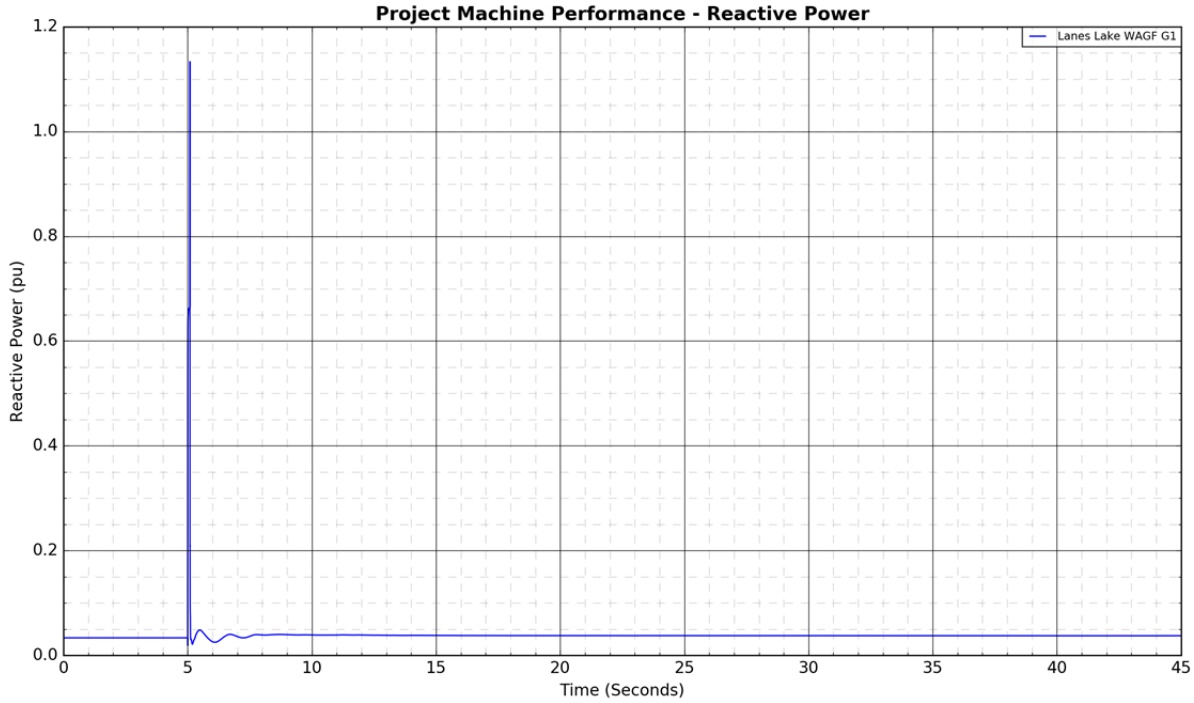
Project Machine Performance - Reactive Power
Lanes Lake WAGF G1
Reactive Power (pu)
Time (Seconds)
1.2
1.0
0.8
0.6
0.4
0.2
0.0
0
5
10
15
20
25
30
35
40
45


Branch Active Power Flows
9L93 (Pioneer 805S - Halkirk 615S)
9L175 (Pioneer 805S - Tincherbray 972S)
9L16 (Tincherbray 972S - Cordel 755S)
9L59 (Anderson 801S - Tinchebray 972S)
Active Power (MW)
Time (Seconds)

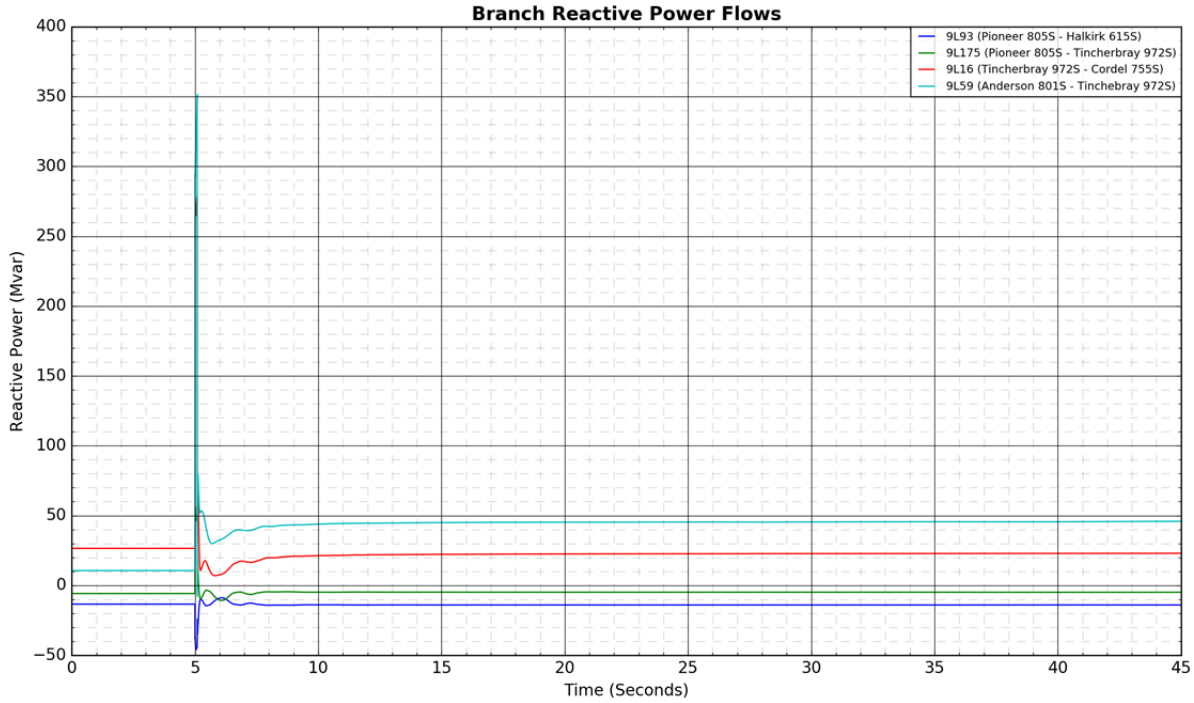
Branch Reactive Power Flows
9L93 (Pioneer 805S - Halkirk 615S)
9L175 (Pioneer 805S - Tincherbray 972S)
9L16 (Tincherbray 972S - Cordel 755S)
9L59 (Anderson 801S - Tinchebray 972S)
Reactive Power (Mvar)
Time (Seconds)

Figure A4-28: 912L\9L912 (Nevis 766S - Red Deer 63S): 3-phase fault at Red Deer 63S

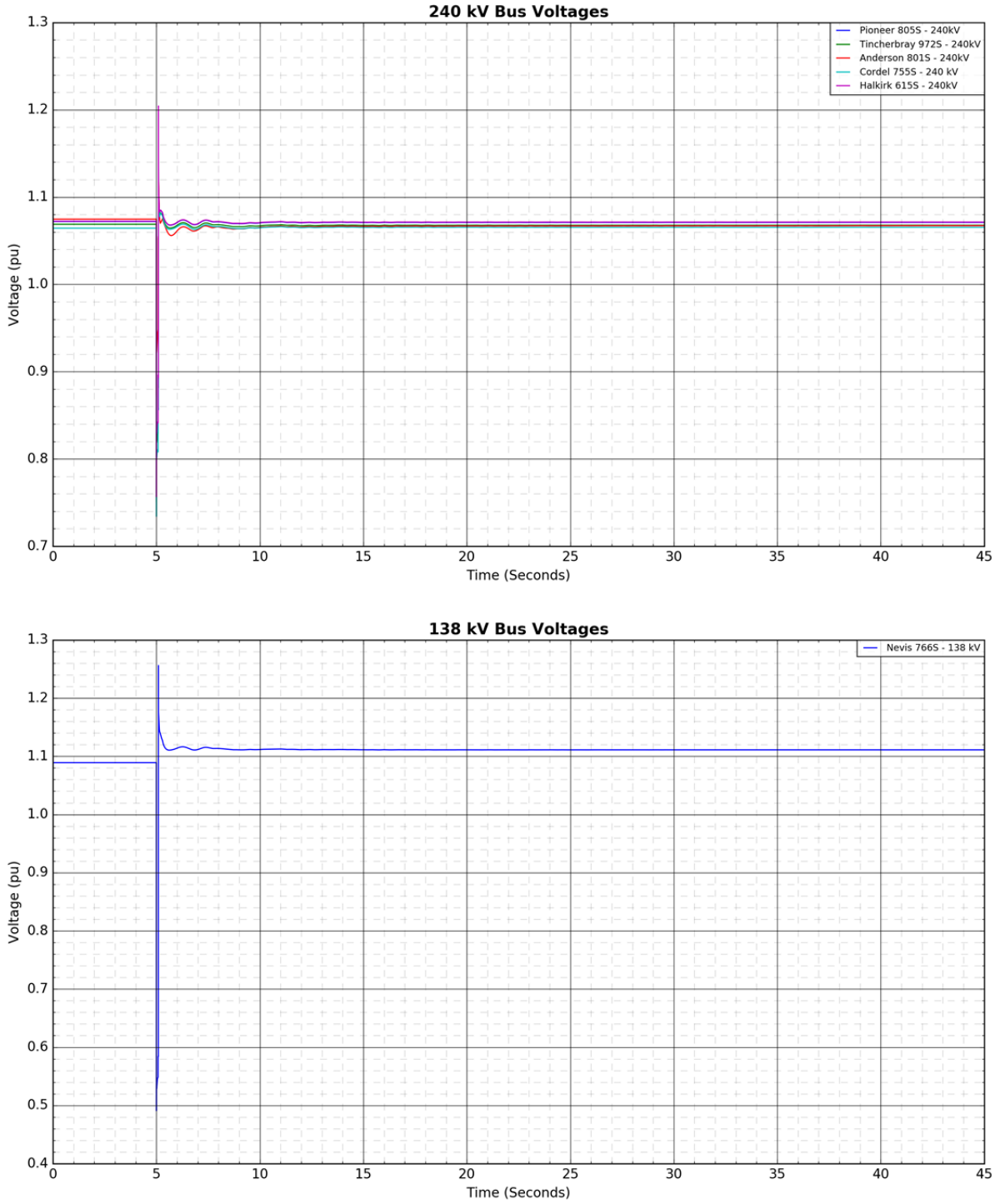

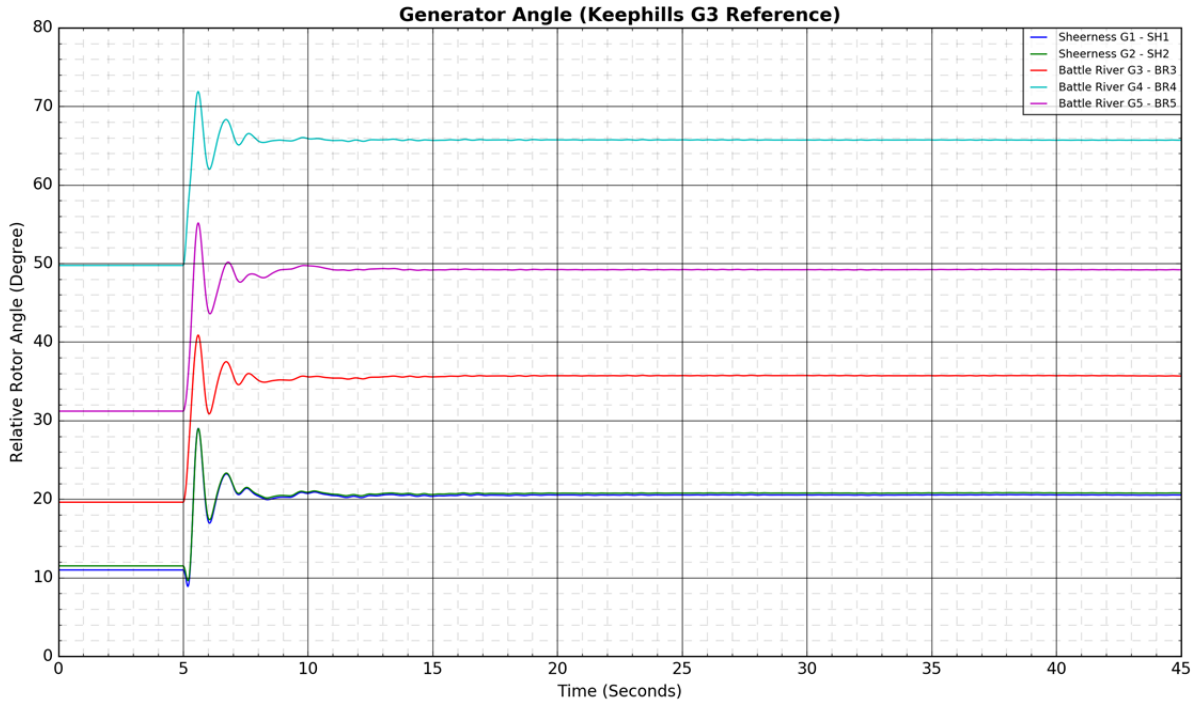
Generator Angle (Keephills G3 Reference)
Relative Rotor Angle (Degree)
Time (Seconds)
Sheerness G1 - SH1
Sheerness G2 - SH2
Battle River G3 - BR3
Battle River G4 - BR4
Battle River G5 - BR5
0
10
20
30
40
50
60
70
80
0
5
10
15
20
25
30
35
40
45

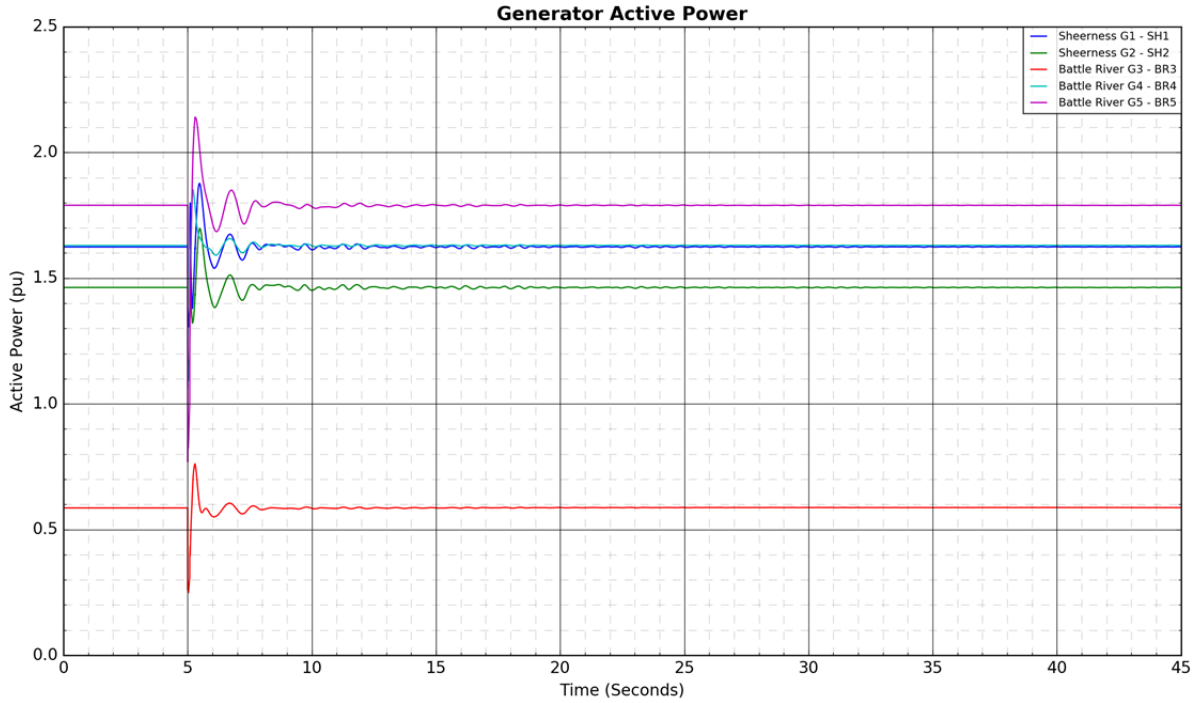
Generator Active Power
Active Power (pu)
Time (Seconds)
Sheerness G1 - SH1
Sheerness G2 - SH2
Battle River G3 - BR3
Battle River G4 - BR4
Battle River G5 - BR5
0.0
0.5
1.0
1.5
2.0
2.5
0
5
10
15
20
25
30
35
40
45

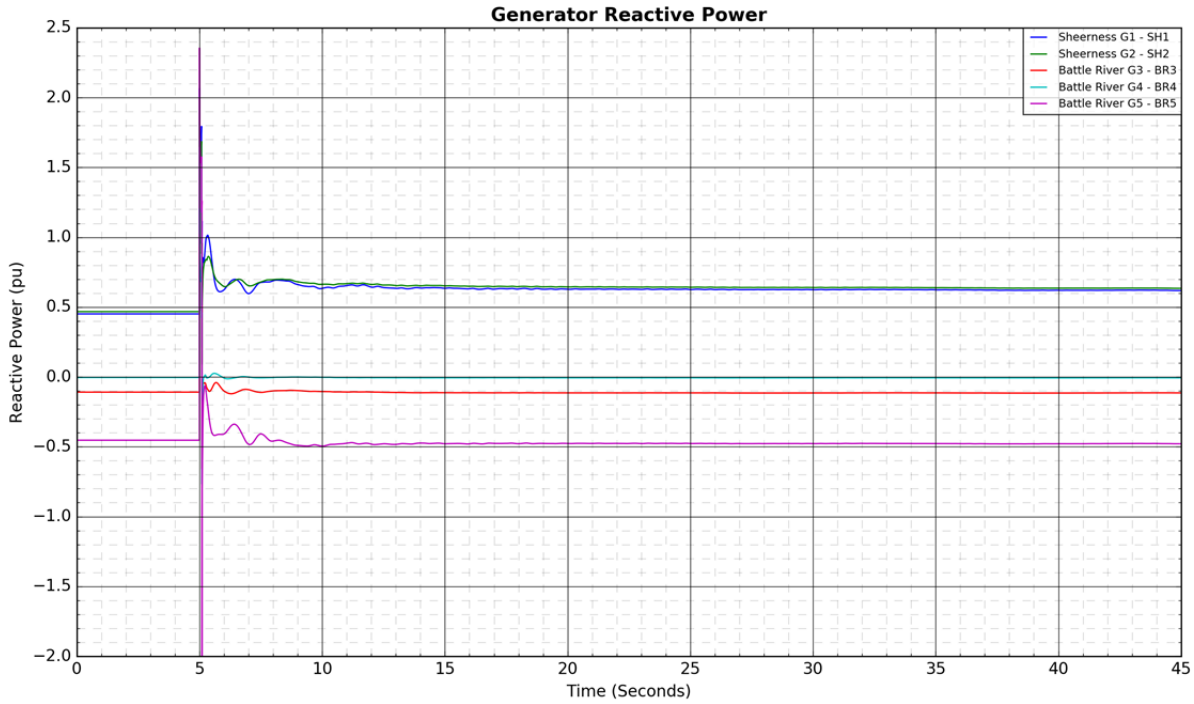
Generator Reactive Power
Sheerness G1 - SH1
Sheerness G2 - SH2
Battle River G3 - BR3
Battle River G4 - BR4
Battle River G5 - BR5
Reactive Power (pu)
Time (Seconds)

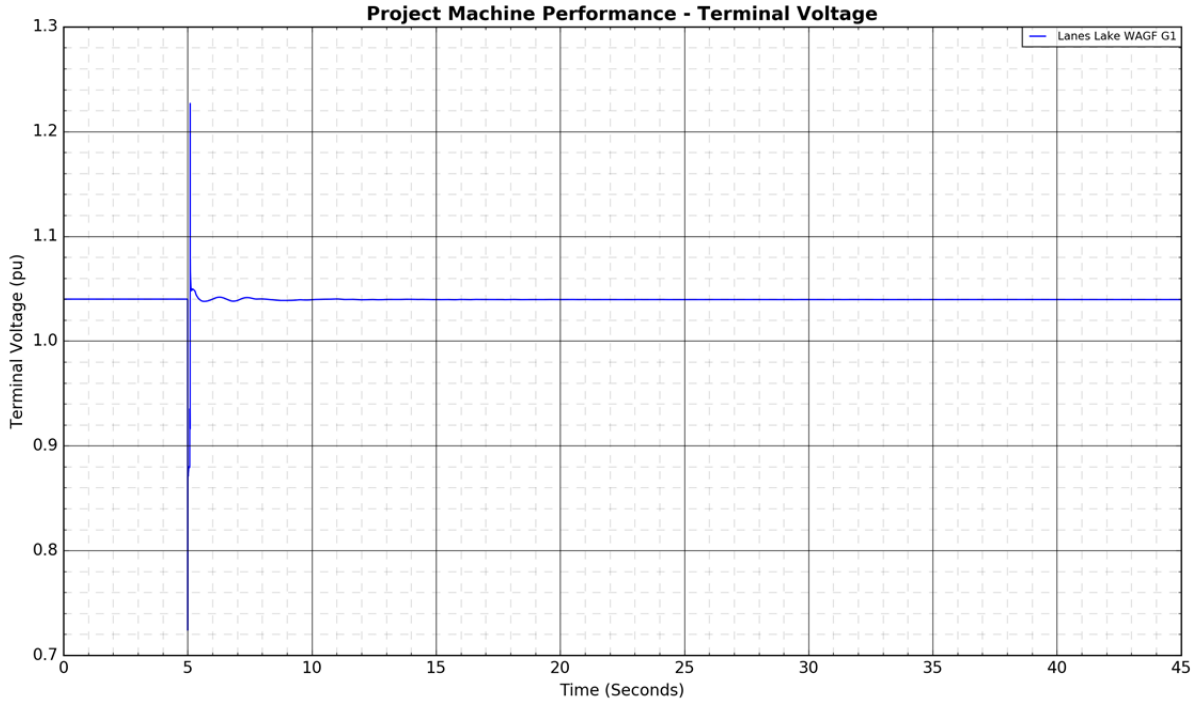
Project Machine Performance - Terminal Voltage
Lanes Lake WAGF G1
Terminal Voltage (pu)
Time (Seconds)


Project Machine Performance - Active Power
Lanes Lake WAGF G1
Active Power (pu)
Time (Seconds)
2.2
2.0
1.8
1.6
1.4
1.2
1.0
0
5
10
15
20
25
30
35
40
45

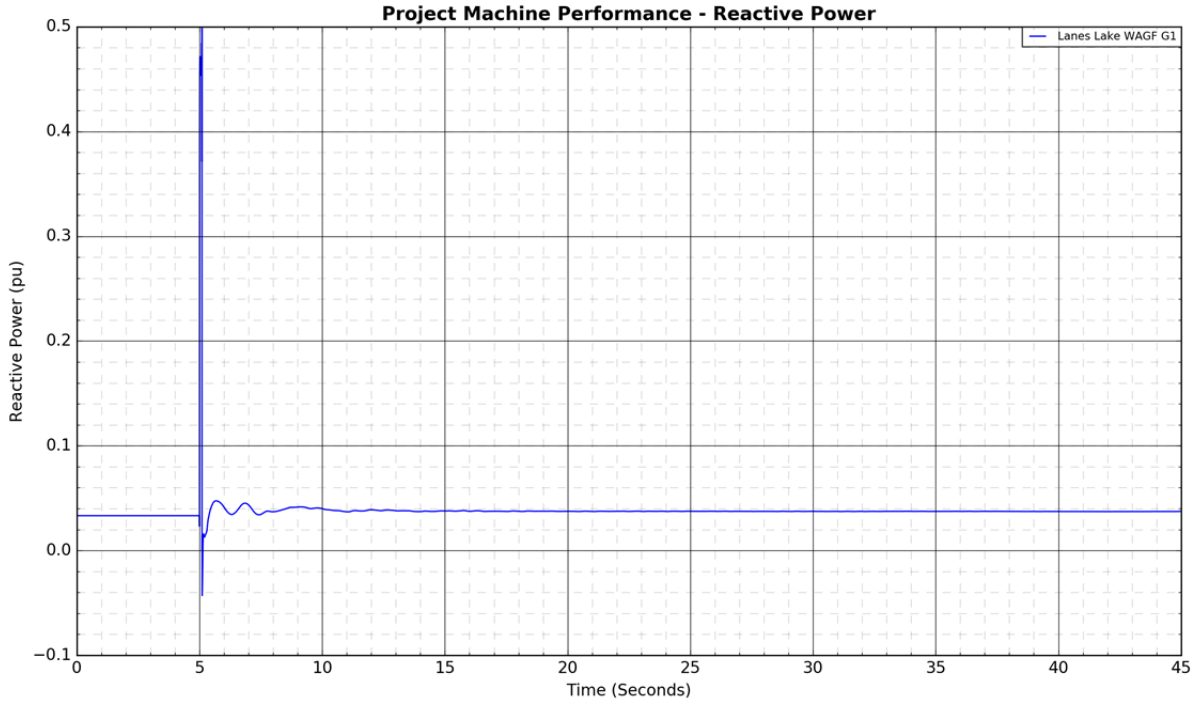
Project Machine Performance - Reactive Power
Lanes Lake WAGF G1
Reactive Power (pu)
Time (Seconds)
0.5
0.4
0.3
0.2
0.1
0.0
−0.1
0
5
10
15
20
25
30
35
40
45

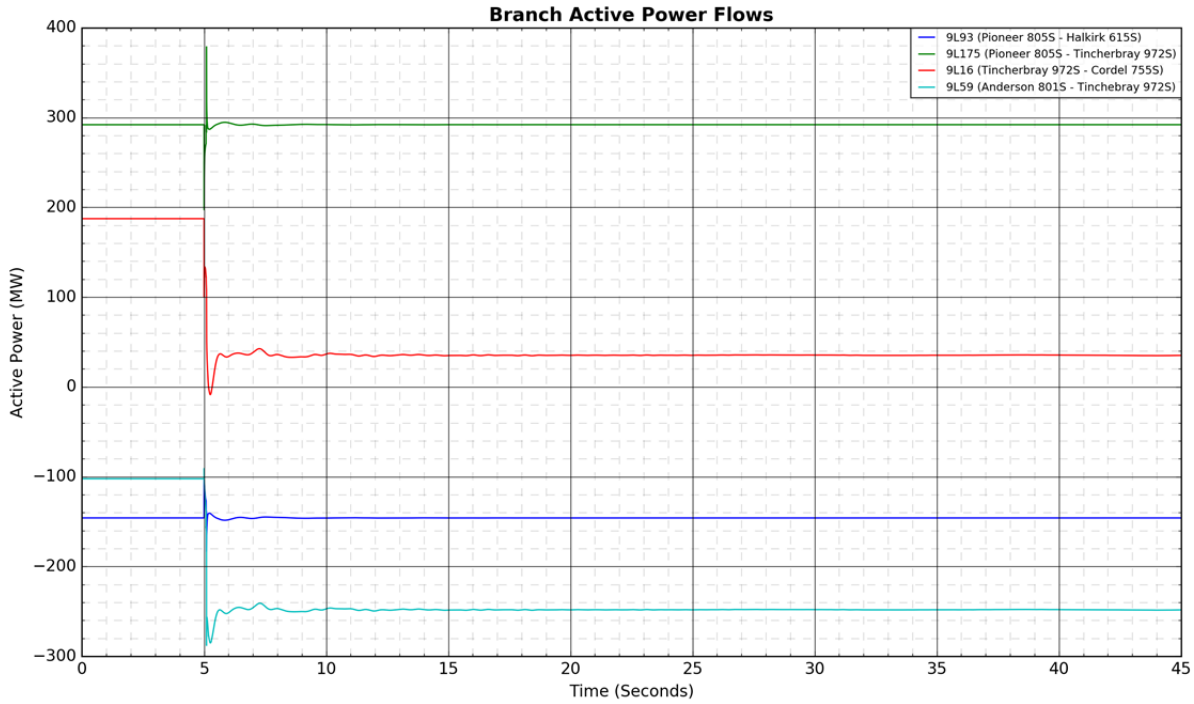
Branch Active Power Flows
9L93 (Pioneer 805S - Halkirk 615S)
9L175 (Pioneer 805S - Tincherbray 972S)
9L16 (Tincherbray 972S - Cordel 755S)
9L59 (Anderson 801S - Tinchebray 972S)
Active Power (MW)
Time (Seconds)

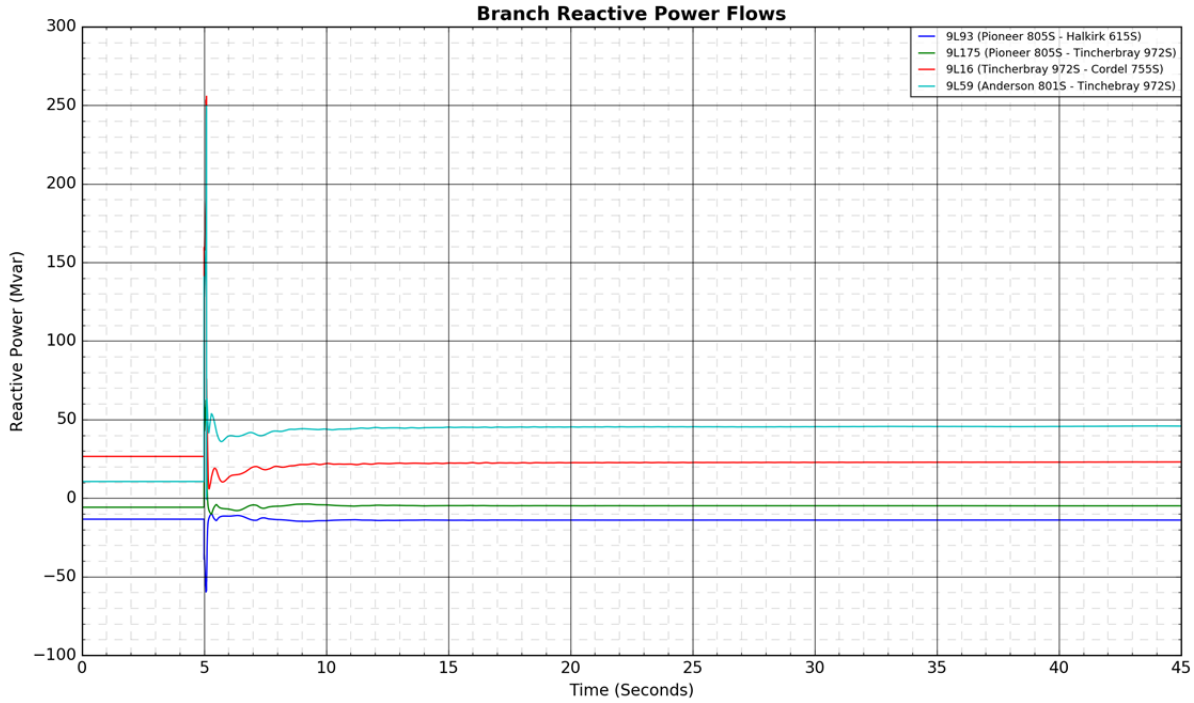
Branch Reactive Power Flows
9L93 (Pioneer 805S - Halkirk 615S)
9L175 (Pioneer 805S - Tincherbray 972S)
9L16 (Tincherbray 972S - Cordel 755S)
9L59 (Anderson 801S - Tinchebray 972S)
Reactive Power (Mvar)
Time (Seconds)

3. Stability Results 2019 Summer Peak - Case A

Figure A4-29: 9L24 (Oakland 946S - Lanfine 959S): 3-phase fault at Oakland 946S



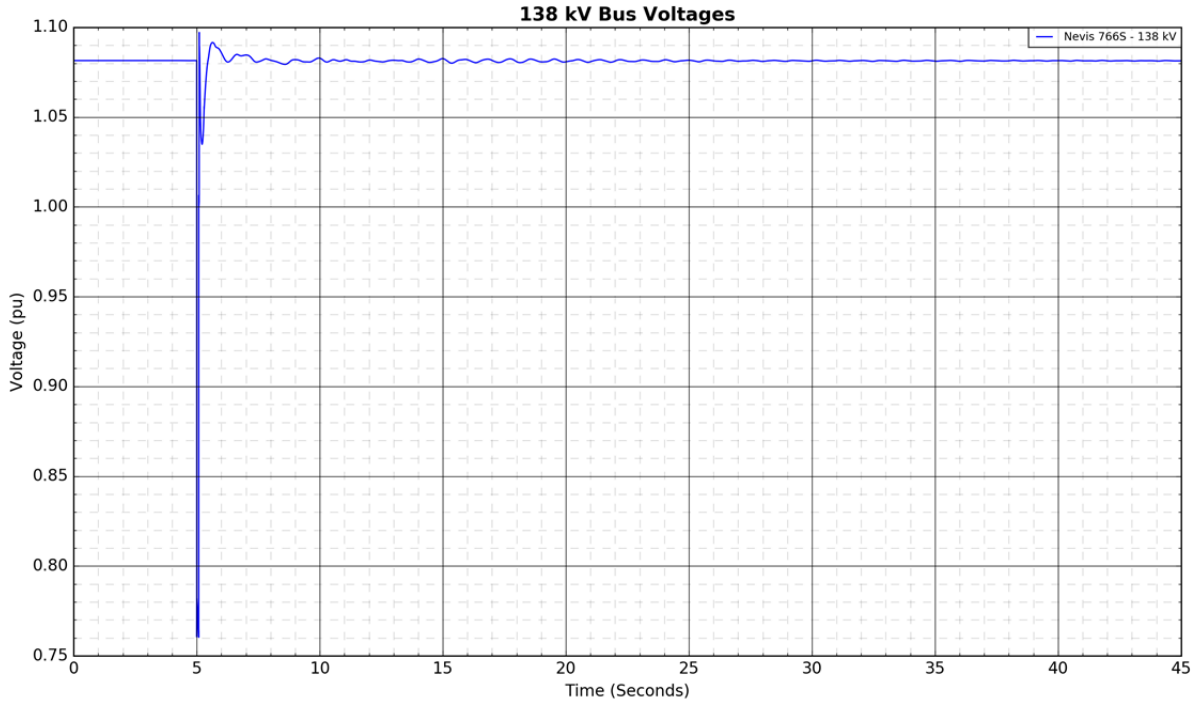

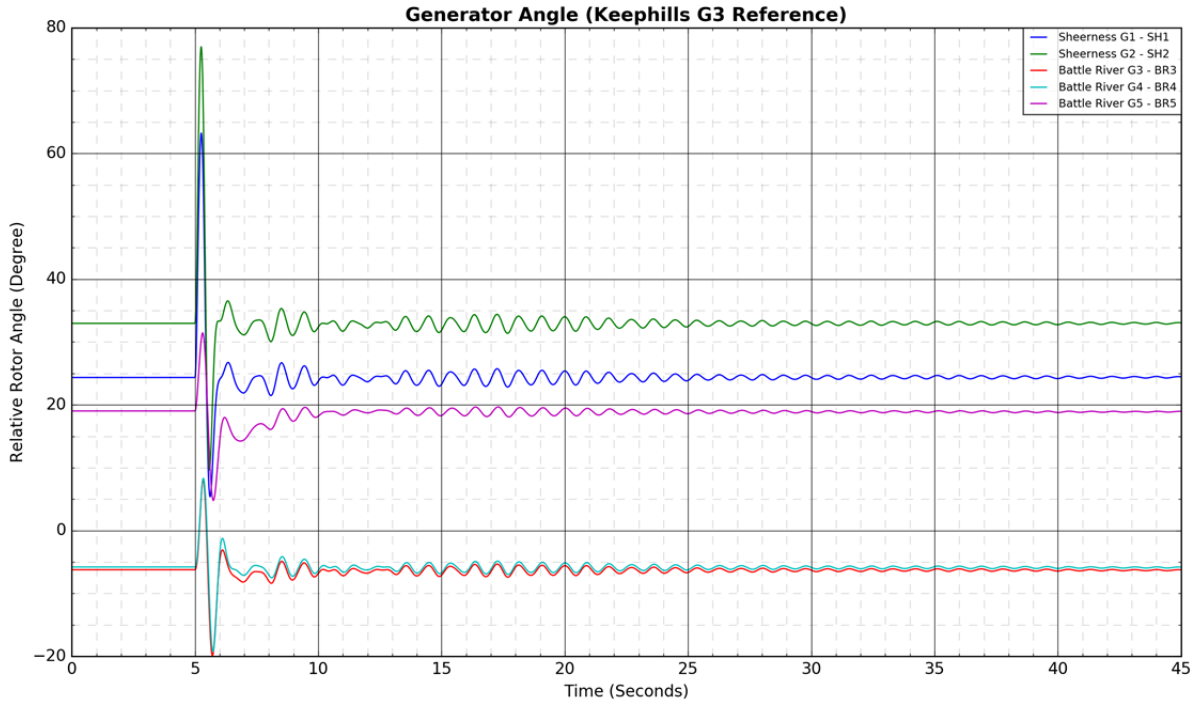
Generator Angle (Keephills G3 Reference)
Relative Rotor Angle (Degree)
Time (Seconds)
Sheerness G1 - SH1
Sheerness G2 - SH2
Battle River G3 - BR3
Battle River G4 - BR4
Battle River G5 - BR5

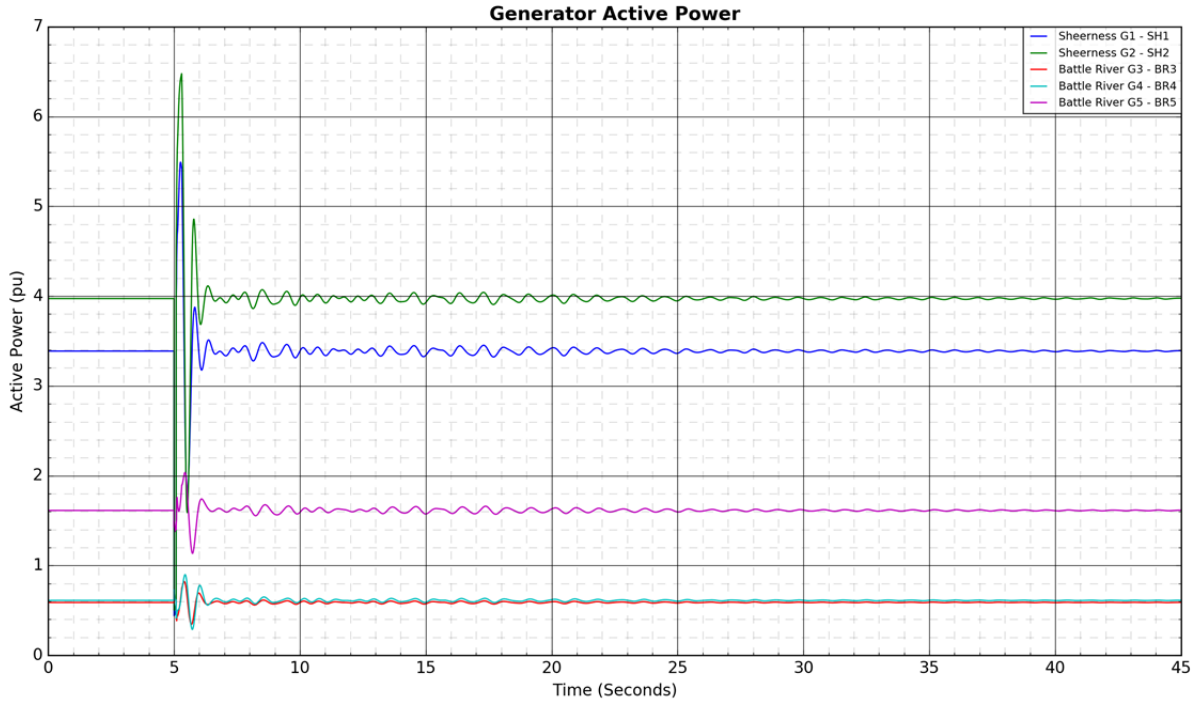
Generator Active Power
Active Power (pu)
Time (Seconds)
Sheerness G1 - SH1
Sheerness G2 - SH2
Battle River G3 - BR3
Battle River G4 - BR4
Battle River G5 - BR5

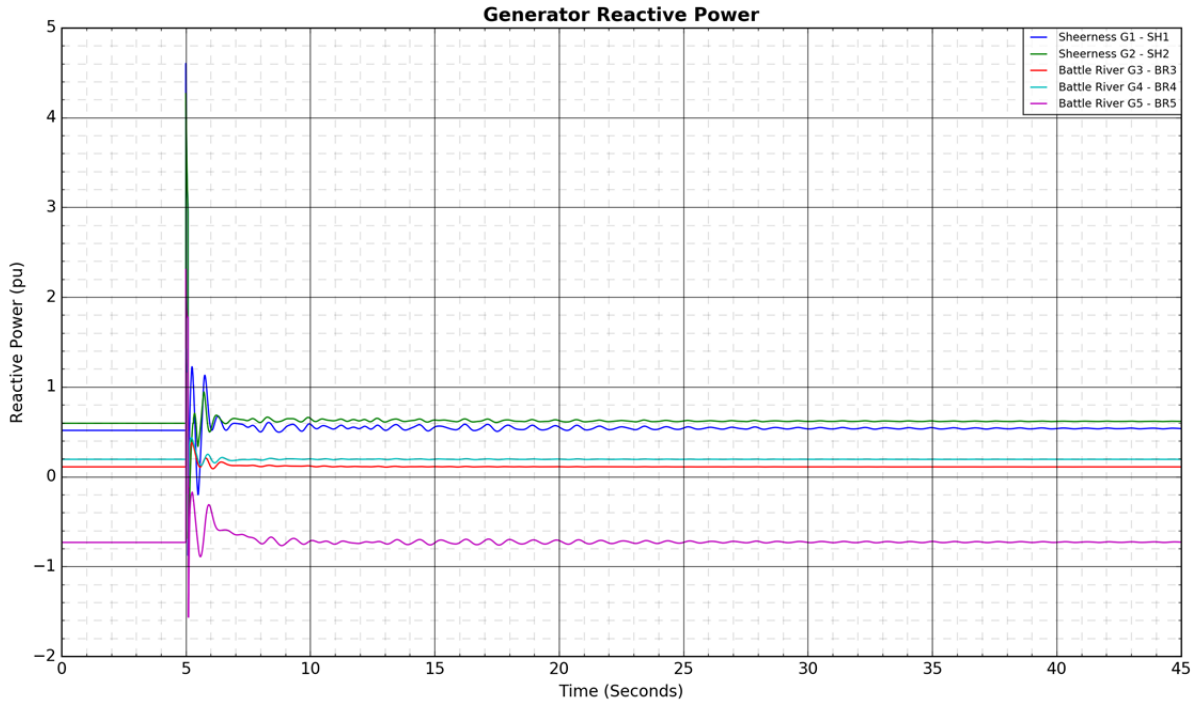
Generator Reactive Power
Sheerness G1 - SH1
Sheerness G2 - SH2
Battle River G3 - BR3
Battle River G4 - BR4
Battle River G5 - BR5
Reactive Power (pu)
Time (Seconds)

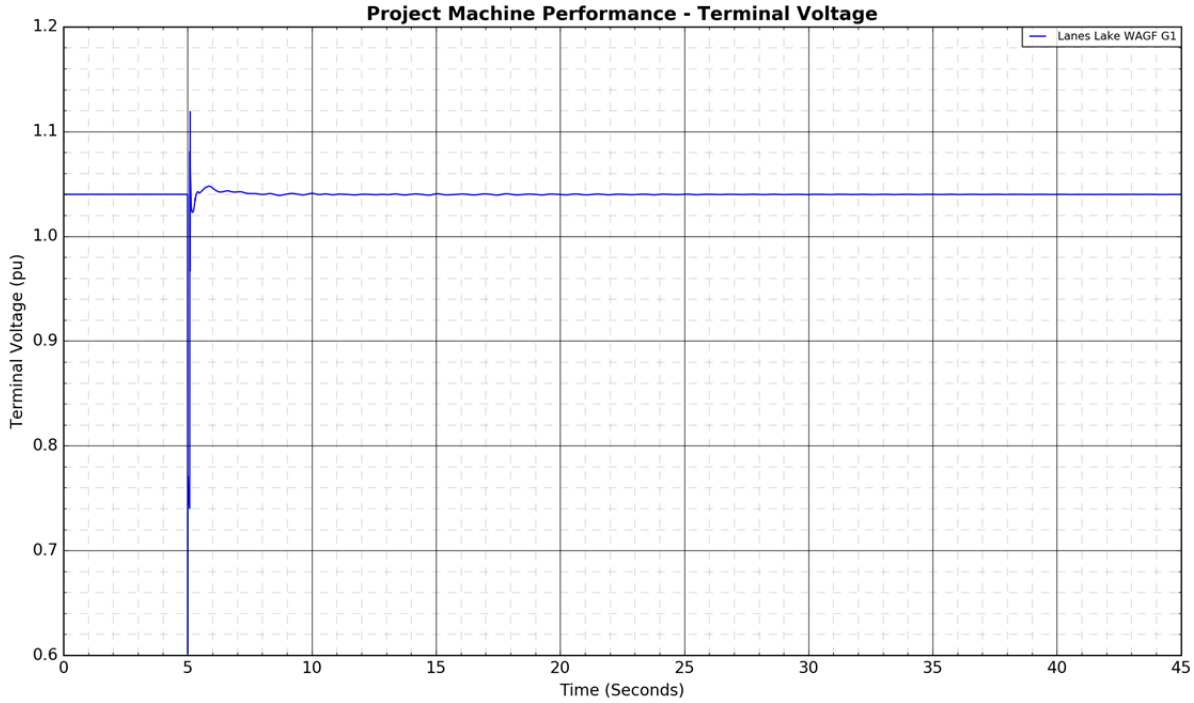
Project Machine Performance - Terminal Voltage
Lanes Lake WAGF G1
Terminal Voltage (pu)
Time (Seconds)


Project Machine Performance - Active Power
Lanes Lake WAGF G1
Active Power (pu)
Time (Seconds)
2.2
2.0
1.8
1.6
1.4
1.2
1.0
0.8
0
5
10
15
20
25
30
35
40
45

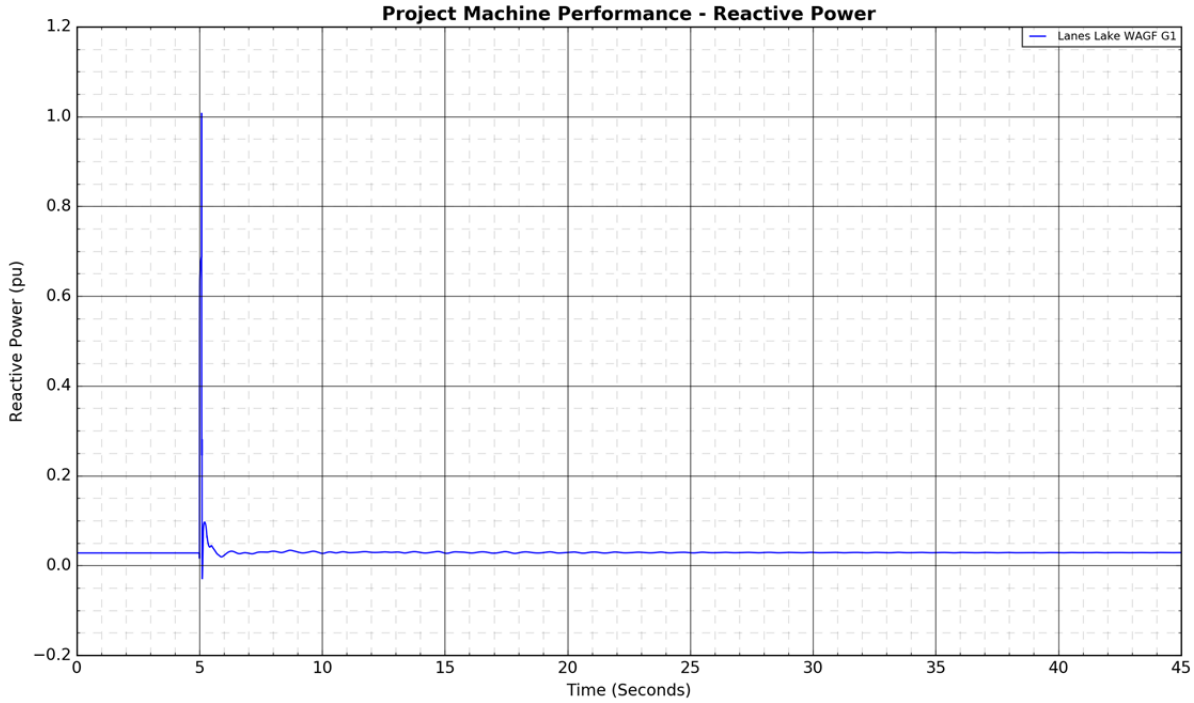
Project Machine Performance - Reactive Power
Lanes Lake WAGF G1
Reactive Power (pu)
Time (Seconds)
1.2
1.0
0.8
0.6
0.4
0.2
0.0
−0.2
0
5
10
15
20
25
30
35
40
45

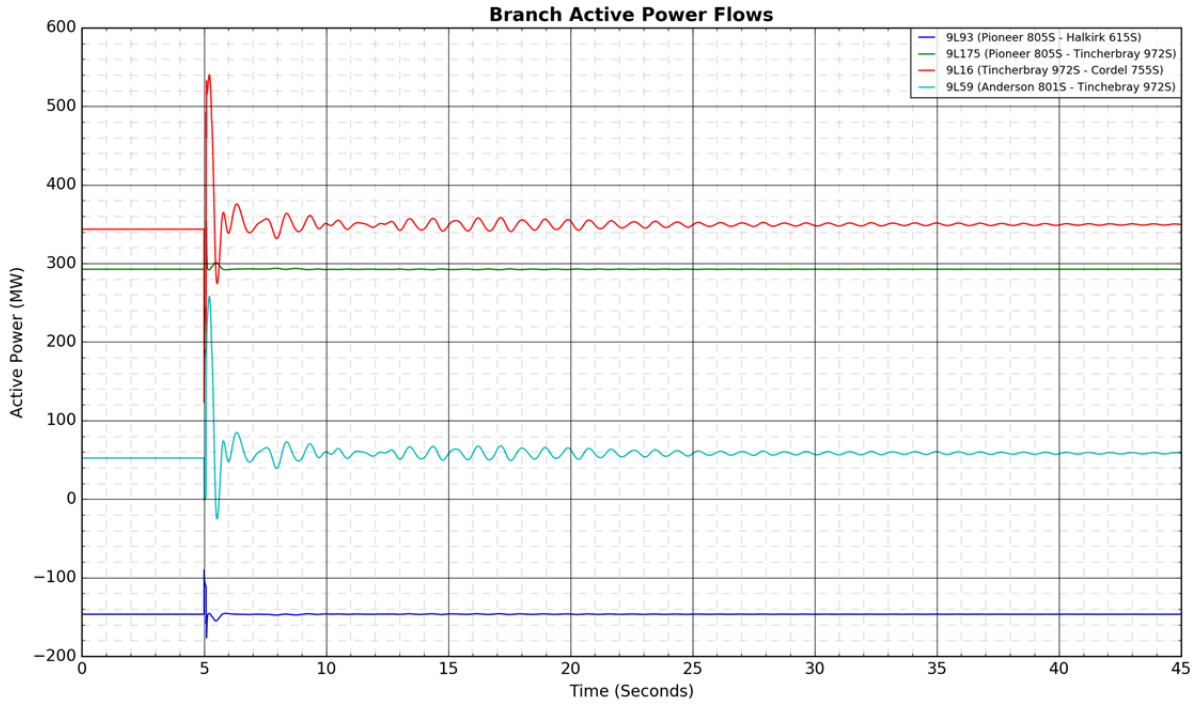
Branch Active Power Flows
9L93 (Pioneer 805S - Halkirk 615S)
9L175 (Pioneer 805S - Tincherbray 972S)
9L16 (Tincherbray 972S - Cordel 755S)
9L59 (Anderson 801S - Tinchebray 972S)
Active Power (MW)
Time (Seconds)

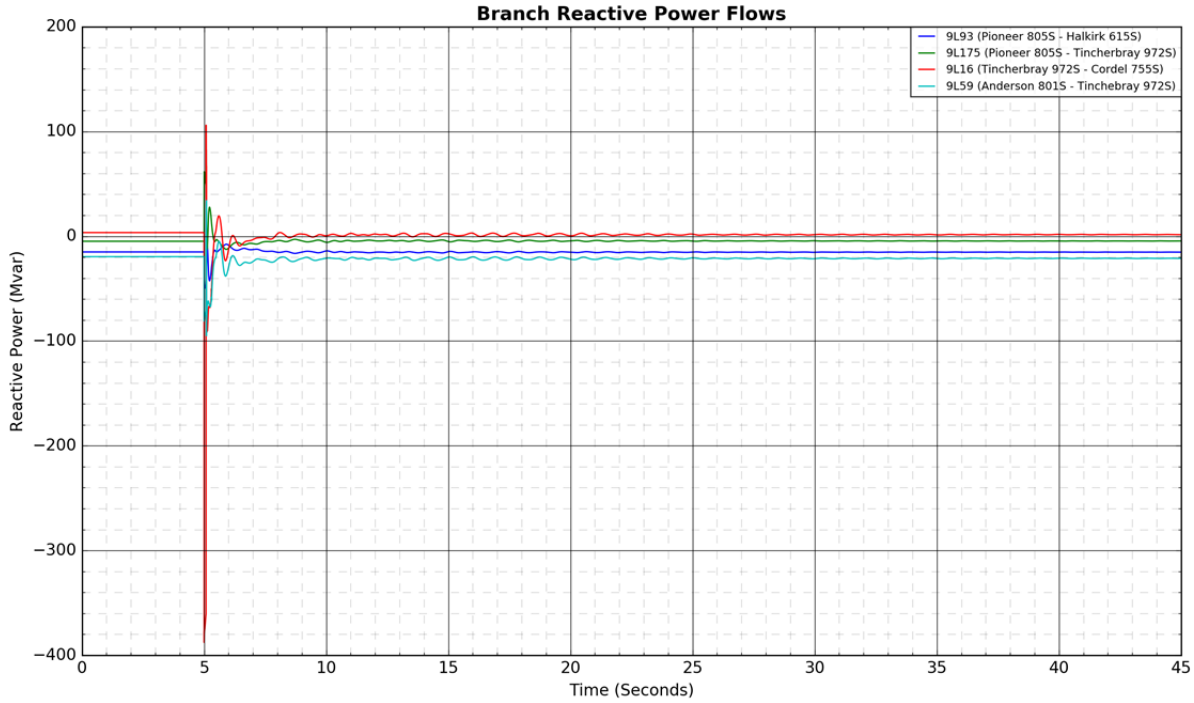
Branch Reactive Power Flows
9L93 (Pioneer 805S - Halkirk 615S)
9L175 (Pioneer 805S - Tincherbray 972S)
9L16 (Tincherbray 972S - Cordel 755S)
9L59 (Anderson 801S - Tinchebray 972S)
Reactive Power (Mvar)
Time (Seconds)

Figure A4-30: 9L24 (Oakland 946S - Lanfine 959S): 3-phase fault at Lanfine 959S

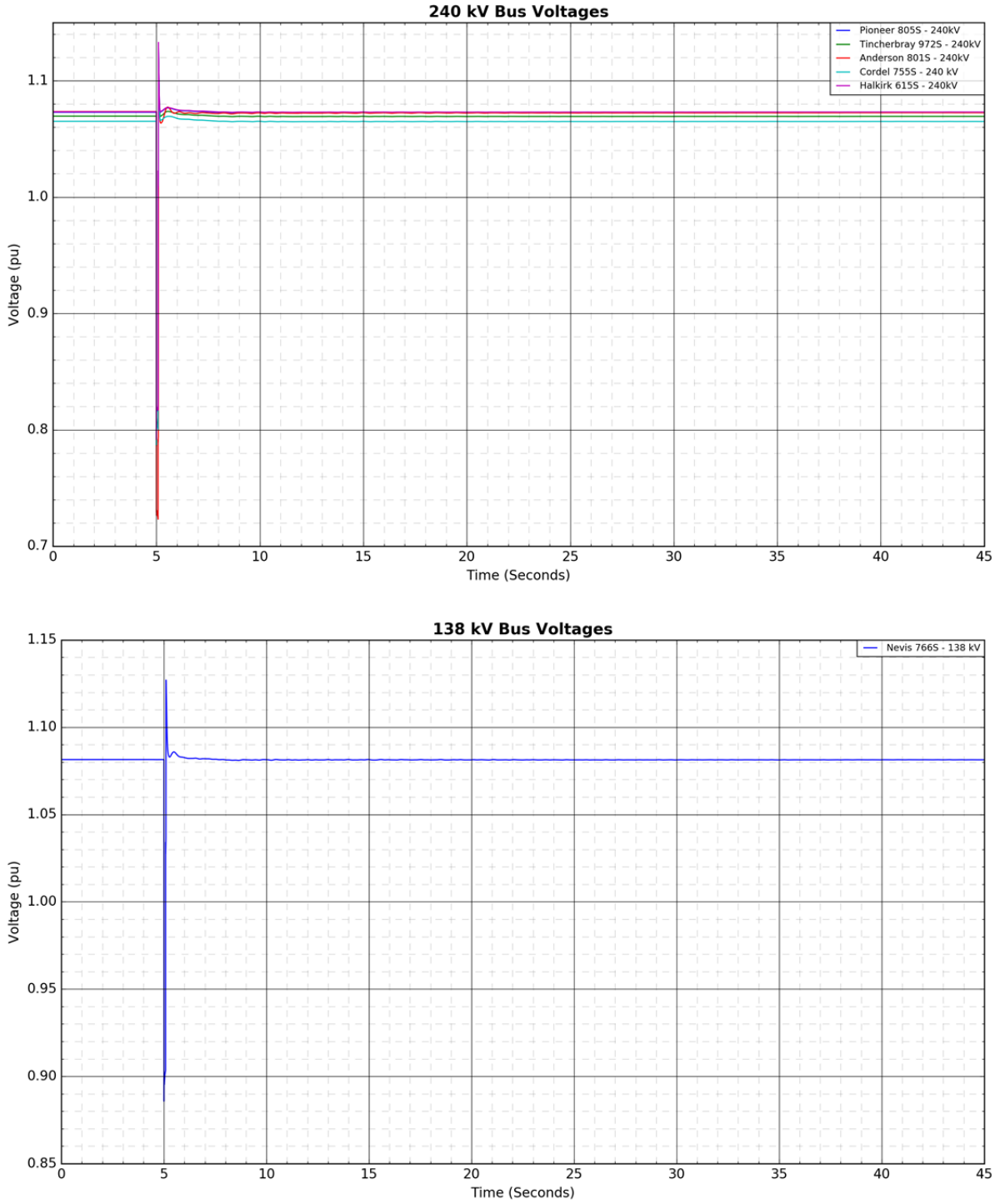

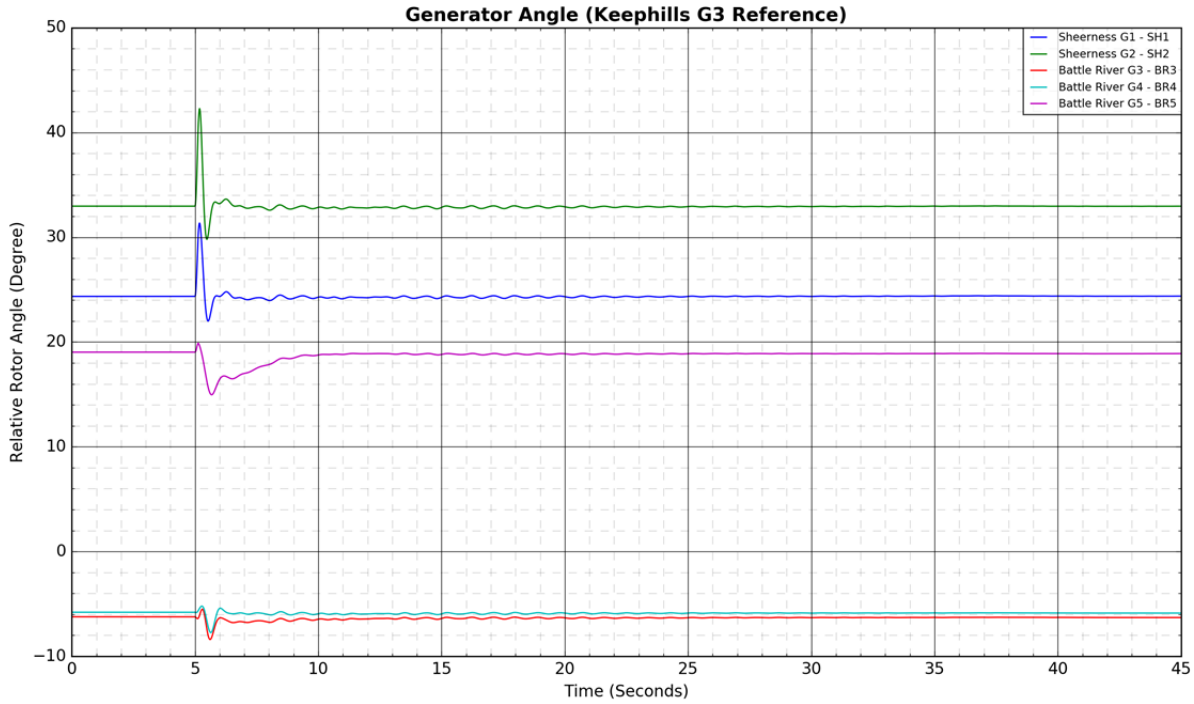
Generator Angle (Keephills G3 Reference)
Relative Rotor Angle (Degree)
Time (Seconds)
Sheerness G1 - SH1
Sheerness G2 - SH2
Battle River G3 - BR3
Battle River G4 - BR4
Battle River G5 - BR5

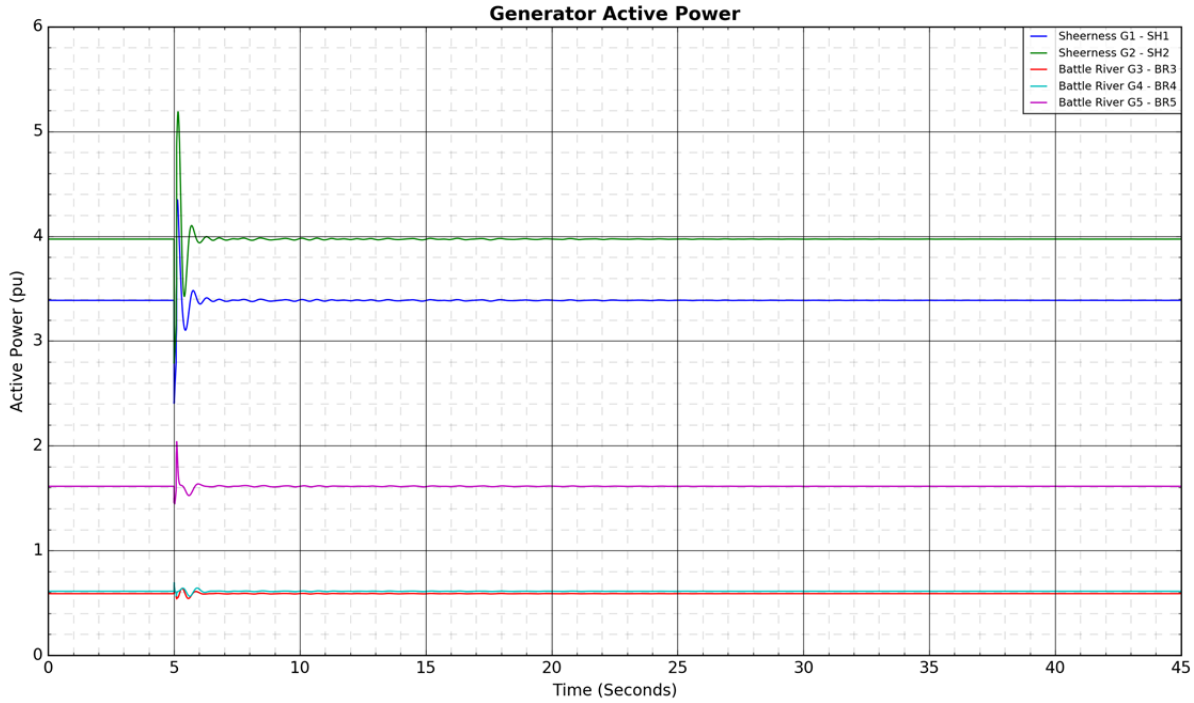
Generator Active Power
Active Power (pu)
Time (Seconds)
Sheerness G1 - SH1
Sheerness G2 - SH2
Battle River G3 - BR3
Battle River G4 - BR4
Battle River G5 - BR5

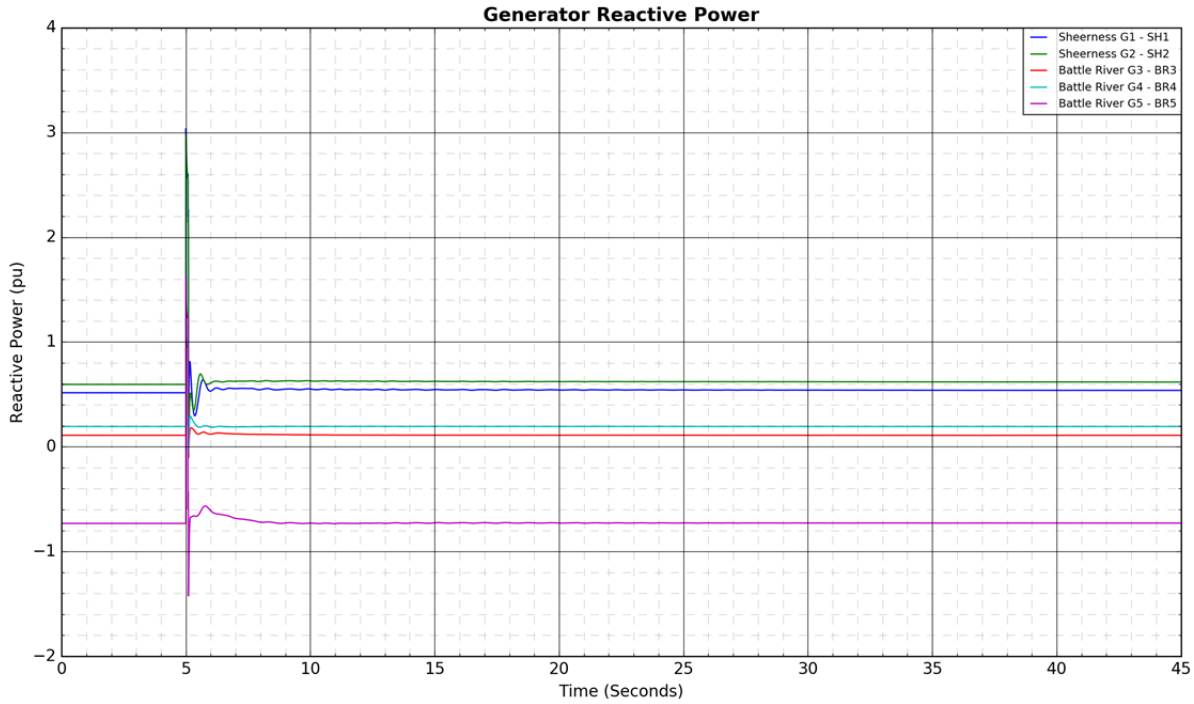
Generator Reactive Power
Sheerness G1 - SH1
Sheerness G2 - SH2
Battle River G3 - BR3
Battle River G4 - BR4
Battle River G5 - BR5
Reactive Power (pu)
Time (Seconds)

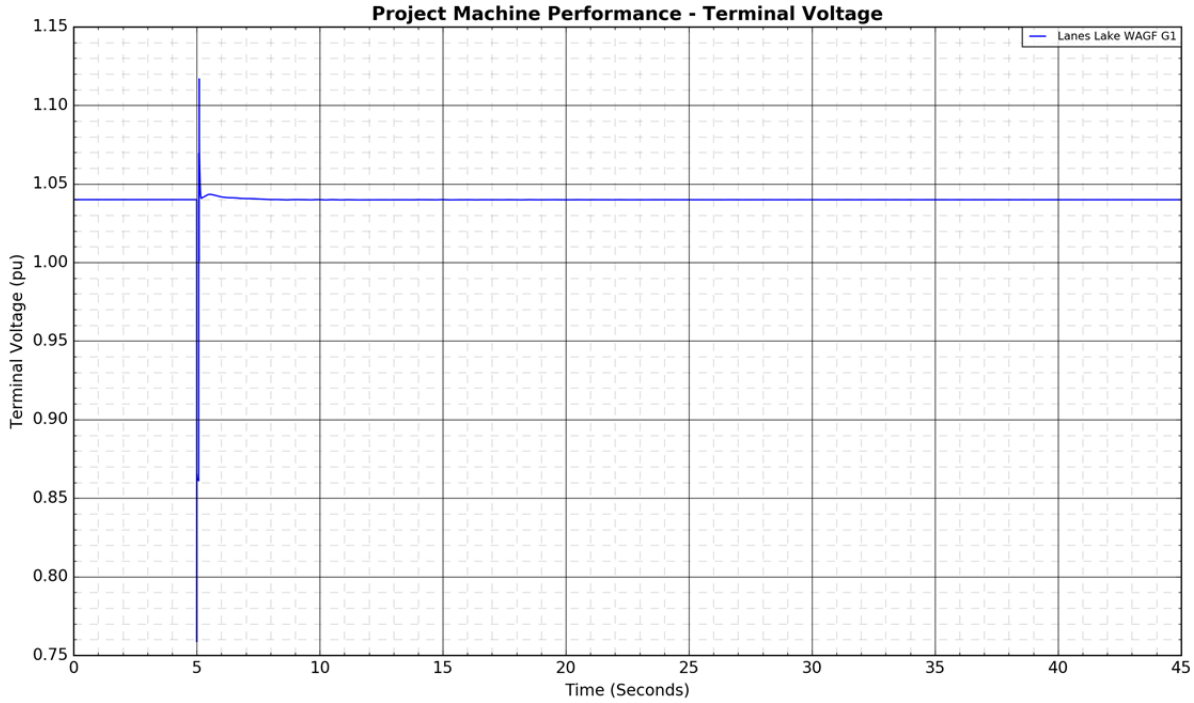
Project Machine Performance - Terminal Voltage
Lanes Lake WAGF G1
Terminal Voltage (pu)
Time (Seconds)


Project Machine Performance - Active Power
Lanes Lake WAGF G1
Active Power (pu)
Time (Seconds)
1.9
1.8
1.7
1.6
1.5
1.4
1.3
1.2
1.1
1.0
0
5
10
15
20
25
30
35
40
45

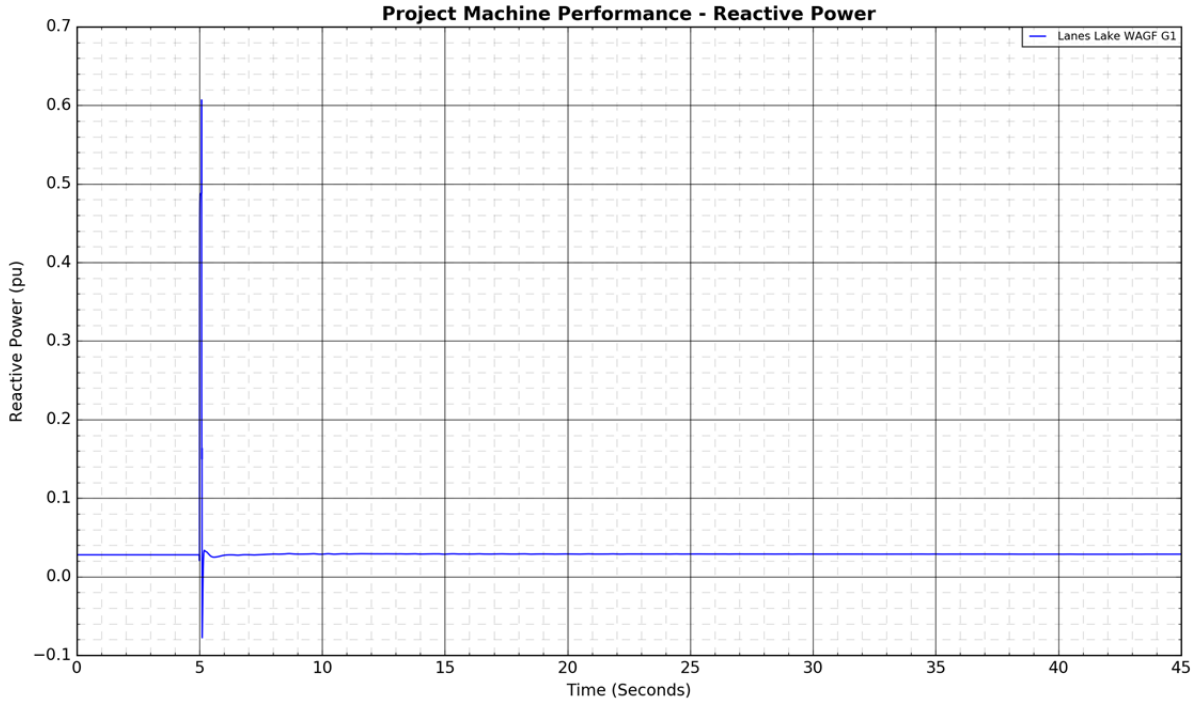
Project Machine Performance - Reactive Power
Lanes Lake WAGF G1
Reactive Power (pu)
Time (Seconds)
0.7
0.6
0.5
0.4
0.3
0.2
0.1
0.0
−0.1
0
5
10
15
20
25
30
35
40
45

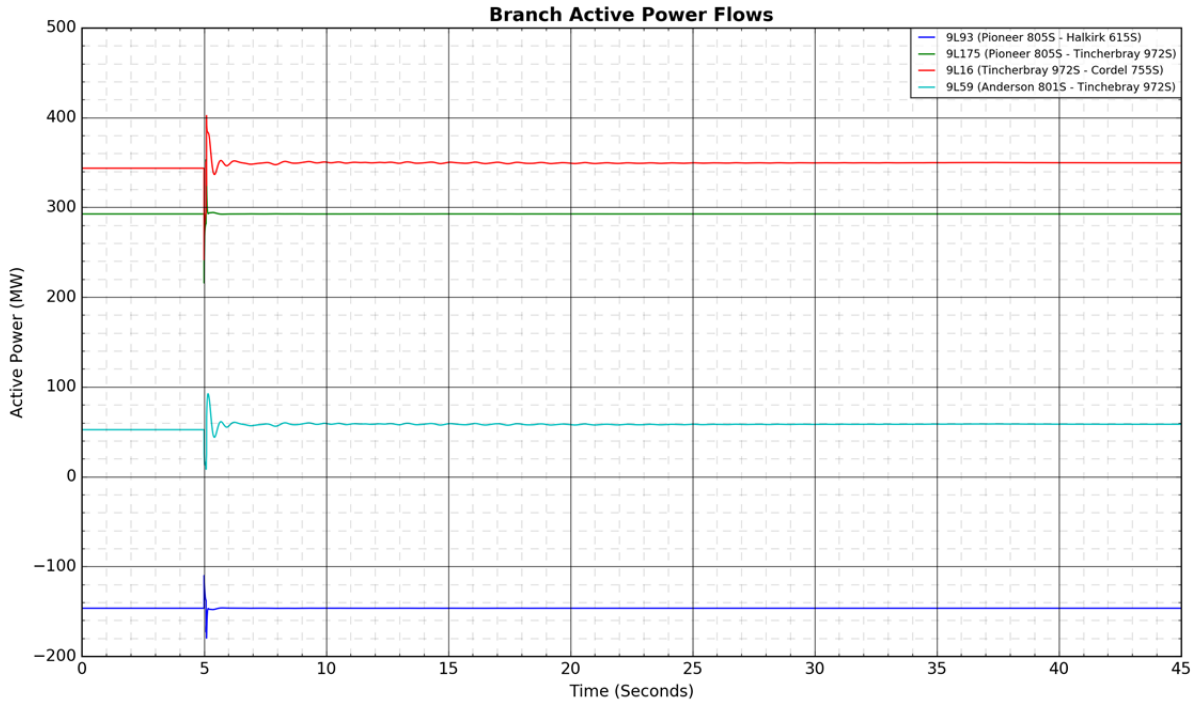
Branch Active Power Flows
9L93 (Pioneer 805S - Halkirk 615S)
9L175 (Pioneer 805S - Tincherbray 972S)
9L16 (Tincherbray 972S - Cordel 755S)
9L59 (Anderson 801S - Tinchebray 972S)
Active Power (MW)
Time (Seconds)

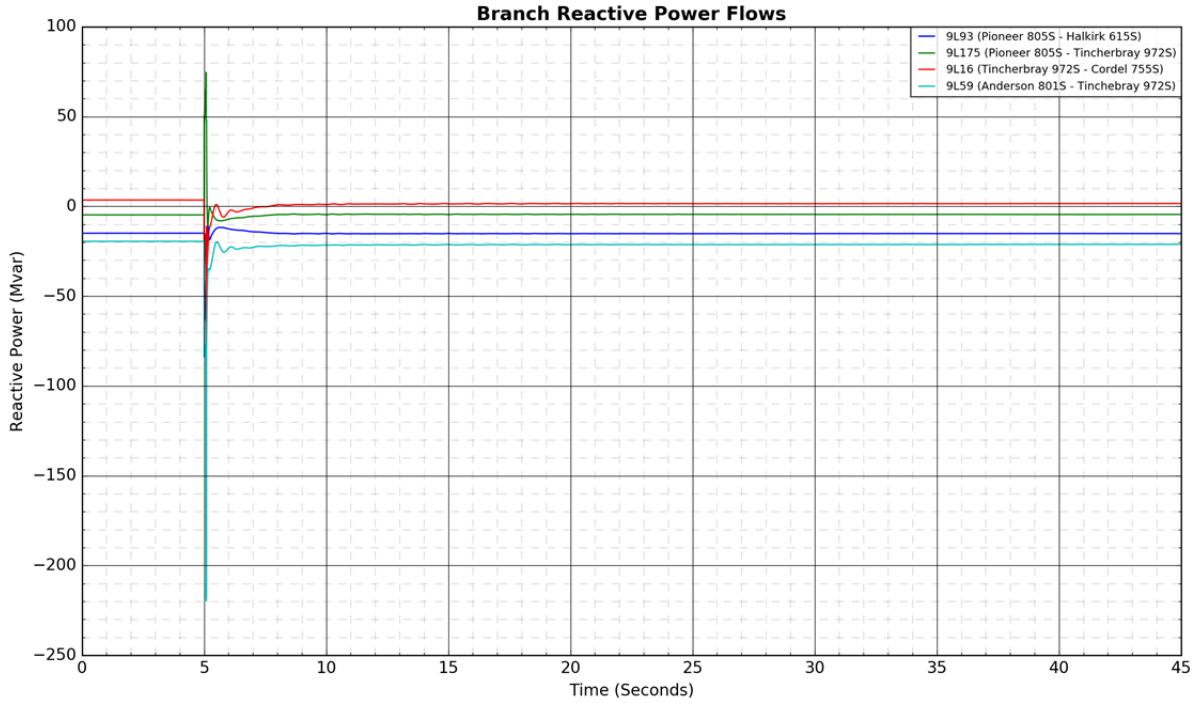
Branch Reactive Power Flows
9L93 (Pioneer 805S - Halkirk 615S)
9L175 (Pioneer 805S - Tincherbray 972S)
9L16 (Tincherbray 972S - Cordel 755S)
9L59 (Anderson 801S - Tinchebray 972S)
Reactive Power (Mvar)
Time (Seconds)

Figure A4-31: 9L29 (Oakland 946S - Coyote Lake 963S): 3-phase fault at Oakland 946S



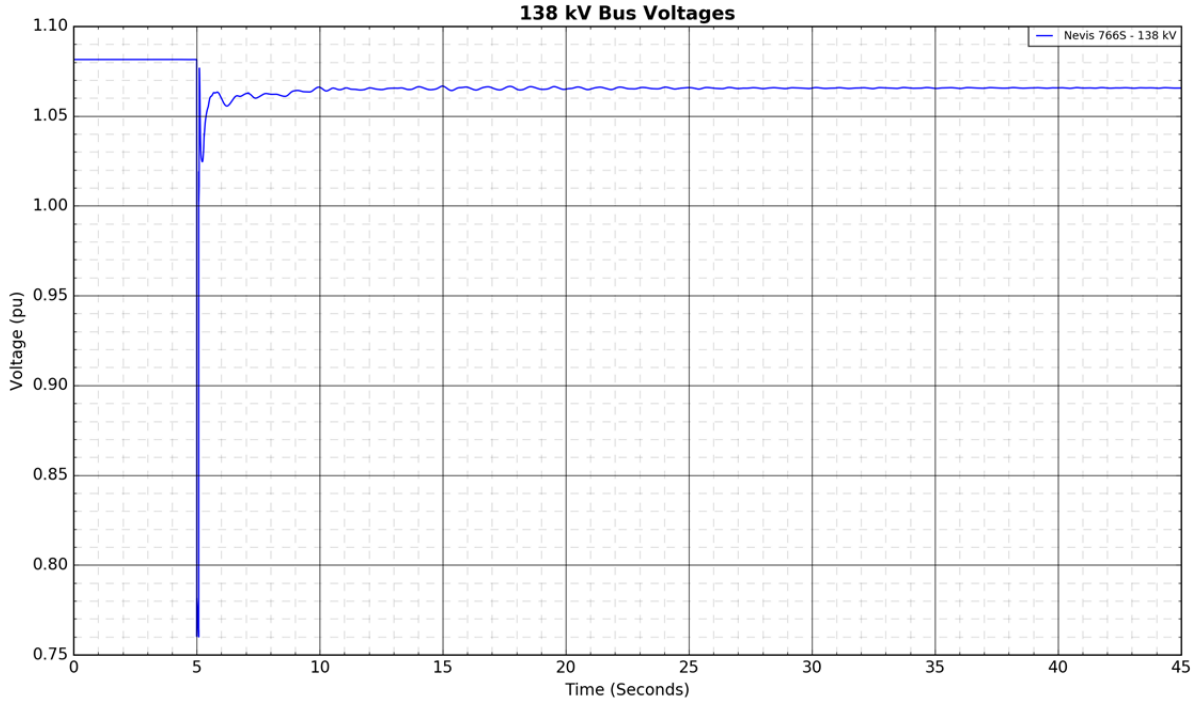

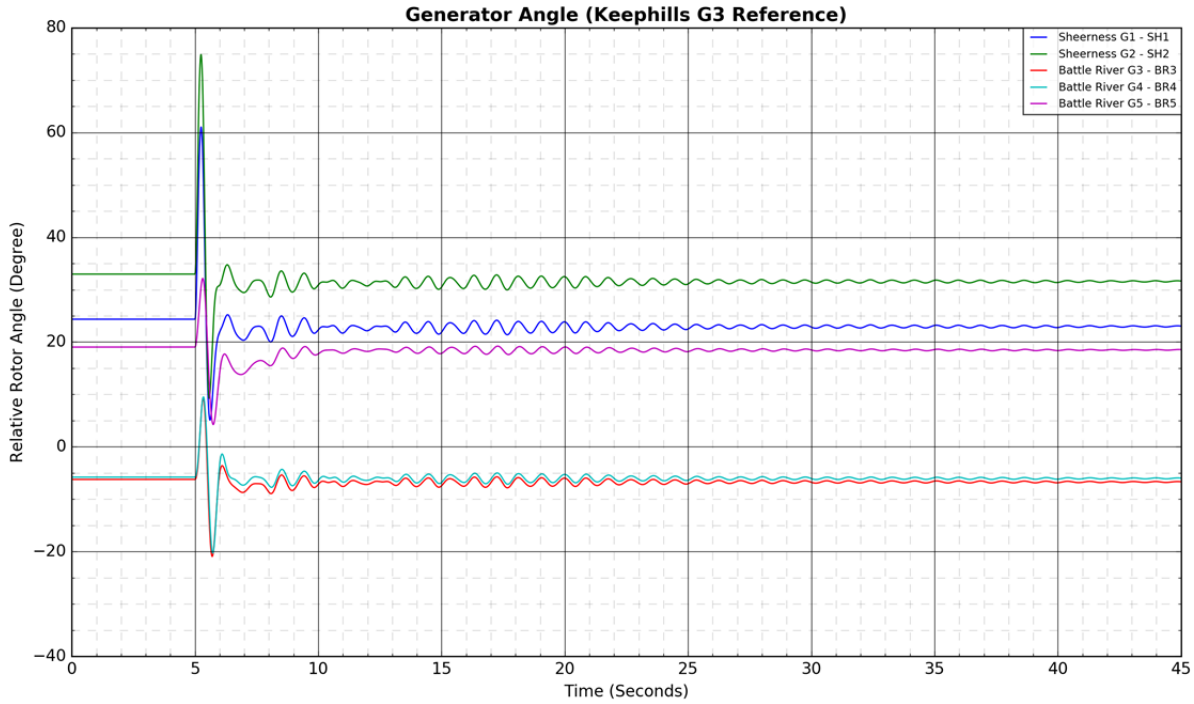
Generator Angle (Keephills G3 Reference)
Relative Rotor Angle (Degree)
Time (Seconds)
Sheerness G1 - SH1
Sheerness G2 - SH2
Battle River G3 - BR3
Battle River G4 - BR4
Battle River G5 - BR5

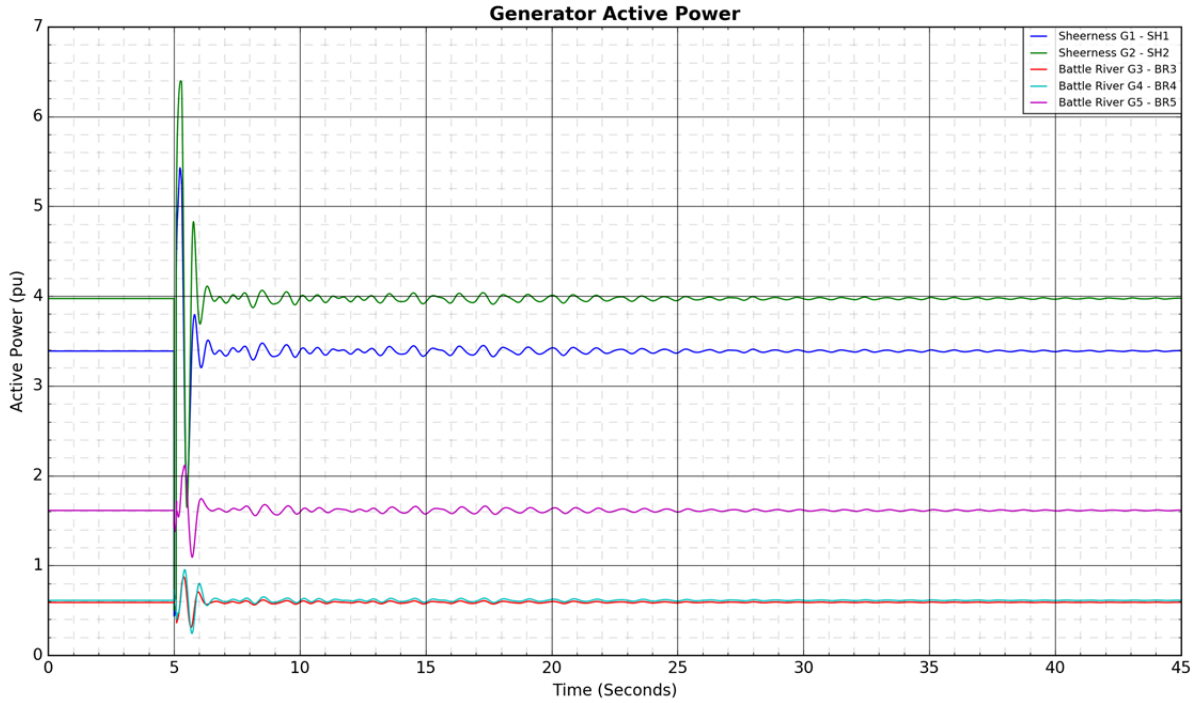
Generator Active Power
Active Power (pu)
Time (Seconds)
Sheerness G1 - SH1
Sheerness G2 - SH2
Battle River G3 - BR3
Battle River G4 - BR4
Battle River G5 - BR5

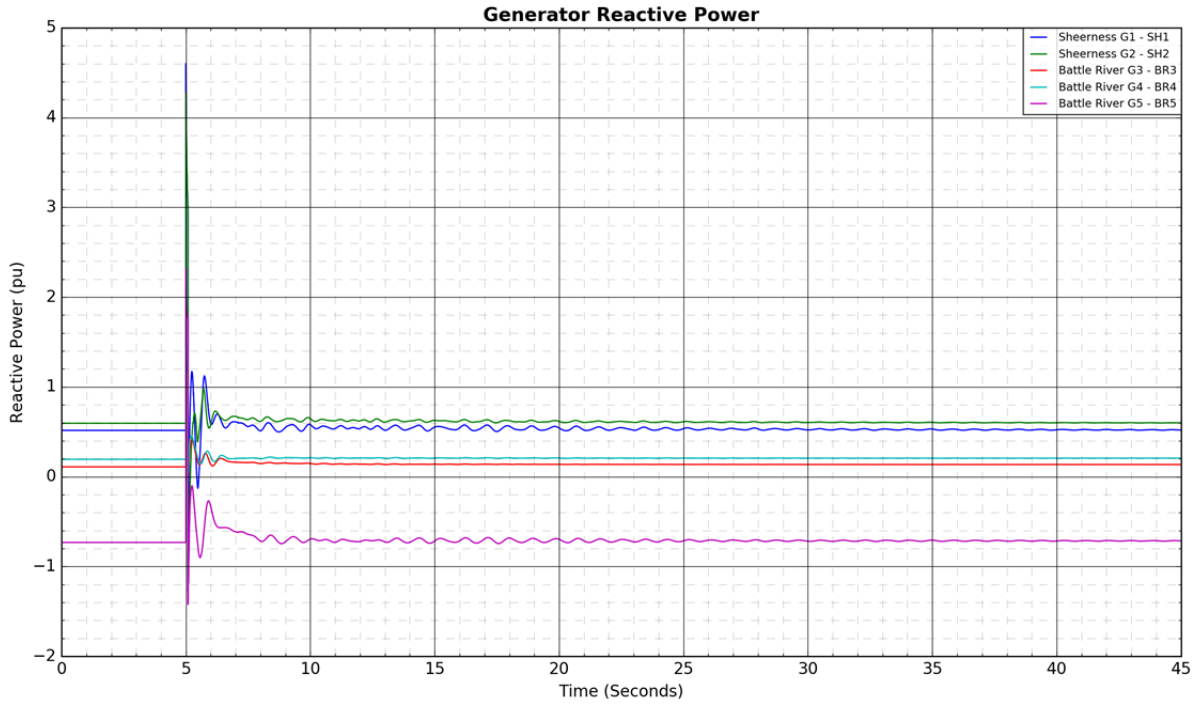
Generator Reactive Power
Sheerness G1 - SH1
Sheerness G2 - SH2
Battle River G3 - BR3
Battle River G4 - BR4
Battle River G5 - BR5
Reactive Power (pu)
Time (Seconds)

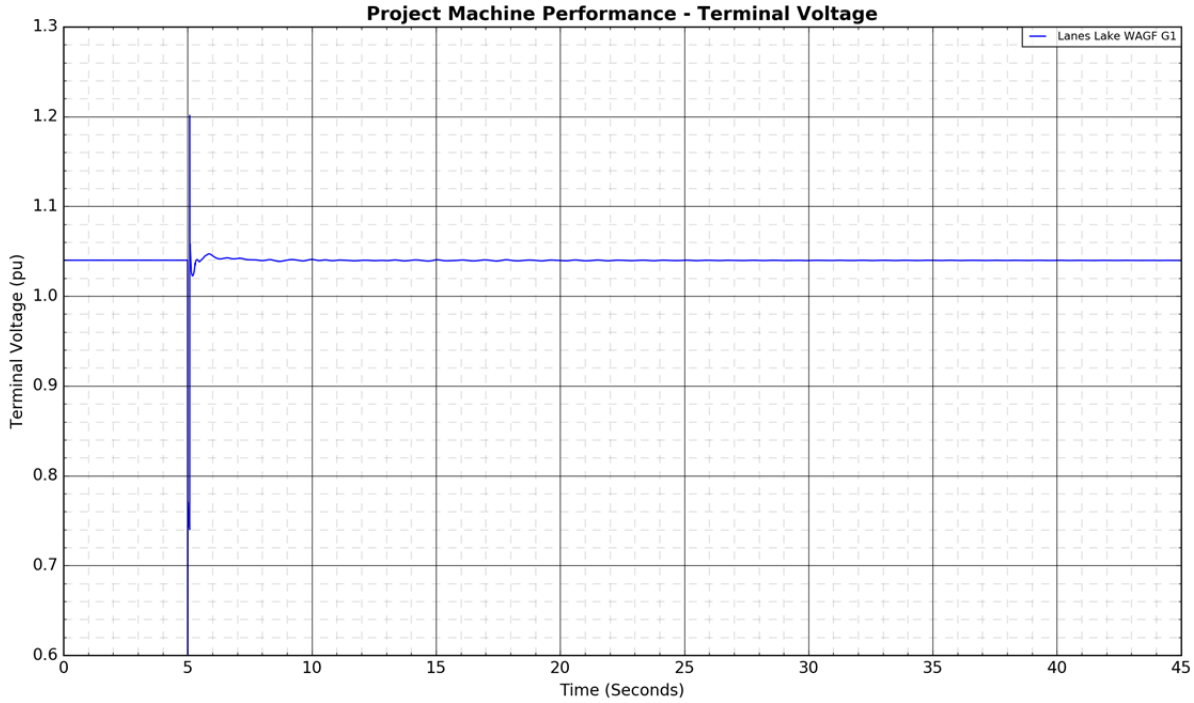
Project Machine Performance - Terminal Voltage
Lanes Lake WAGF G1
Terminal Voltage (pu)
Time (Seconds)


Project Machine Performance - Active Power
Lanes Lake WAGF G1
Active Power (pu)
Time (Seconds)
2.4
2.2
2.0
1.8
1.6
1.4
1.2
1.0
0.8
0
5
10
15
20
25
30
35
40
45

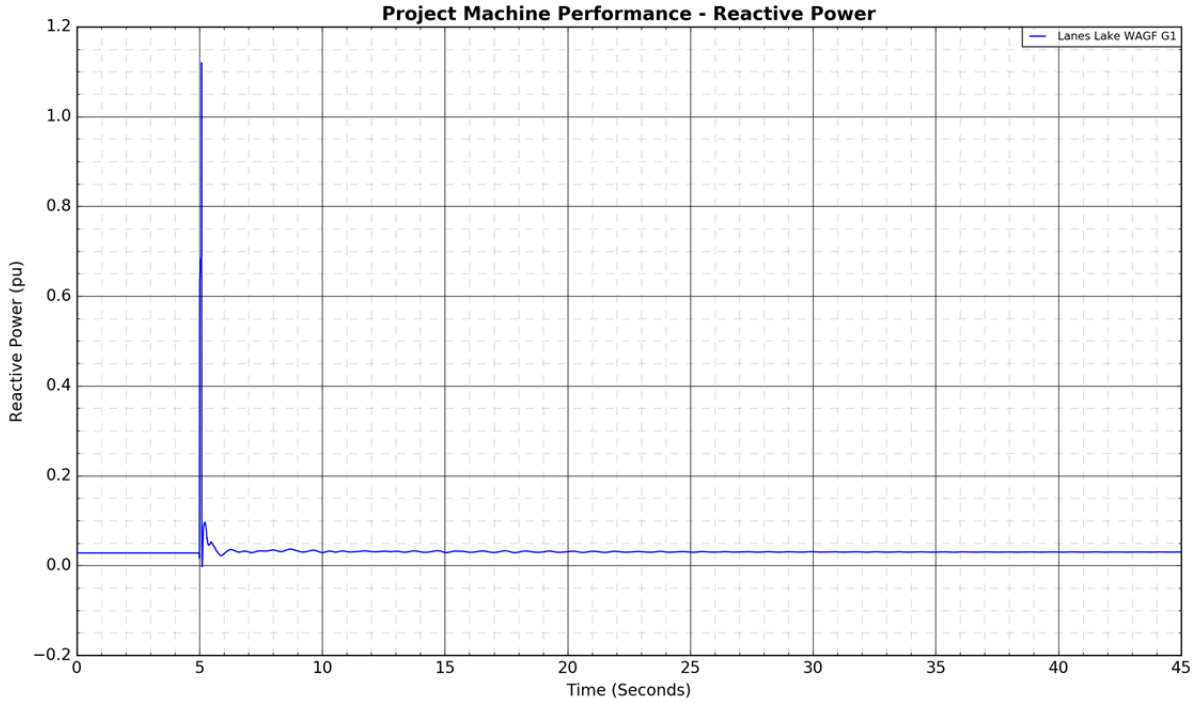
Project Machine Performance - Reactive Power
Lanes Lake WAGF G1
Reactive Power (pu)
Time (Seconds)
1.2
1.0
0.8
0.6
0.4
0.2
0.0
−0.2
0
5
10
15
20
25
30
35
40
45

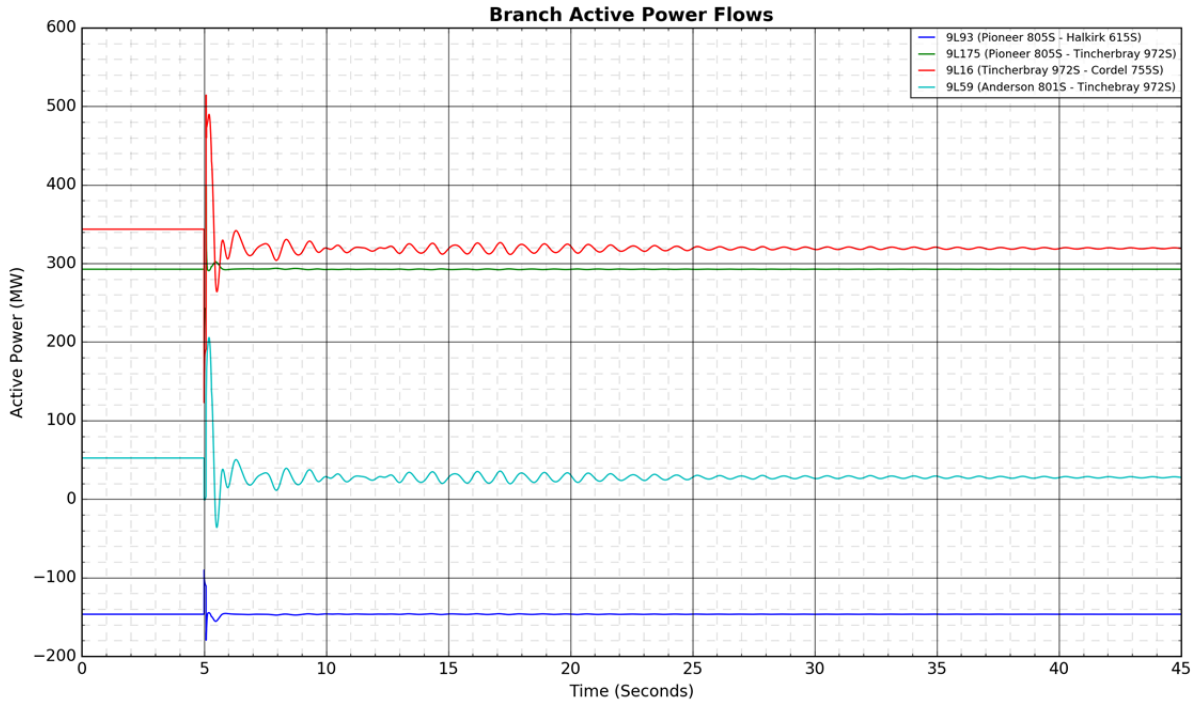
Branch Active Power Flows
9L93 (Pioneer 805S - Halkirk 615S)
9L175 (Pioneer 805S - Tincherbray 972S)
9L16 (Tincherbray 972S - Cordel 755S)
9L59 (Anderson 801S - Tinchebray 972S)
Active Power (MW)
Time (Seconds)

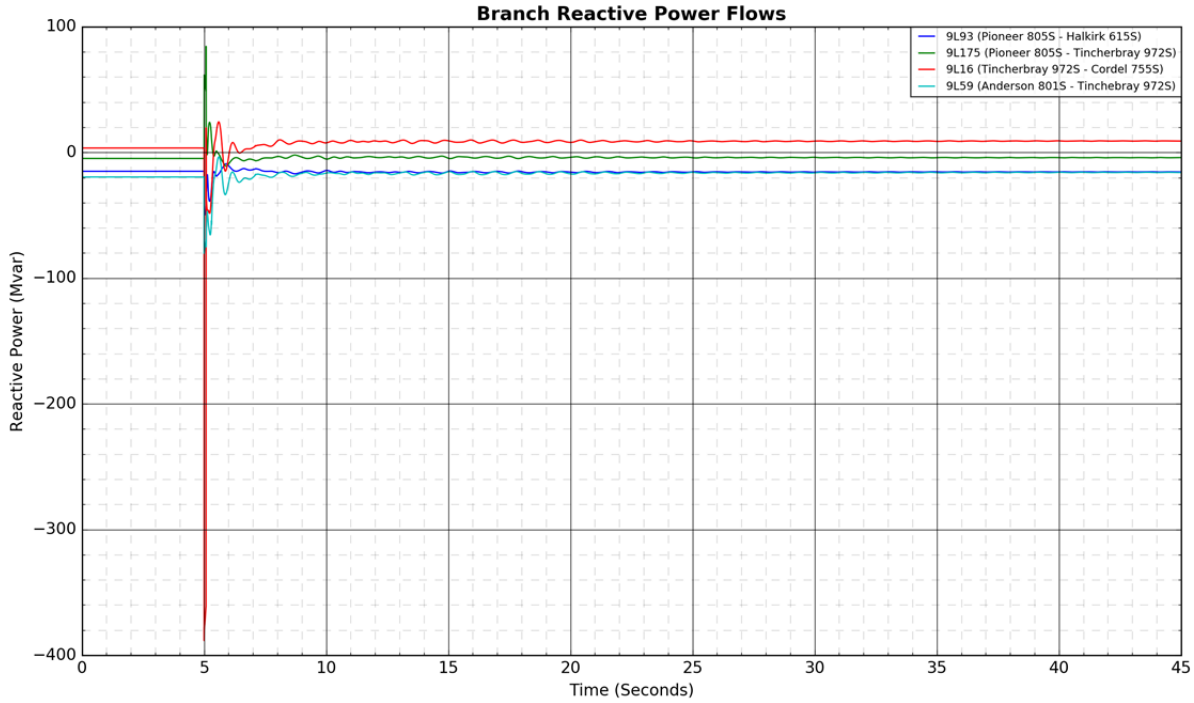
Branch Reactive Power Flows
9L93 (Pioneer 805S - Halkirk 615S)
9L175 (Pioneer 805S - Tincherbray 972S)
9L16 (Tincherbray 972S - Cordel 755S)
9L59 (Anderson 801S - Tinchebray 972S)
Reactive Power (Mvar)
Time (Seconds)

Figure A4-32: 9L29 (Oakland 946S - Coyote Lake 963S): 3-phase fault at Coyote Lake 963S

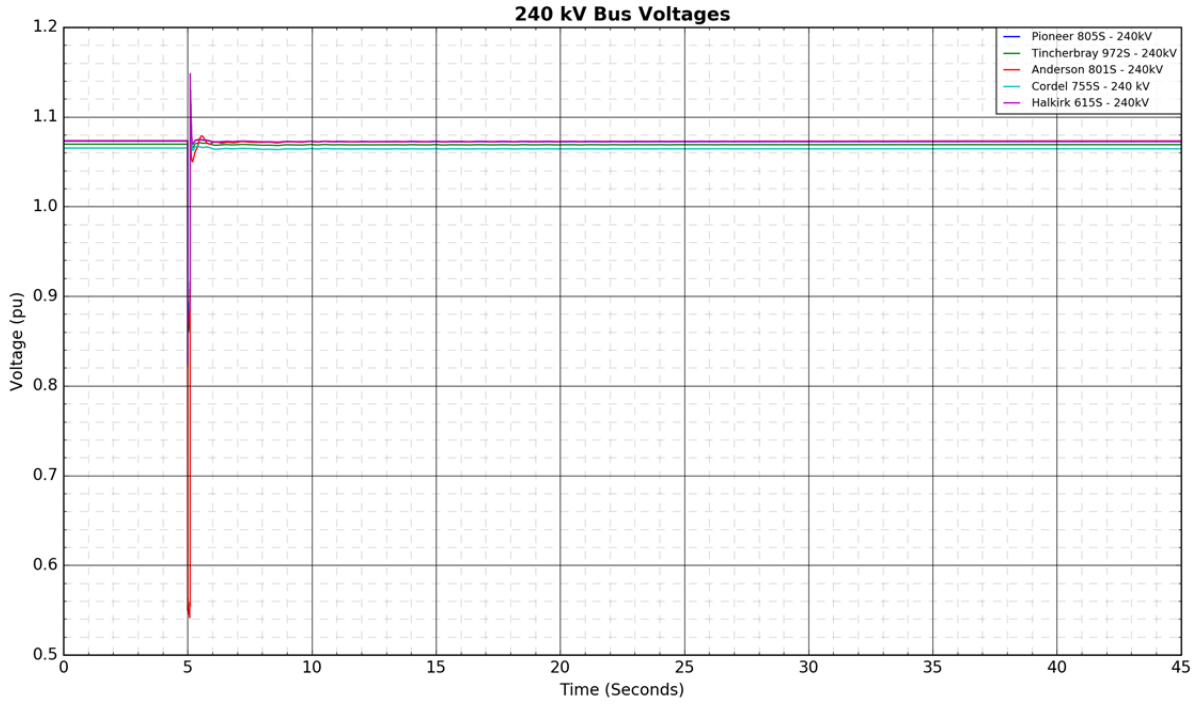

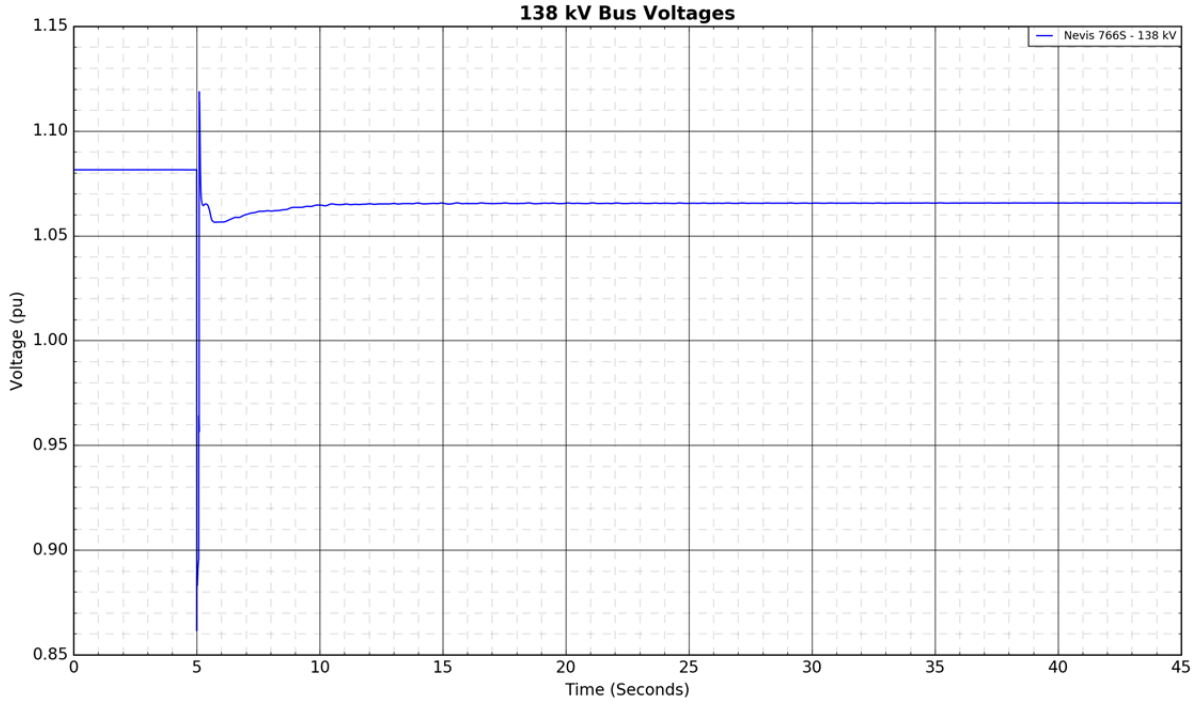

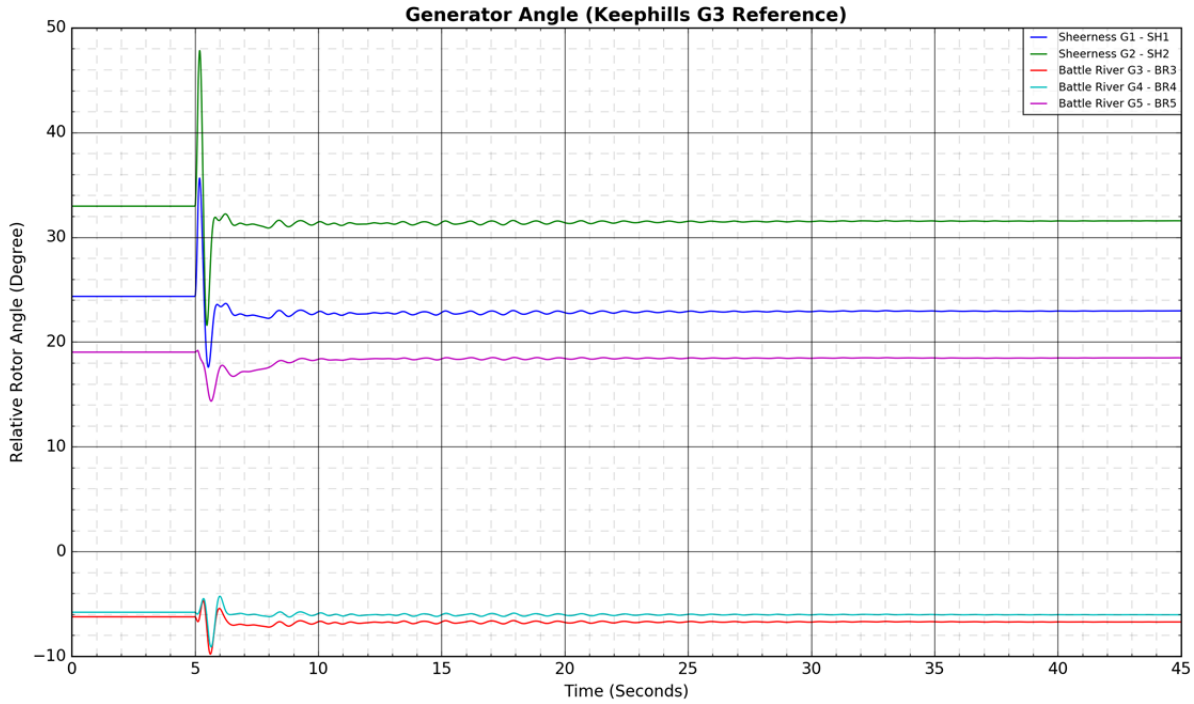
Generator Angle (Keephills G3 Reference)
Relative Rotor Angle (Degree)
Time (Seconds)
Sheerness G1 - SH1
Sheerness G2 - SH2
Battle River G3 - BR3
Battle River G4 - BR4
Battle River G5 - BR5

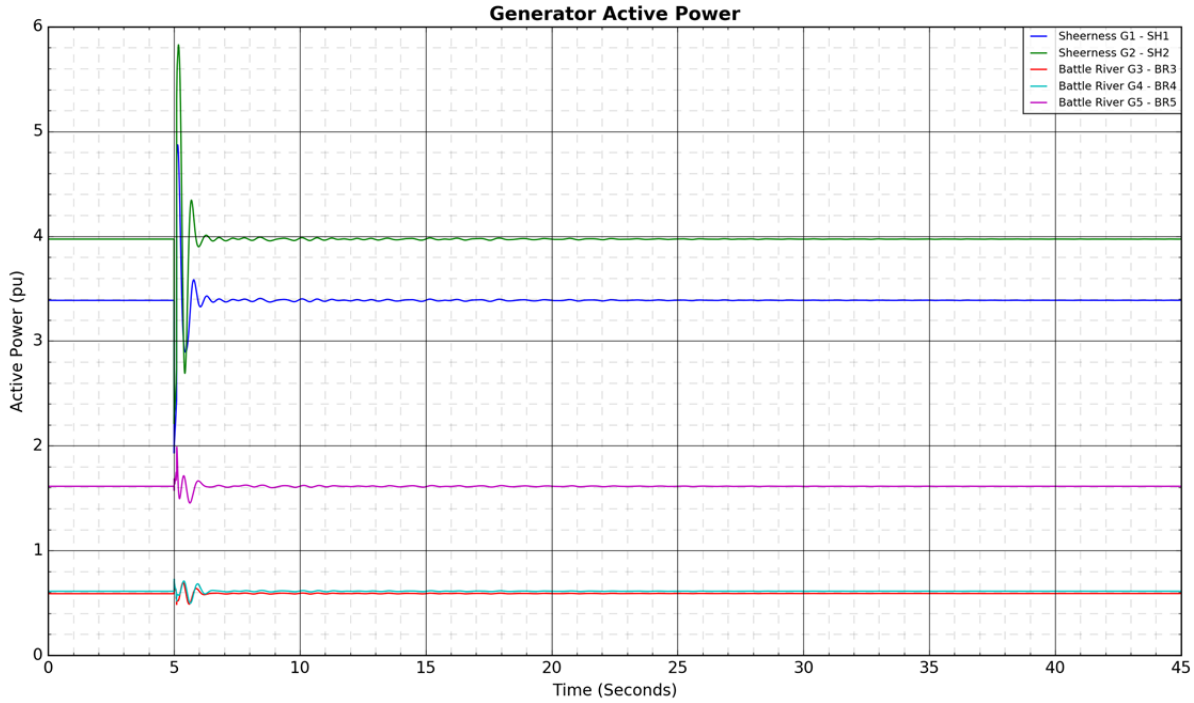
Generator Active Power
Active Power (pu)
Time (Seconds)
Sheerness G1 - SH1
Sheerness G2 - SH2
Battle River G3 - BR3
Battle River G4 - BR4
Battle River G5 - BR5

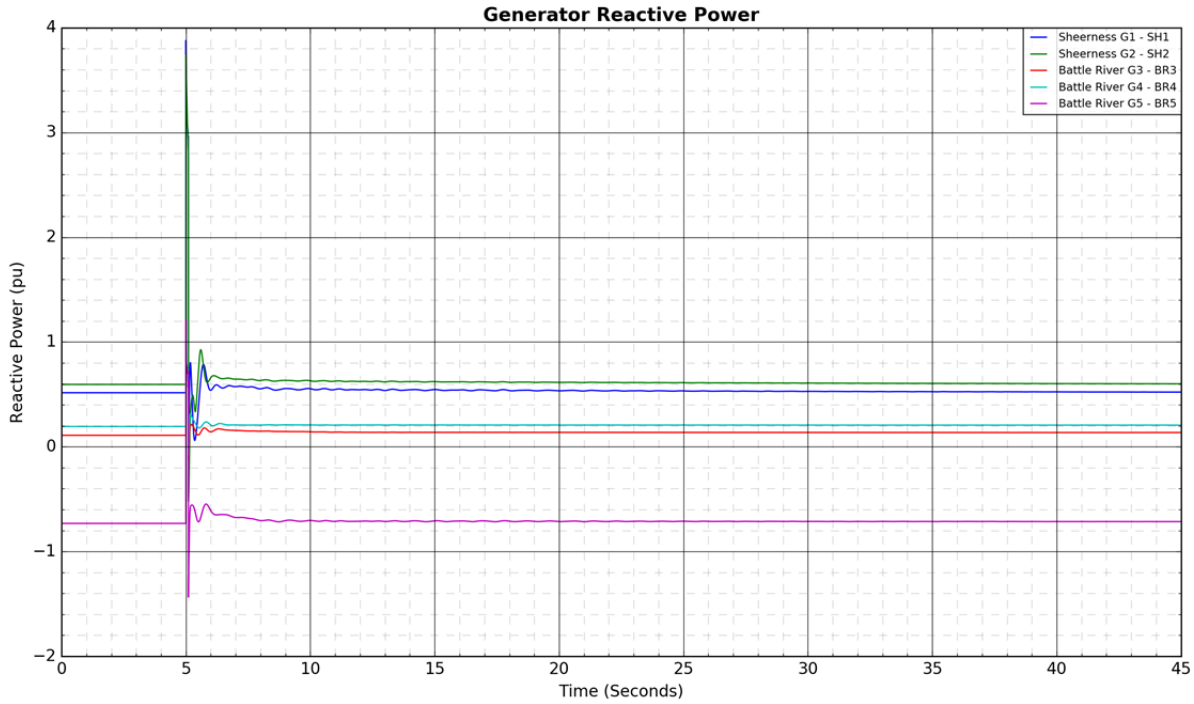
Generator Reactive Power
Sheerness G1 - SH1
Sheerness G2 - SH2
Battle River G3 - BR3
Battle River G4 - BR4
Battle River G5 - BR5
Reactive Power (pu)
Time (Seconds)

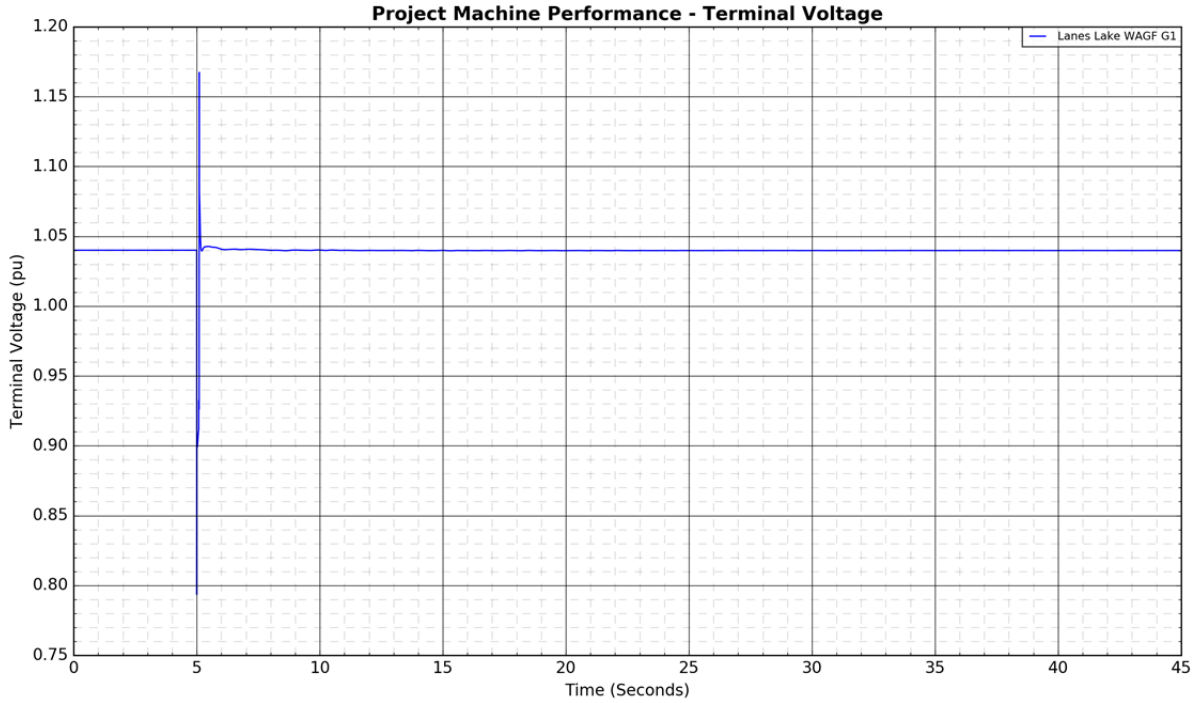
Project Machine Performance - Terminal Voltage
Lanes Lake WAGF G1
Terminal Voltage (pu)
Time (Seconds)


Project Machine Performance - Active Power
Lanes Lake WAGF G1
Active Power (pu)
Time (Seconds)
1.9
1.8
1.7
1.6
1.5
1.4
1.3
1.2
1.1
0
5
10
15
20
25
30
35
40
45

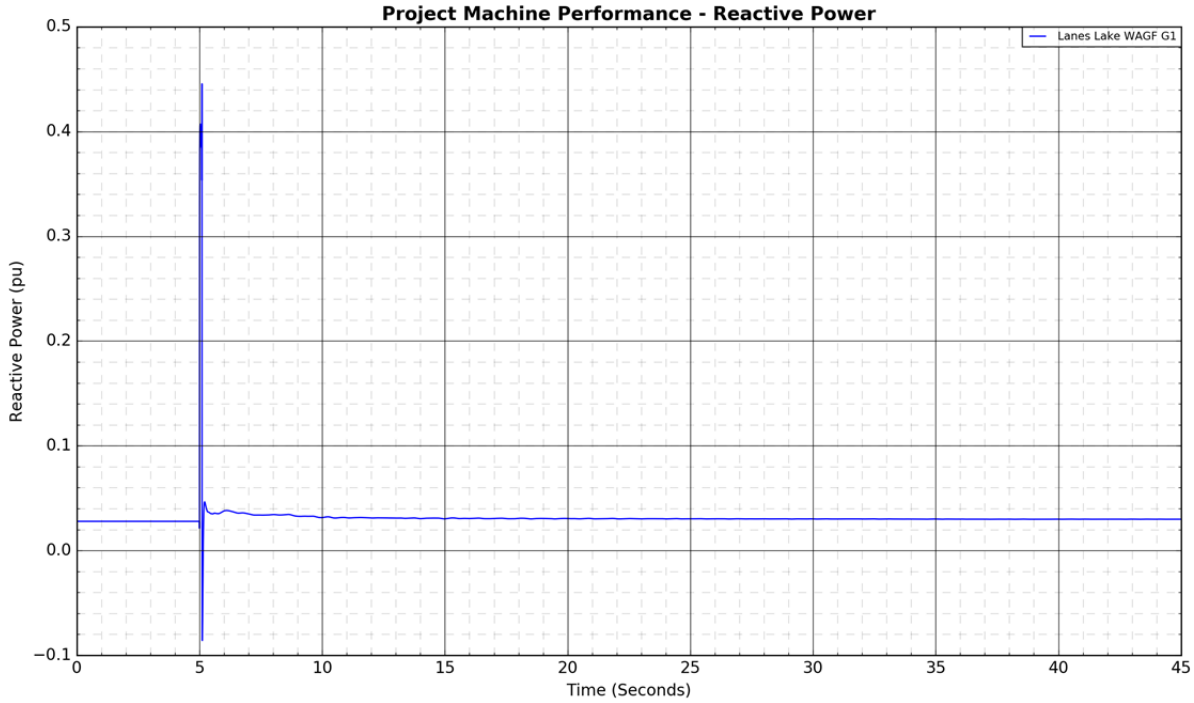
Project Machine Performance - Reactive Power
Lanes Lake WAGF G1
Reactive Power (pu)
Time (Seconds)
0.5
0.4
0.3
0.2
0.1
0.0
−0.1
0
5
10
15
20
25
30
35
40
45

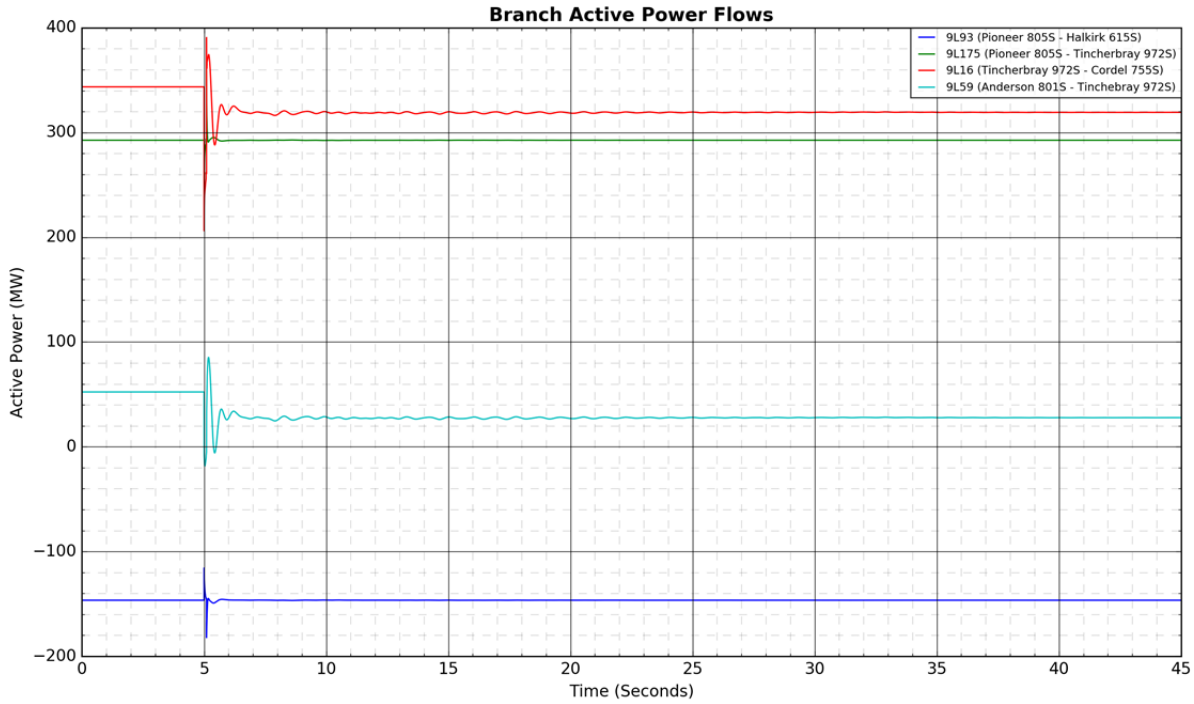
Branch Active Power Flows
9L93 (Pioneer 805S - Halkirk 615S)
9L175 (Pioneer 805S - Tincherbray 972S)
9L16 (Tincherbray 972S - Cordel 755S)
9L59 (Anderson 801S - Tinchebray 972S)
Active Power (MW)
Time (Seconds)

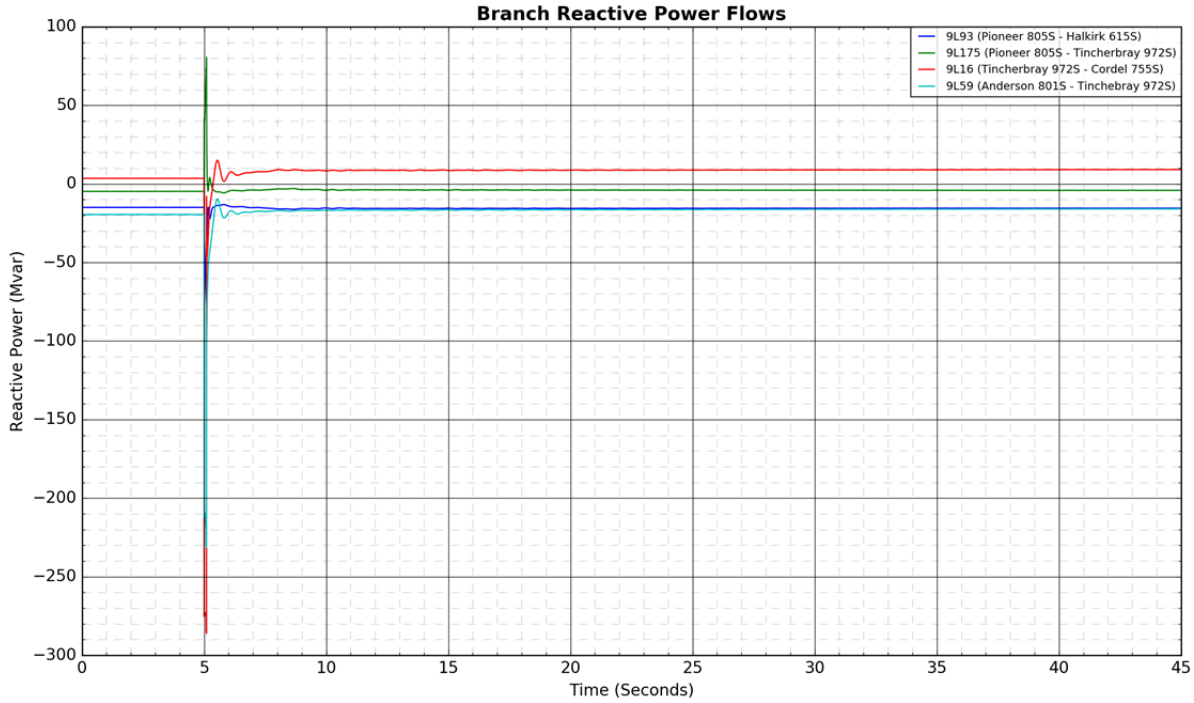
Branch Reactive Power Flows
9L93 (Pioneer 805S - Halkirk 615S)
9L175 (Pioneer 805S - Tincherbray 972S)
9L16 (Tincherbray 972S - Cordel 755S)
9L59 (Anderson 801S - Tinchebray 972S)
Reactive Power (Mvar)
Time (Seconds)

Figure A4-33: 9L20 (Cordel 755S - Nevis 766S): 3-phase fault at Cordel 755S

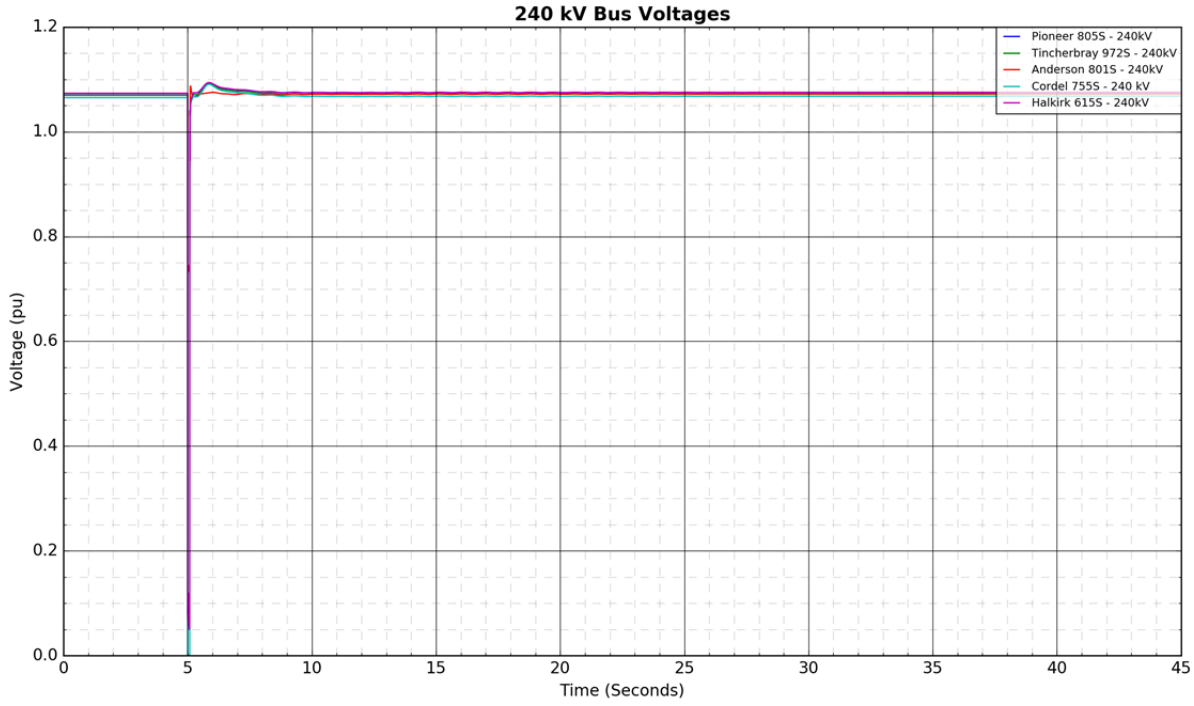

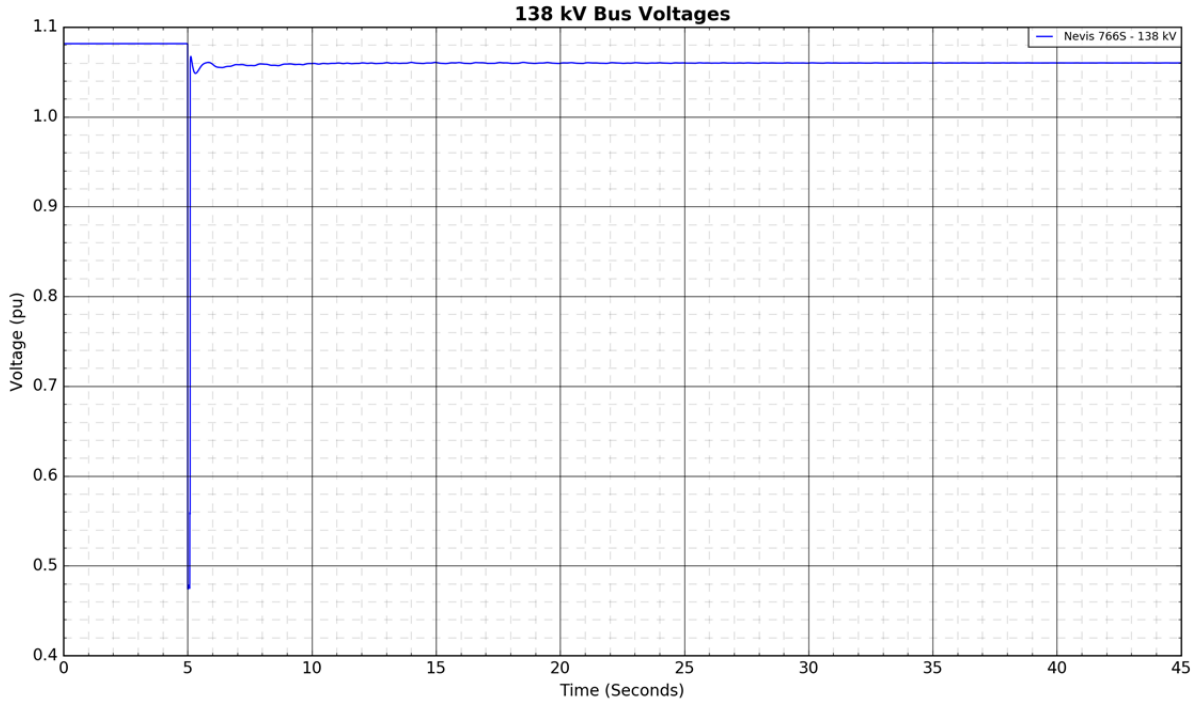

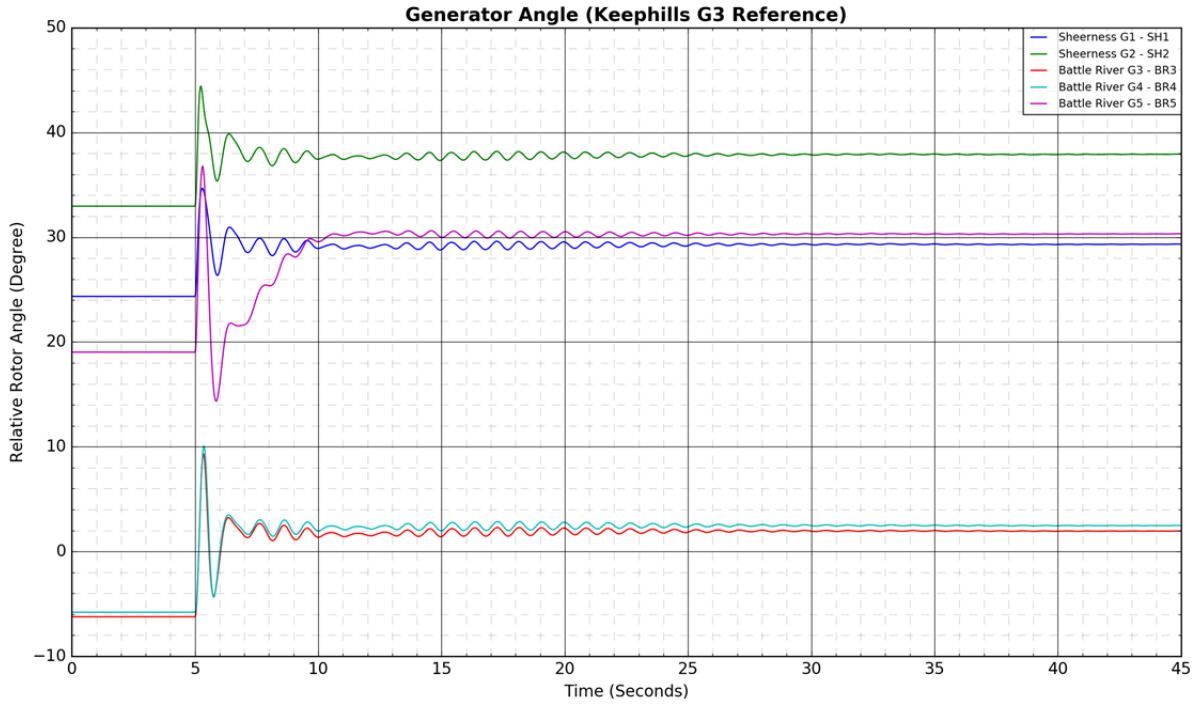
Generator Angle (Keephills G3 Reference)
Relative Rotor Angle (Degree)
Time (Seconds)
Sheerness G1 - SH1
Sheerness G2 - SH2
Battle River G3 - BR3
Battle River G4 - BR4
Battle River G5 - BR5

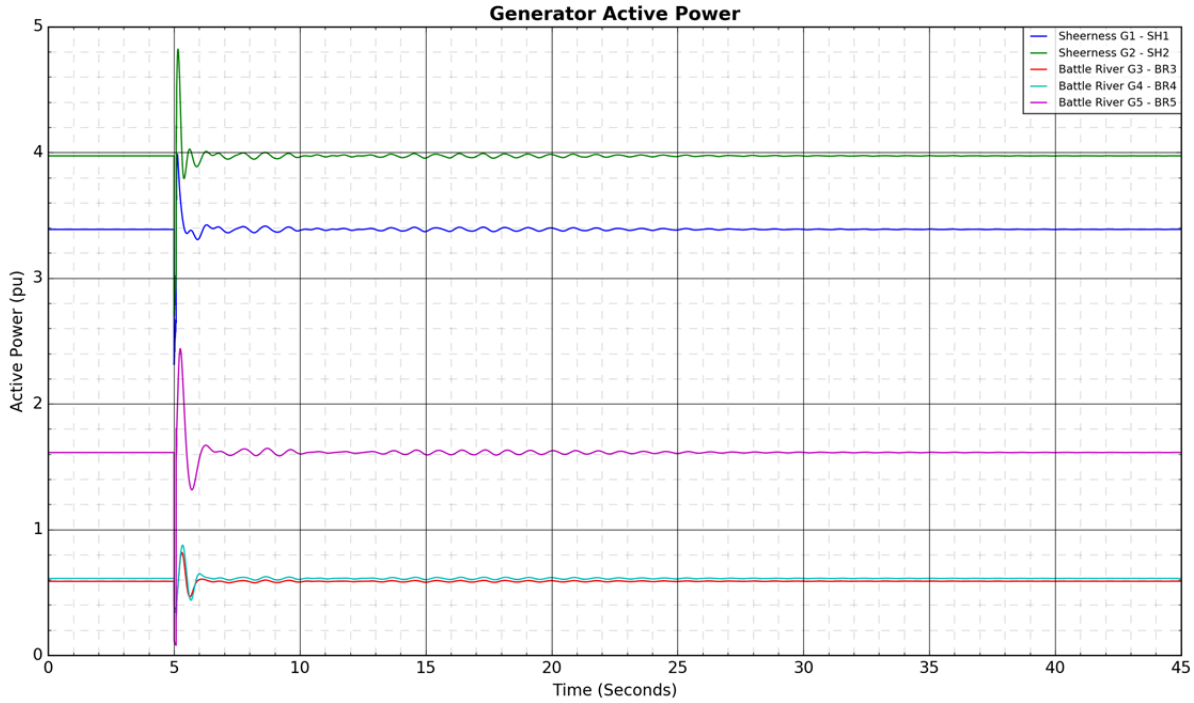
Generator Active Power
Active Power (pu)
Time (Seconds)
Sheerness G1 - SH1
Sheerness G2 - SH2
Battle River G3 - BR3
Battle River G4 - BR4
Battle River G5 - BR5

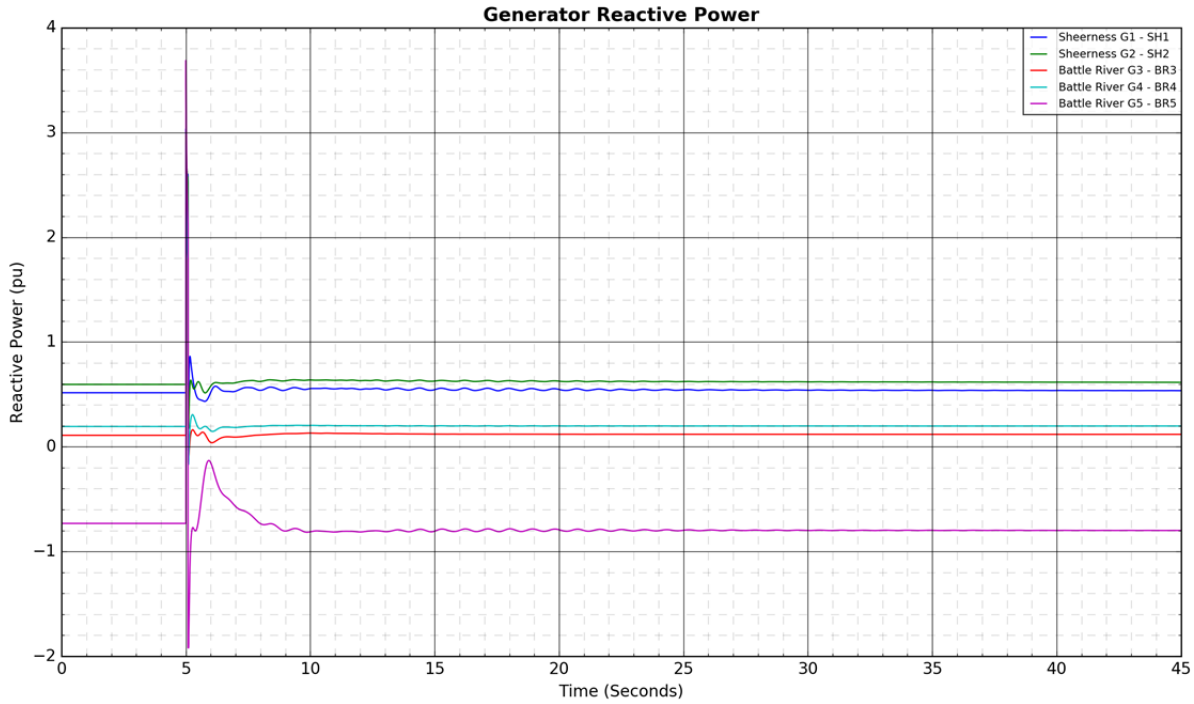
Generator Reactive Power
Sheerness G1 - SH1
Sheerness G2 - SH2
Battle River G3 - BR3
Battle River G4 - BR4
Battle River G5 - BR5
Reactive Power (pu)
Time (Seconds)

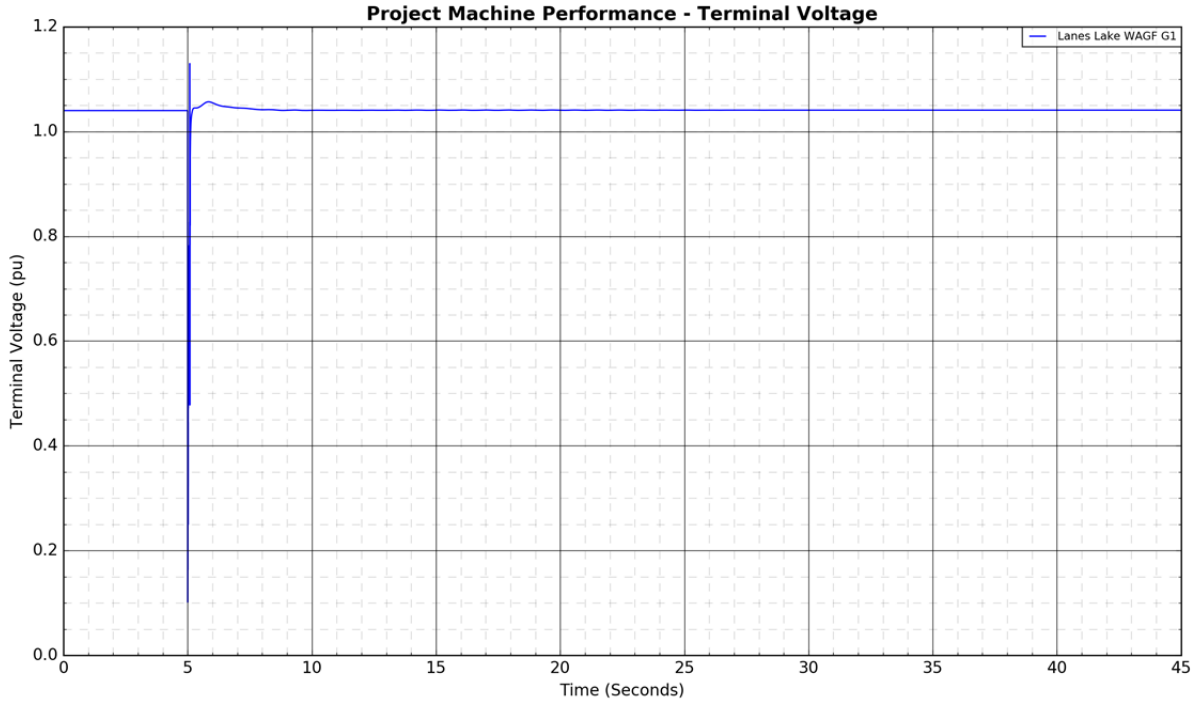
Project Machine Performance - Terminal Voltage
Lanes Lake WAGF G1
Terminal Voltage (pu)
Time (Seconds)


Project Machine Performance - Active Power
Lanes Lake WAGF G1
Active Power (pu)
Time (Seconds)
2.5
2.0
1.5
1.0
0.5
0.0
0
5
10
15
20
25
30
35
40
45

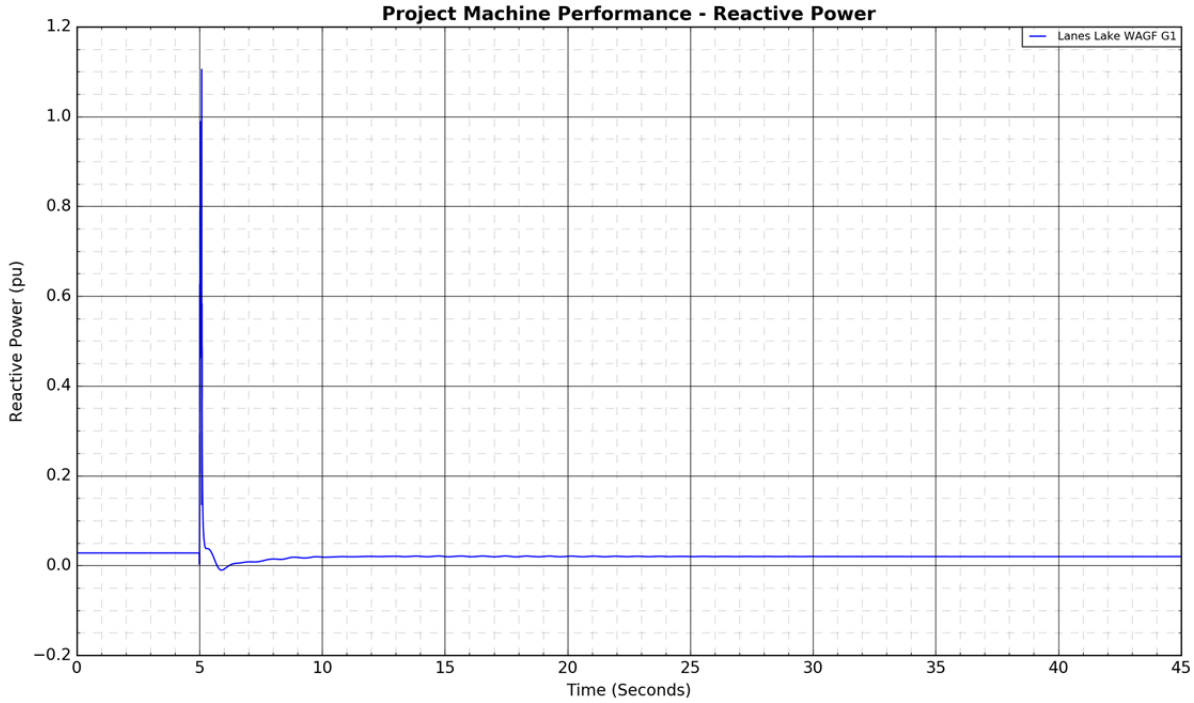
Project Machine Performance - Reactive Power
Lanes Lake WAGF G1
Reactive Power (pu)
Time (Seconds)
1.2
1.0
0.8
0.6
0.4
0.2
0.0
−0.2
0
5
10
15
20
25
30
35
40
45

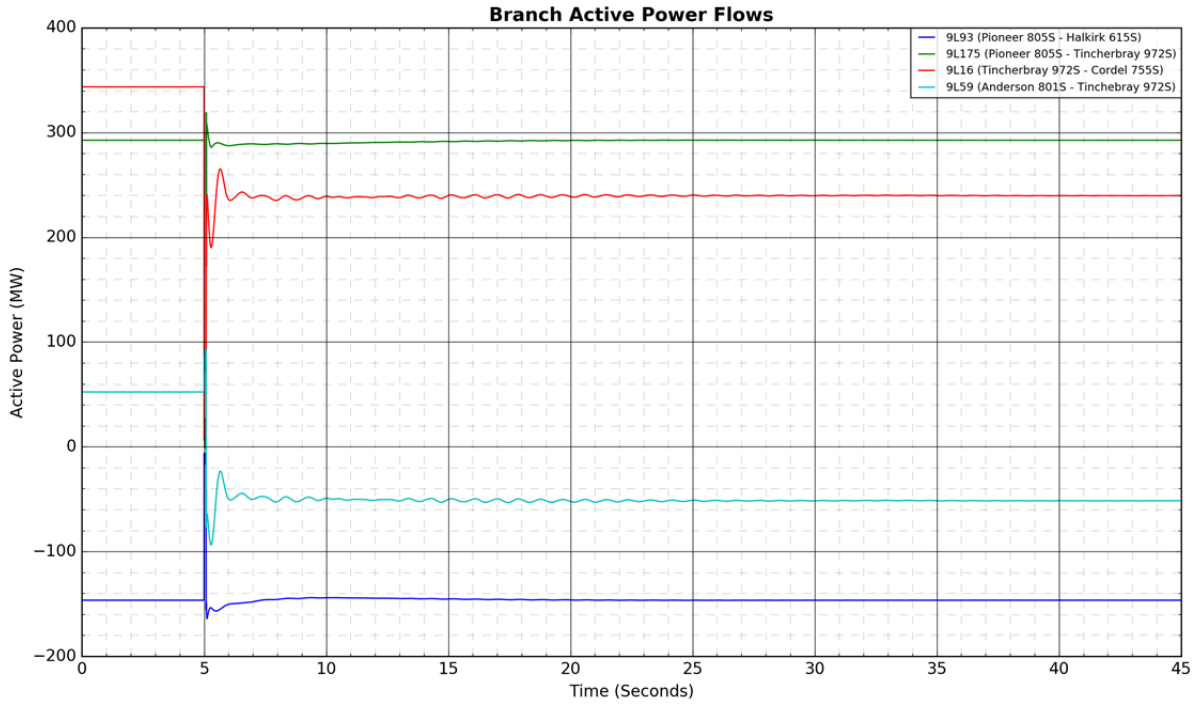
Branch Active Power Flows
9L93 (Pioneer 805S - Halkirk 615S)
9L175 (Pioneer 805S - Tincherbray 972S)
9L16 (Tincherbray 972S - Cordel 755S)
9L59 (Anderson 801S - Tinchebray 972S)
Active Power (MW)
Time (Seconds)

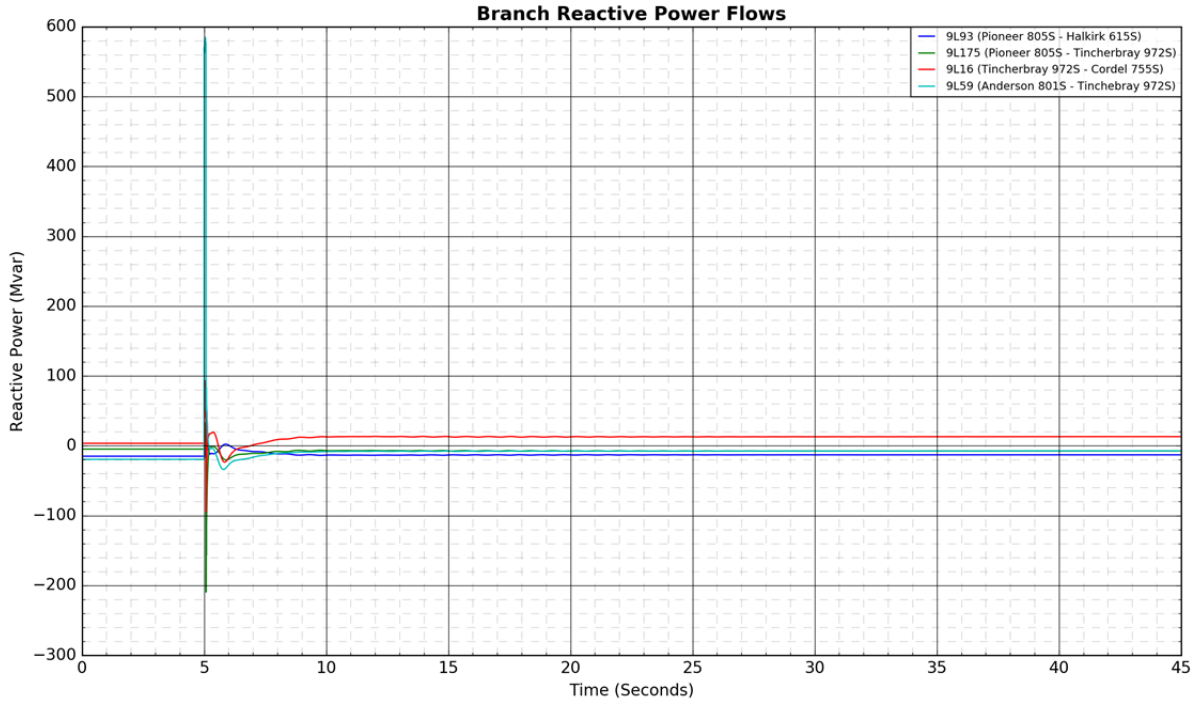
Branch Reactive Power Flows
9L93 (Pioneer 805S - Halkirk 615S)
9L175 (Pioneer 805S - Tincherbray 972S)
9L16 (Tincherbray 972S - Cordel 755S)
9L59 (Anderson 801S - Tinchebray 972S)
Reactive Power (Mvar)
Time (Seconds)

Figure A4-34: 9L20 (Cordel 755S - Nevis 766S): 3-phase fault at Nevis 766S

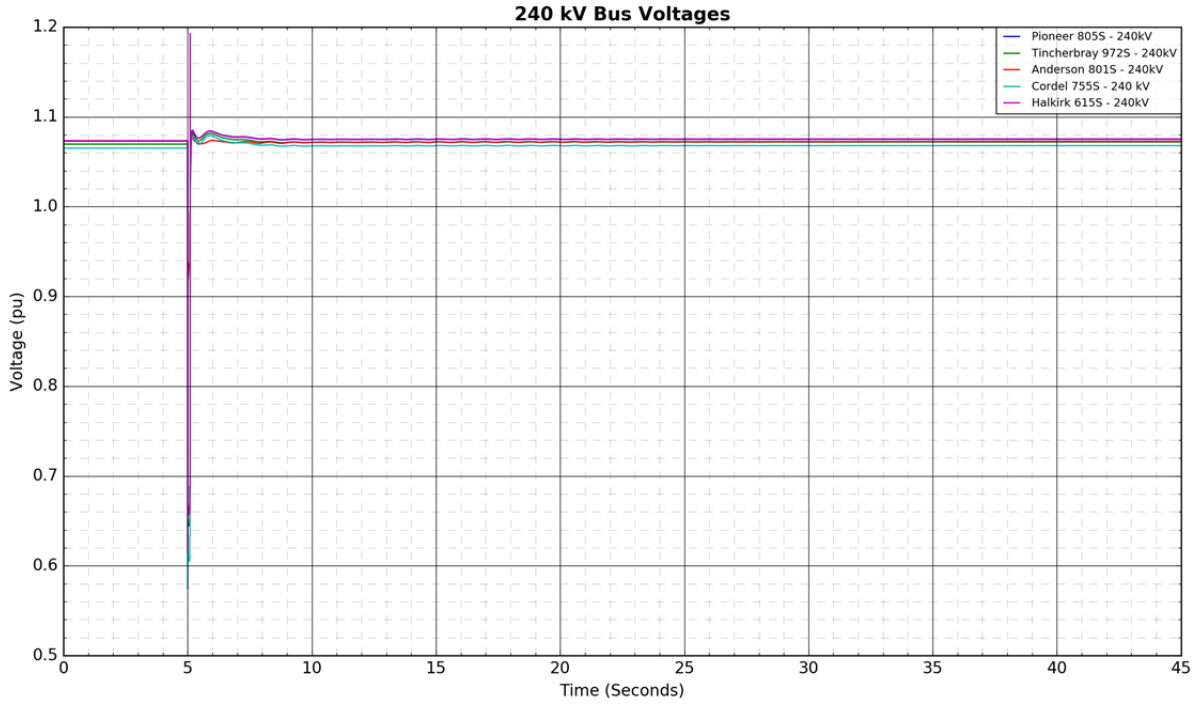

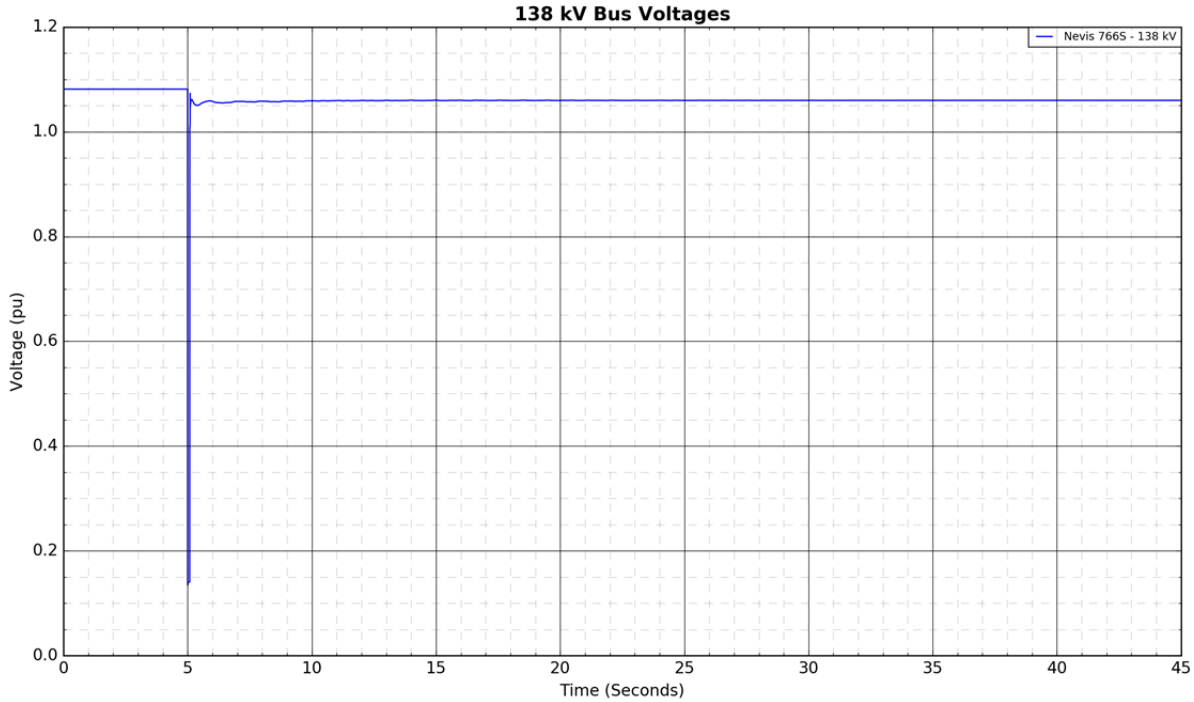

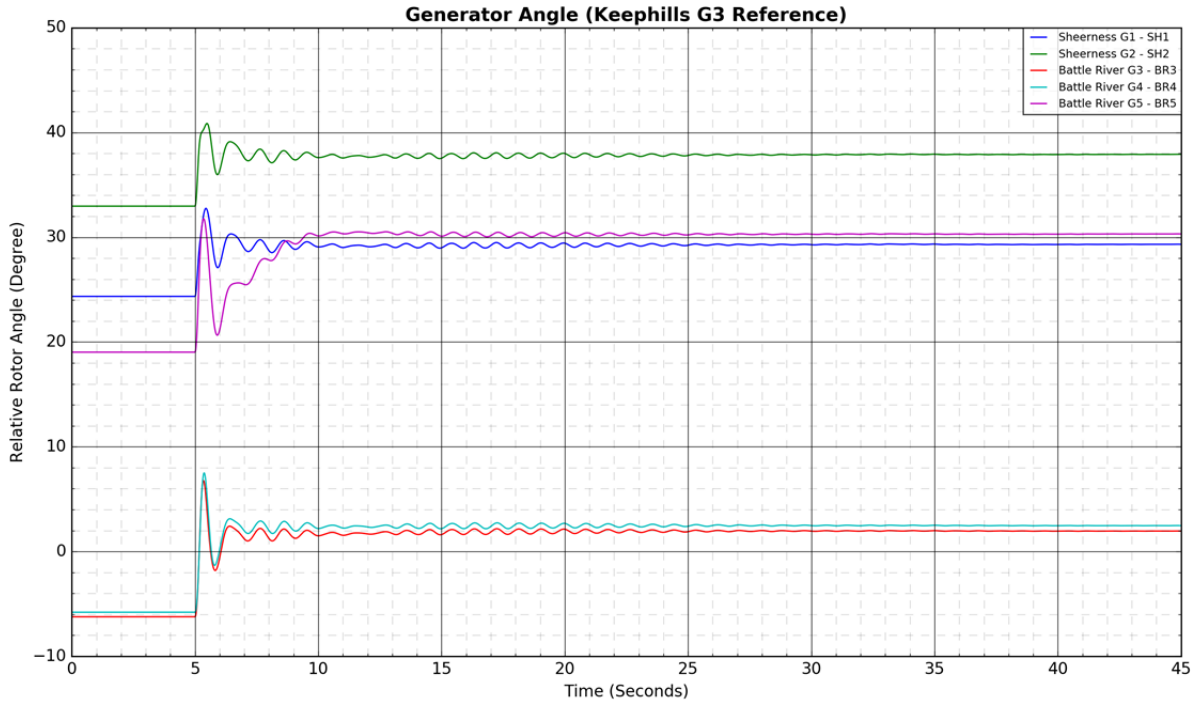
Generator Angle (Keephills G3 Reference)
Relative Rotor Angle (Degree)
Time (Seconds)
Sheerness G1 - SH1
Sheerness G2 - SH2
Battle River G3 - BR3
Battle River G4 - BR4
Battle River G5 - BR5

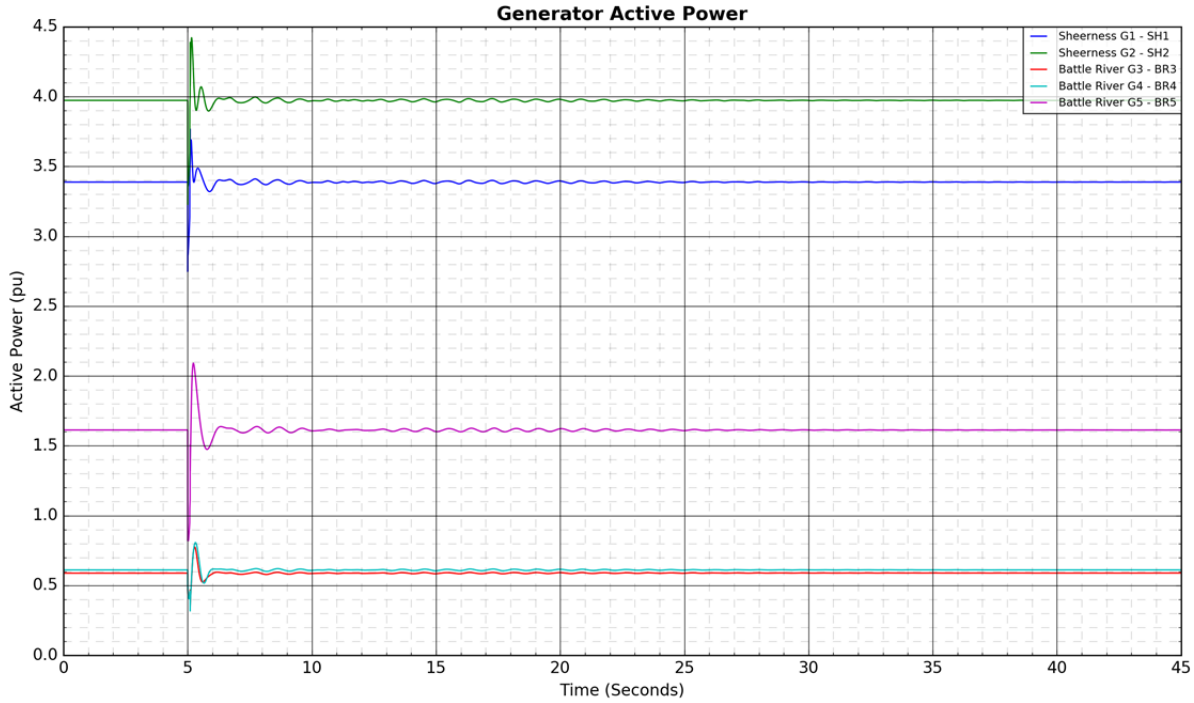
Generator Active Power
Active Power (pu)
Time (Seconds)
Sheerness G1 - SH1
Sheerness G2 - SH2
Battle River G3 - BR3
Battle River G4 - BR4
Battle River G5 - BR5

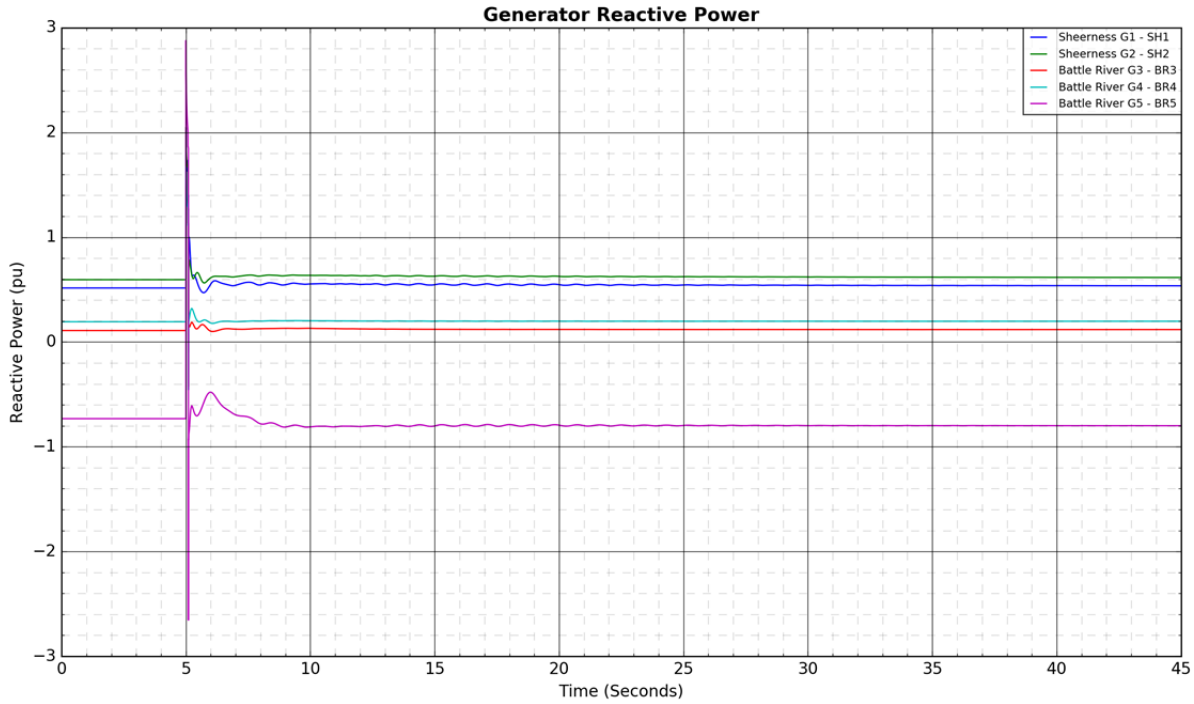
Generator Reactive Power
Sheerness G1 - SH1
Sheerness G2 - SH2
Battle River G3 - BR3
Battle River G4 - BR4
Battle River G5 - BR5
Reactive Power (pu)
Time (Seconds)

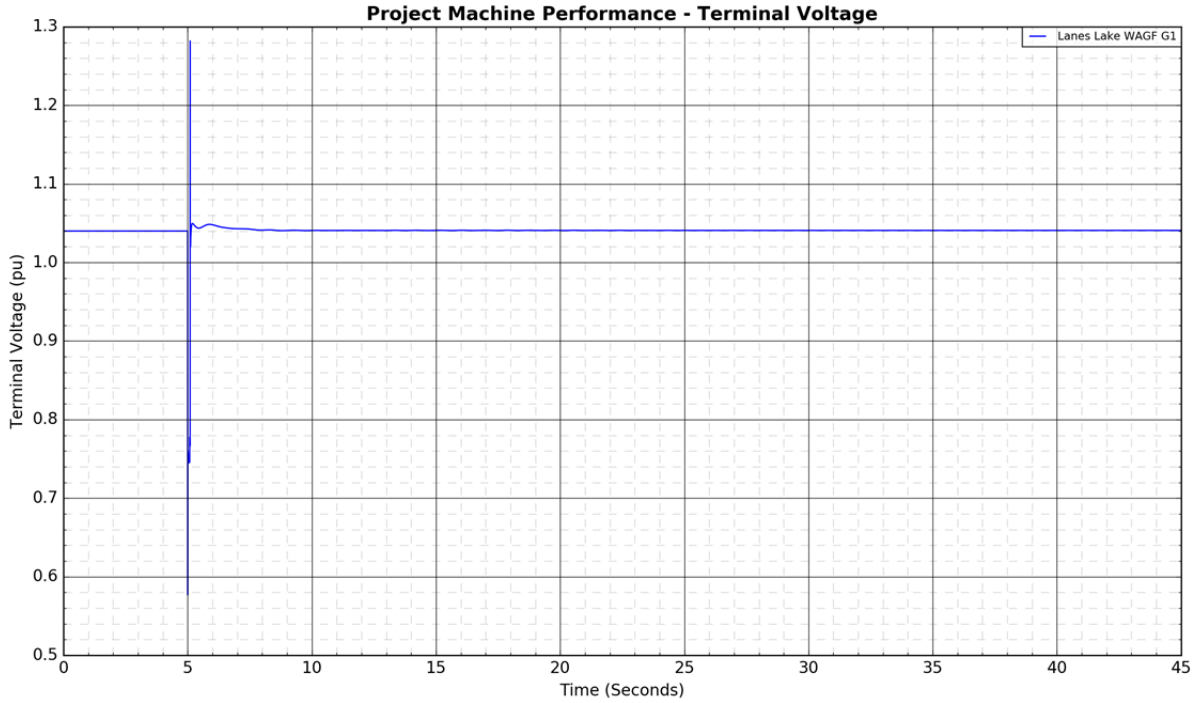
Project Machine Performance - Terminal Voltage
Lanes Lake WAGF G1
Terminal Voltage (pu)
Time (Seconds)


Project Machine Performance - Active Power
Lanes Lake WAGF G1
Active Power (pu)
Time (Seconds)
2.6
2.4
2.2
2.0
1.8
1.6
1.4
1.2
1.0
0.8
0
5
10
15
20
25
30
35
40
45

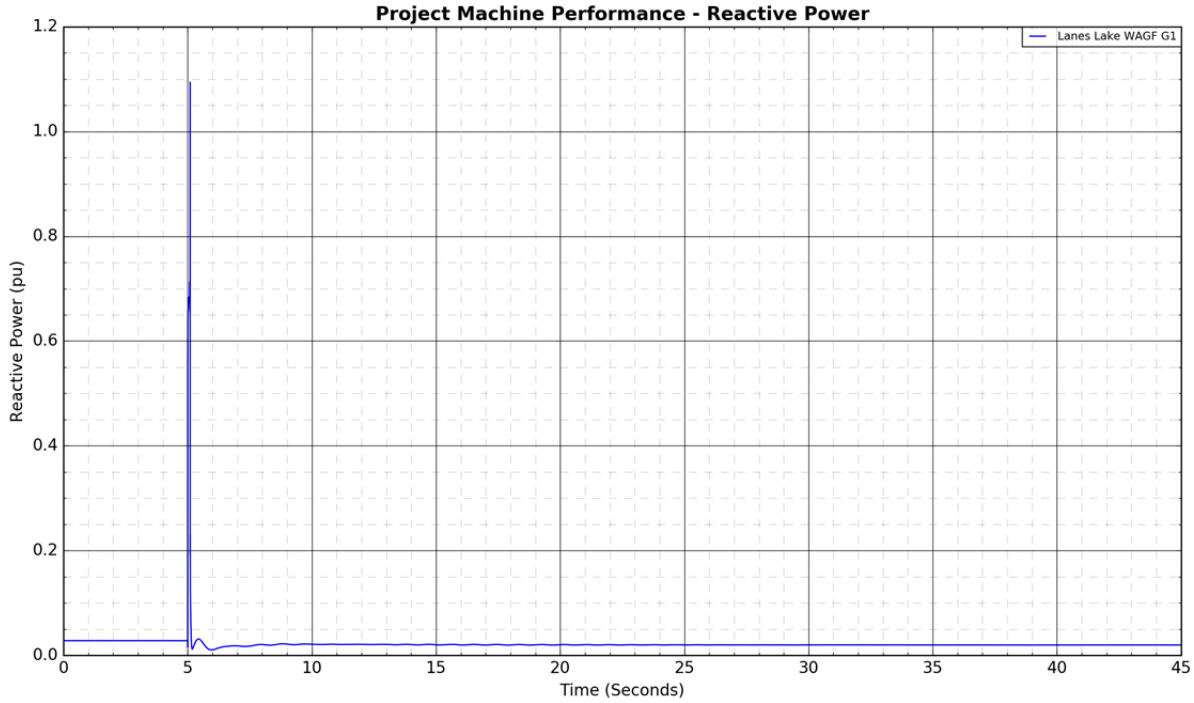
Project Machine Performance - Reactive Power
Lanes Lake WAGF G1
Reactive Power (pu)
Time (Seconds)
1.2
1.0
0.8
0.6
0.4
0.2
0.0
0
5
10
15
20
25
30
35
40
45

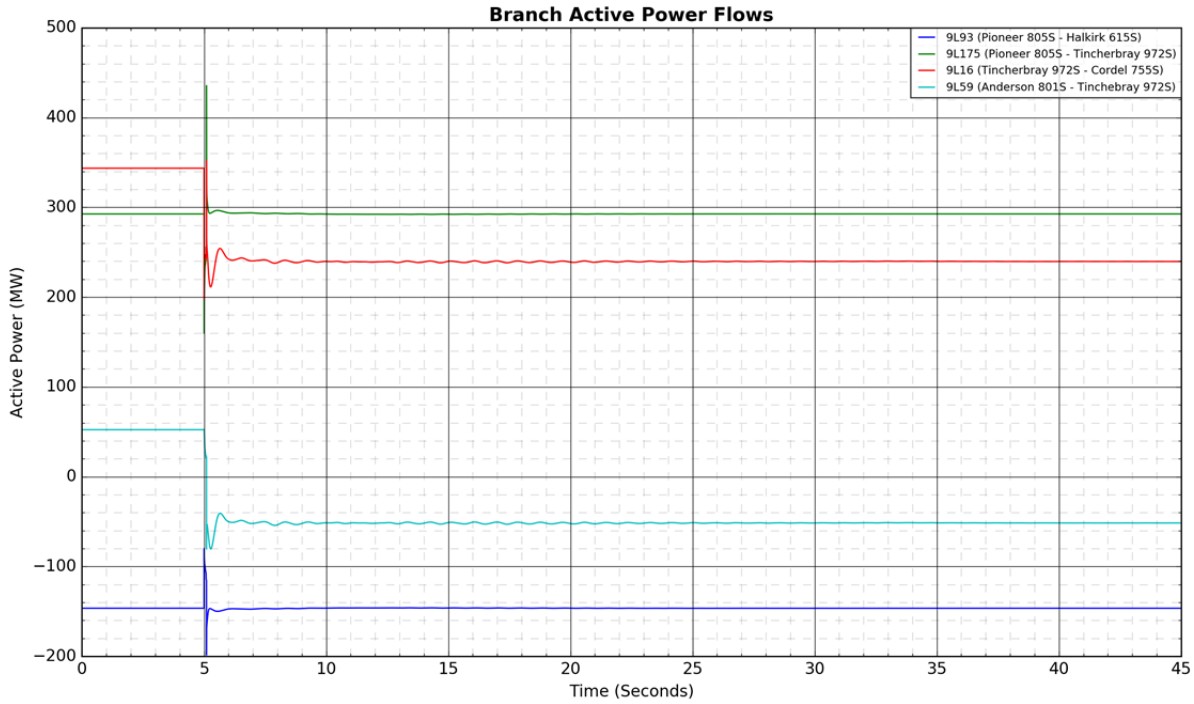
Branch Active Power Flows
9L93 (Pioneer 805S - Halkirk 615S)
9L175 (Pioneer 805S - Tincherbray 972S)
9L16 (Tincherbray 972S - Cordel 755S)
9L59 (Anderson 801S - Tinchebray 972S)
Active Power (MW)
Time (Seconds)

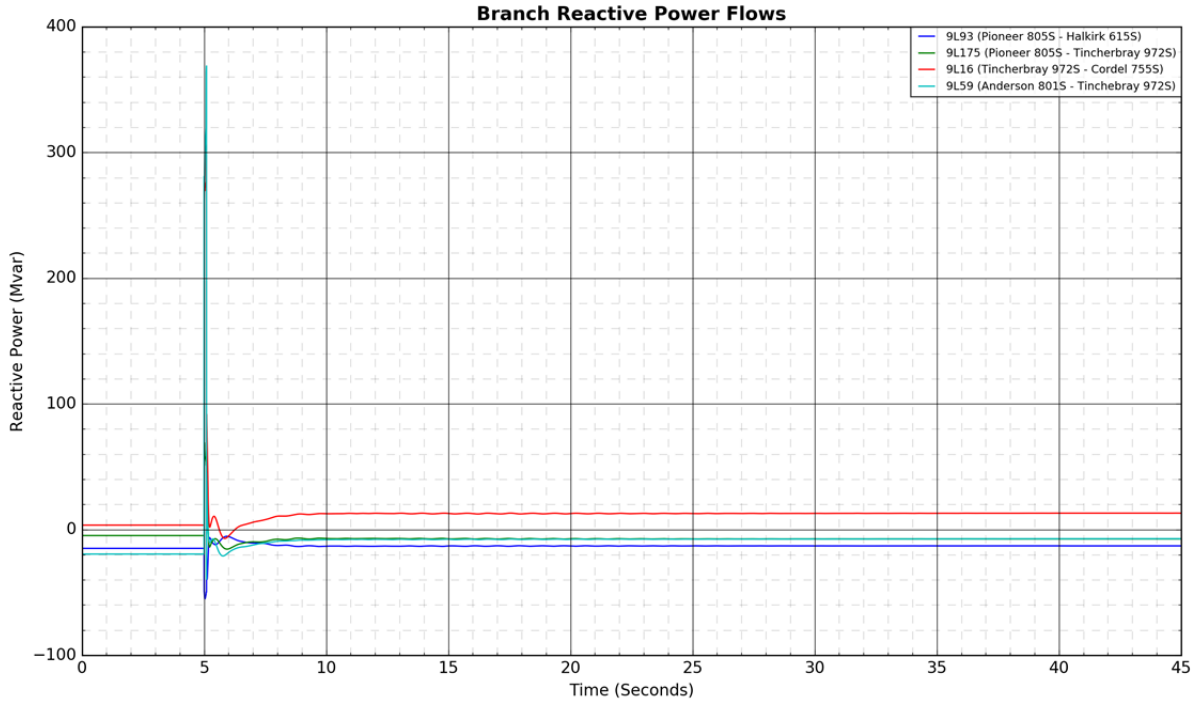
Branch Reactive Power Flows
9L93 (Pioneer 805S - Halkirk 615S)
9L175 (Pioneer 805S - Tincherbray 972S)
9L16 (Tincherbray 972S - Cordel 755S)
9L59 (Anderson 801S - Tinchebray 972S)
Reactive Power (Mvar)
Time (Seconds)

Figure A4-35: 9L16 (Tinchebray 972S - Cordel 755S): 3-phase fault at Cordel 755S

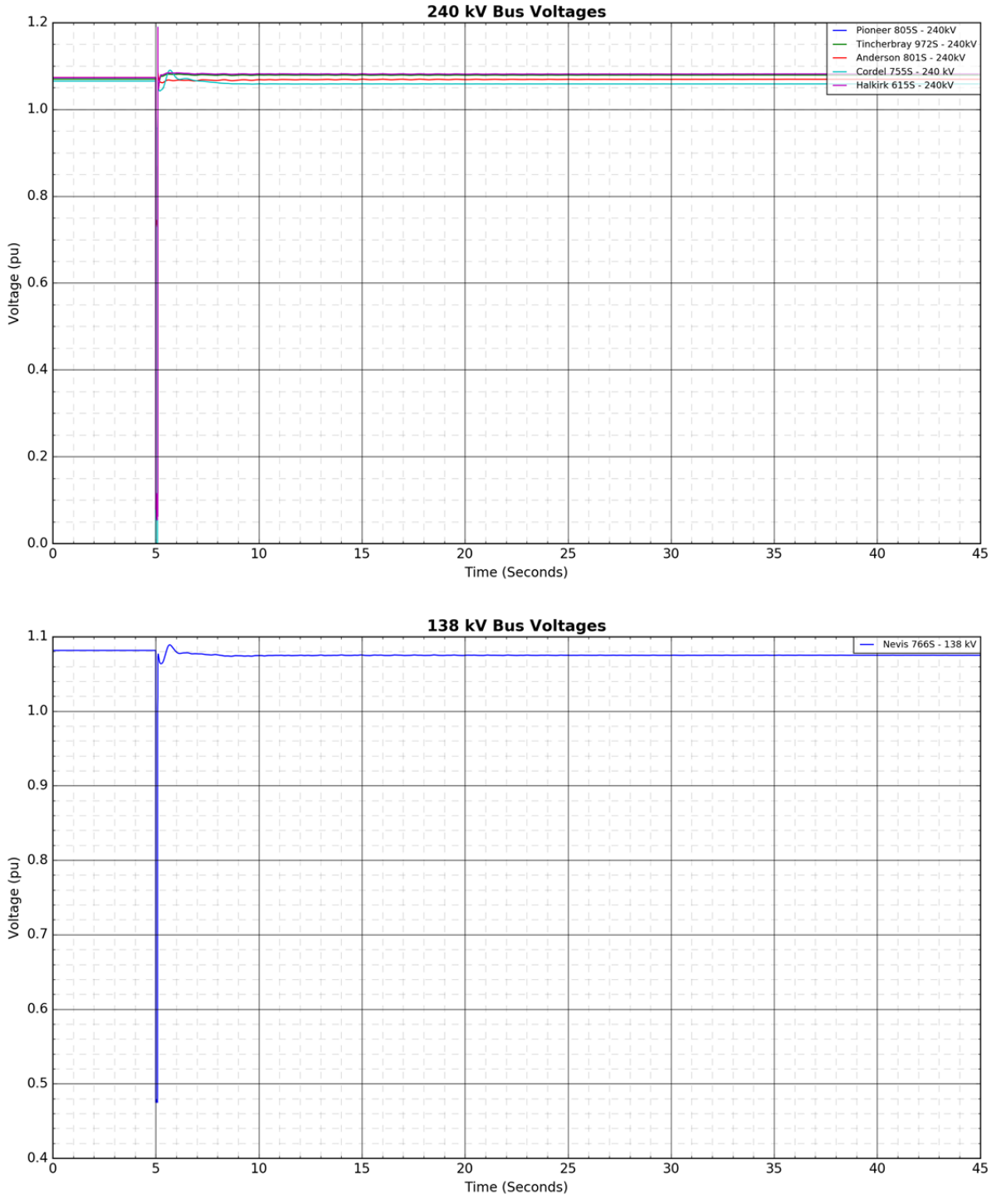

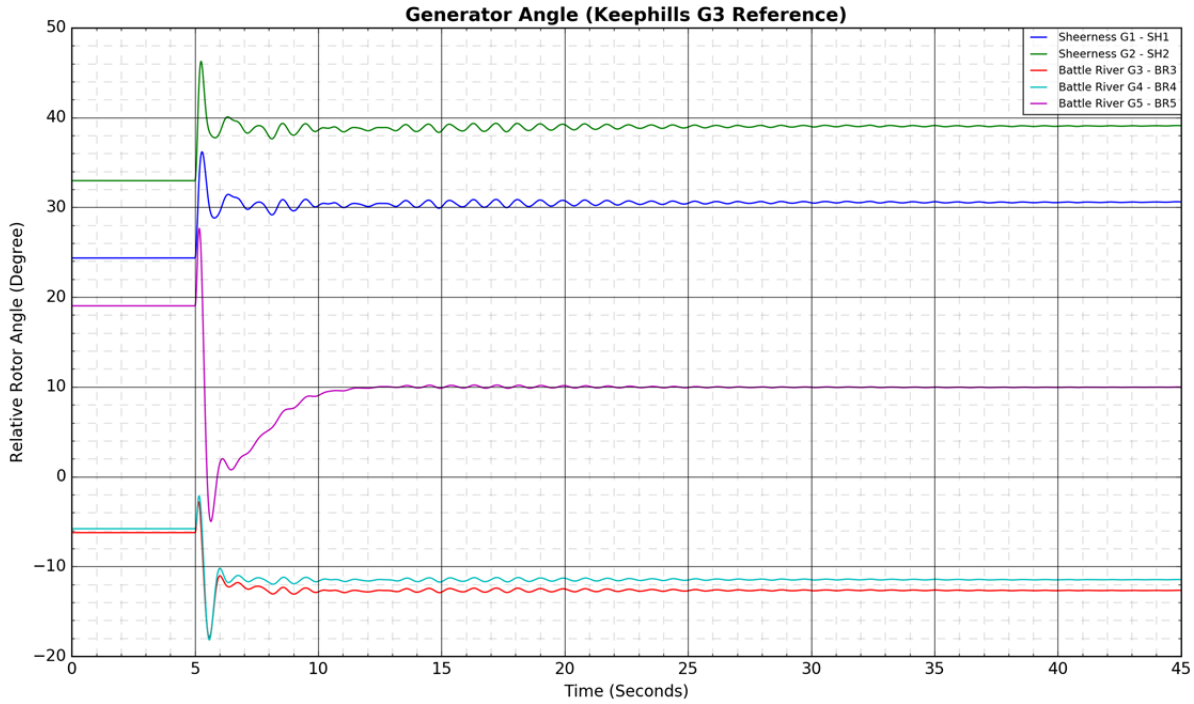
Generator Angle (Keephills G3 Reference)
Relative Rotor Angle (Degree)
Time (Seconds)
Sheerness G1 - SH1
Sheerness G2 - SH2
Battle River G3 - BR3
Battle River G4 - BR4
Battle River G5 - BR5

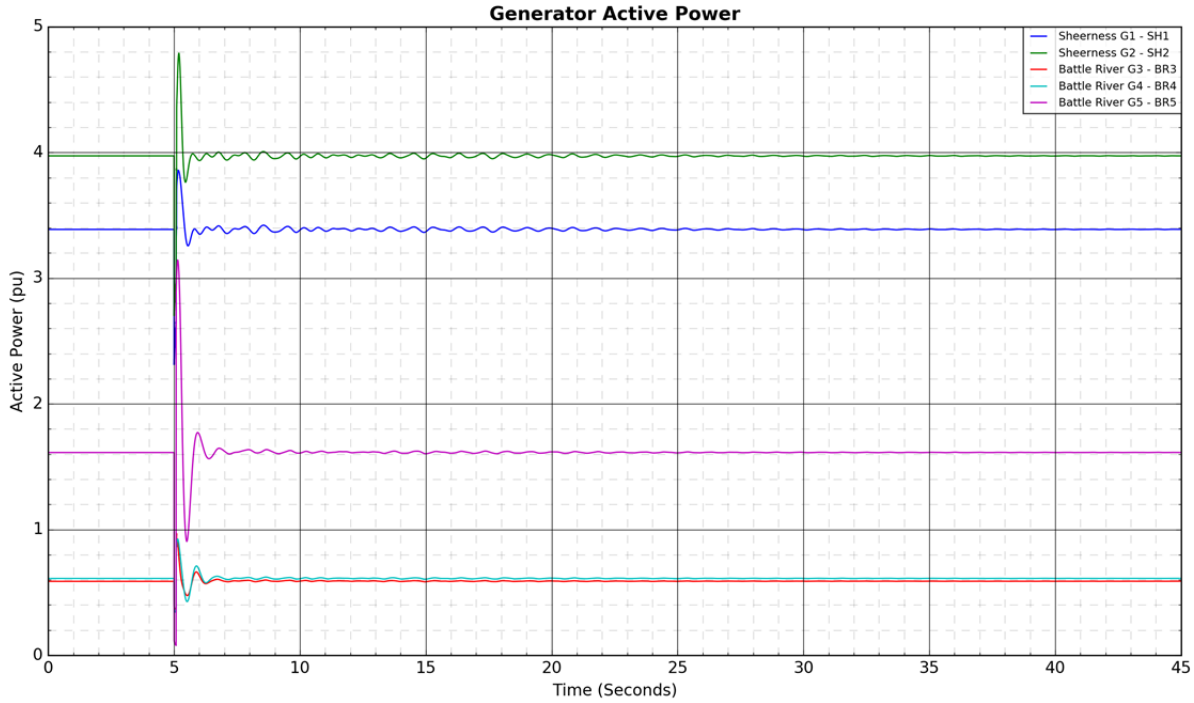
Generator Active Power
Active Power (pu)
Time (Seconds)
Sheerness G1 - SH1
Sheerness G2 - SH2
Battle River G3 - BR3
Battle River G4 - BR4
Battle River G5 - BR5

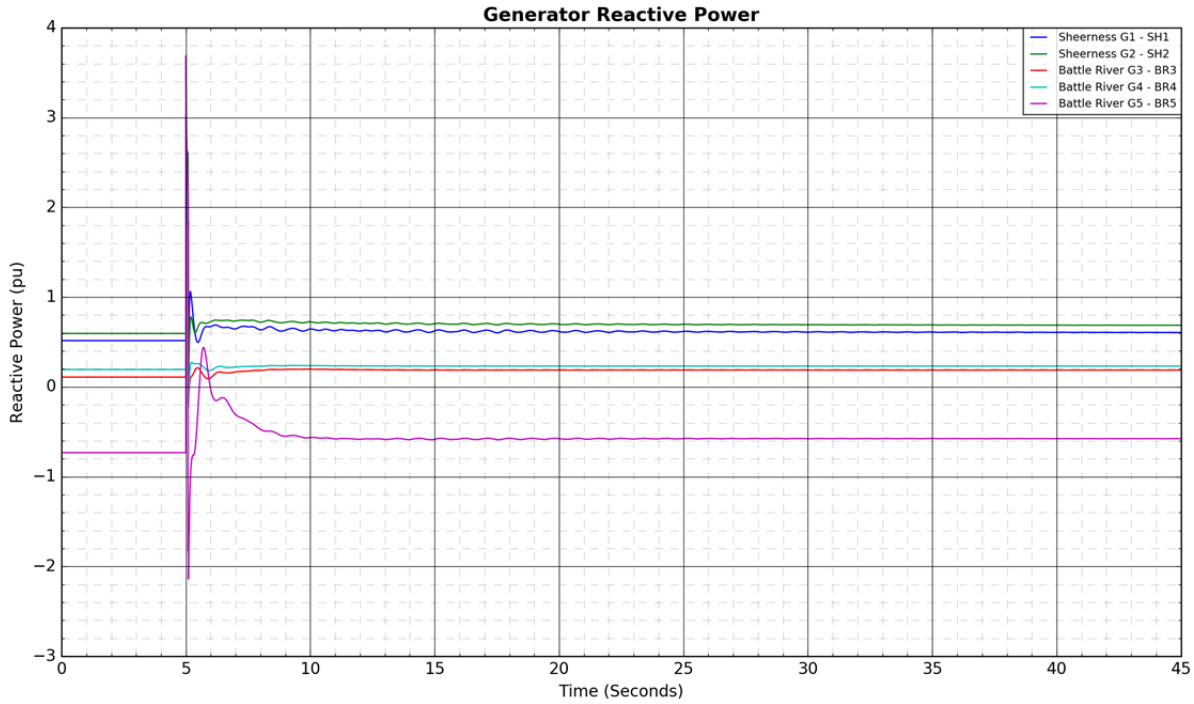
Generator Reactive Power
Sheerness G1 - SH1
Sheerness G2 - SH2
Battle River G3 - BR3
Battle River G4 - BR4
Battle River G5 - BR5
Reactive Power (pu)
Time (Seconds)

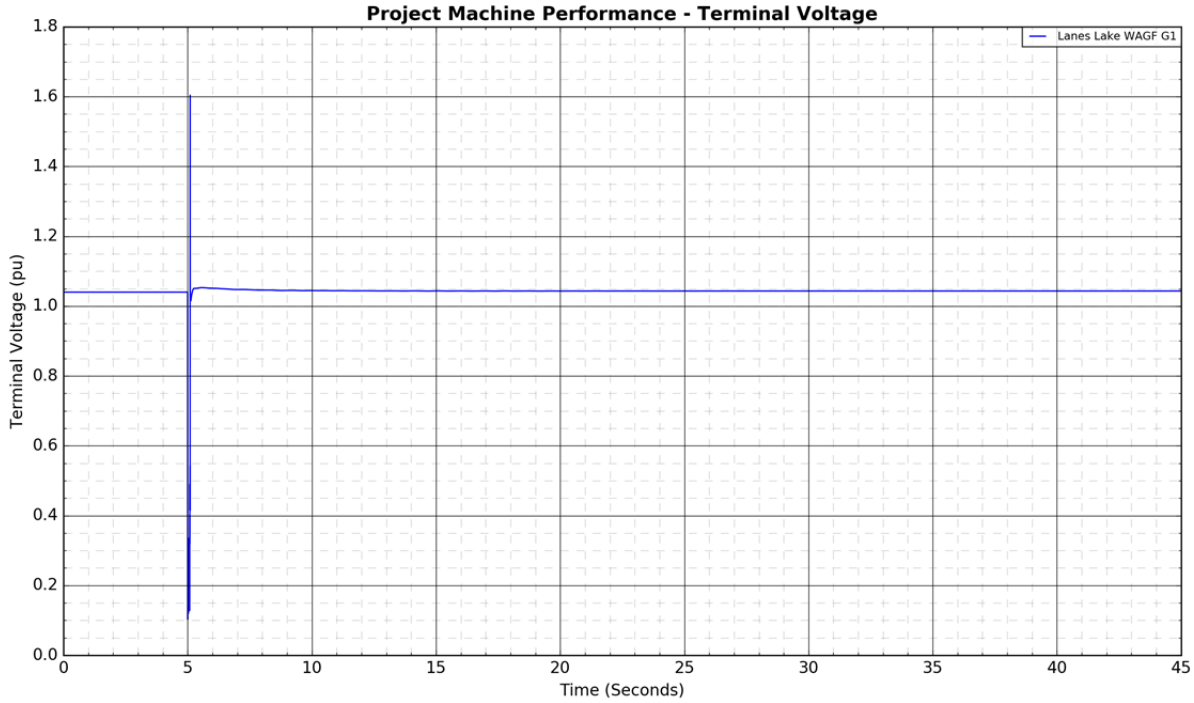
Project Machine Performance - Terminal Voltage
Lanes Lake WAGF G1
Terminal Voltage (pu)
Time (Seconds)


Project Machine Performance - Active Power
Lanes Lake WAGF G1
Active Power (pu)
Time (Seconds)
0.0
0.2
0.4
0.6
0.8
1.0
1.2
1.4
1.6
1.8
0
5
10
15
20
25
30
35
40
45

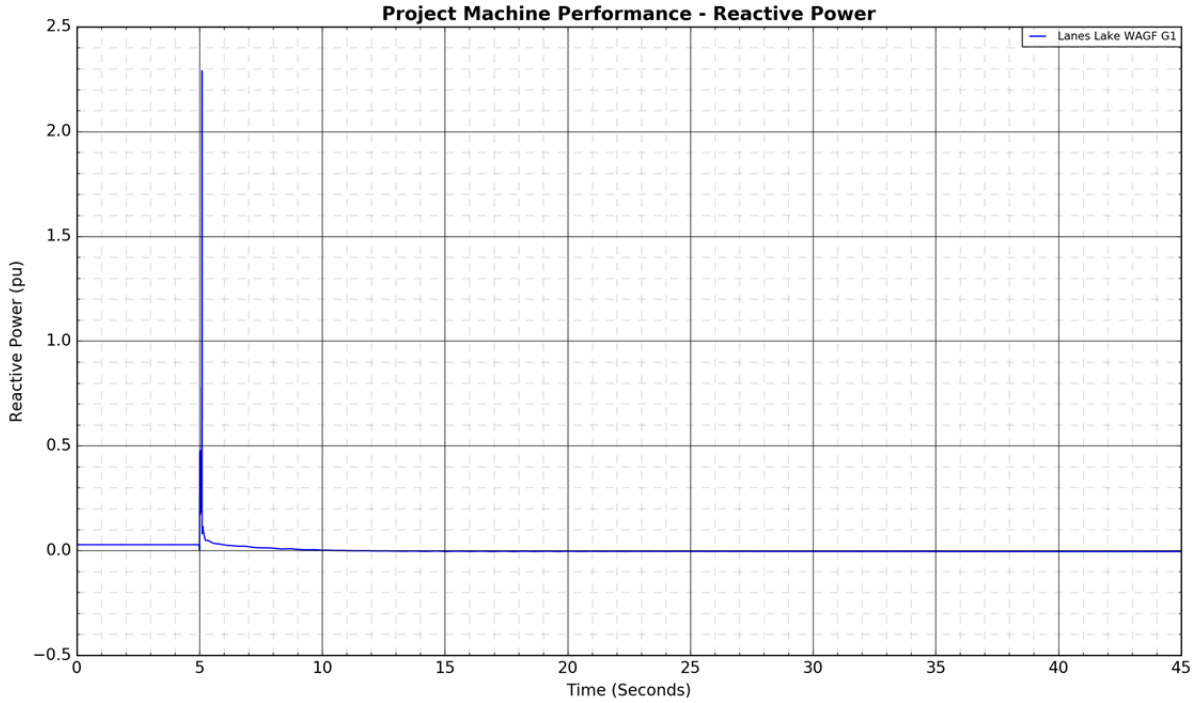
Project Machine Performance - Reactive Power
Lanes Lake WAGF G1
Reactive Power (pu)
Time (Seconds)
−0.5
0.0
0.5
1.0
1.5
2.0
2.5
0
5
10
15
20
25
30
35
40
45


Branch Active Power Flows
9L93 (Pioneer 805S - Halkirk 615S)
9L175 (Pioneer 805S - Tincherbray 972S)
9L59 (Anderson 801S - Tinchebray 972S)
Active Power (MW)
Time (Seconds)

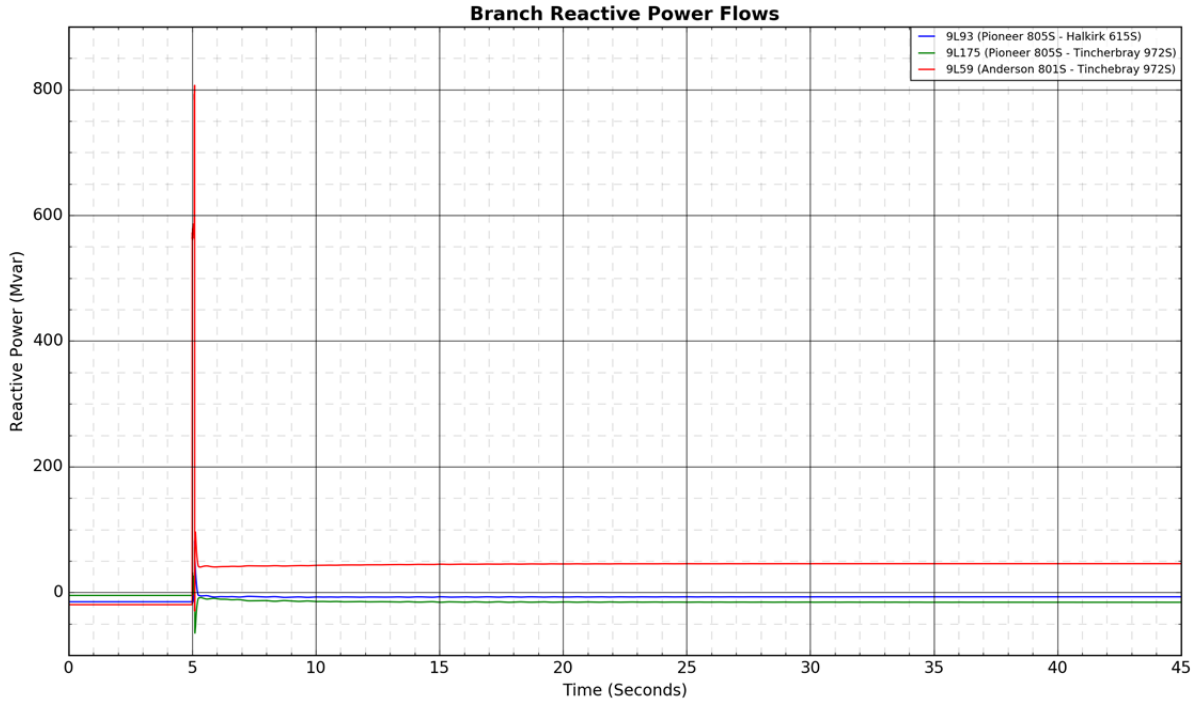
Branch Reactive Power Flows
9L93 (Pioneer 805S - Halkirk 615S)
9L175 (Pioneer 805S - Tincherbray 972S)
9L59 (Anderson 801S - Tinchebray 972S)
Reactive Power (Mvar)
Time (Seconds)

Figure A4-36: 9L16 (Tinchebray 972S - Cordel 755S): 3-phase fault at Tinchebray 972S



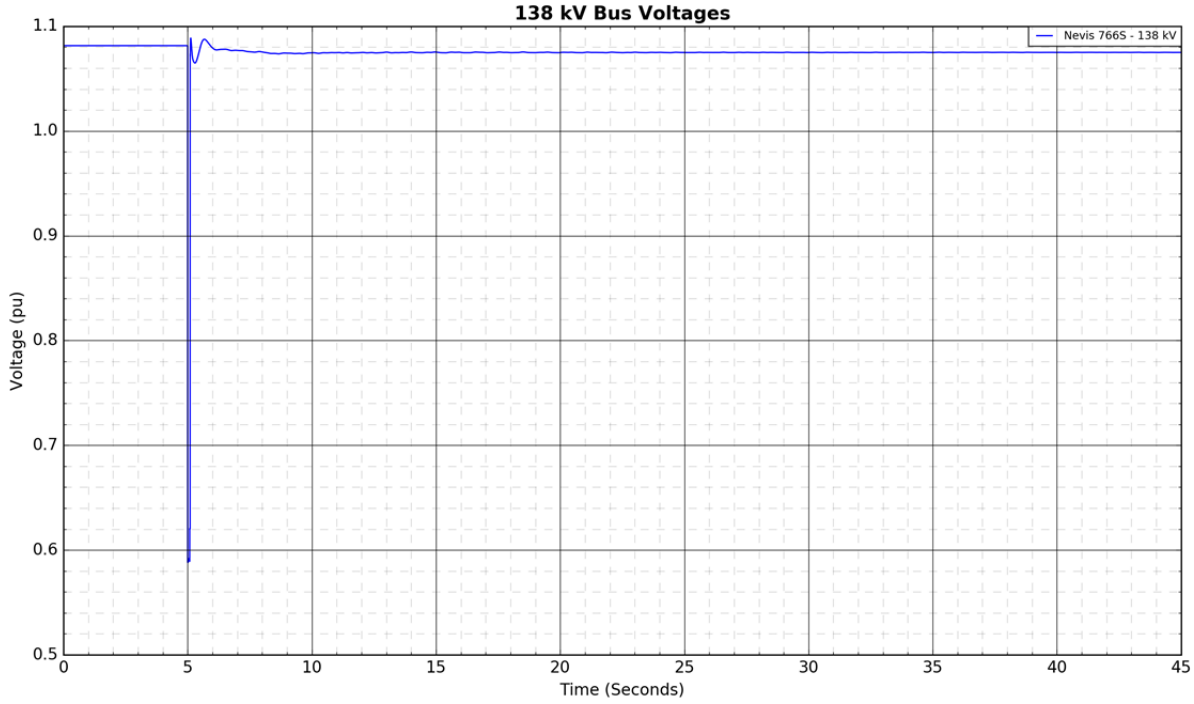

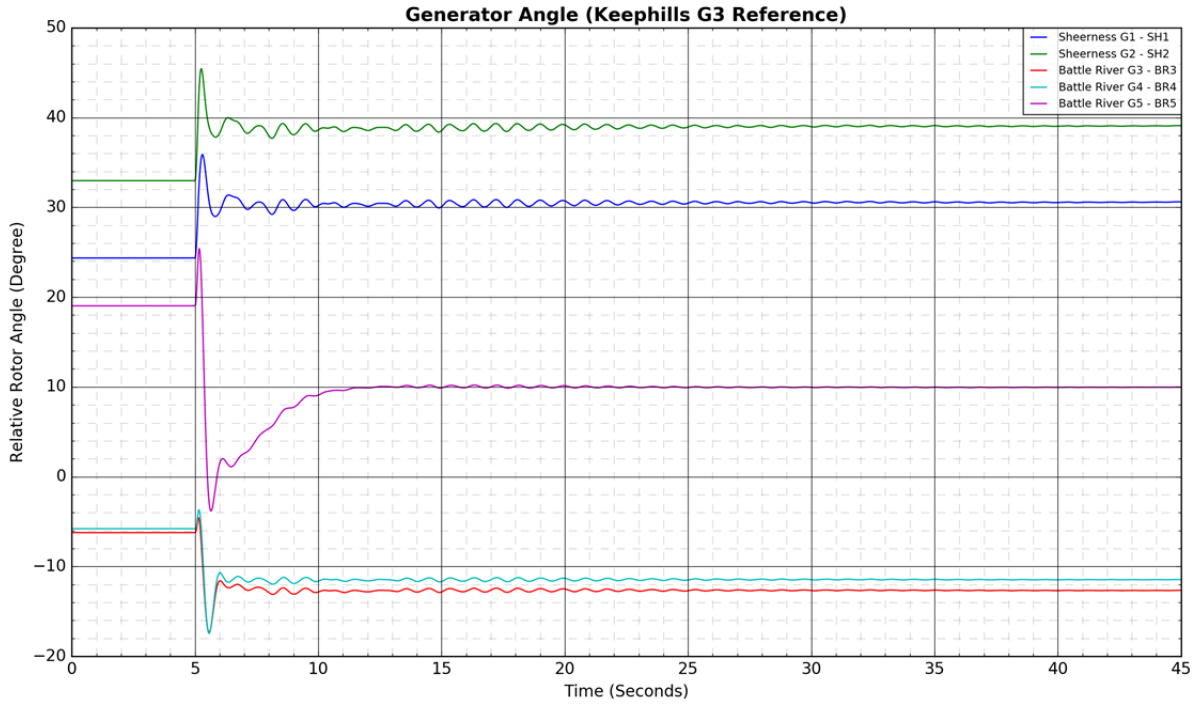
Generator Angle (Keephills G3 Reference)
Relative Rotor Angle (Degree)
Time (Seconds)
Sheerness G1 - SH1
Sheerness G2 - SH2
Battle River G3 - BR3
Battle River G4 - BR4
Battle River G5 - BR5

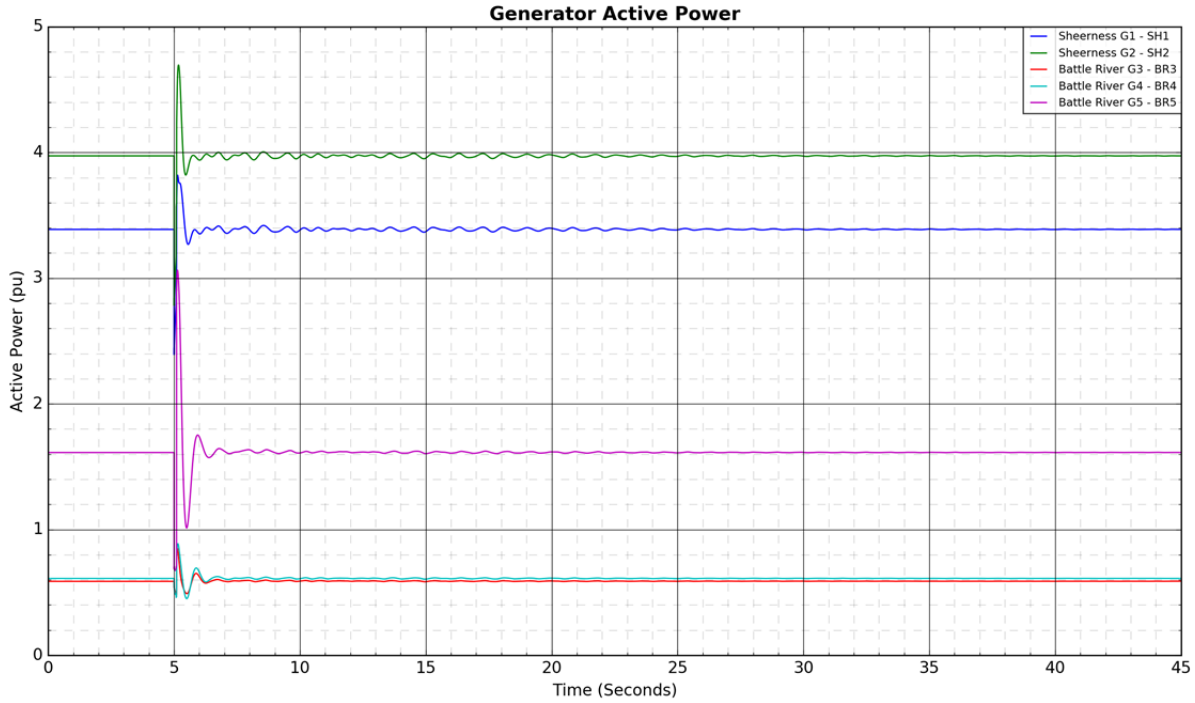
Generator Active Power
Active Power (pu)
Time (Seconds)
Sheerness G1 - SH1
Sheerness G2 - SH2
Battle River G3 - BR3
Battle River G4 - BR4
Battle River G5 - BR5

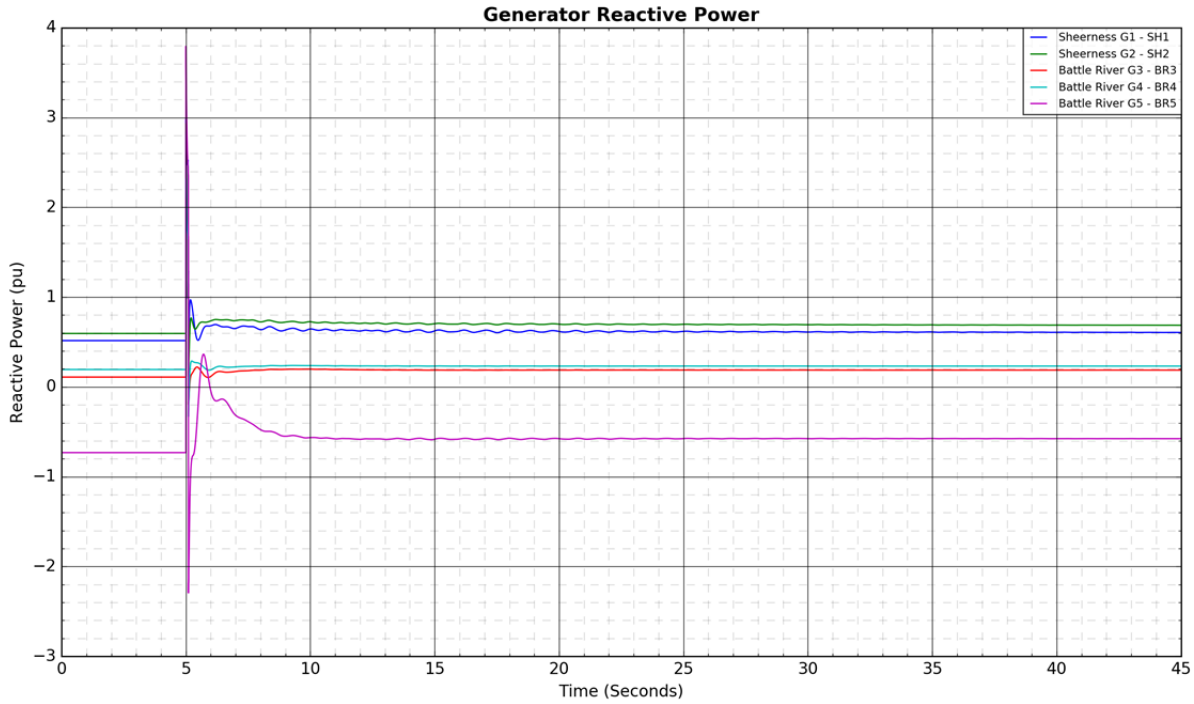
Generator Reactive Power
Sheerness G1 - SH1
Sheerness G2 - SH2
Battle River G3 - BR3
Battle River G4 - BR4
Battle River G5 - BR5
Reactive Power (pu)
Time (Seconds)

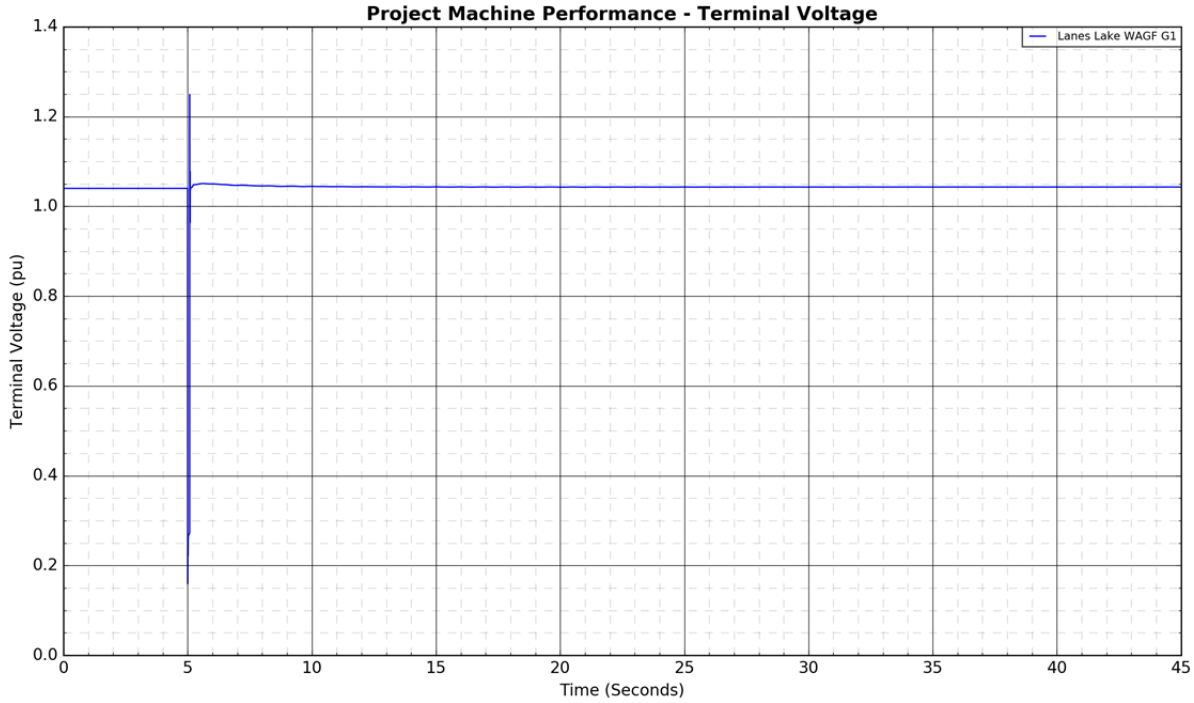
Project Machine Performance - Terminal Voltage
Lanes Lake WAGF G1
Terminal Voltage (pu)
Time (Seconds)

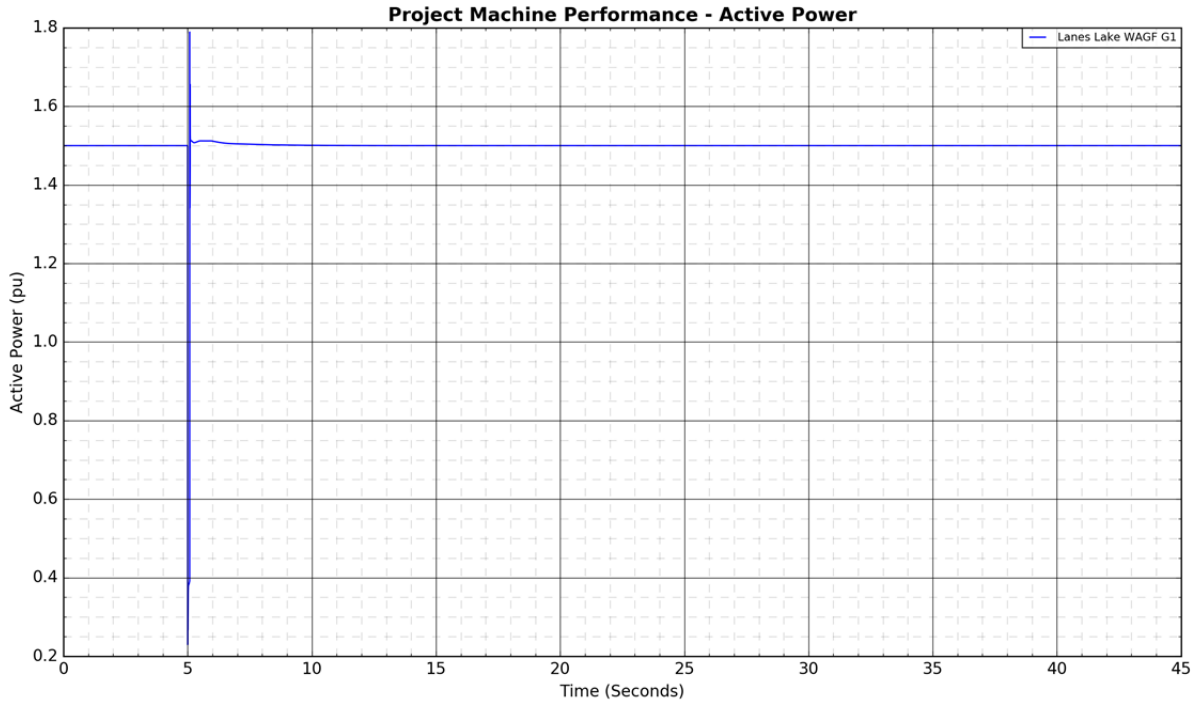
Project Machine Performance - Active Power
Lanes Lake WAGF G1
Active Power (pu)
Time (Seconds)
1.8
1.6
1.4
1.2
1.0
0.8
0.6
0.4
0.2
0
5
10
15
20
25
30
35
40
45

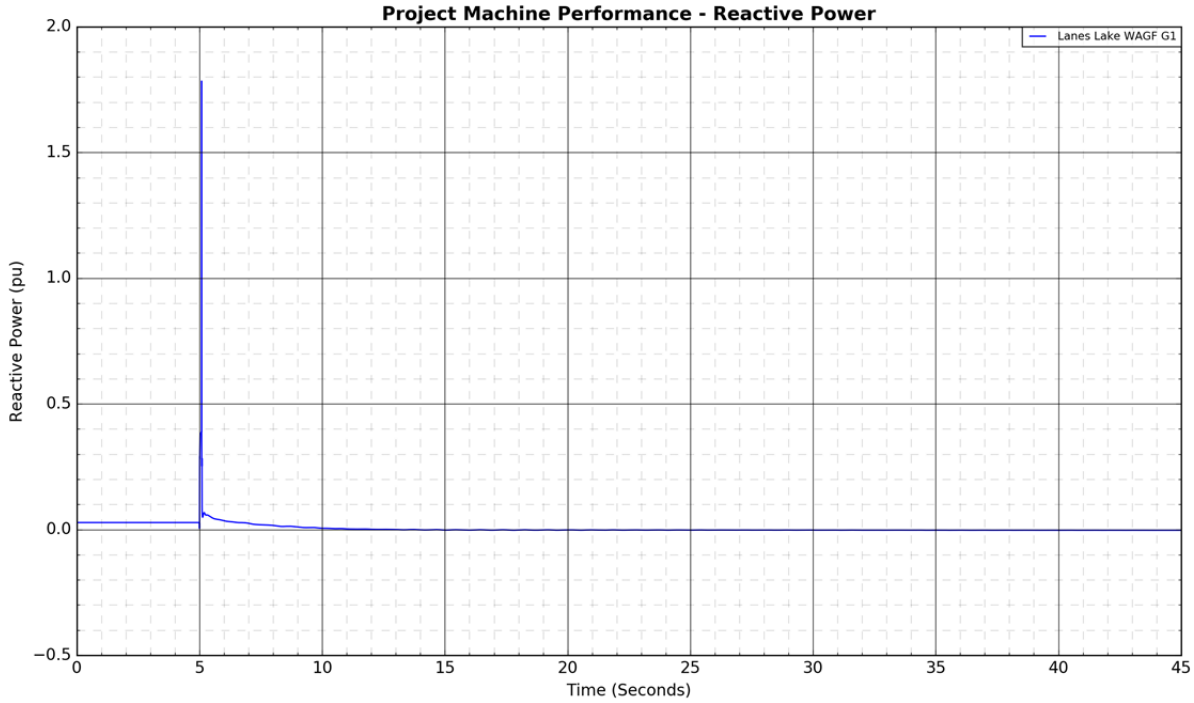
Project Machine Performance - Reactive Power
Lanes Lake WAGF G1
Reactive Power (pu)
Time (Seconds)
2.0
1.5
1.0
0.5
0.0
−0.5
0
5
10
15
20
25
30
35
40
45


Branch Active Power Flows
9L93 (Pioneer 805S - Halkirk 615S)
9L175 (Pioneer 805S - Tincherbray 972S)
9L59 (Anderson 801S - Tinchebray 972S)
Active Power (MW)
Time (Seconds)

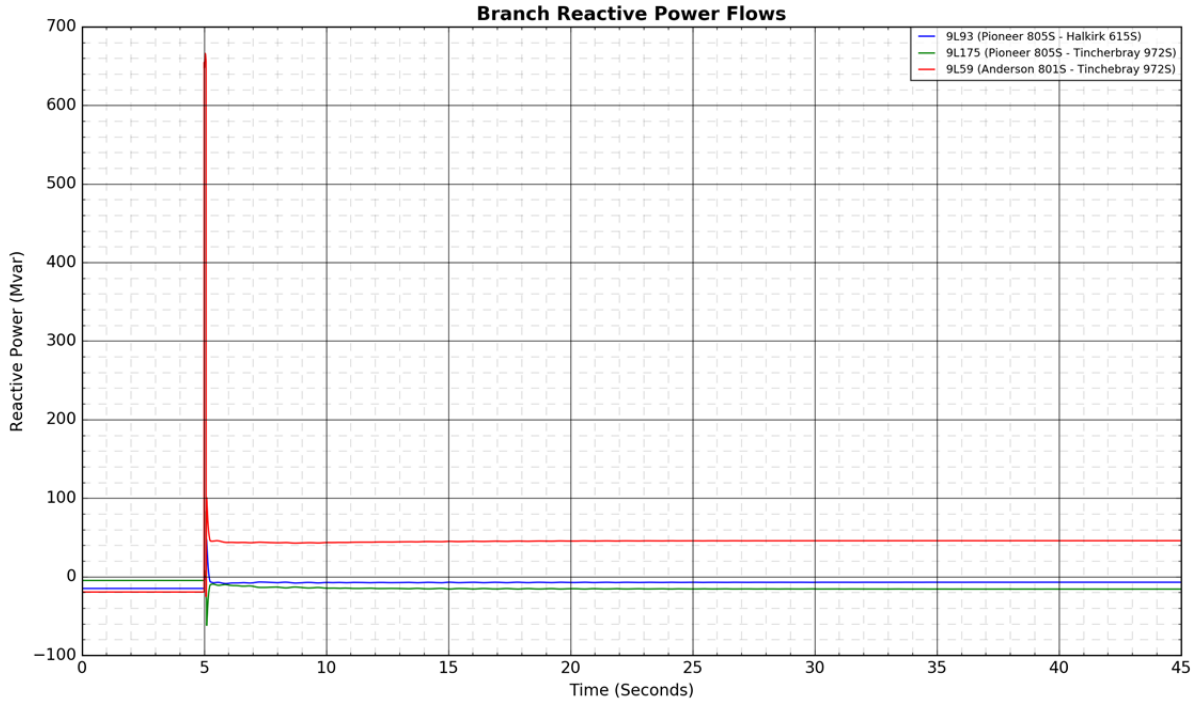
Branch Reactive Power Flows
9L93 (Pioneer 805S - Halkirk 615S)
9L175 (Pioneer 805S - Tincherbray 972S)
9L59 (Anderson 801S - Tinchebray 972S)
Reactive Power (Mvar)
Time (Seconds)

Figure A4-37: 9L59 (Anderson 801S - Tinchebray 972S): 3-phase fault at Anderson 801S

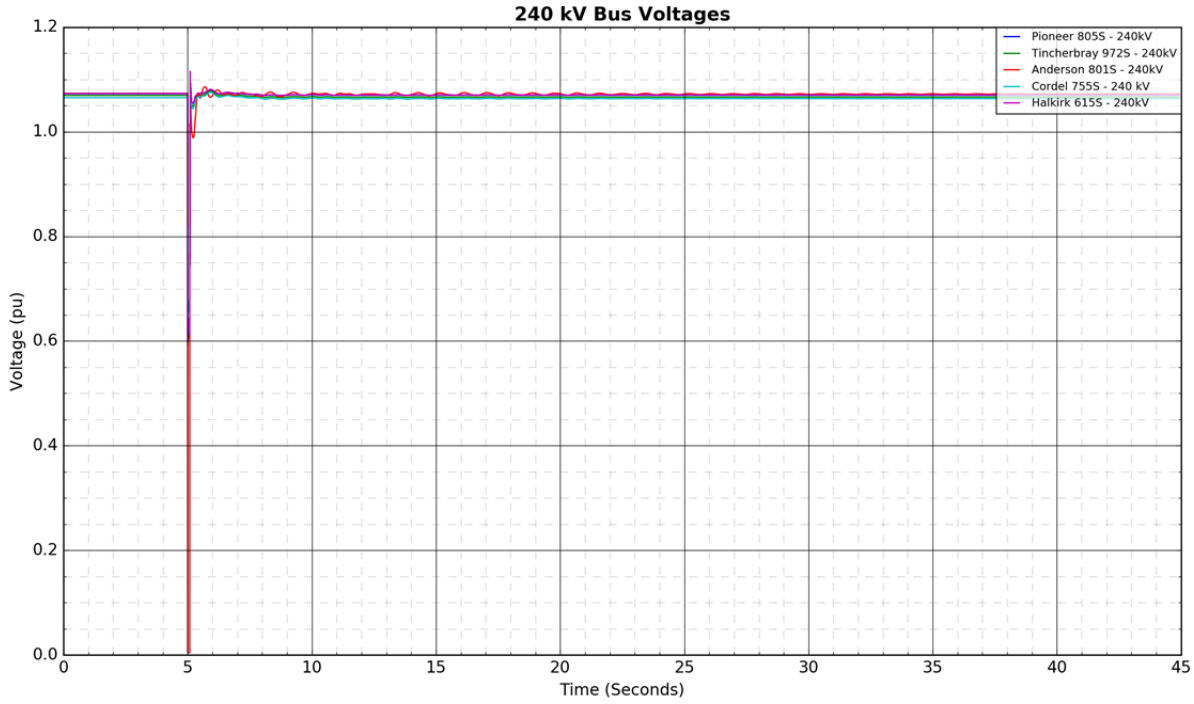

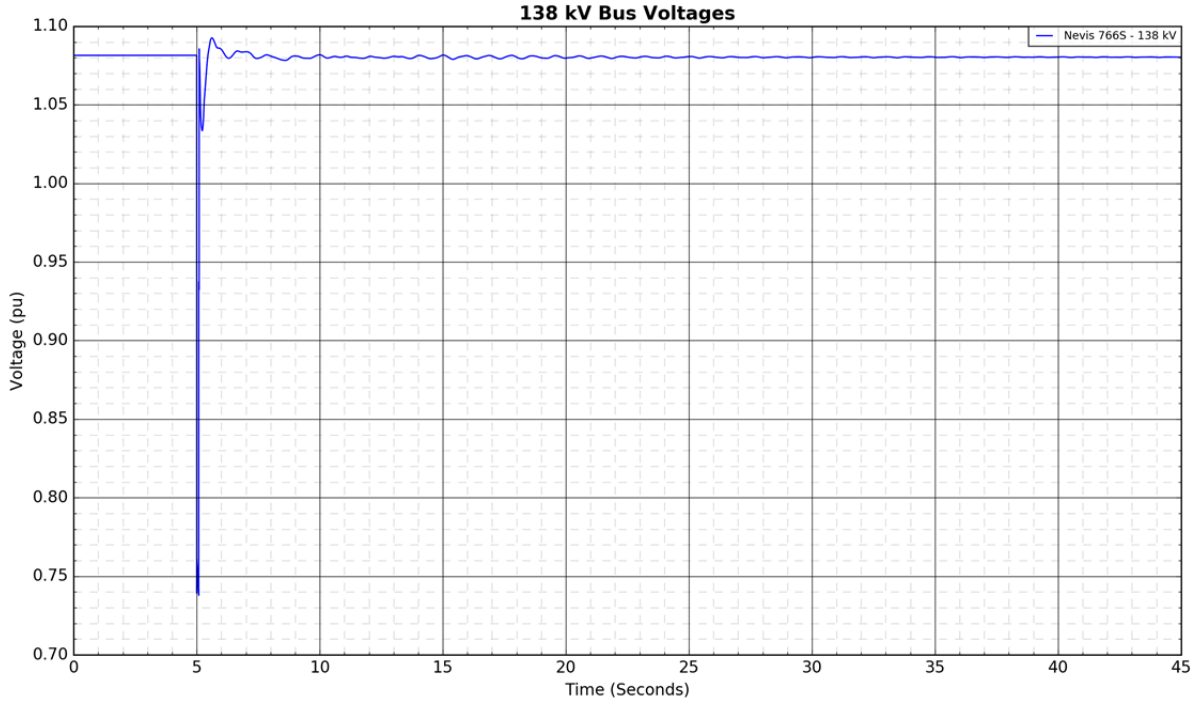

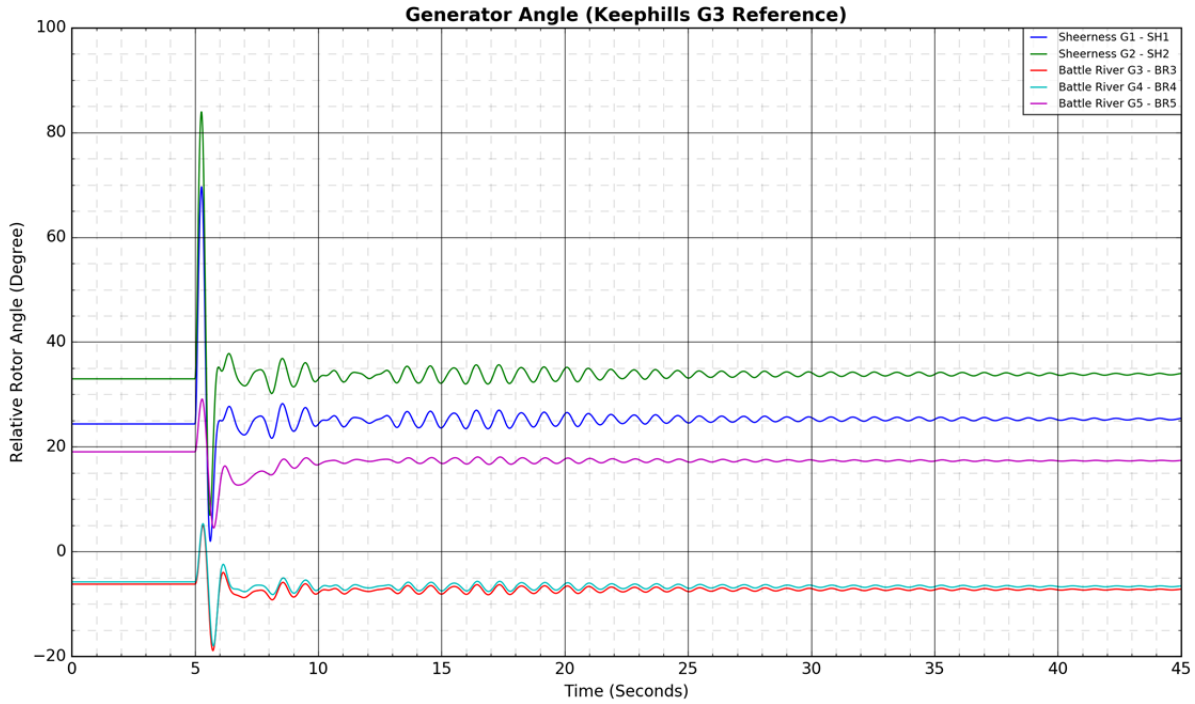
Generator Angle (Keephills G3 Reference)
Relative Rotor Angle (Degree)
Time (Seconds)
Sheerness G1 - SH1
Sheerness G2 - SH2
Battle River G3 - BR3
Battle River G4 - BR4
Battle River G5 - BR5

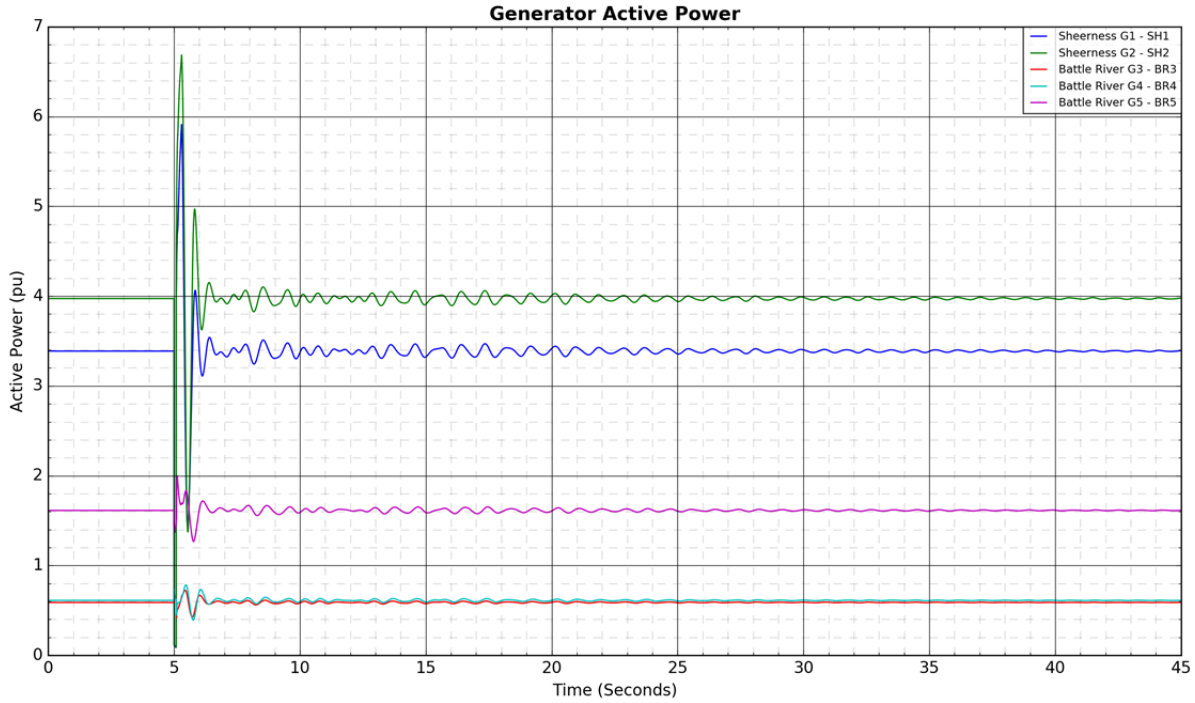
Generator Active Power
Active Power (pu)
Time (Seconds)
Sheerness G1 - SH1
Sheerness G2 - SH2
Battle River G3 - BR3
Battle River G4 - BR4
Battle River G5 - BR5

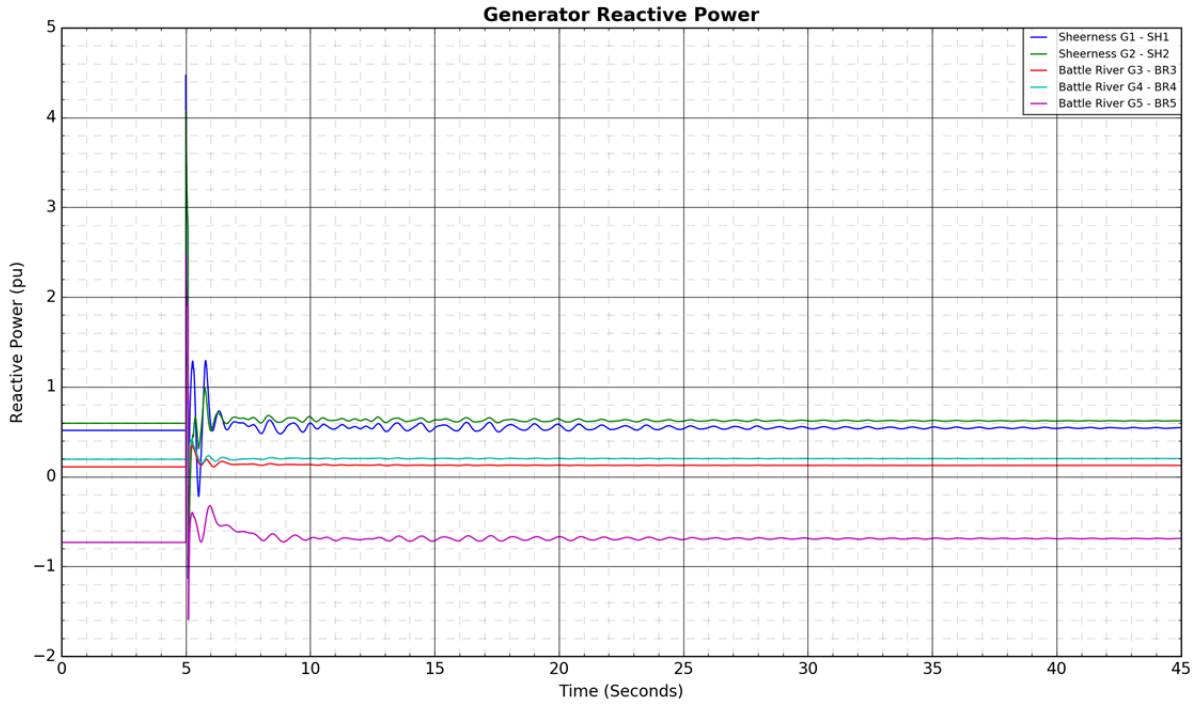
Generator Reactive Power
Sheerness G1 - SH1
Sheerness G2 - SH2
Battle River G3 - BR3
Battle River G4 - BR4
Battle River G5 - BR5
Reactive Power (pu)
Time (Seconds)

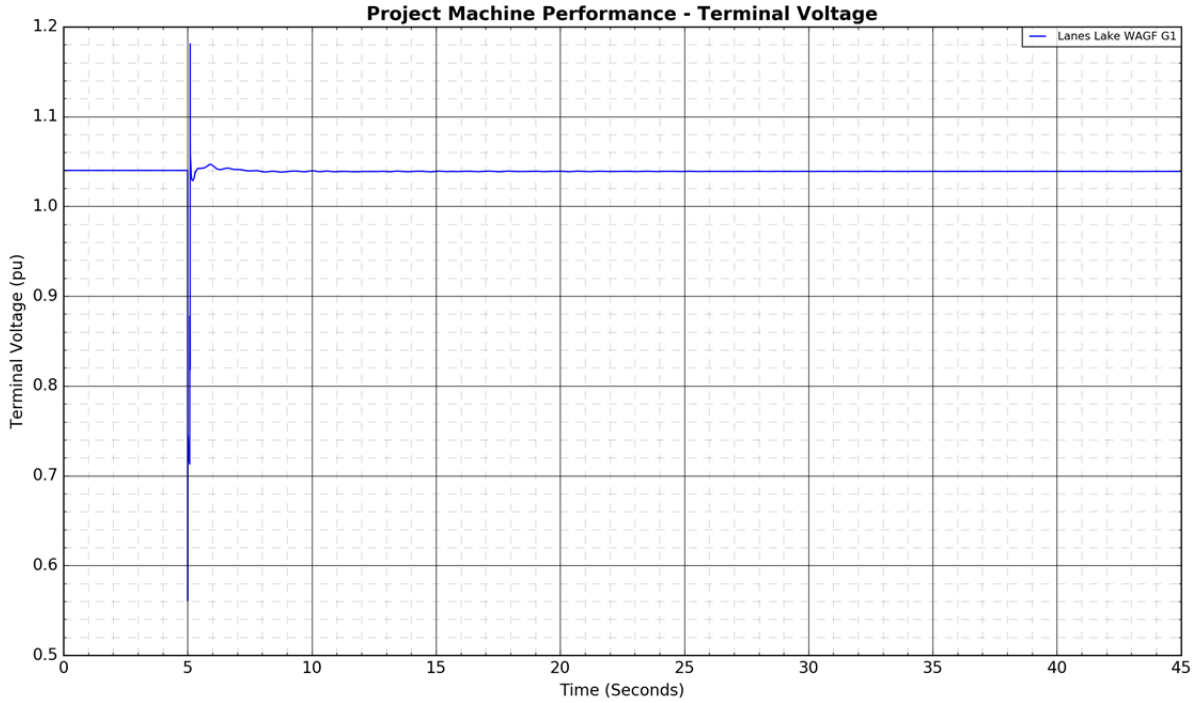
Project Machine Performance - Terminal Voltage
Lanes Lake WAGF G1
Terminal Voltage (pu)
Time (Seconds)


Project Machine Performance - Active Power
Lanes Lake WAGF G1
Active Power (pu)
Time (Seconds)
2.2
2.0
1.8
1.6
1.4
1.2
1.0
0.8
0
5
10
15
20
25
30
35
40
45

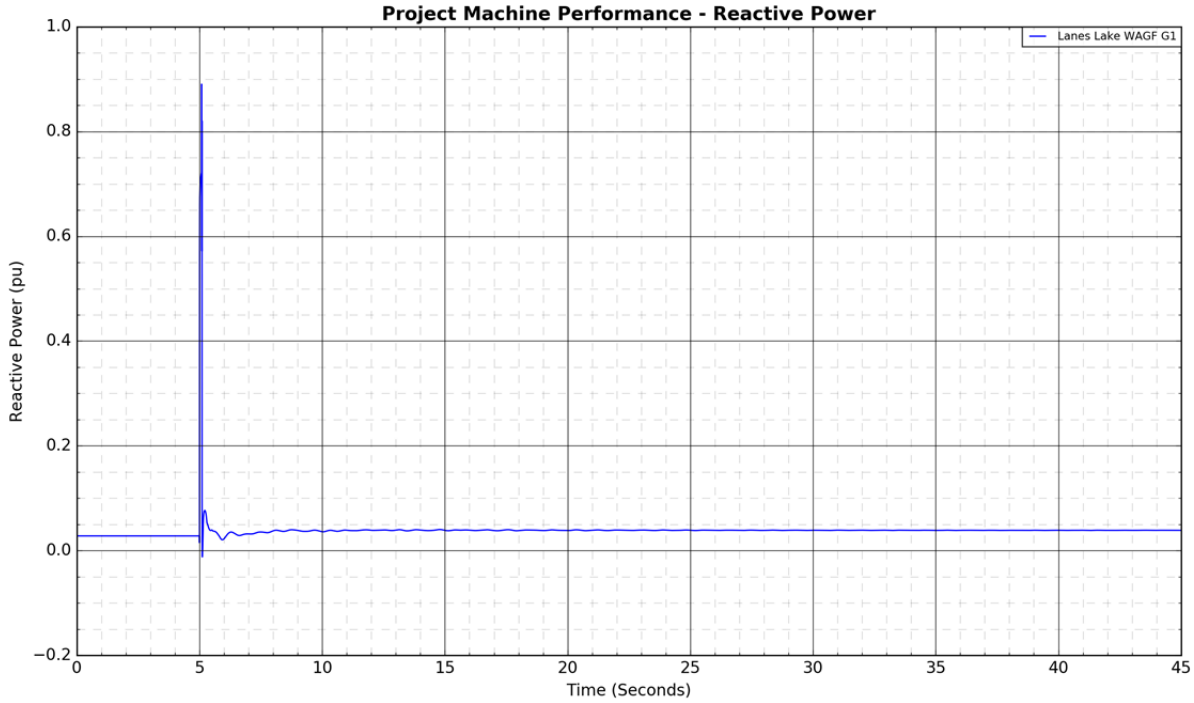
Project Machine Performance - Reactive Power
Lanes Lake WAGF G1
Reactive Power (pu)
Time (Seconds)
1.0
0.8
0.6
0.4
0.2
0.0
−0.2
0
5
10
15
20
25
30
35
40
45

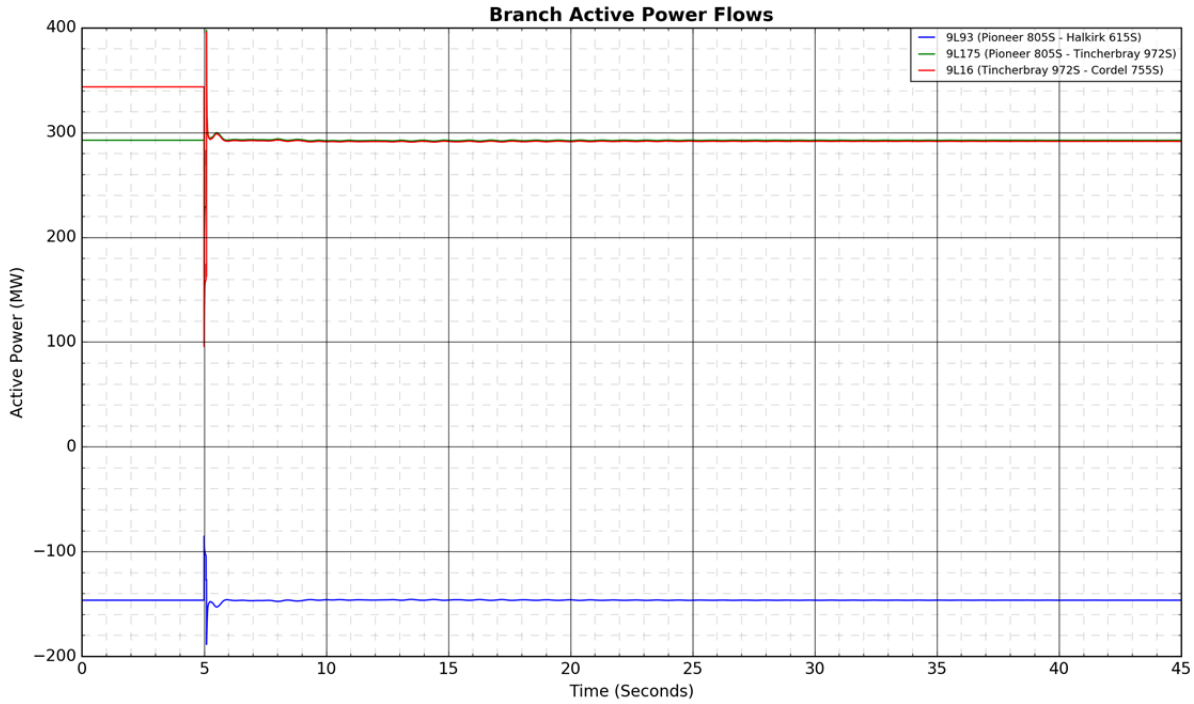
Branch Active Power Flows
9L93 (Pioneer 805S - Halkirk 615S)
9L175 (Pioneer 805S - Tincherbray 972S)
9L16 (Tincherbray 972S - Cordel 755S)
Active Power (MW)
Time (Seconds)

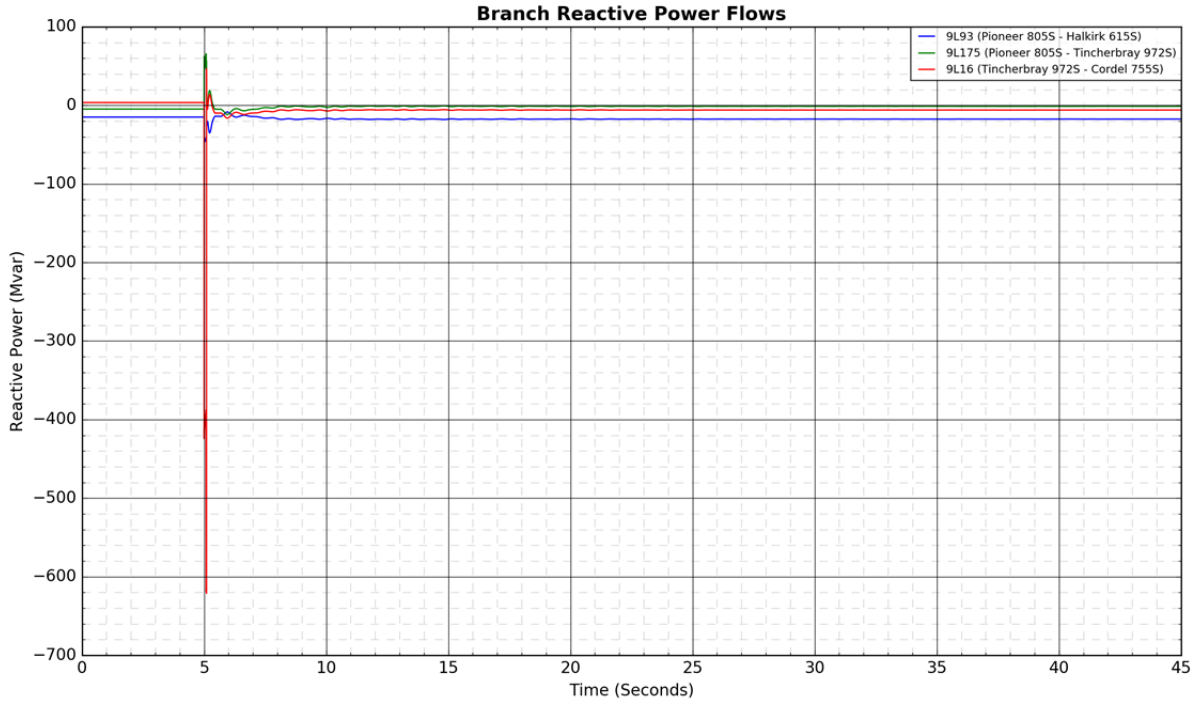
Branch Reactive Power Flows
9L93 (Pioneer 805S - Halkirk 615S)
9L175 (Pioneer 805S - Tincherbray 972S)
9L16 (Tincherbray 972S - Cordel 755S)
Reactive Power (Mvar)
Time (Seconds)

Figure A4-38: 9L59 (Anderson 801S - Tinchebray 972S): 3-phase fault at Tinchebray 972S



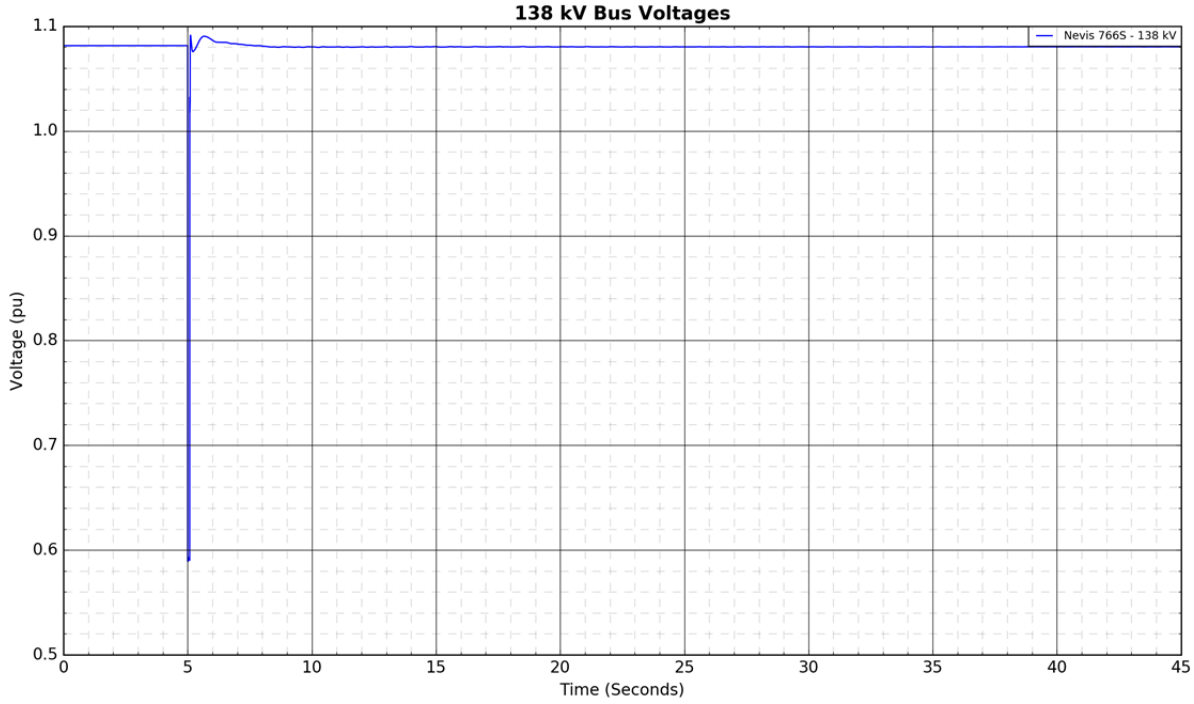

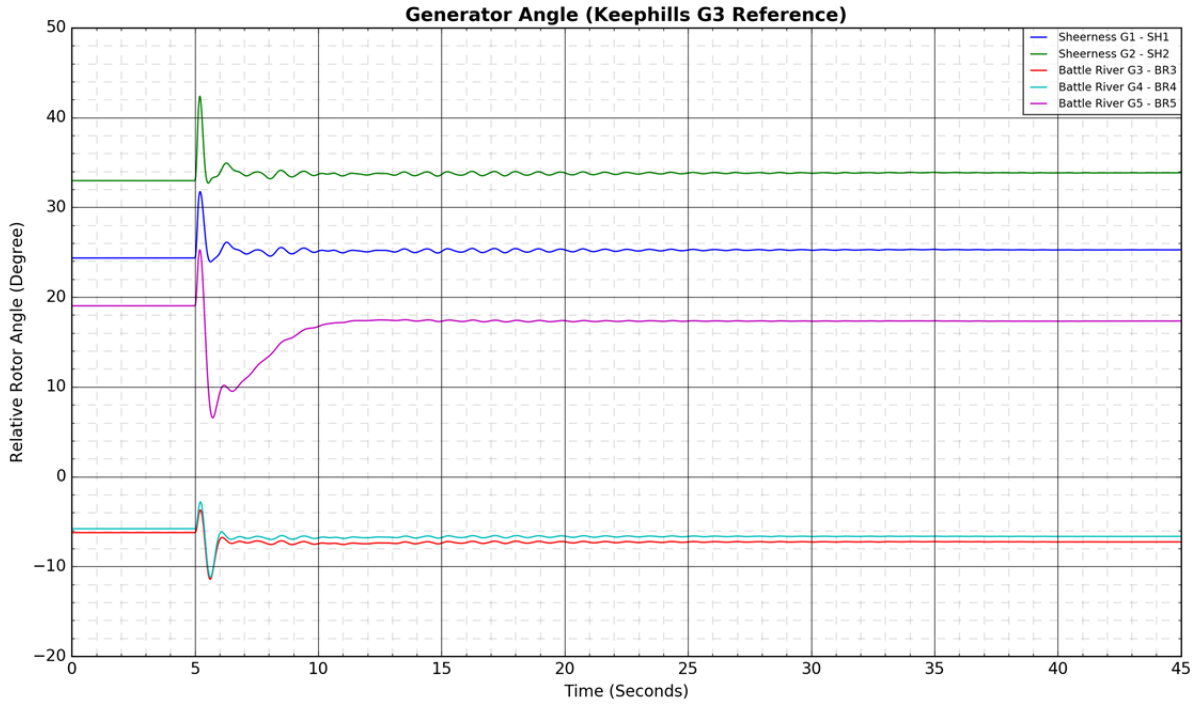
Generator Angle (Keephills G3 Reference)
Relative Rotor Angle (Degree)
Time (Seconds)
Sheerness G1 - SH1
Sheerness G2 - SH2
Battle River G3 - BR3
Battle River G4 - BR4
Battle River G5 - BR5

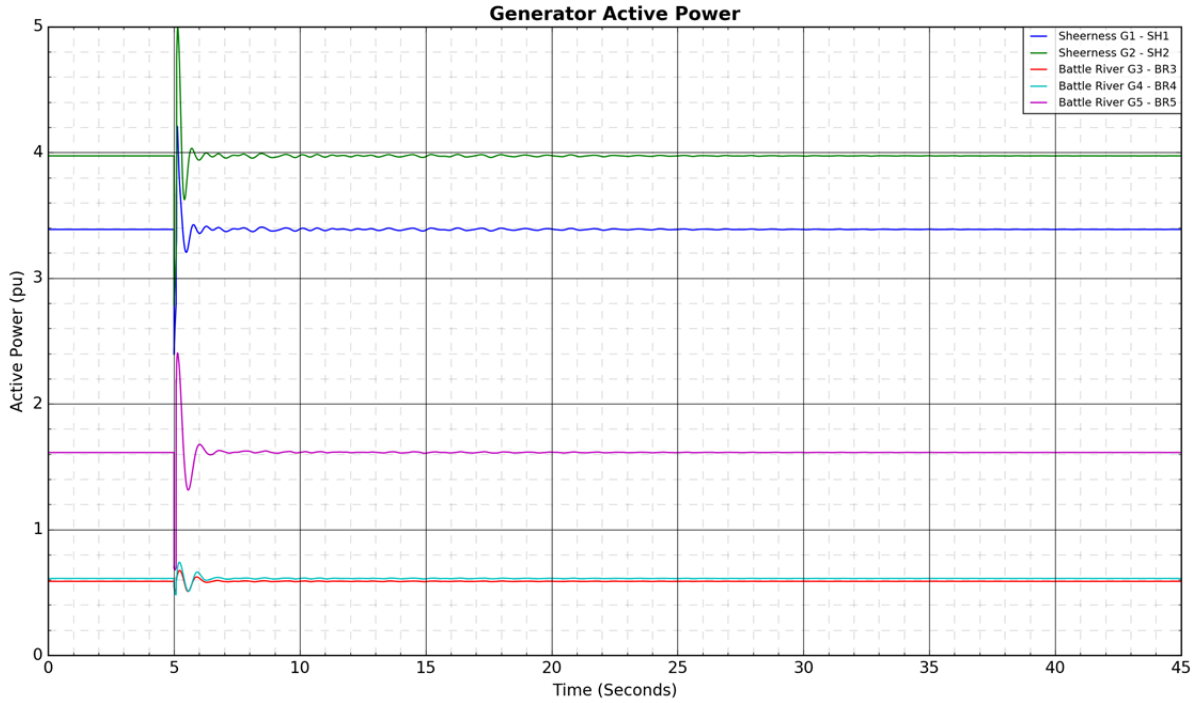
Generator Active Power
Active Power (pu)
Time (Seconds)
Sheerness G1 - SH1
Sheerness G2 - SH2
Battle River G3 - BR3
Battle River G4 - BR4
Battle River G5 - BR5

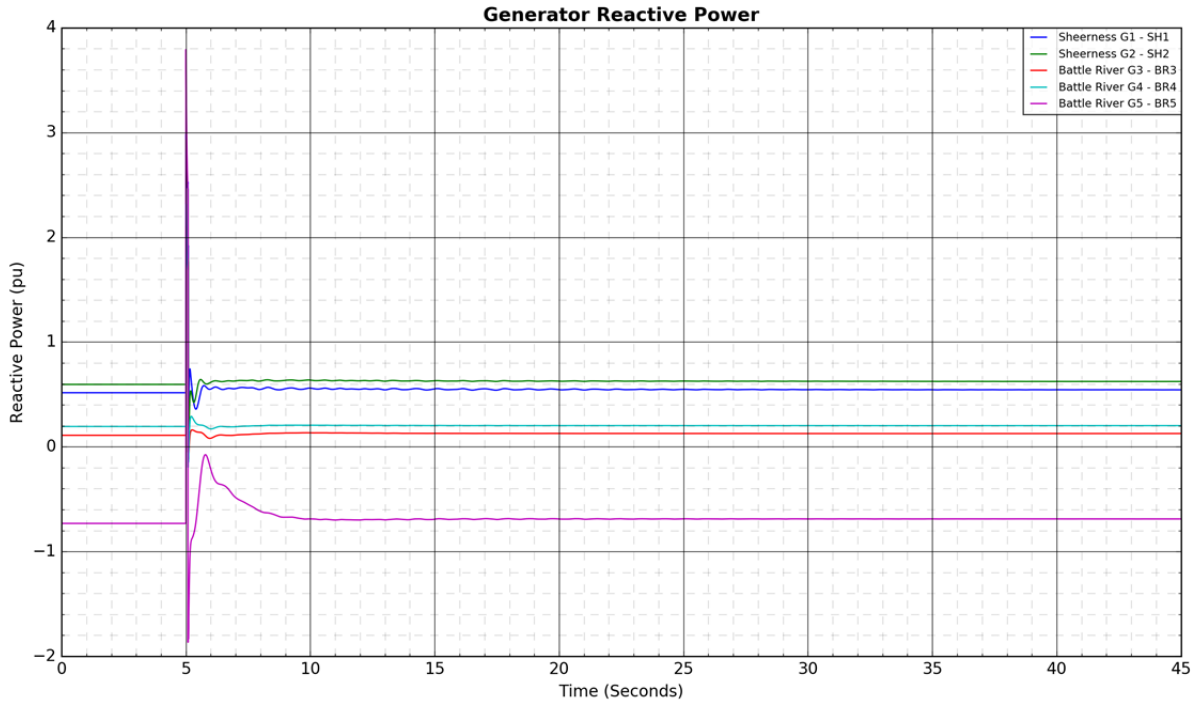
Generator Reactive Power
Sheerness G1 - SH1
Sheerness G2 - SH2
Battle River G3 - BR3
Battle River G4 - BR4
Battle River G5 - BR5
Reactive Power (pu)
Time (Seconds)

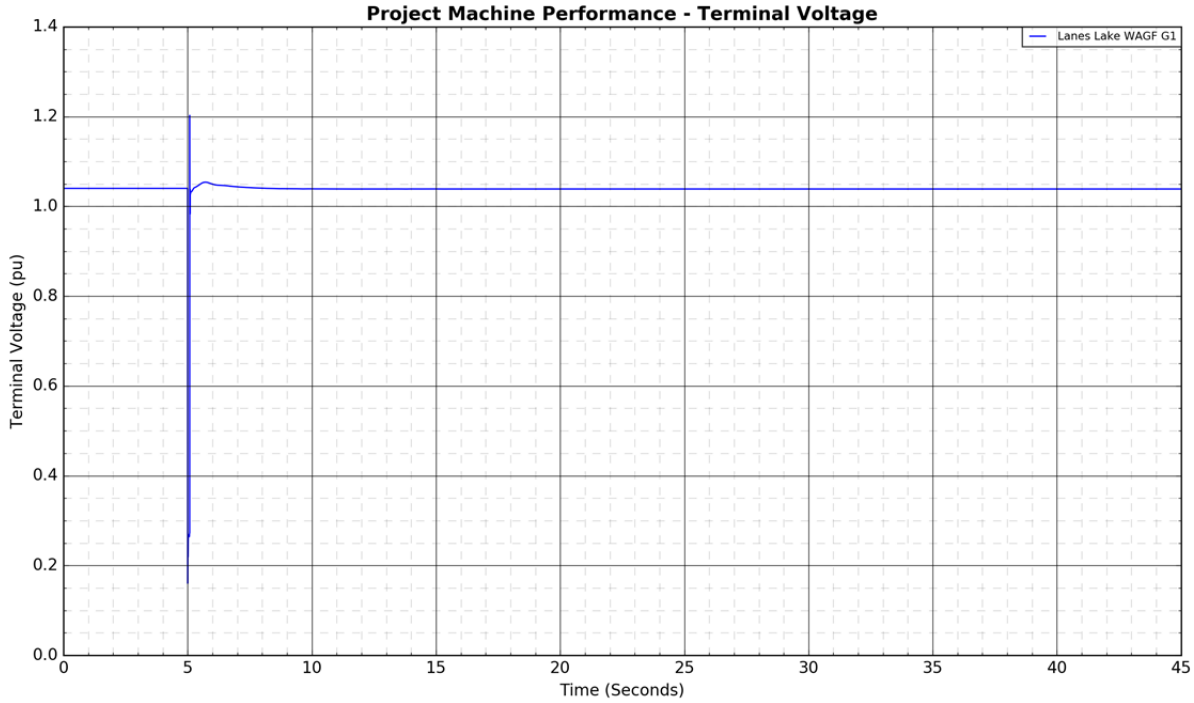
Project Machine Performance - Terminal Voltage
Lanes Lake WAGF G1
Terminal Voltage (pu)
Time (Seconds)

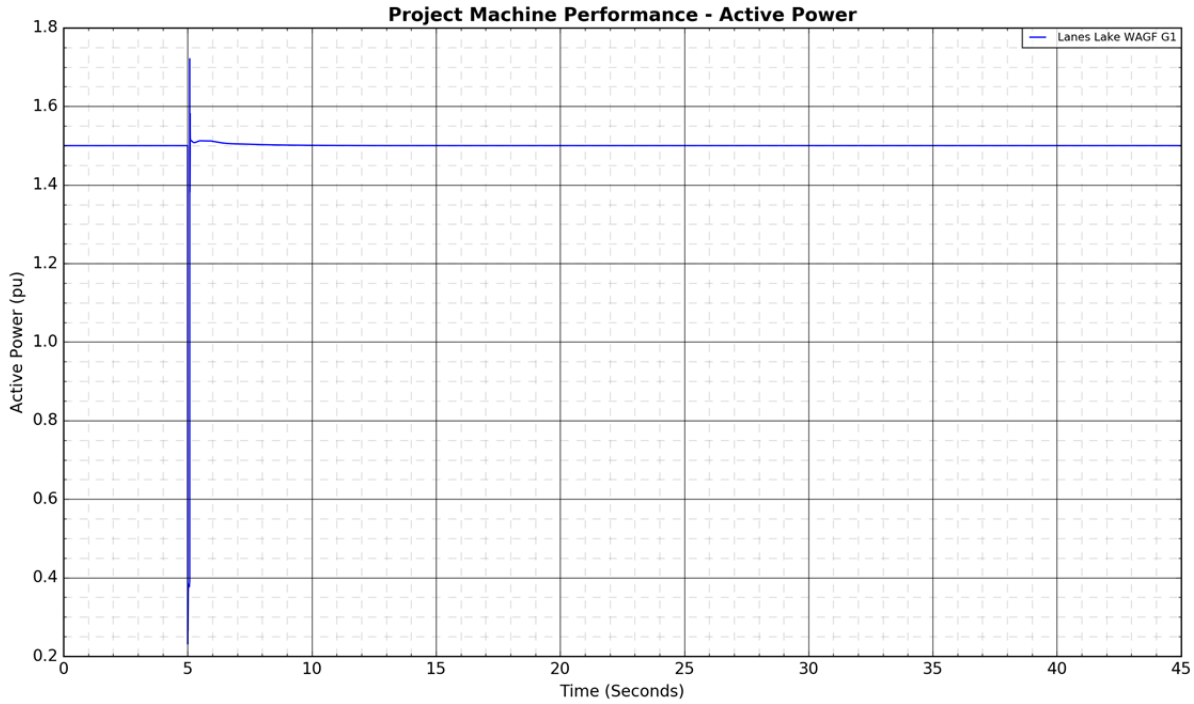
Project Machine Performance - Active Power
Lanes Lake WAGF G1
Active Power (pu)
Time (Seconds)
1.8
1.6
1.4
1.2
1.0
0.8
0.6
0.4
0.2
0
5
10
15
20
25
30
35
40
45

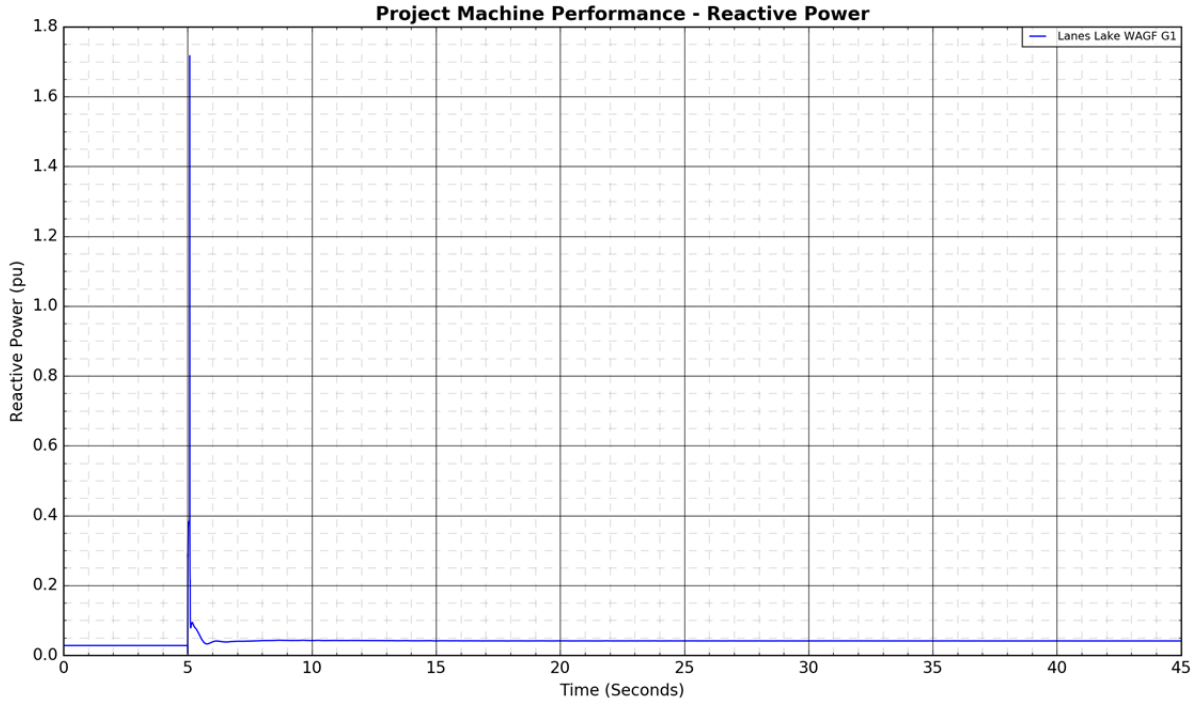
Project Machine Performance - Reactive Power
Lanes Lake WAGF G1
Reactive Power (pu)
Time (Seconds)
1.8
1.6
1.4
1.2
1.0
0.8
0.6
0.4
0.2
0.0
0
5
10
15
20
25
30
35
40
45

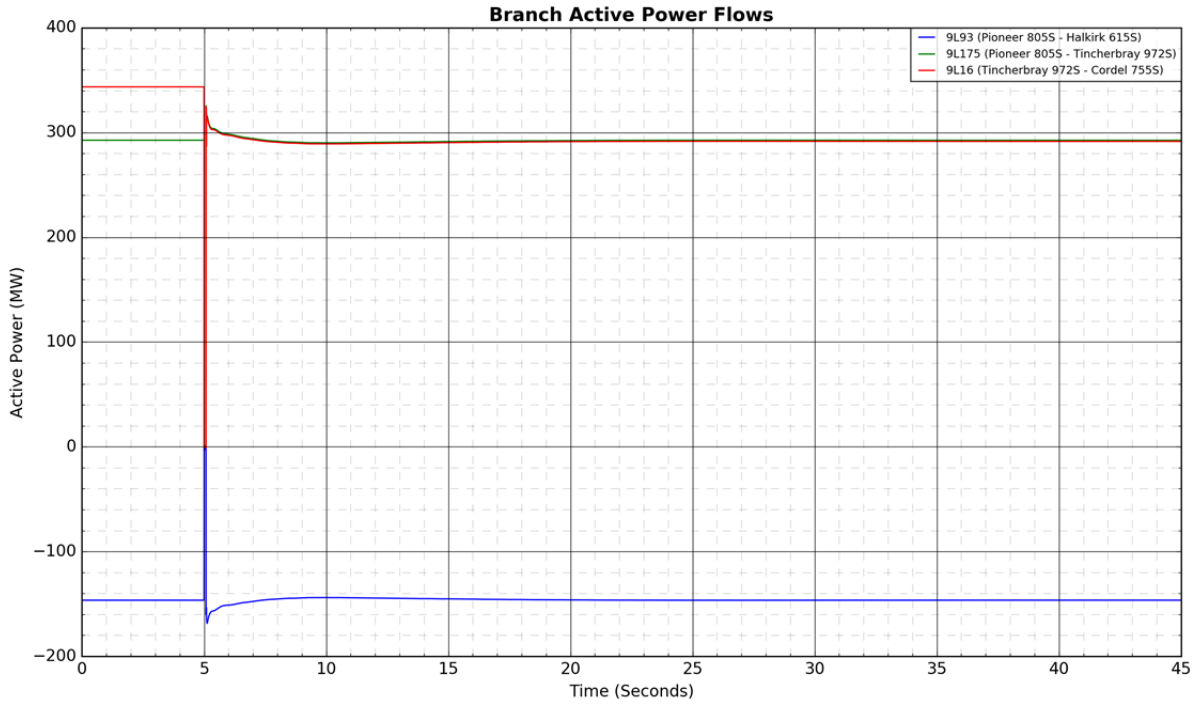
Branch Active Power Flows
9L93 (Pioneer 805S - Halkirk 615S)
9L175 (Pioneer 805S - Tincherbray 972S)
9L16 (Tincherbray 972S - Cordel 755S)
Active Power (MW)
Time (Seconds)

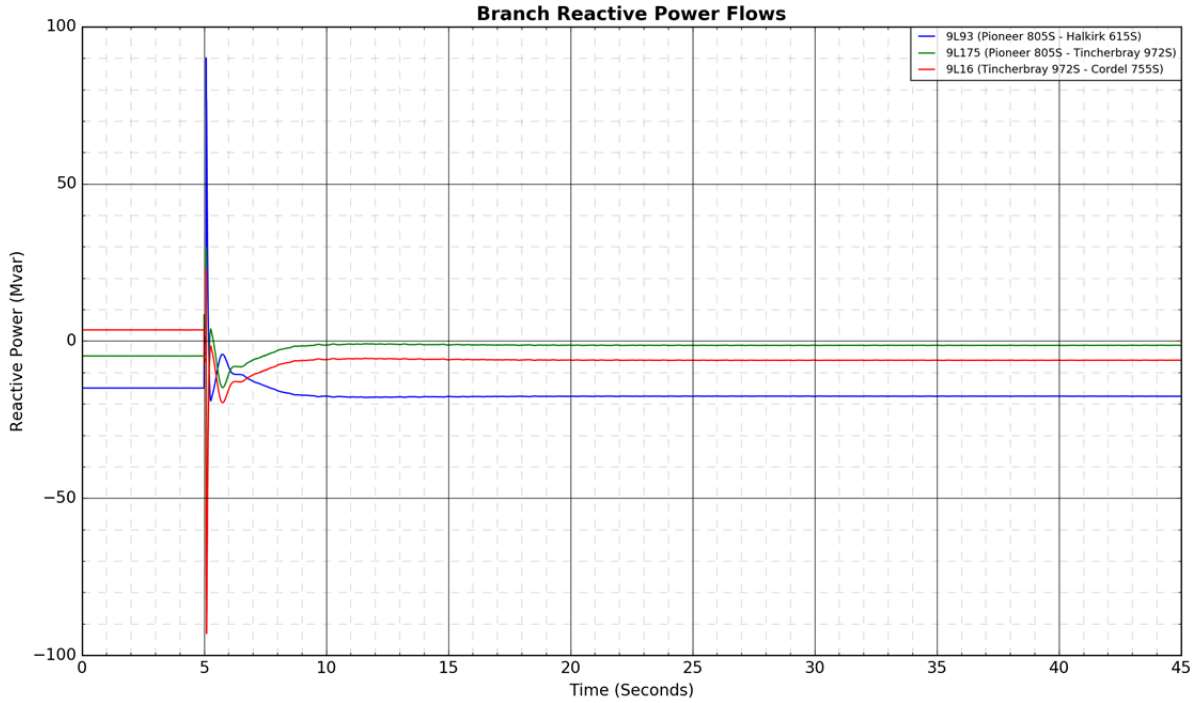
Branch Reactive Power Flows
9L93 (Pioneer 805S - Halkirk 615S)
9L175 (Pioneer 805S - Tincherbray 972S)
9L16 (Tincherbray 972S - Cordel 755S)
Reactive Power (Mvar)
Time (Seconds)

Figure A4-39: 9L966 (Pemukan 932S - Hansman Lake 650S): 3-phase fault at Pemukan 932S

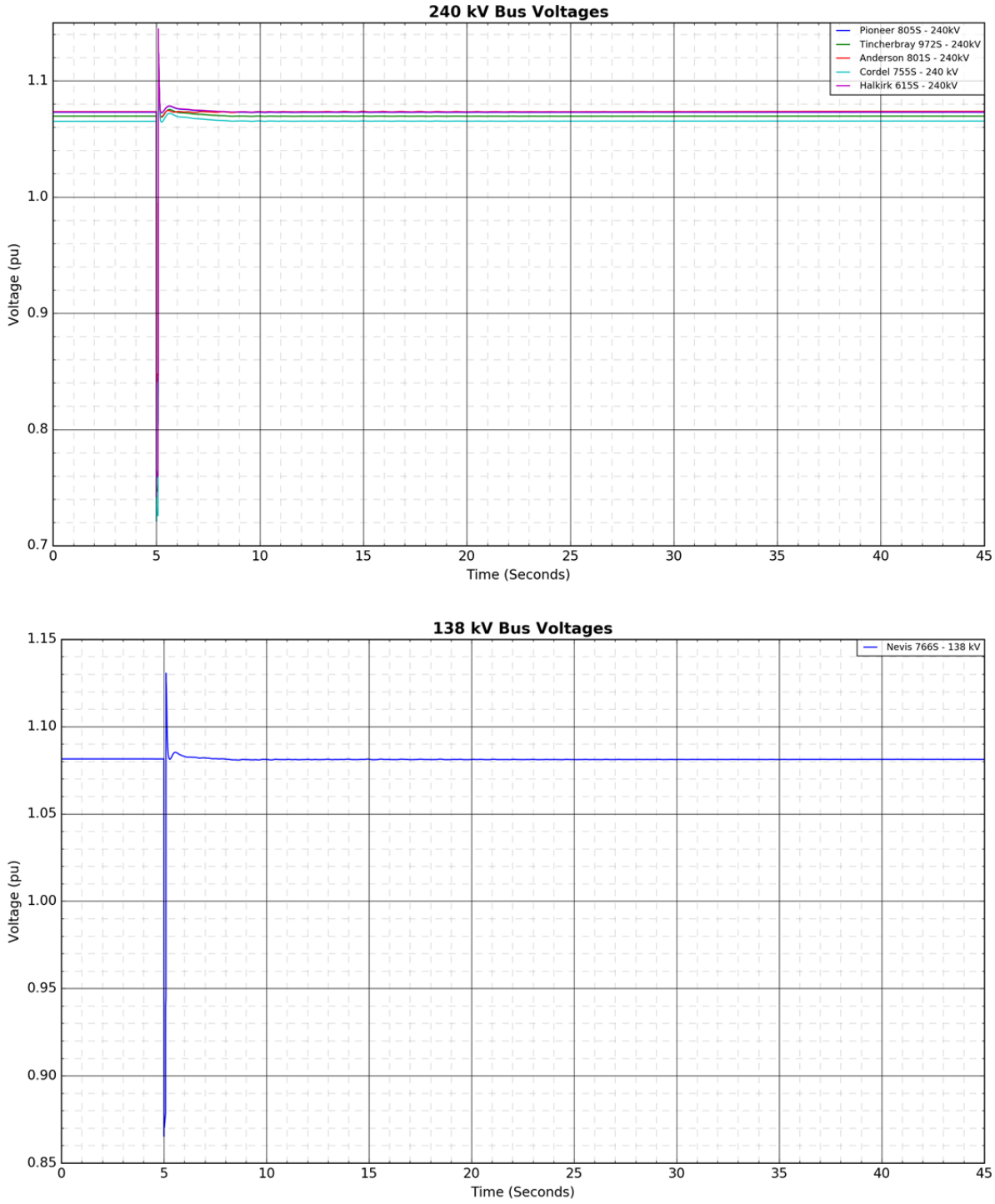

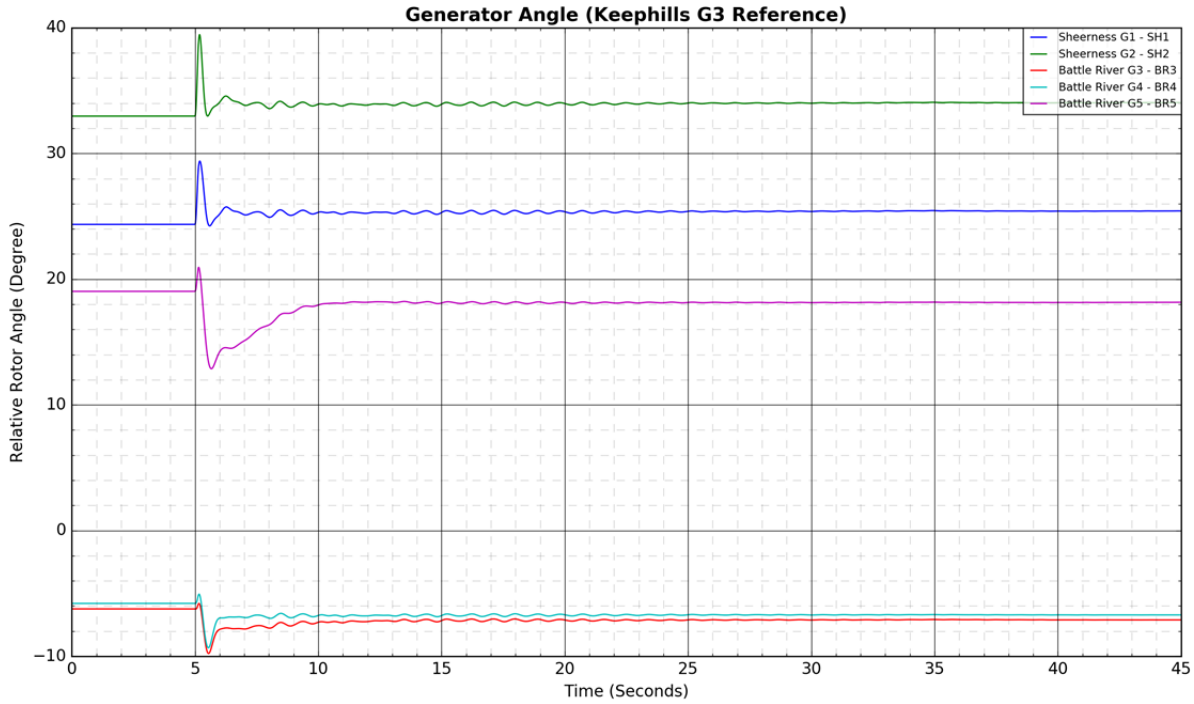
Generator Angle (Keephills G3 Reference)
Relative Rotor Angle (Degree)
Time (Seconds)
Sheerness G1 - SH1
Sheerness G2 - SH2
Battle River G3 - BR3
Battle River G4 - BR4
Battle River G5 - BR5

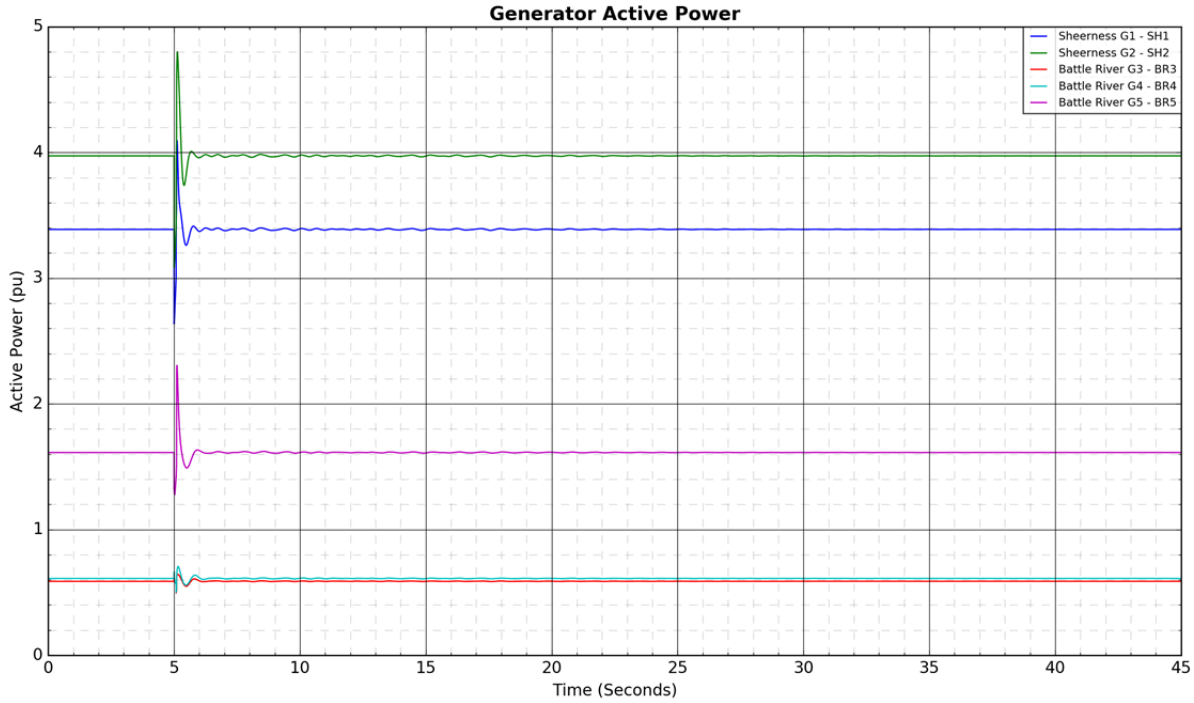
Generator Active Power
Active Power (pu)
Time (Seconds)
Sheerness G1 - SH1
Sheerness G2 - SH2
Battle River G3 - BR3
Battle River G4 - BR4
Battle River G5 - BR5

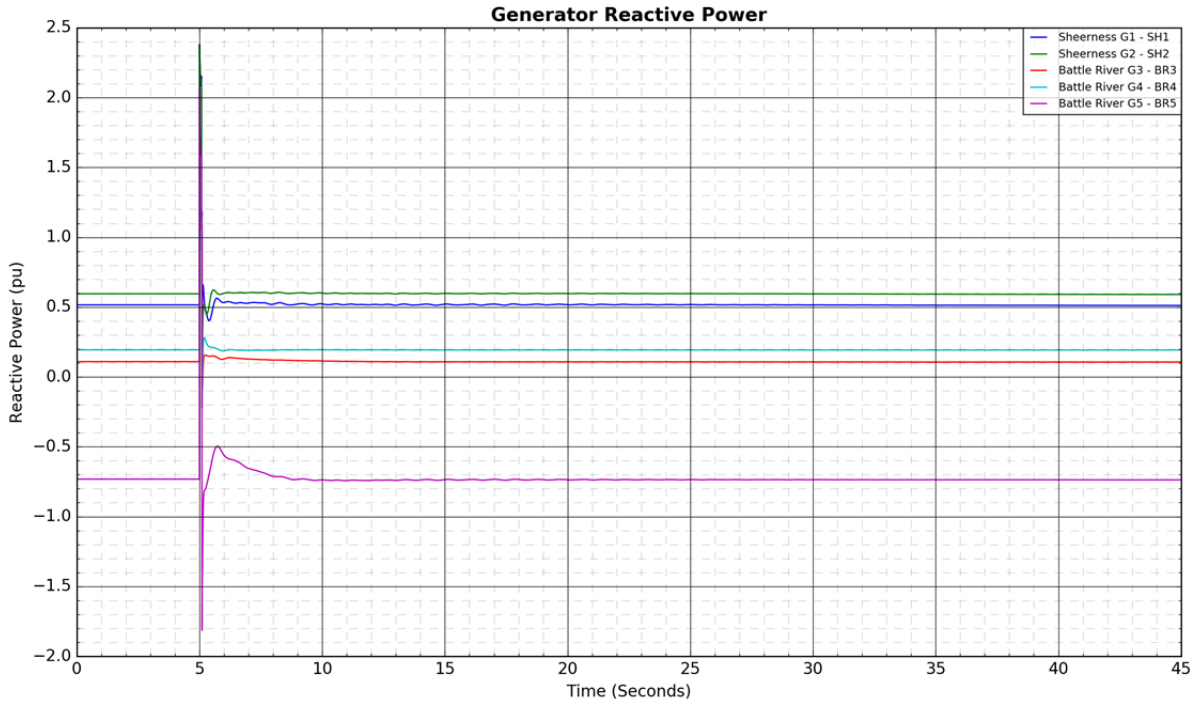
Generator Reactive Power
Sheerness G1 - SH1
Sheerness G2 - SH2
Battle River G3 - BR3
Battle River G4 - BR4
Battle River G5 - BR5
Reactive Power (pu)
Time (Seconds)

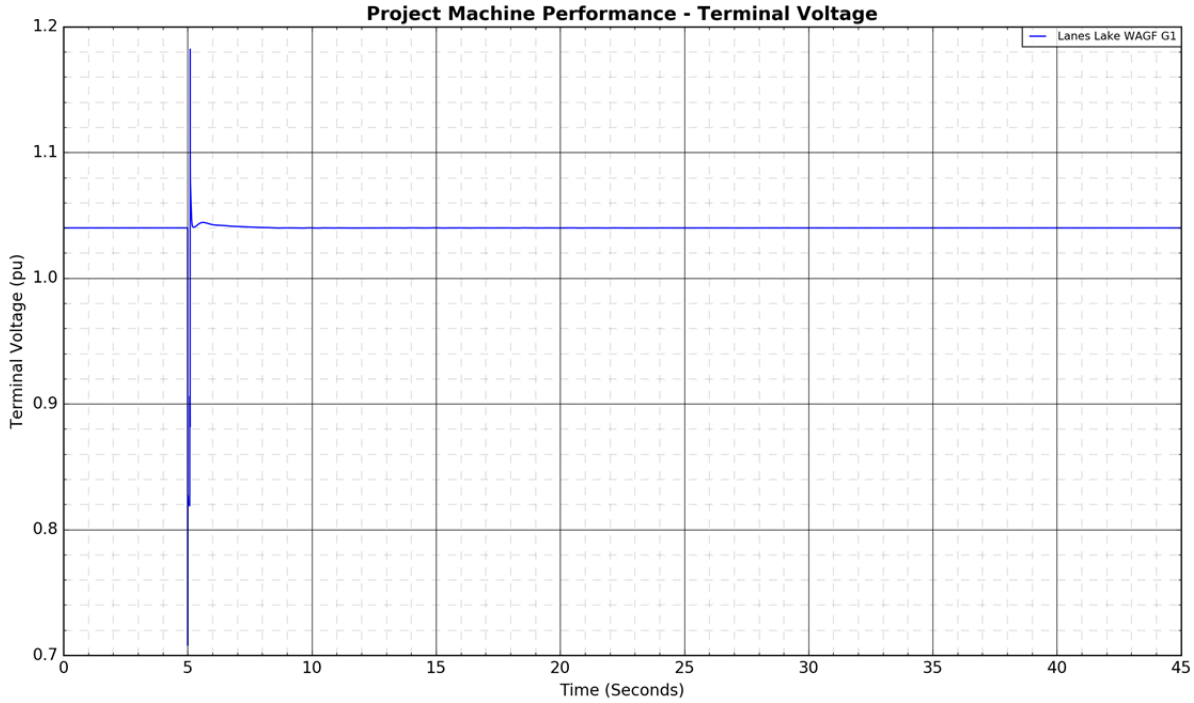
Project Machine Performance - Terminal Voltage
Lanes Lake WAGF G1
Terminal Voltage (pu)
Time (Seconds)


Project Machine Performance - Active Power
Lanes Lake WAGF G1
Active Power (pu)
Time (Seconds)
2.2
2.0
1.8
1.6
1.4
1.2
1.0
0
5
10
15
20
25
30
35
40
45

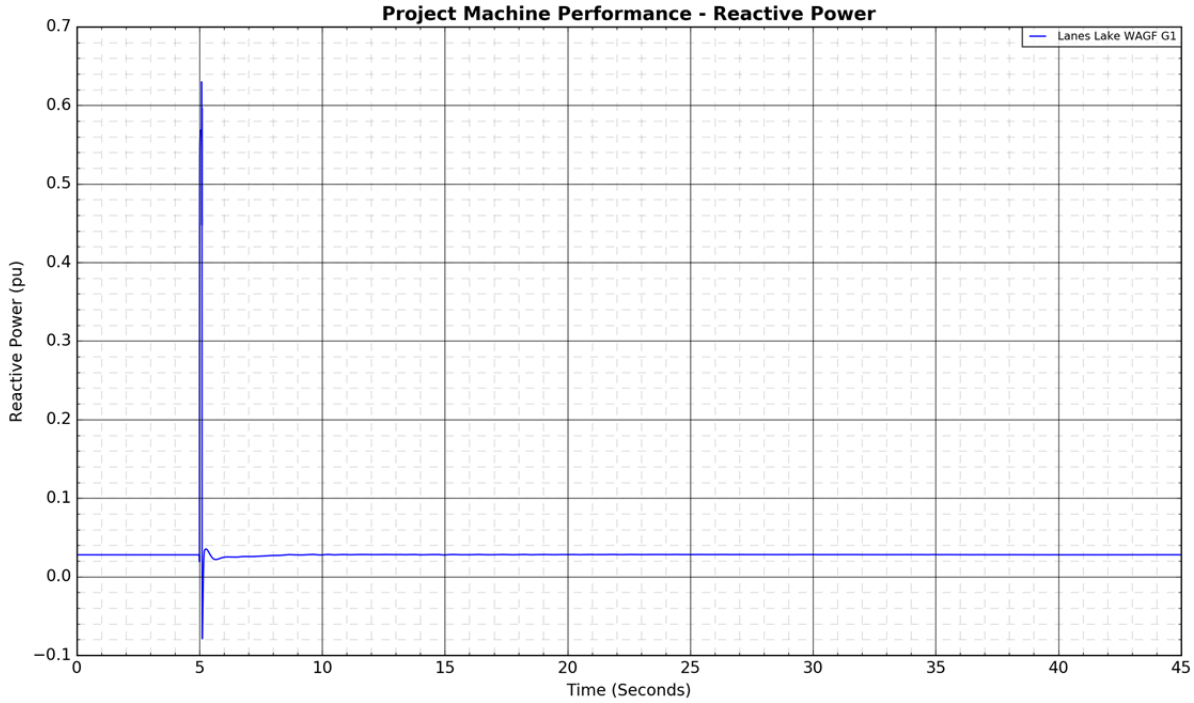
Project Machine Performance - Reactive Power
Lanes Lake WAGF G1
Reactive Power (pu)
Time (Seconds)
0.7
0.6
0.5
0.4
0.3
0.2
0.1
0.0
−0.1
0
5
10
15
20
25
30
35
40
45


Branch Active Power Flows
9L93 (Pioneer 805S - Halkirk 615S)
9L175 (Pioneer 805S - Tincherbray 972S)
9L16 (Tincherbray 972S - Cordel 755S)
9L59 (Anderson 801S - Tinchebray 972S)
Active Power (MW)
Time (Seconds)

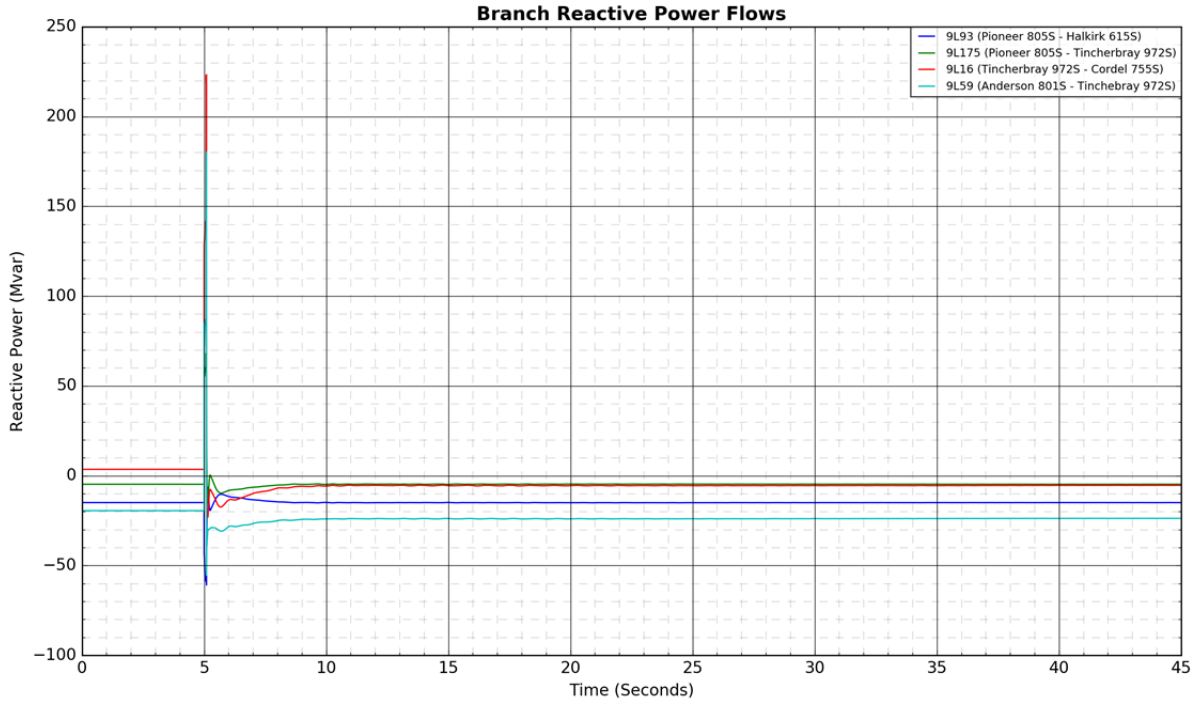
Branch Reactive Power Flows
9L93 (Pioneer 805S - Halkirk 615S)
9L175 (Pioneer 805S - Tincherbray 972S)
9L16 (Tincherbray 972S - Cordel 755S)
9L59 (Anderson 801S - Tinchebray 972S)
Reactive Power (Mvar)
Time (Seconds)

Figure A4-40: 9L966 (Pemukan 932S - Hansman Lake 650S): 3-phase fault at Hansman Lake 650S



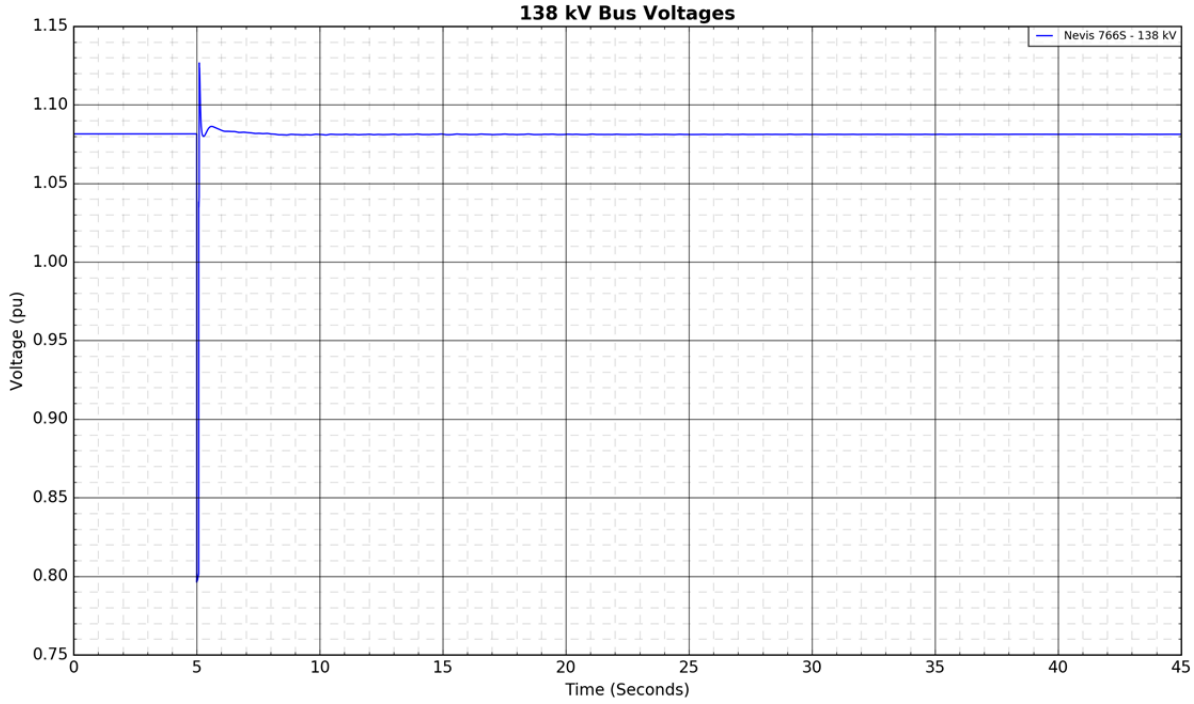

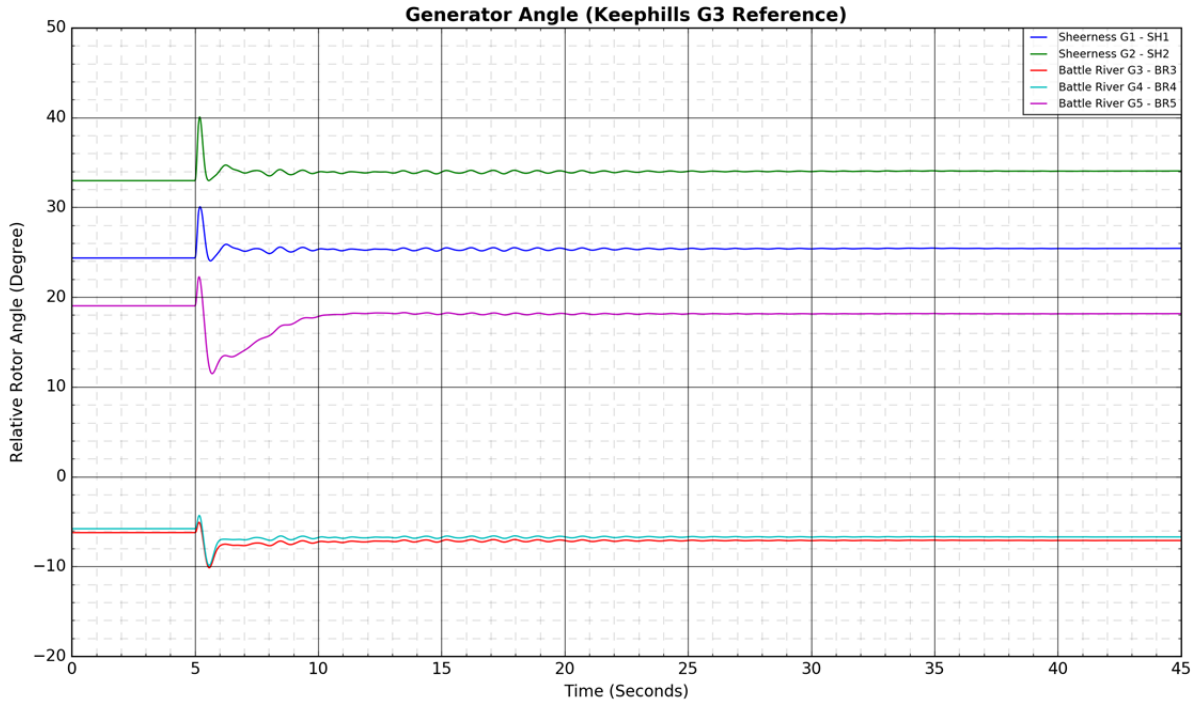
Generator Angle (Keephills G3 Reference)
Sheerness G1 - SH1
Sheerness G2 - SH2
Battle River G3 - BR3
Battle River G4 - BR4
Battle River G5 - BR5
Relative Rotor Angle (Degree)
Time (Seconds)

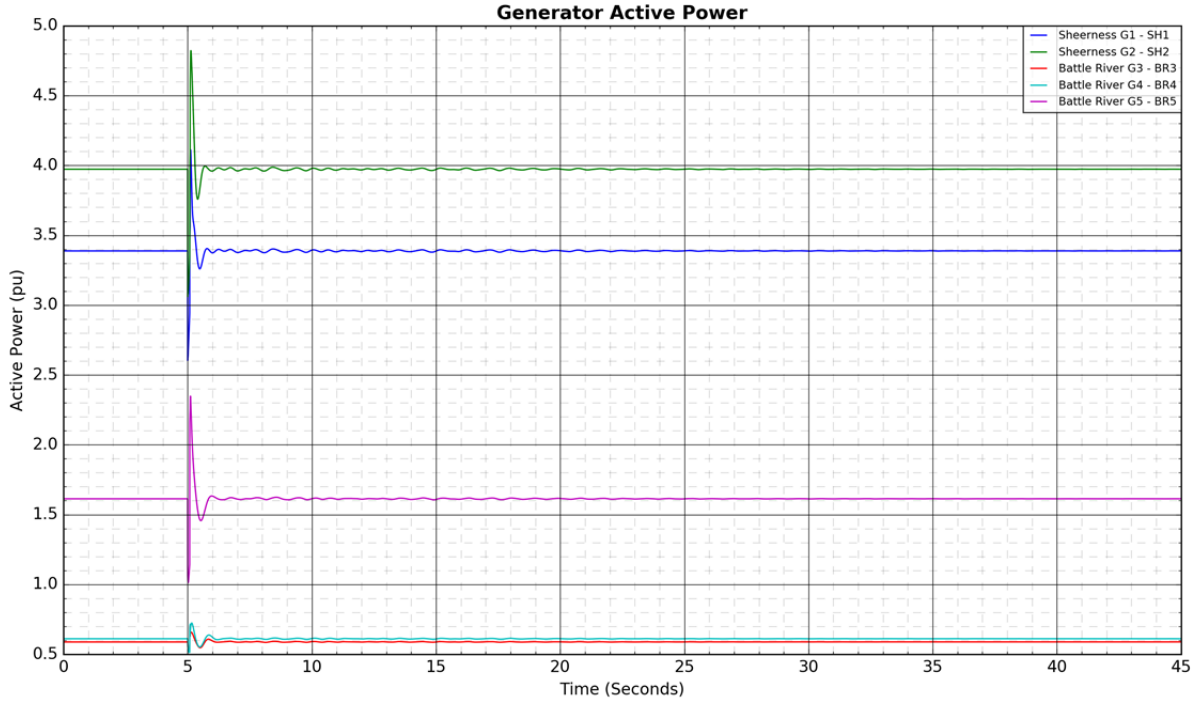
Generator Active Power
Sheerness G1 - SH1
Sheerness G2 - SH2
Battle River G3 - BR3
Battle River G4 - BR4
Battle River G5 - BR5
Active Power (pu)
Time (Seconds)

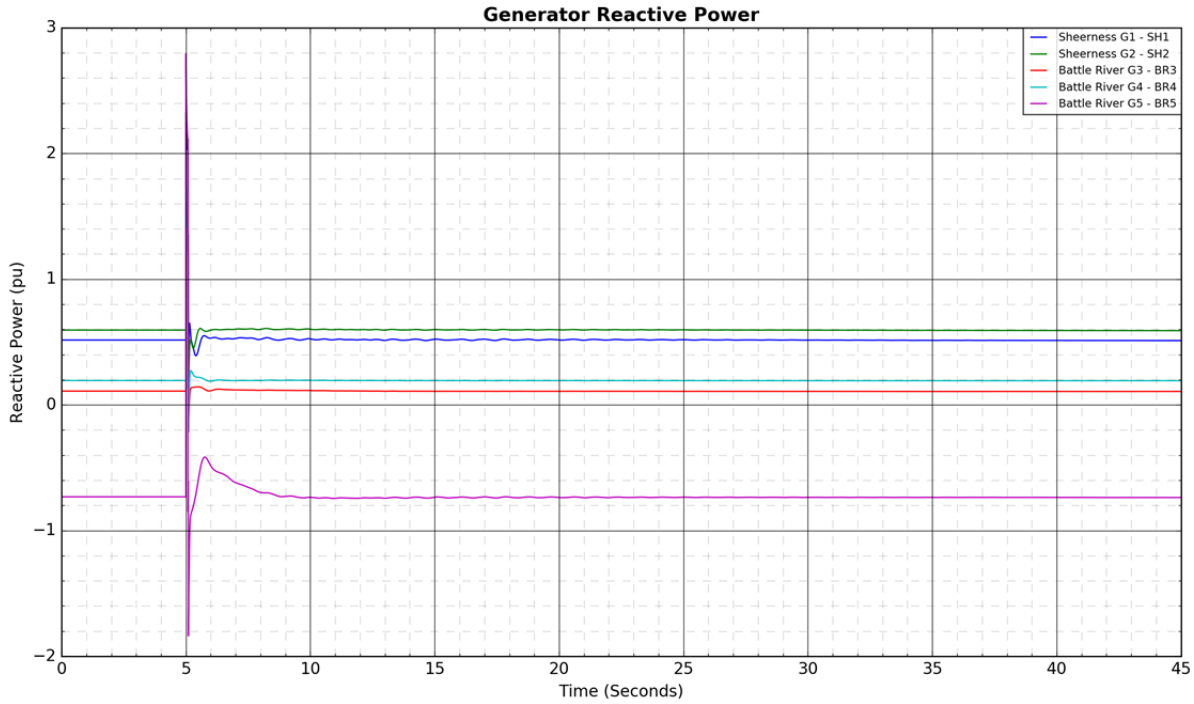
Generator Reactive Power
Sheerness G1 - SH1
Sheerness G2 - SH2
Battle River G3 - BR3
Battle River G4 - BR4
Battle River G5 - BR5
Reactive Power (pu)
Time (Seconds)
3
2
1
0
−1
−2
0
5
10
15
20
25
30
35
40
45

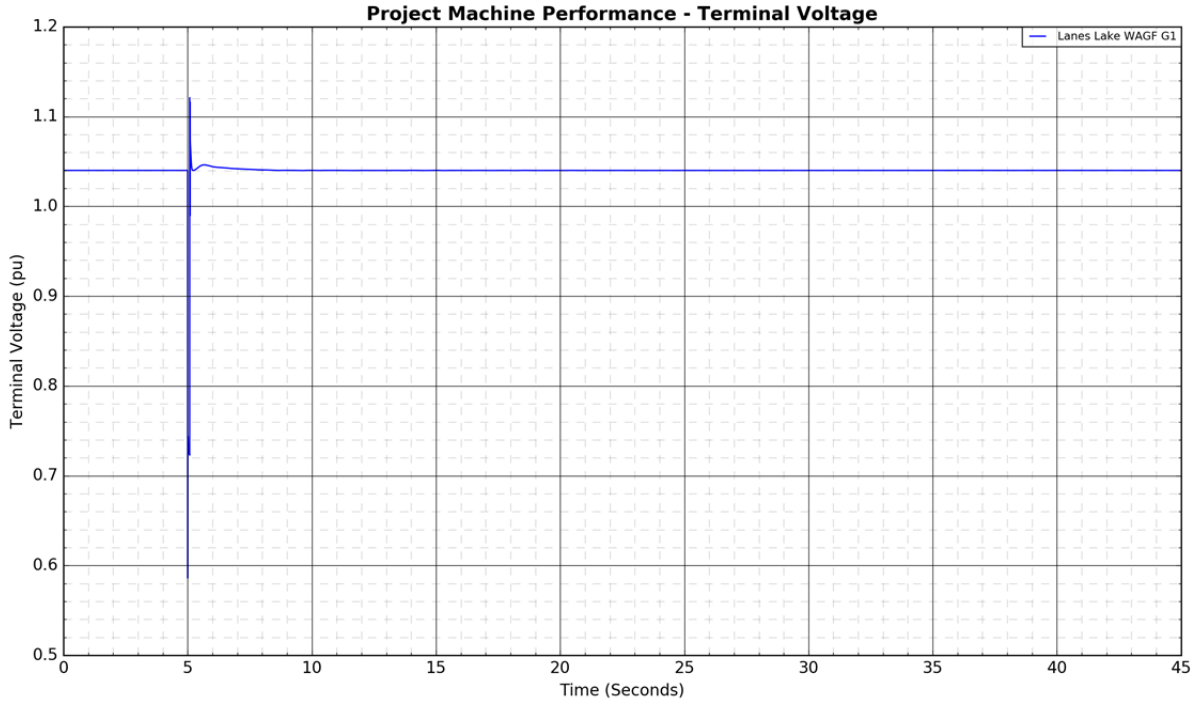
Project Machine Performance - Terminal Voltage
Lanes Lake WAGF G1
Terminal Voltage (pu)
Time (Seconds)
1.2
1.1
1.0
0.9
0.8
0.7
0.6
0.5
0
5
10
15
20
25
30
35
40
45


Project Machine Performance - Active Power
Lanes Lake WAGF G1
Active Power (pu)
Time (Seconds)
2.2
2.0
1.8
1.6
1.4
1.2
1.0
0.8
0
5
10
15
20
25
30
35
40
45

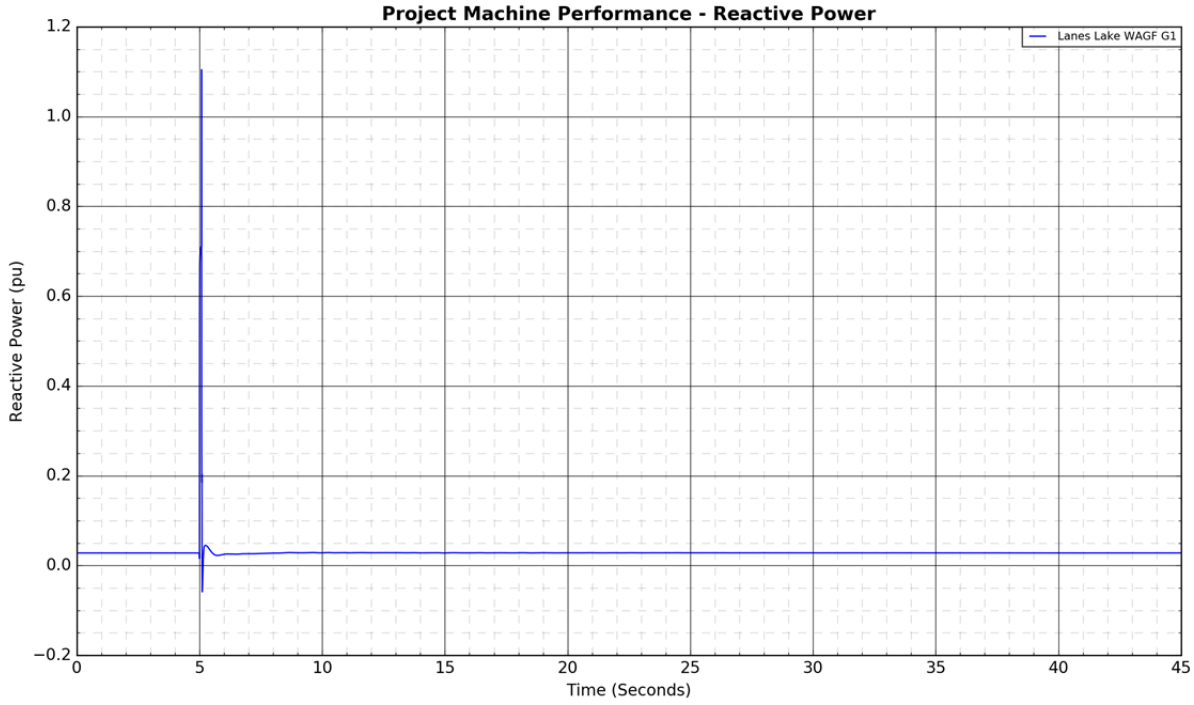
Project Machine Performance - Reactive Power
Lanes Lake WAGF G1
Reactive Power (pu)
Time (Seconds)
1.2
1.0
0.8
0.6
0.4
0.2
0.0
−0.2
0
5
10
15
20
25
30
35
40
45


Branch Active Power Flows
9L93 (Pioneer 805S - Halkirk 615S)
9L175 (Pioneer 805S - Tincherbray 972S)
9L16 (Tincherbray 972S - Cordel 755S)
9L59 (Anderson 801S - Tinchebray 972S)
Active Power (MW)
Time (Seconds)

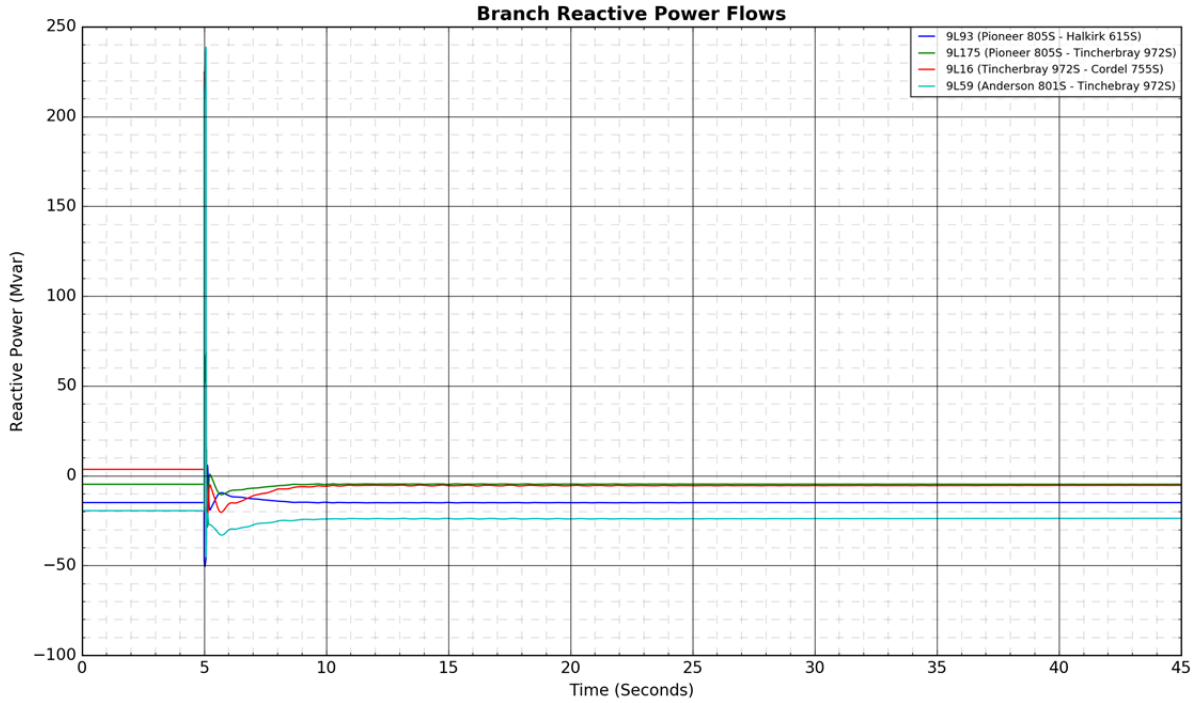
Branch Reactive Power Flows
9L93 (Pioneer 805S - Halkirk 615S)
9L175 (Pioneer 805S - Tincherbray 972S)
9L16 (Tincherbray 972S - Cordel 755S)
9L59 (Anderson 801S - Tinchebray 972S)
Reactive Power (Mvar)
Time (Seconds)

Figure A4-41: 912L\9L912 (Nevis 766S - Red Deer 63S): 3-phase fault at Nevis 766S

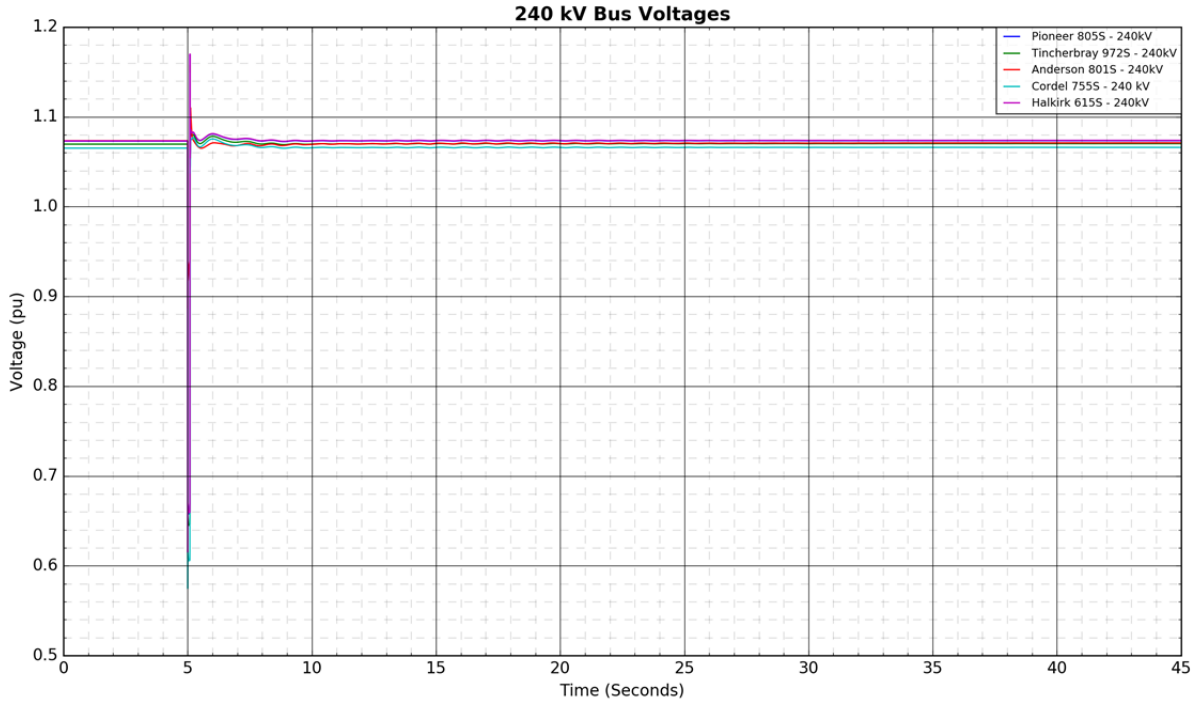

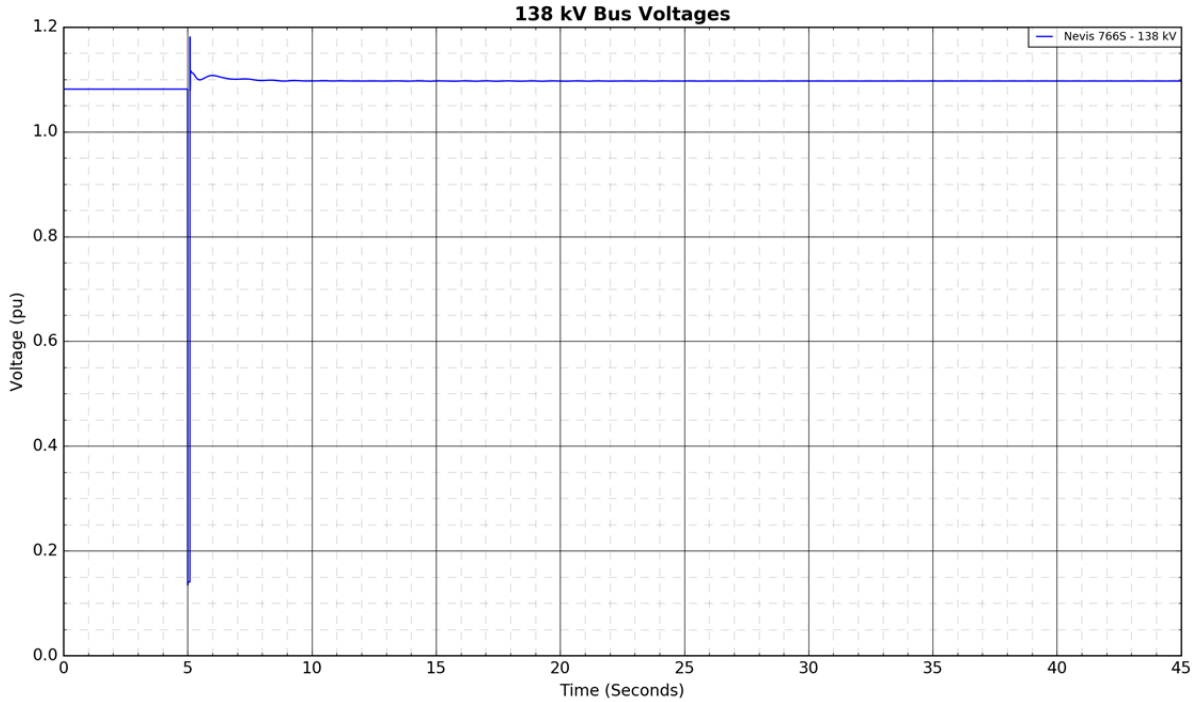

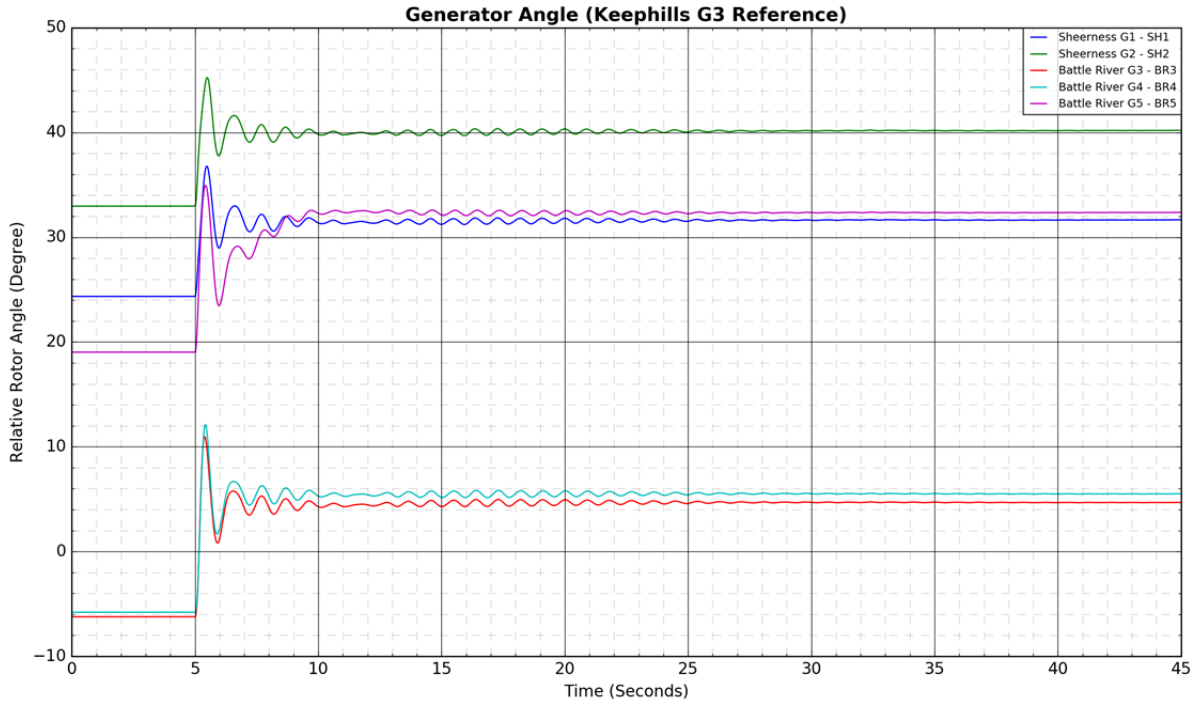
Generator Angle (Keephills G3 Reference)
Relative Rotor Angle (Degree)
Time (Seconds)
Sheerness G1 - SH1
Sheerness G2 - SH2
Battle River G3 - BR3
Battle River G4 - BR4
Battle River G5 - BR5

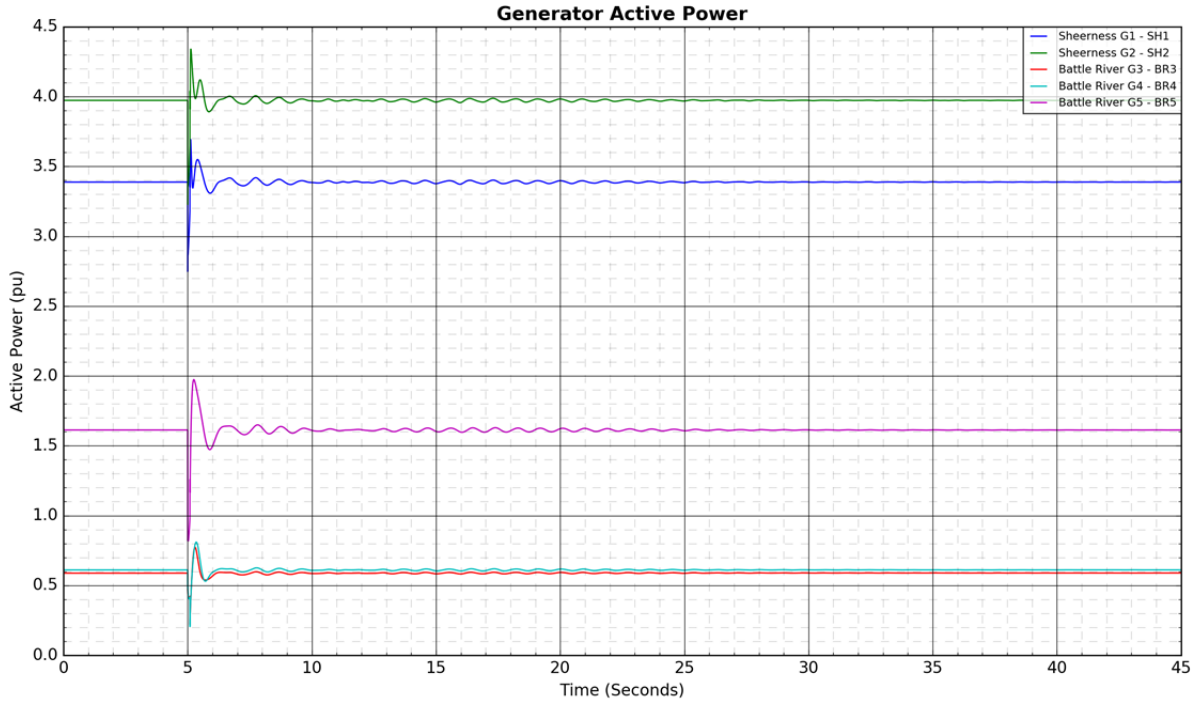
Generator Active Power
Active Power (pu)
Time (Seconds)
Sheerness G1 - SH1
Sheerness G2 - SH2
Battle River G3 - BR3
Battle River G4 - BR4
Battle River G5 - BR5

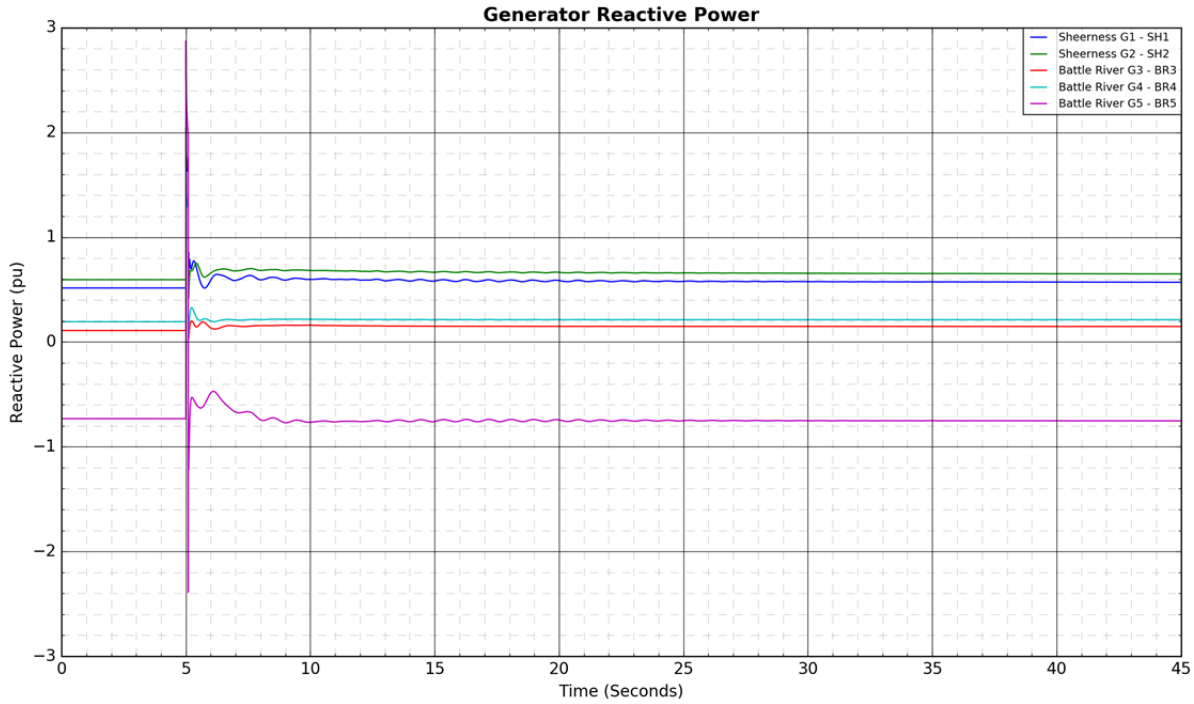
Generator Reactive Power
Sheerness G1 - SH1
Sheerness G2 - SH2
Battle River G3 - BR3
Battle River G4 - BR4
Battle River G5 - BR5
Reactive Power (pu)
Time (Seconds)

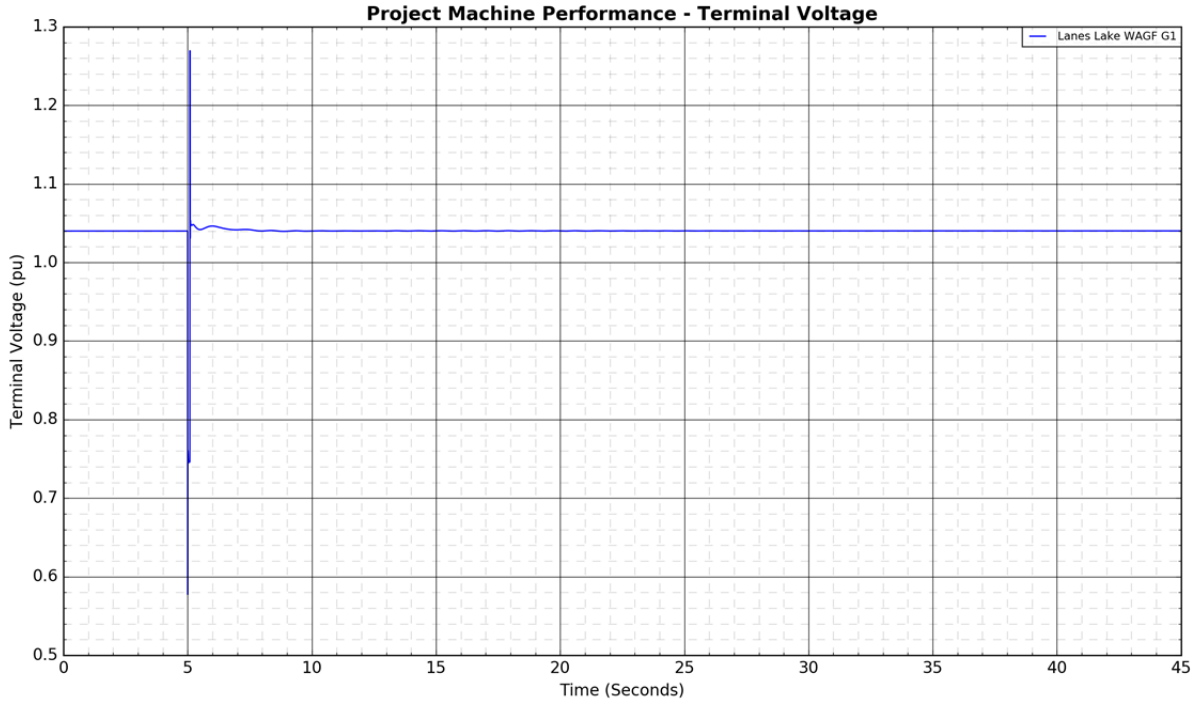
Project Machine Performance - Terminal Voltage
Lanes Lake WAGF G1
Terminal Voltage (pu)
Time (Seconds)


Project Machine Performance - Active Power
Lanes Lake WAGF G1
Active Power (pu)
Time (Seconds)
2.6
2.4
2.2
2.0
1.8
1.6
1.4
1.2
1.0
0.8
0
5
10
15
20
25
30
35
40
45

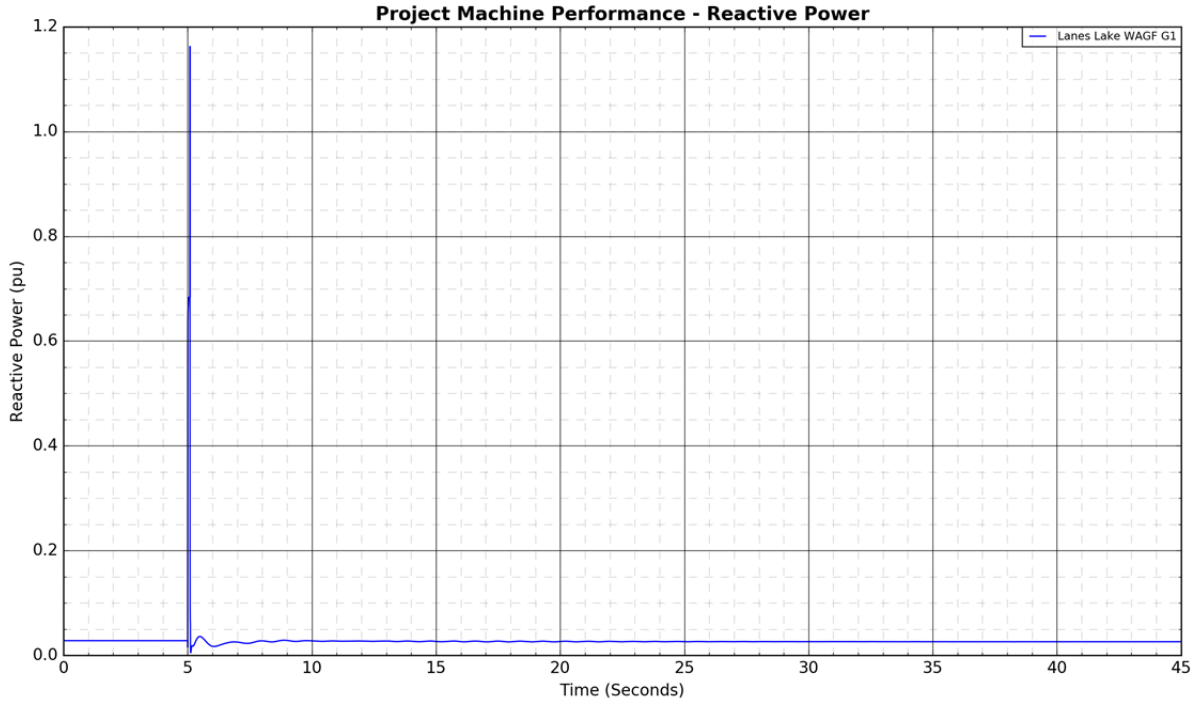
Project Machine Performance - Reactive Power
Lanes Lake WAGF G1
Reactive Power (pu)
Time (Seconds)
1.2
1.0
0.8
0.6
0.4
0.2
0.0
0
5
10
15
20
25
30
35
40
45

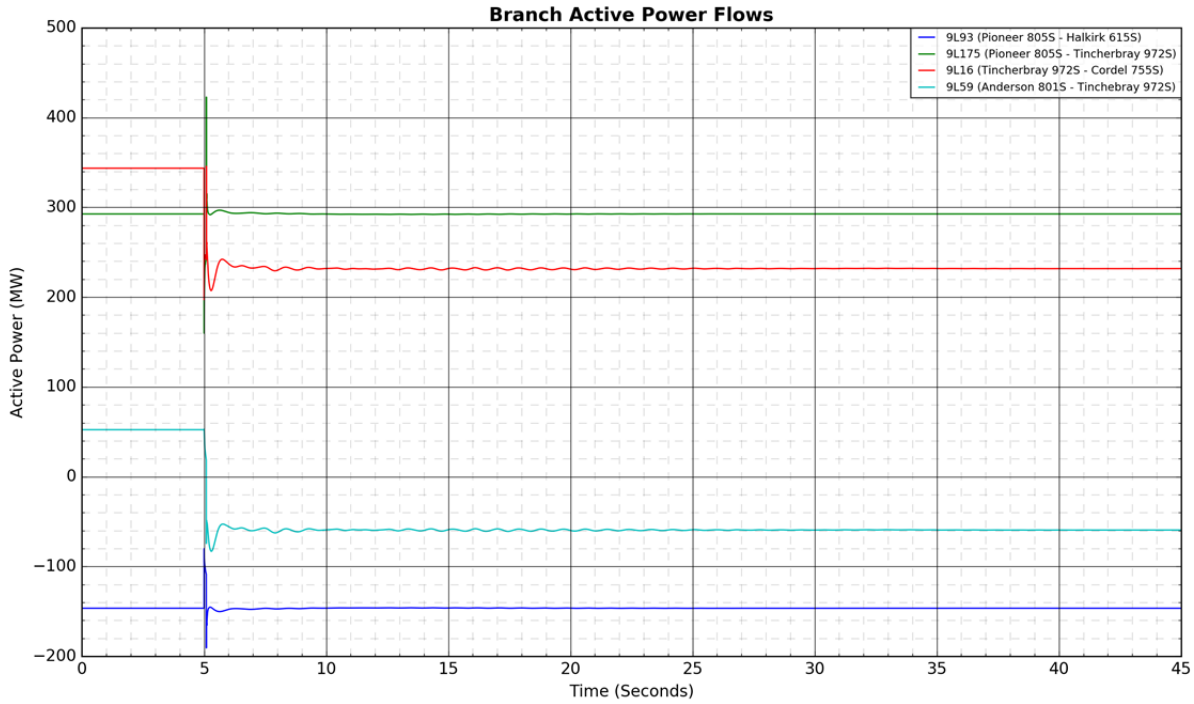
Branch Active Power Flows
9L93 (Pioneer 805S - Halkirk 615S)
9L175 (Pioneer 805S - Tincherbray 972S)
9L16 (Tincherbray 972S - Cordel 755S)
9L59 (Anderson 801S - Tinchebray 972S)
Active Power (MW)
Time (Seconds)

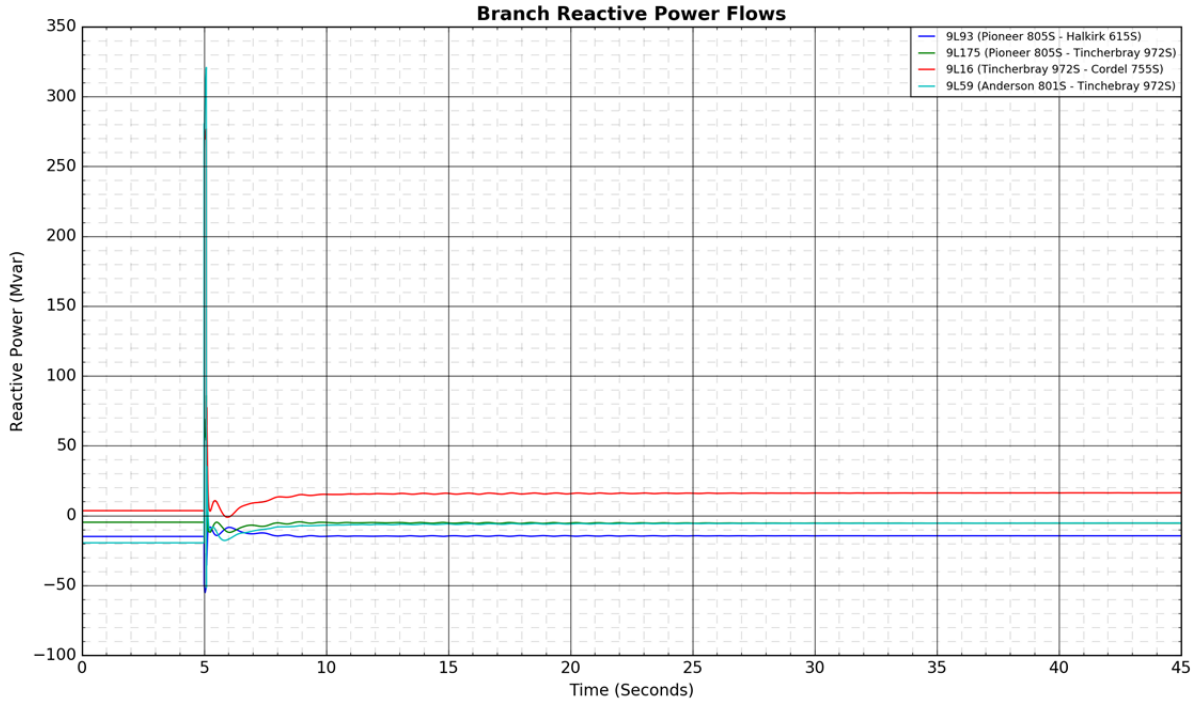
Branch Reactive Power Flows
9L93 (Pioneer 805S - Halkirk 615S)
9L175 (Pioneer 805S - Tincherbray 972S)
9L16 (Tincherbray 972S - Cordel 755S)
9L59 (Anderson 801S - Tinchebray 972S)
Reactive Power (Mvar)
Time (Seconds)

Figure A4-42: 912L\9L912 (Nevis 766S - Red Deer 63S): 3-phase fault at Red Deer 63S

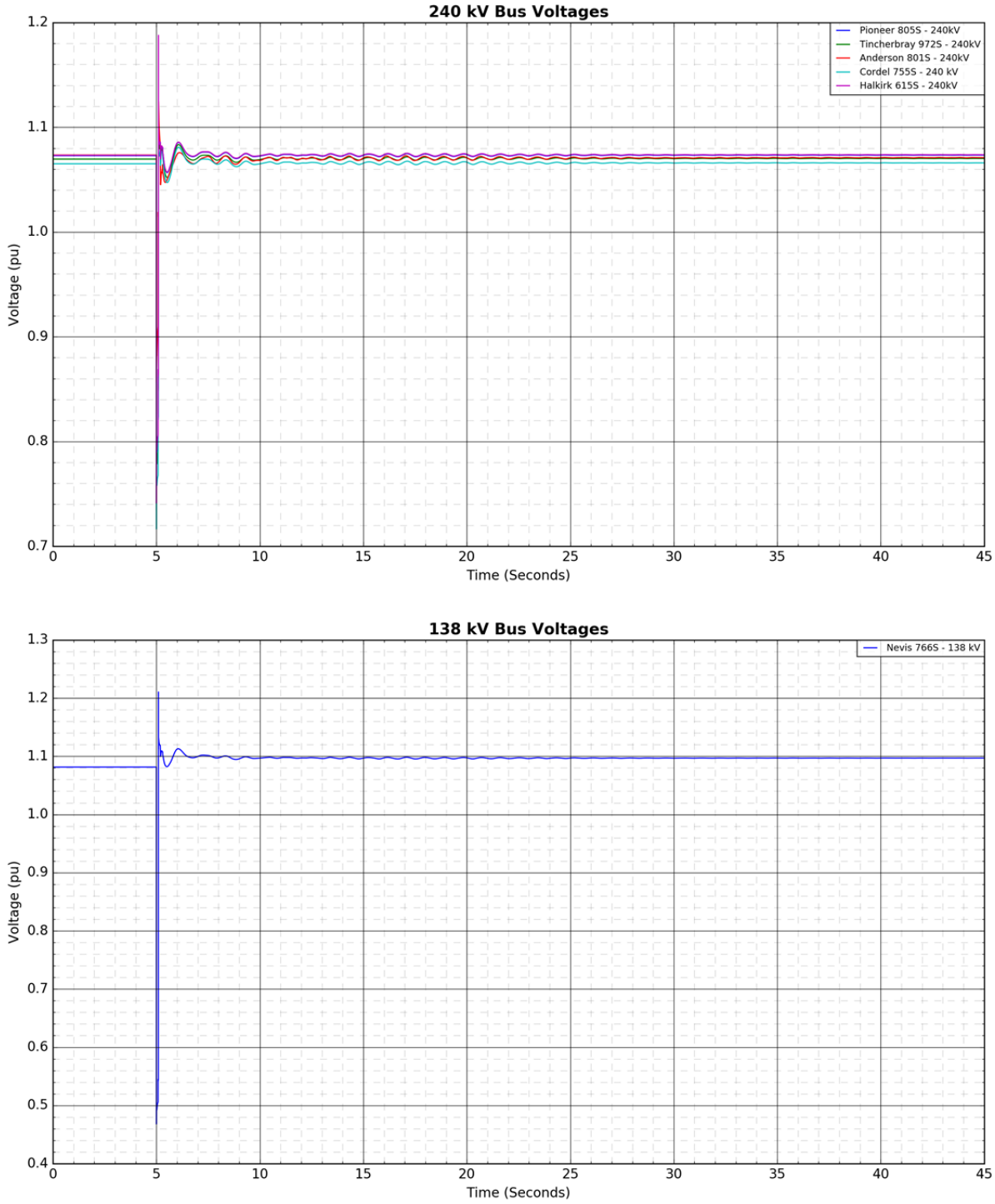

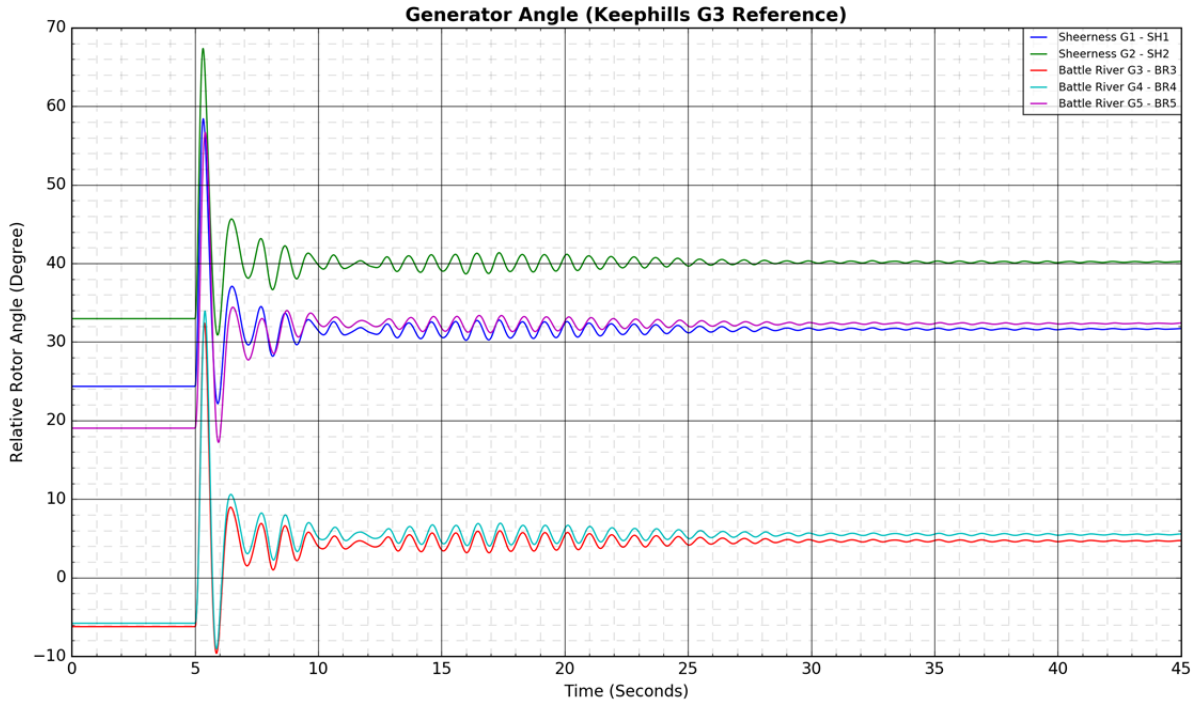
Generator Angle (Keephills G3 Reference)
Relative Rotor Angle (Degree)
Time (Seconds)
Sheerness G1 - SH1
Sheerness G2 - SH2
Battle River G3 - BR3
Battle River G4 - BR4
Battle River G5 - BR5

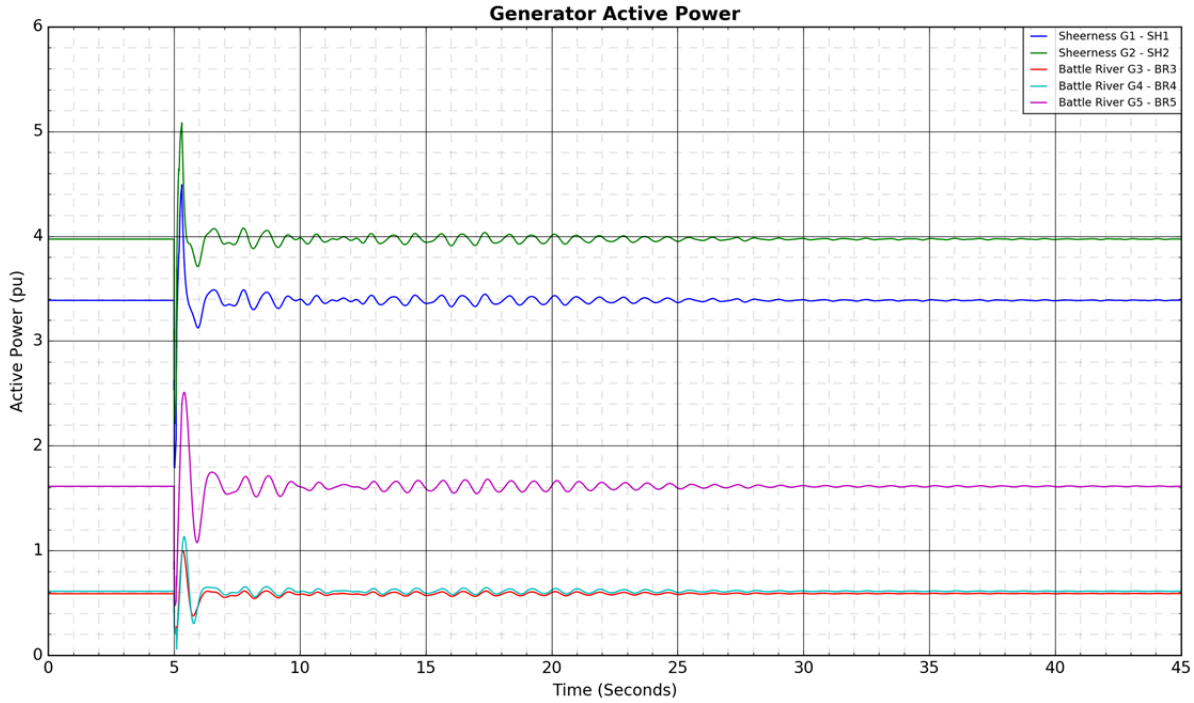
Generator Active Power
Active Power (pu)
Time (Seconds)
Sheerness G1 - SH1
Sheerness G2 - SH2
Battle River G3 - BR3
Battle River G4 - BR4
Battle River G5 - BR5

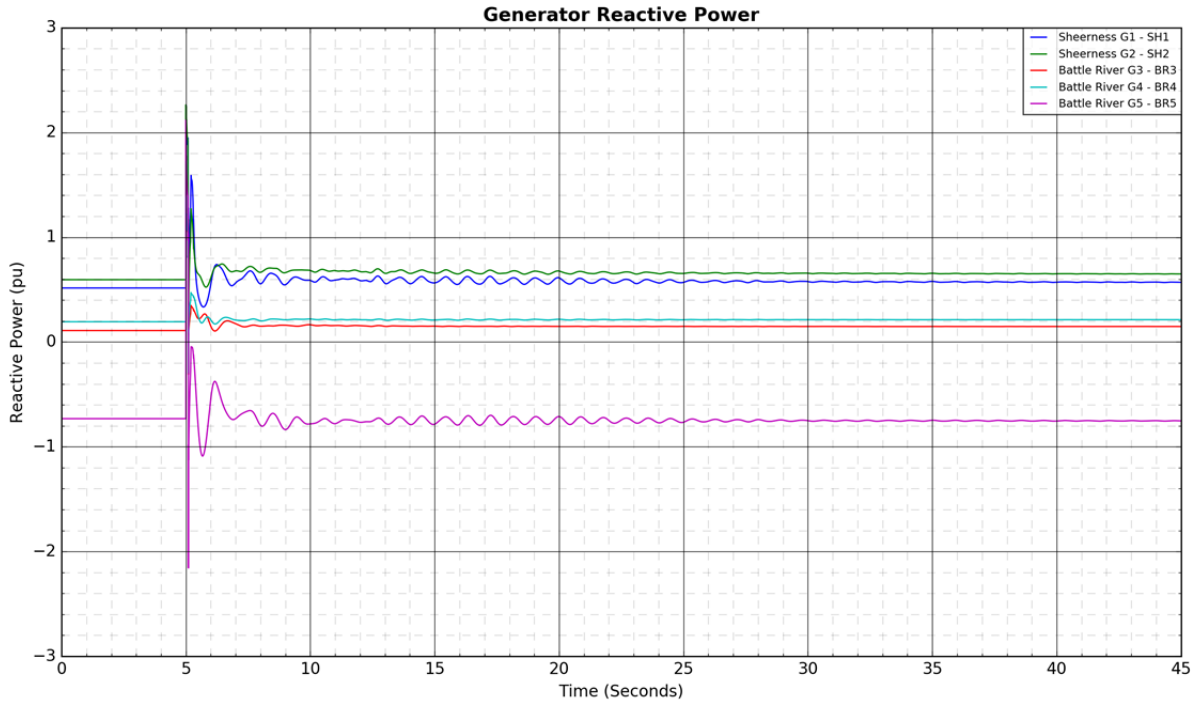
Generator Reactive Power
Sheerness G1 - SH1
Sheerness G2 - SH2
Battle River G3 - BR3
Battle River G4 - BR4
Battle River G5 - BR5
Reactive Power (pu)
Time (Seconds)

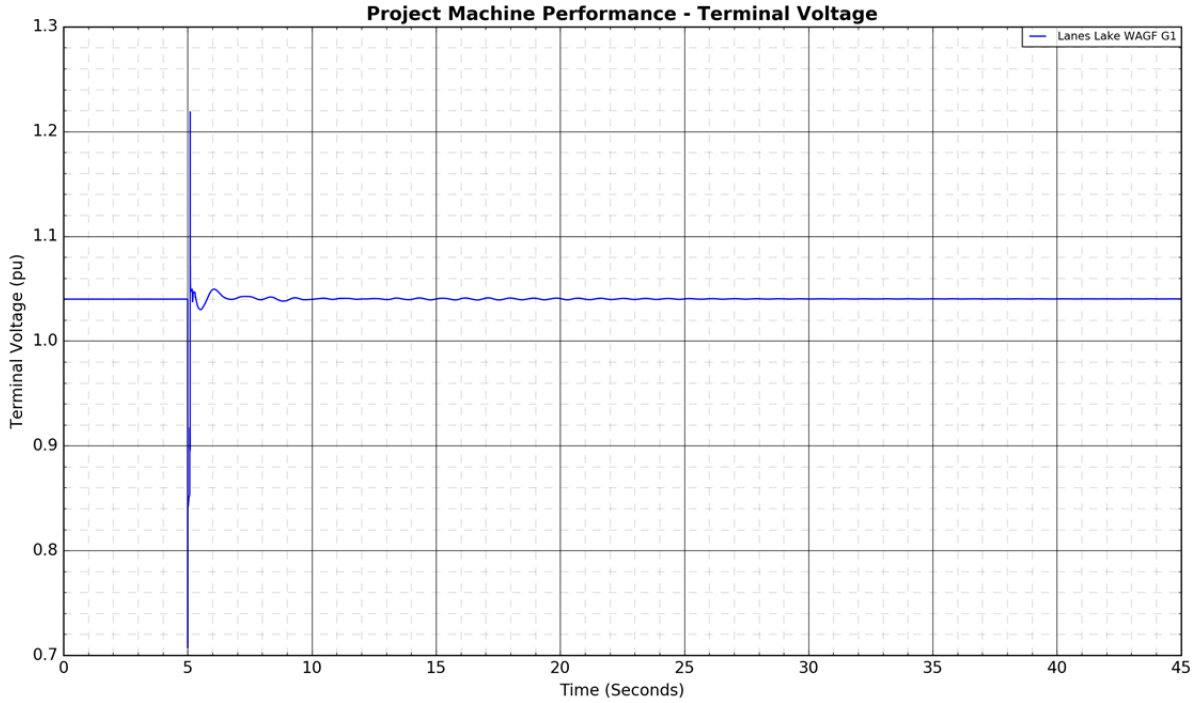
Project Machine Performance - Terminal Voltage
Lanes Lake WAGF G1
Terminal Voltage (pu)
Time (Seconds)


Project Machine Performance - Active Power
Lanes Lake WAGF G1
Active Power (pu)
Time (Seconds)
2.2
2.0
1.8
1.6
1.4
1.2
1.0
0
5
10
15
20
25
30
35
40
45

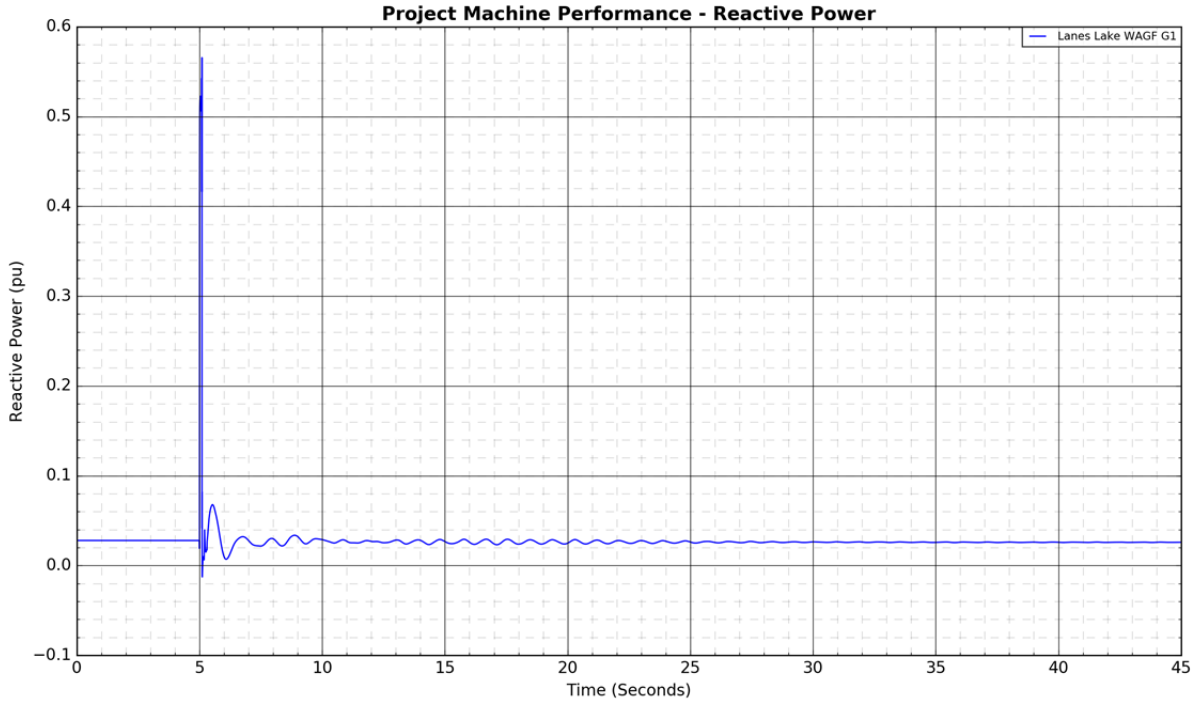
Project Machine Performance - Reactive Power
Lanes Lake WAGF G1
Reactive Power (pu)
Time (Seconds)
0.6
0.5
0.4
0.3
0.2
0.1
0.0
−0.1
0
5
10
15
20
25
30
35
40
45

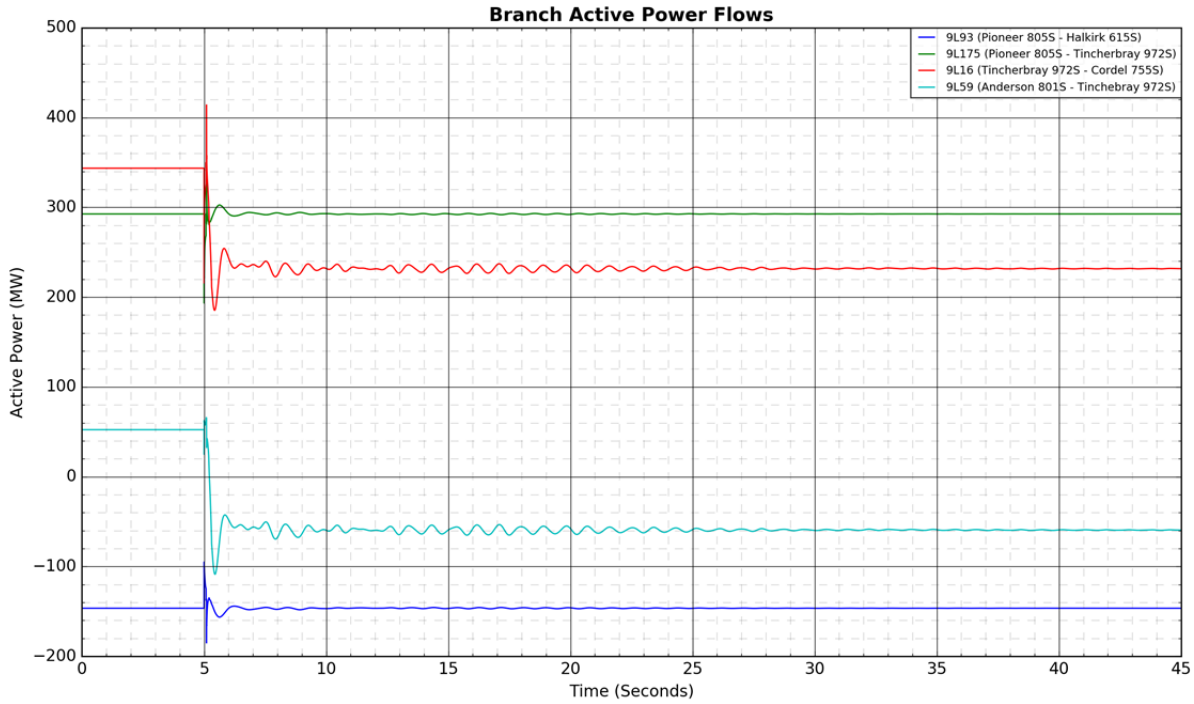
Branch Active Power Flows
9L93 (Pioneer 805S - Halkirk 615S)
9L175 (Pioneer 805S - Tincherbray 972S)
9L16 (Tincherbray 972S - Cordel 755S)
9L59 (Anderson 801S - Tinchebray 972S)
Active Power (MW)
Time (Seconds)

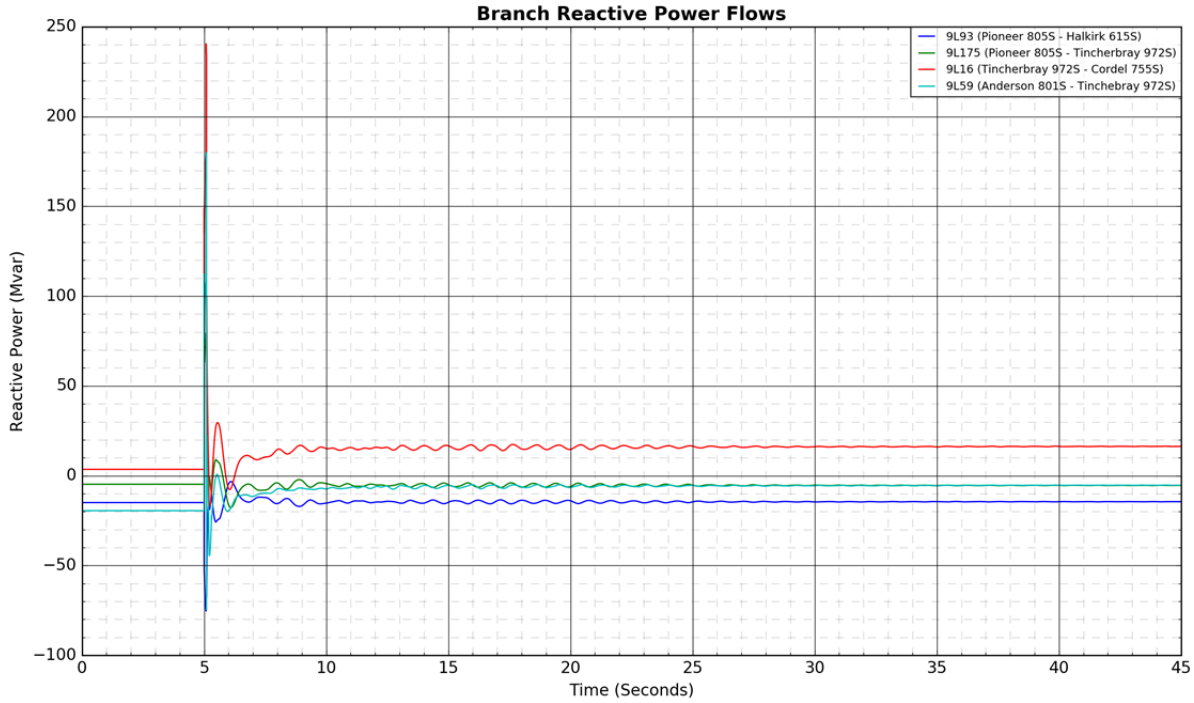
Branch Reactive Power Flows
9L93 (Pioneer 805S - Halkirk 615S)
9L175 (Pioneer 805S - Tincherbray 972S)
9L16 (Tincherbray 972S - Cordel 755S)
9L59 (Anderson 801S - Tinchebray 972S)
Reactive Power (Mvar)
Time (Seconds)

4. Stability Results 2019 Summer Peak - Case B

Figure A4-43: 9L24 (Oakland 946S - Lanfine 959S): 3-phase fault at Oakland 946S

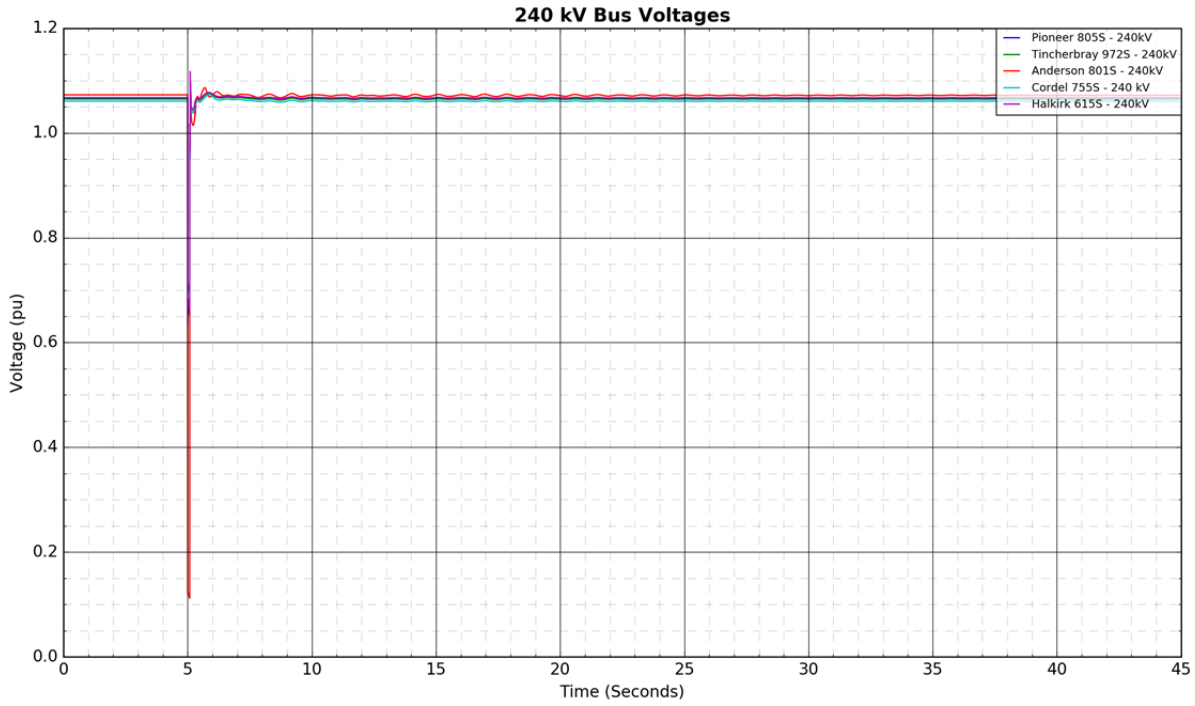

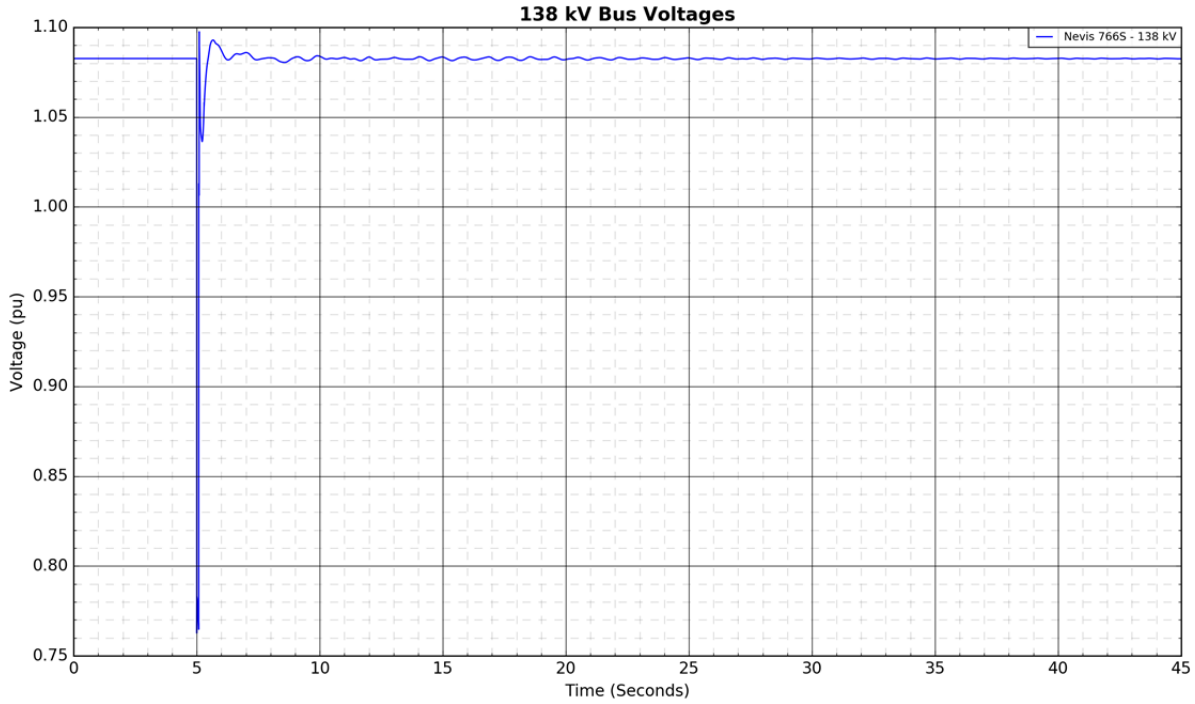

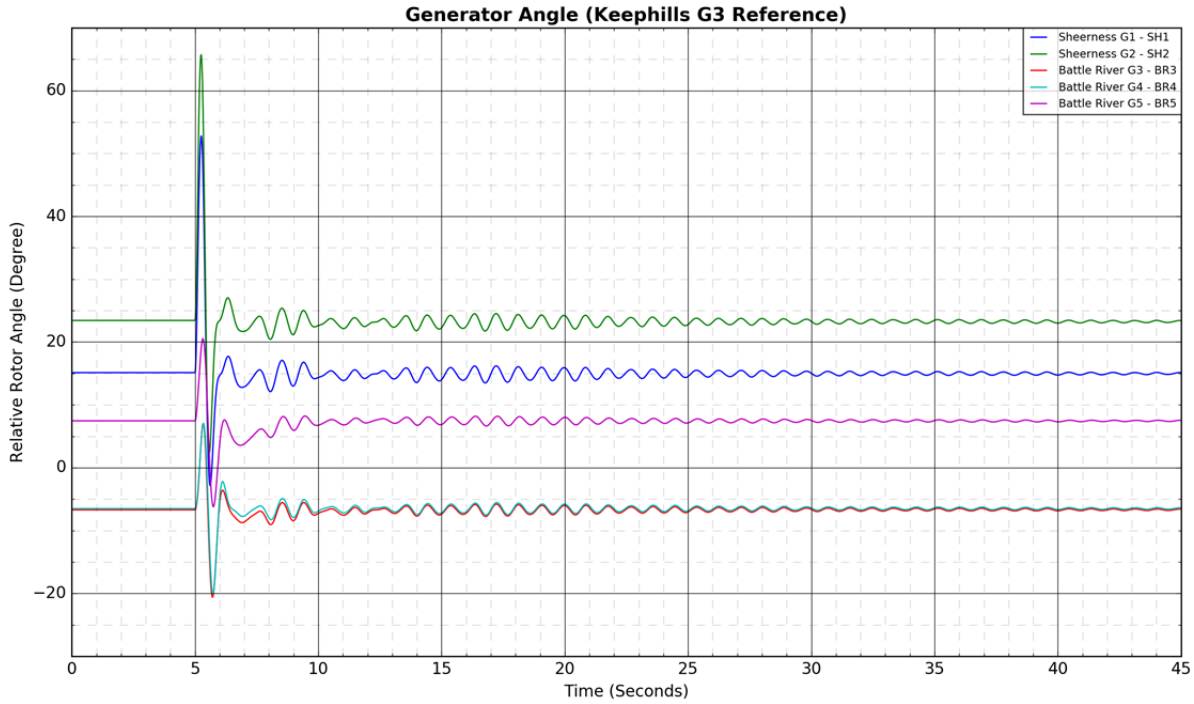
Generator Angle (Keephills G3 Reference)
Relative Rotor Angle (Degree)
Time (Seconds)
Sheerness G1 - SH1
Sheerness G2 - SH2
Battle River G3 - BR3
Battle River G4 - BR4
Battle River G5 - BR5

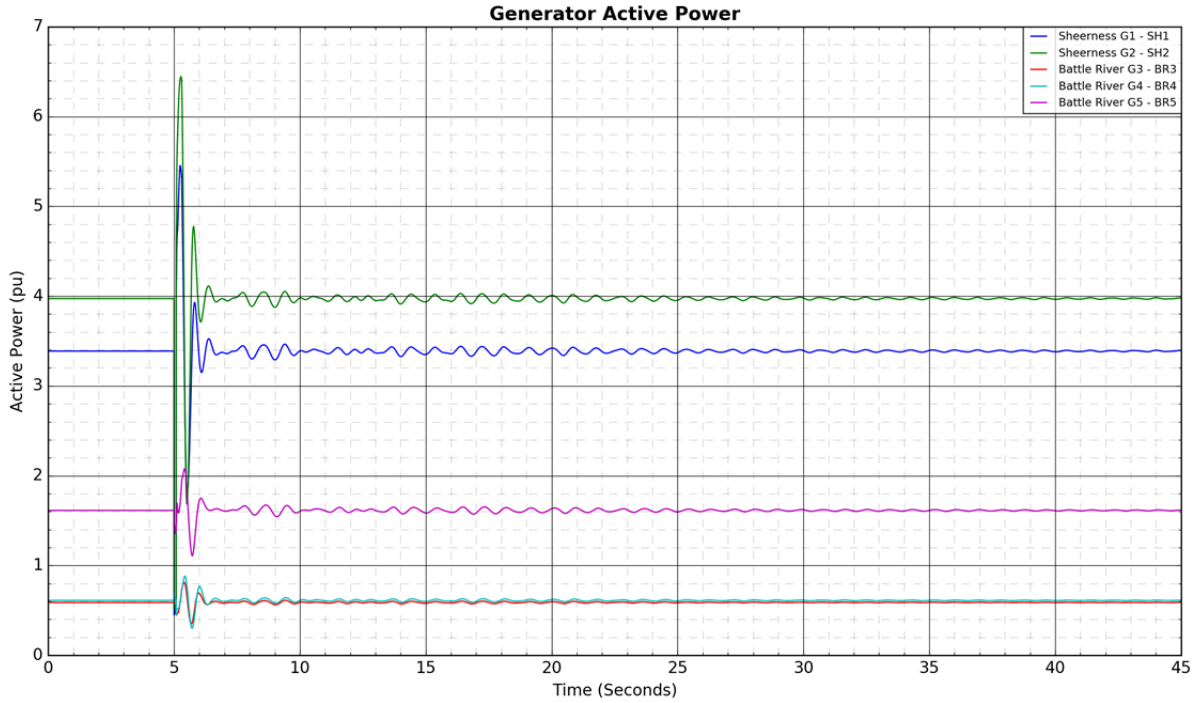
Generator Active Power
Active Power (pu)
Time (Seconds)
Sheerness G1 - SH1
Sheerness G2 - SH2
Battle River G3 - BR3
Battle River G4 - BR4
Battle River G5 - BR5

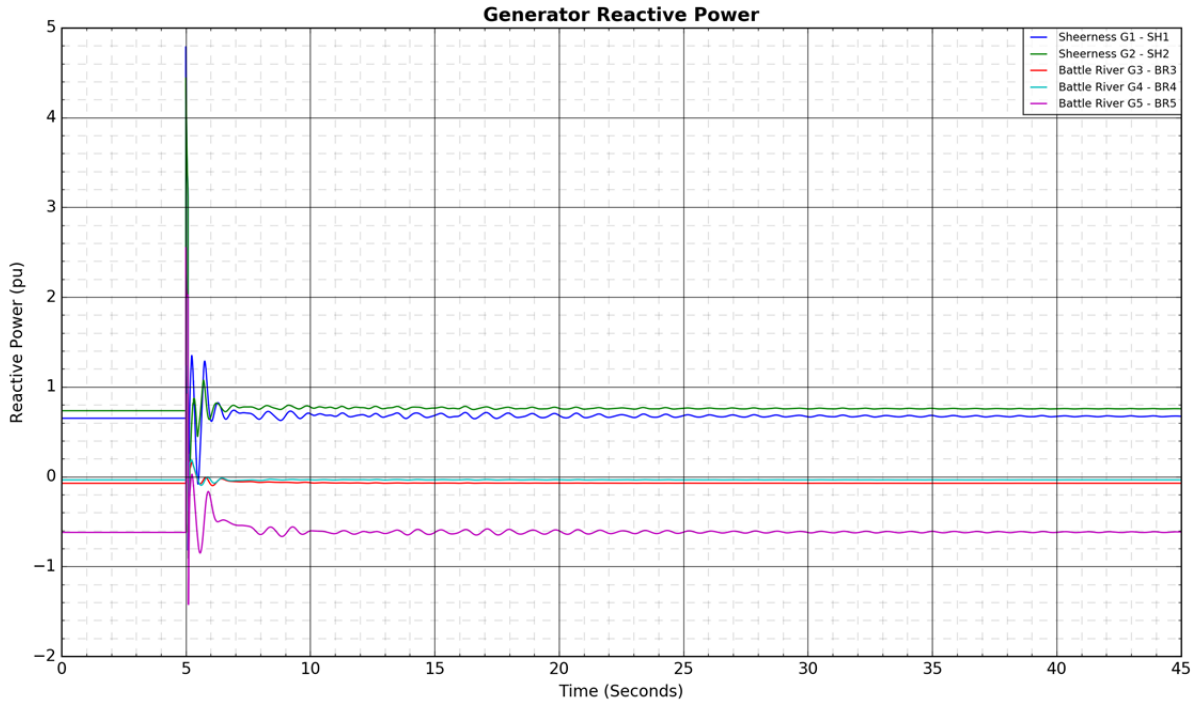
Generator Reactive Power
Sheerness G1 - SH1
Sheerness G2 - SH2
Battle River G3 - BR3
Battle River G4 - BR4
Battle River G5 - BR5
Reactive Power (pu)
Time (Seconds)

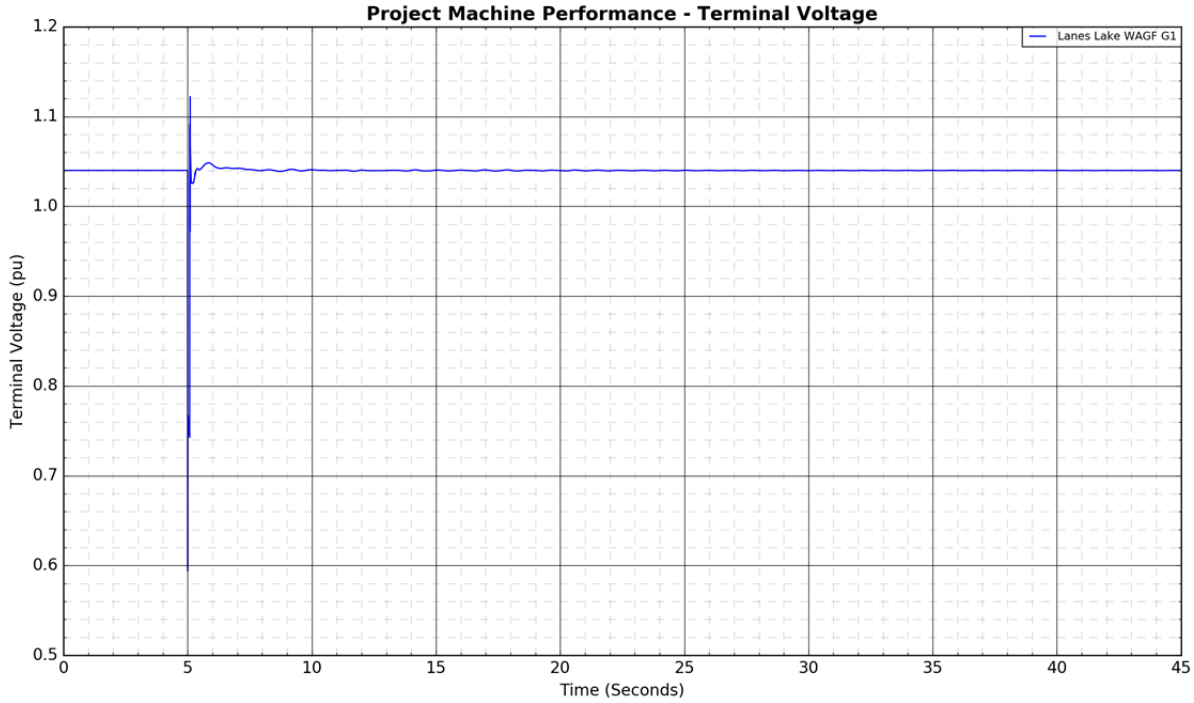
Project Machine Performance - Terminal Voltage
Lanes Lake WAGF G1
Terminal Voltage (pu)
Time (Seconds)


Project Machine Performance - Active Power
Lanes Lake WAGF G1
Active Power (pu)
Time (Seconds)
2.2
2.0
1.8
1.6
1.4
1.2
1.0
0.8
0
5
10
15
20
25
30
35
40
45

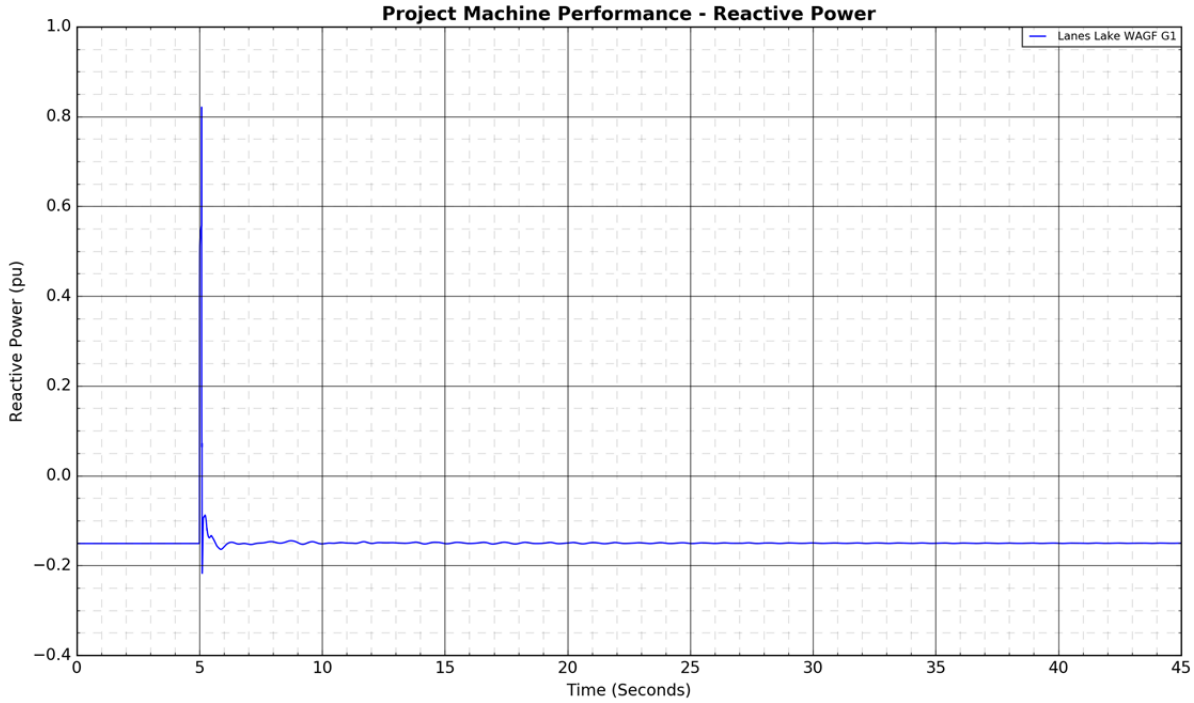
Project Machine Performance - Reactive Power
Lanes Lake WAGF G1
Reactive Power (pu)
Time (Seconds)
1.0
0.8
0.6
0.4
0.2
0.0
−0.2
−0.4
0
5
10
15
20
25
30
35
40
45

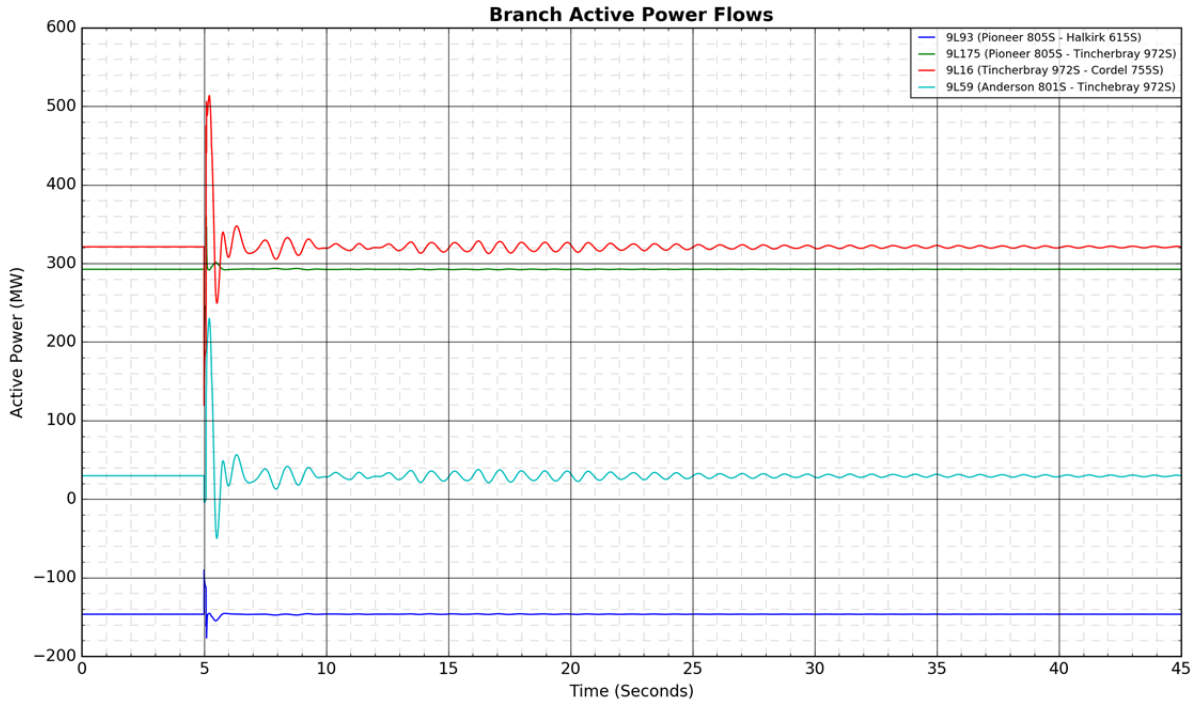
Branch Active Power Flows
9L93 (Pioneer 805S - Halkirk 615S)
9L175 (Pioneer 805S - Tincherbray 972S)
9L16 (Tincherbray 972S - Cordel 755S)
9L59 (Anderson 801S - Tinchebray 972S)
Active Power (MW)
Time (Seconds)

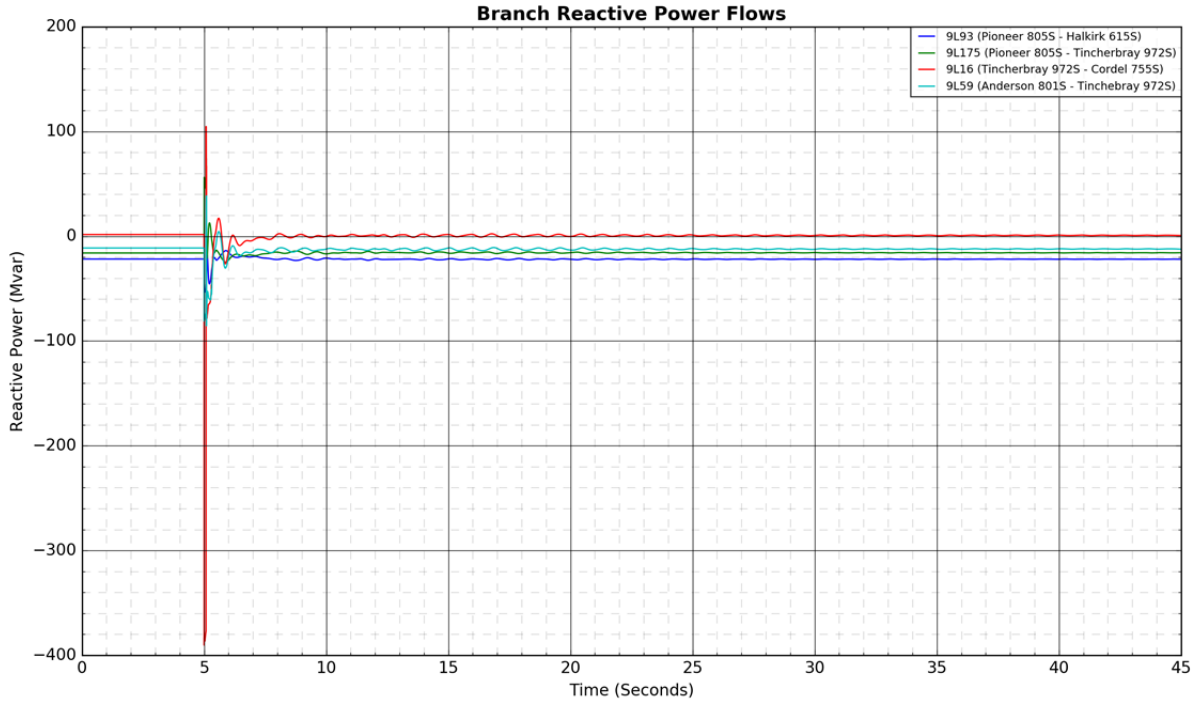
Branch Reactive Power Flows
9L93 (Pioneer 805S - Halkirk 615S)
9L175 (Pioneer 805S - Tincherbray 972S)
9L16 (Tincherbray 972S - Cordel 755S)
9L59 (Anderson 801S - Tinchebray 972S)
Reactive Power (Mvar)
Time (Seconds)

Figure A4-44: 9L24 (Oakland 946S - Lanfine 959S): 3-phase fault at Lanfine 959S

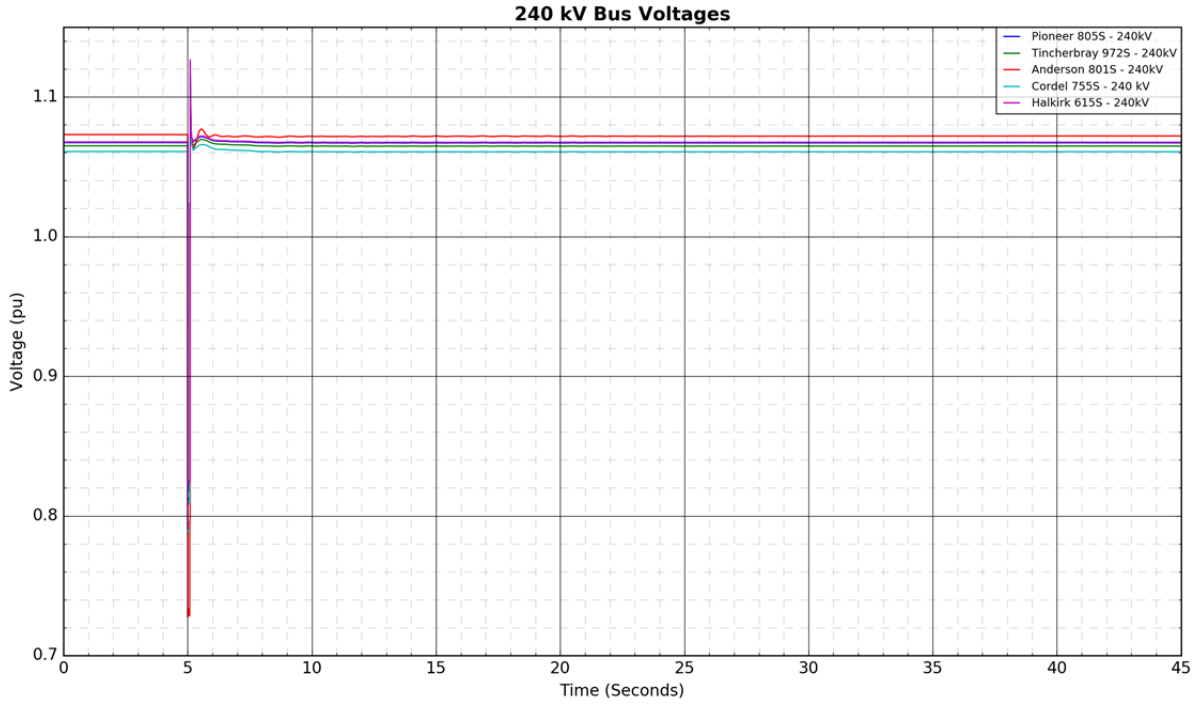

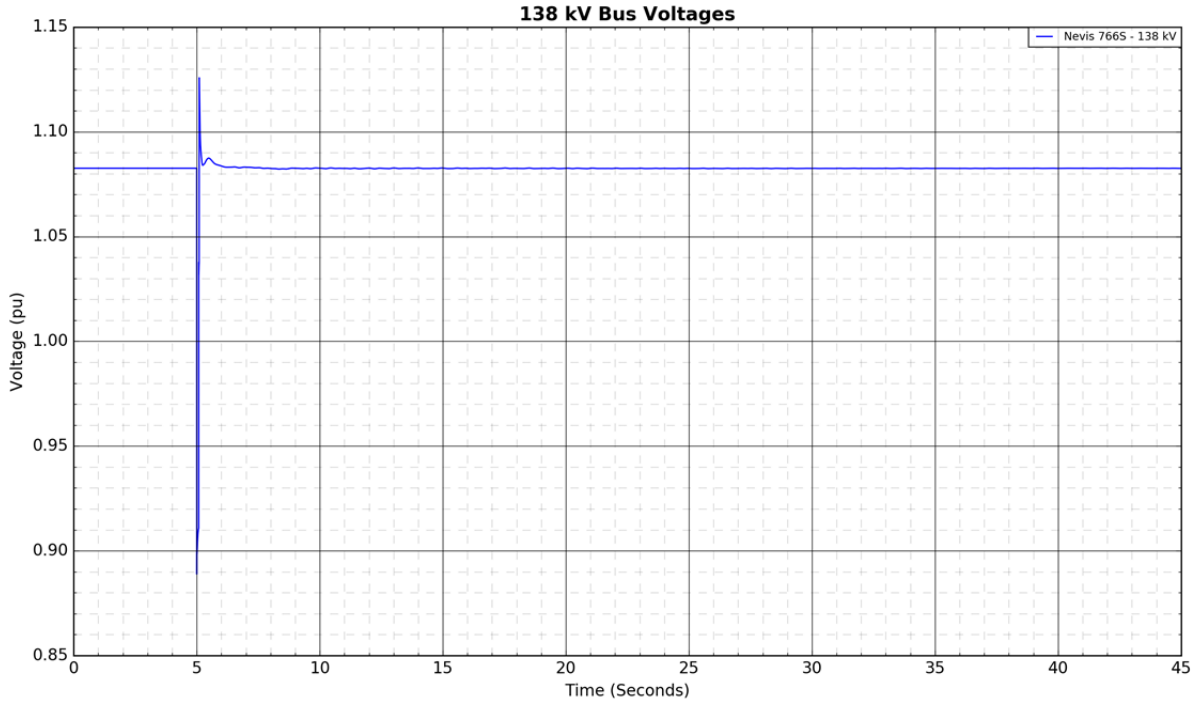

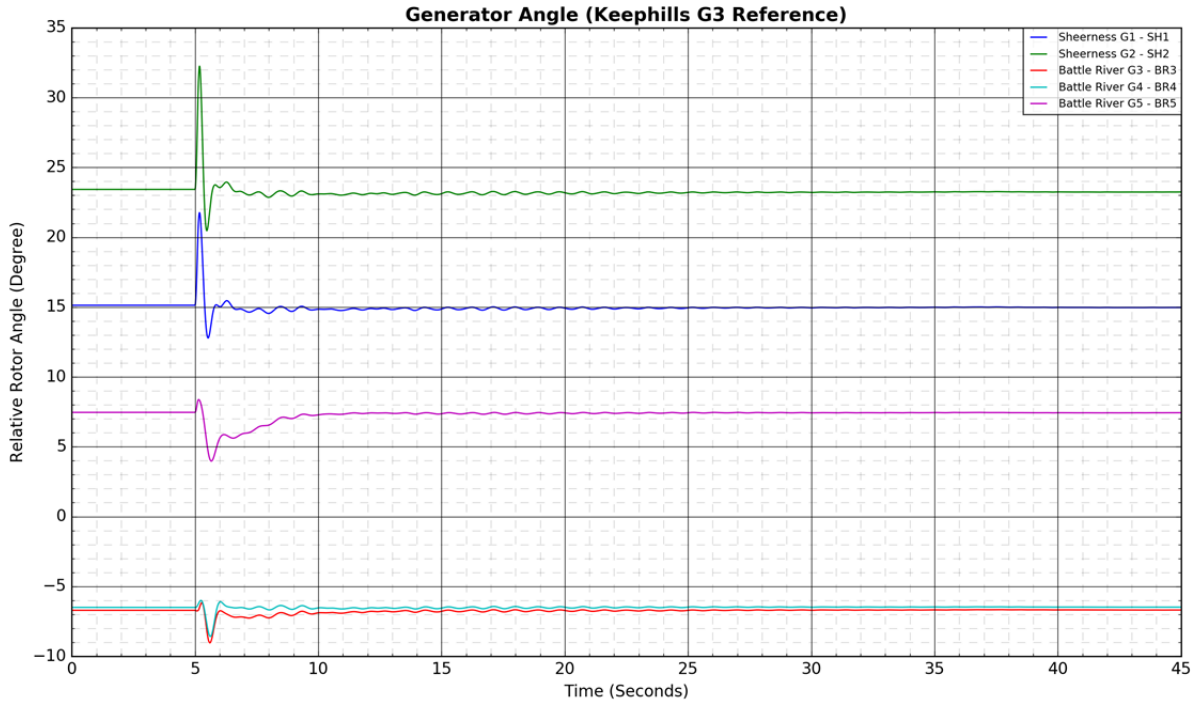
Generator Angle (Keephills G3 Reference)
Relative Rotor Angle (Degree)
Time (Seconds)
Sheerness G1 - SH1
Sheerness G2 - SH2
Battle River G3 - BR3
Battle River G4 - BR4
Battle River G5 - BR5

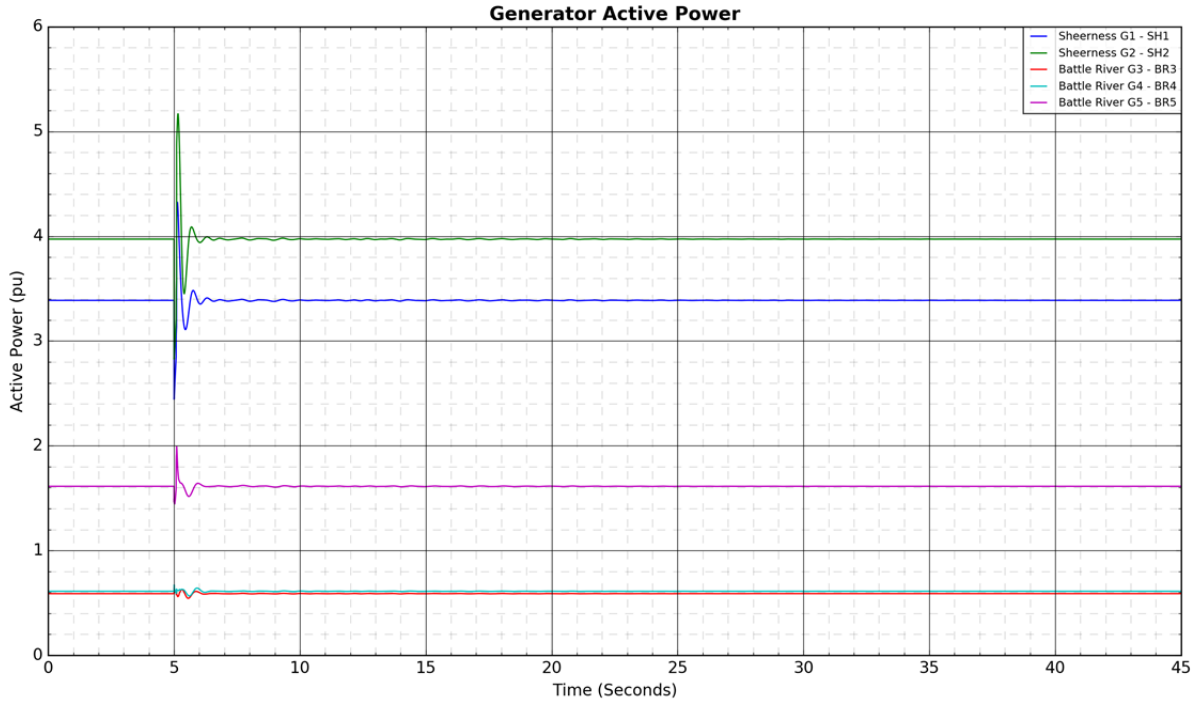
Generator Active Power
Active Power (pu)
Time (Seconds)
Sheerness G1 - SH1
Sheerness G2 - SH2
Battle River G3 - BR3
Battle River G4 - BR4
Battle River G5 - BR5

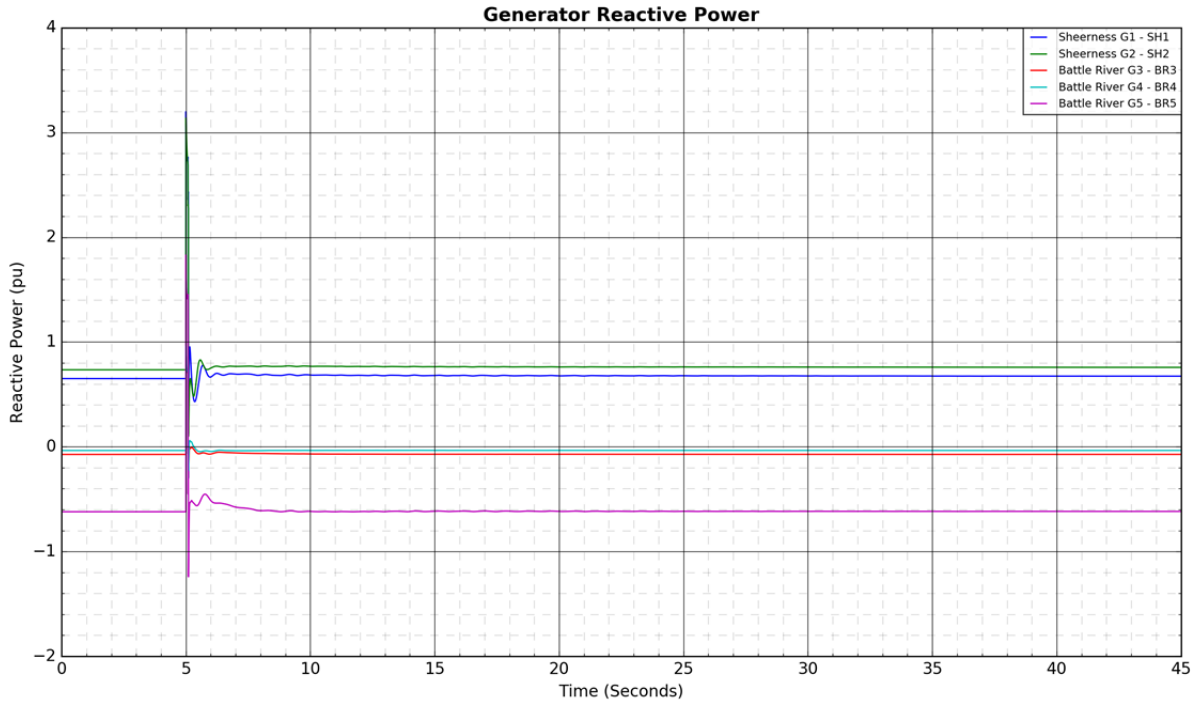
Generator Reactive Power
Sheerness G1 - SH1
Sheerness G2 - SH2
Battle River G3 - BR3
Battle River G4 - BR4
Battle River G5 - BR5
Reactive Power (pu)
Time (Seconds)

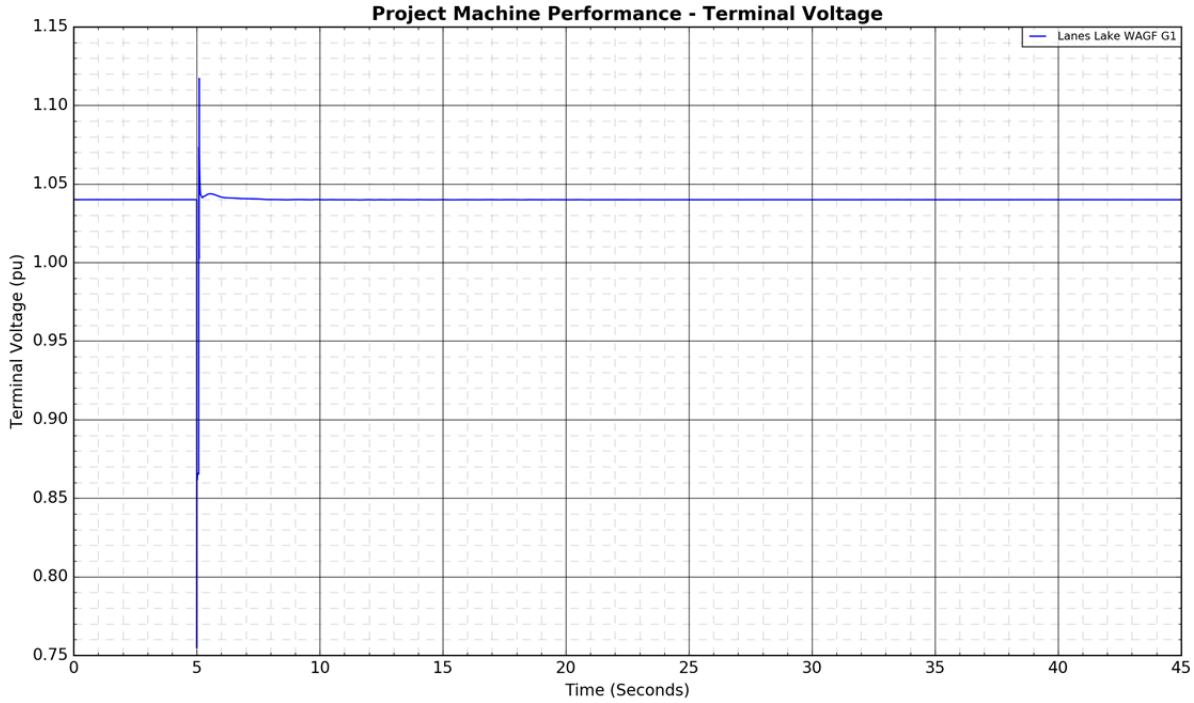
Project Machine Performance - Terminal Voltage
Lanes Lake WAGF G1
Terminal Voltage (pu)
Time (Seconds)


Project Machine Performance - Active Power
Lanes Lake WAGF G1
Active Power (pu)
1.9
1.8
1.7
1.6
1.5
1.4
1.3
1.2
1.1
1.0
0
5
10
15
20
25
30
35
40
45
Time (Seconds)


Project Machine Performance - Reactive Power
Lanes Lake WAGF G1
Reactive Power (pu)
0.5
0.4
0.3
0.2
0.1
0.0
−0.1
−0.2
−0.3
0
5
10
15
20
25
30
35
40
45
Time (Seconds)

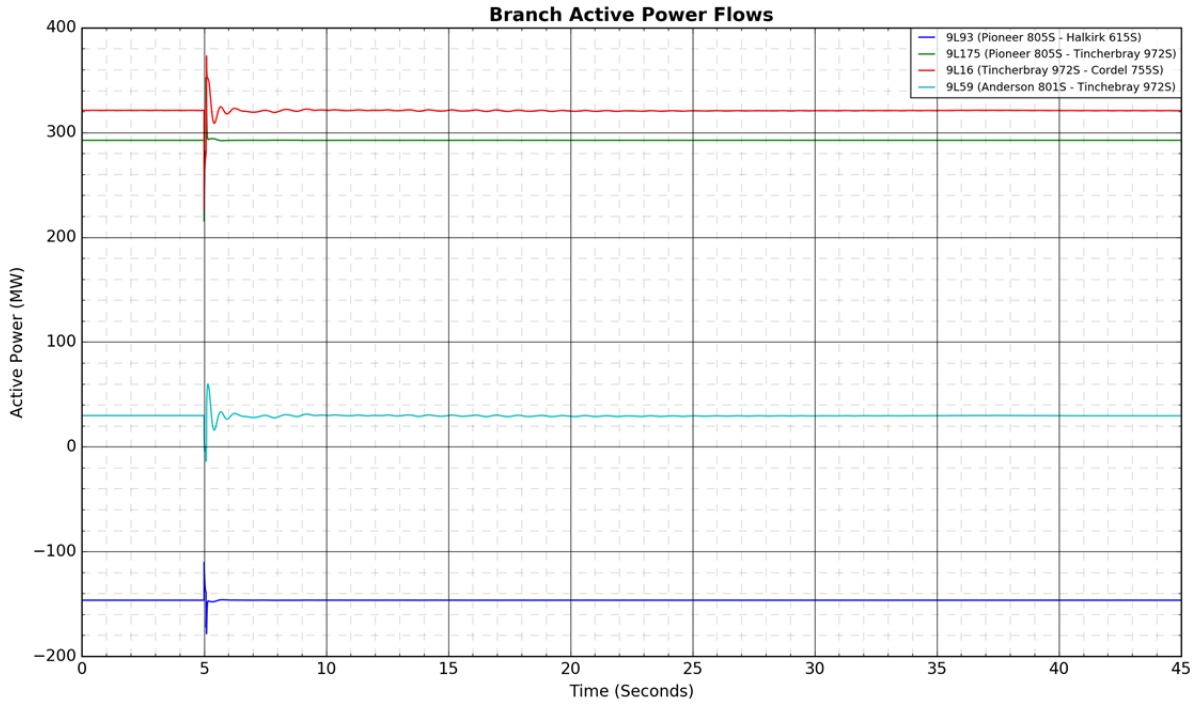
Branch Active Power Flows
9L93 (Pioneer 805S - Halkirk 615S)
9L175 (Pioneer 805S - Tincherbray 972S)
9L16 (Tincherbray 972S - Cordel 755S)
9L59 (Anderson 801S - Tinchebray 972S)
Active Power (MW)
Time (Seconds)

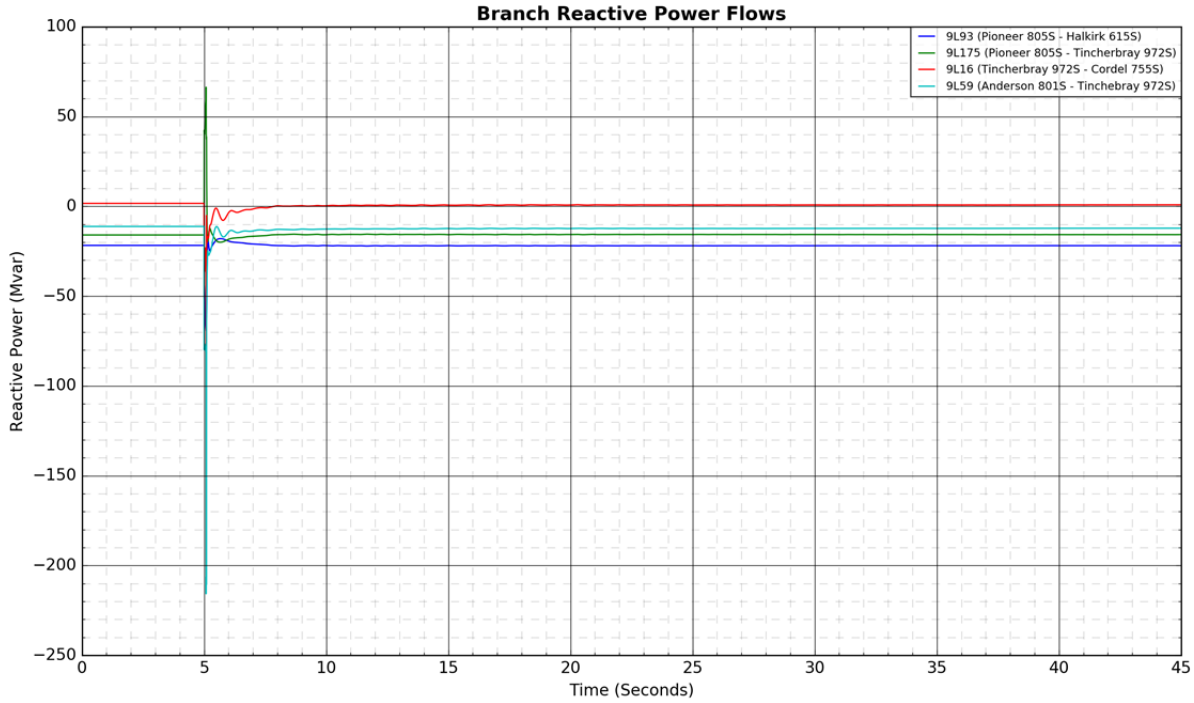
Branch Reactive Power Flows
9L93 (Pioneer 805S - Halkirk 615S)
9L175 (Pioneer 805S - Tincherbray 972S)
9L16 (Tincherbray 972S - Cordel 755S)
9L59 (Anderson 801S - Tinchebray 972S)
Reactive Power (Mvar)
Time (Seconds)

Figure A4-45: 9L29 (Oakland 946S - Coyote Lake 963S): 3-phase fault at Oakland 946S

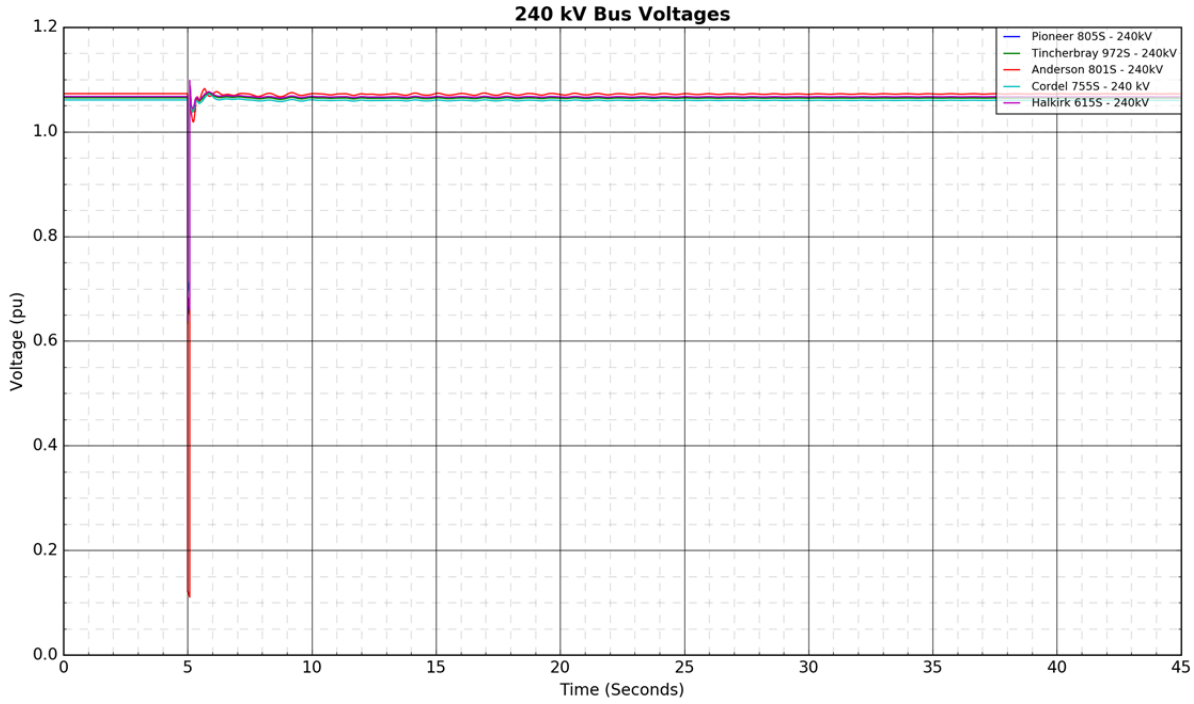

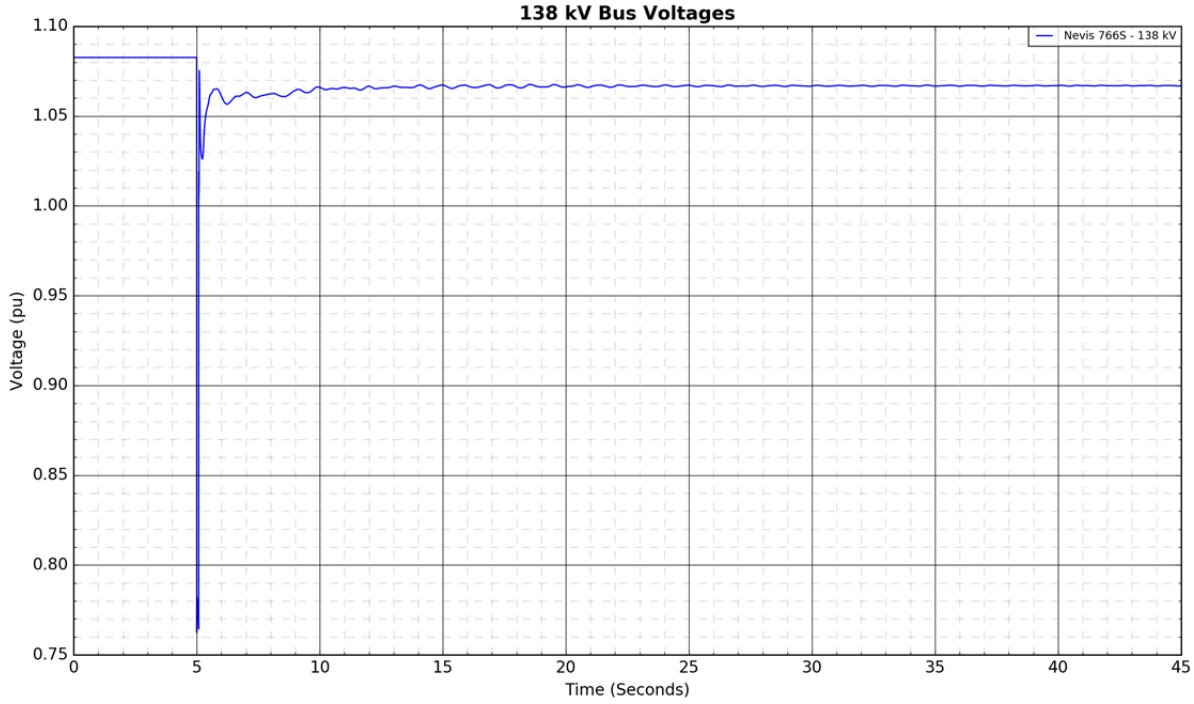

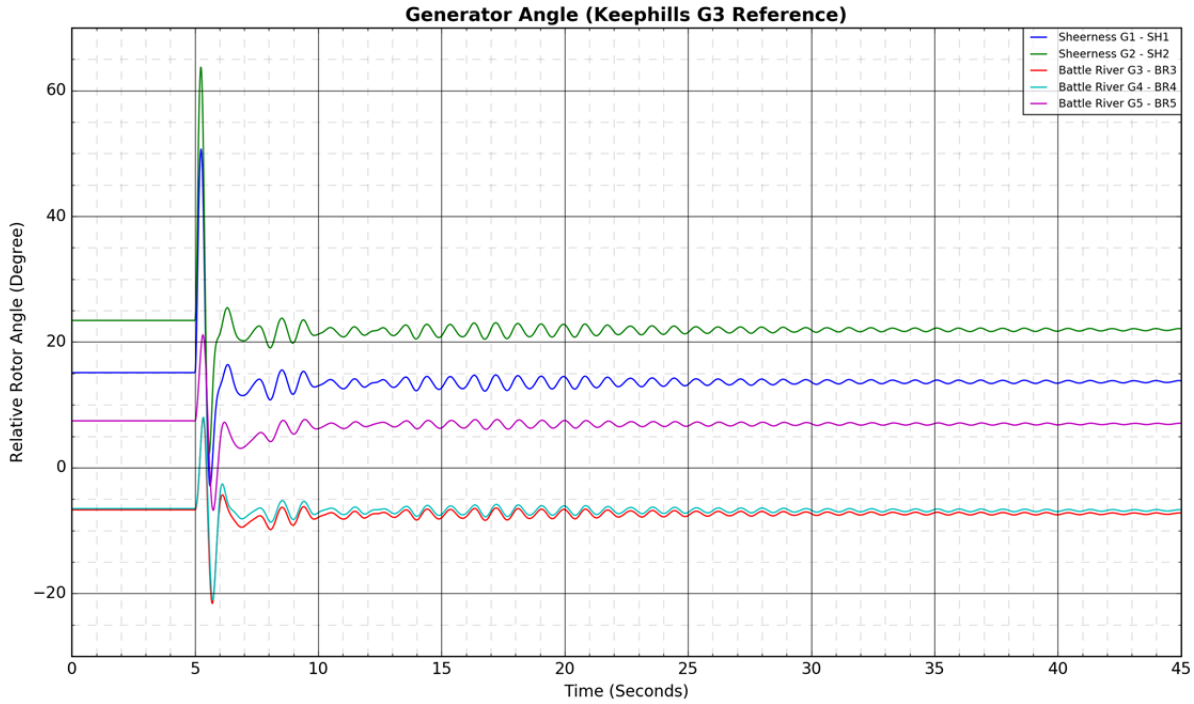
Generator Angle (Keephills G3 Reference)
Relative Rotor Angle (Degree)
Time (Seconds)
Sheerness G1 - SH1
Sheerness G2 - SH2
Battle River G3 - BR3
Battle River G4 - BR4
Battle River G5 - BR5

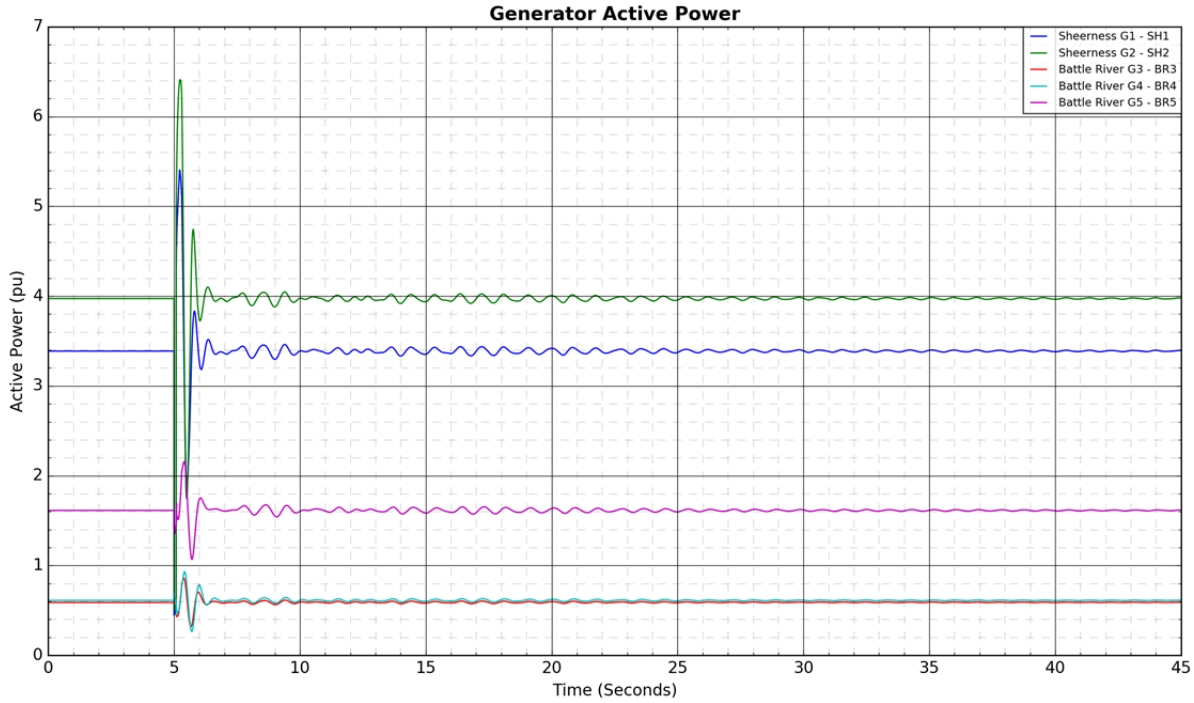
Generator Active Power
Active Power (pu)
Time (Seconds)
Sheerness G1 - SH1
Sheerness G2 - SH2
Battle River G3 - BR3
Battle River G4 - BR4
Battle River G5 - BR5

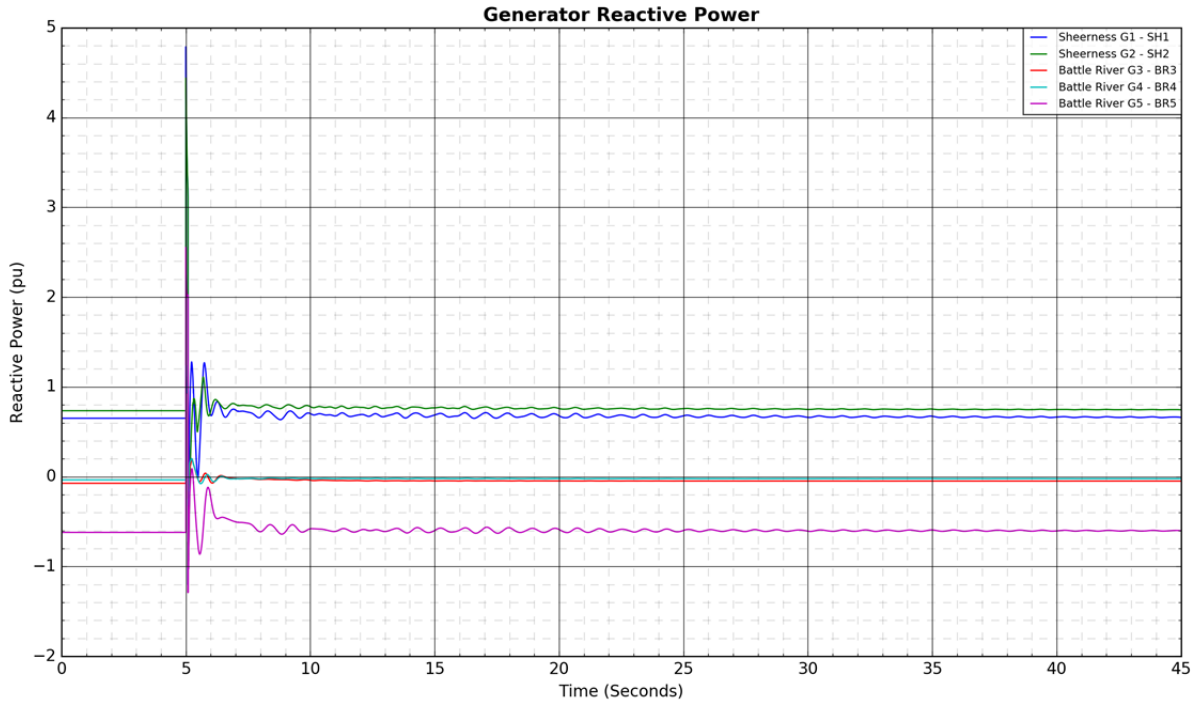
Generator Reactive Power
Sheerness G1 - SH1
Sheerness G2 - SH2
Battle River G3 - BR3
Battle River G4 - BR4
Battle River G5 - BR5
Reactive Power (pu)
Time (Seconds)

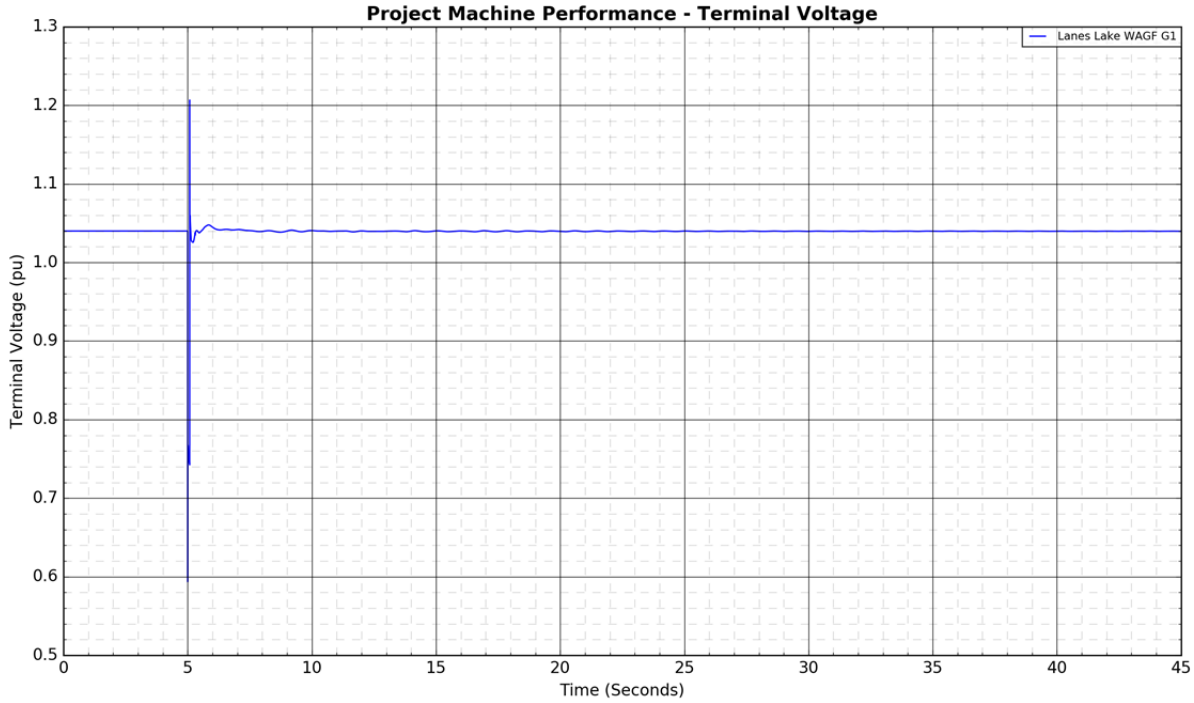
Project Machine Performance - Terminal Voltage
Lanes Lake WAGF G1
Terminal Voltage (pu)
Time (Seconds)


Project Machine Performance - Active Power
Lanes Lake WAGF G1
Active Power (pu)
Time (Seconds)
2.4
2.2
2.0
1.8
1.6
1.4
1.2
1.0
0.8
0
5
10
15
20
25
30
35
40
45

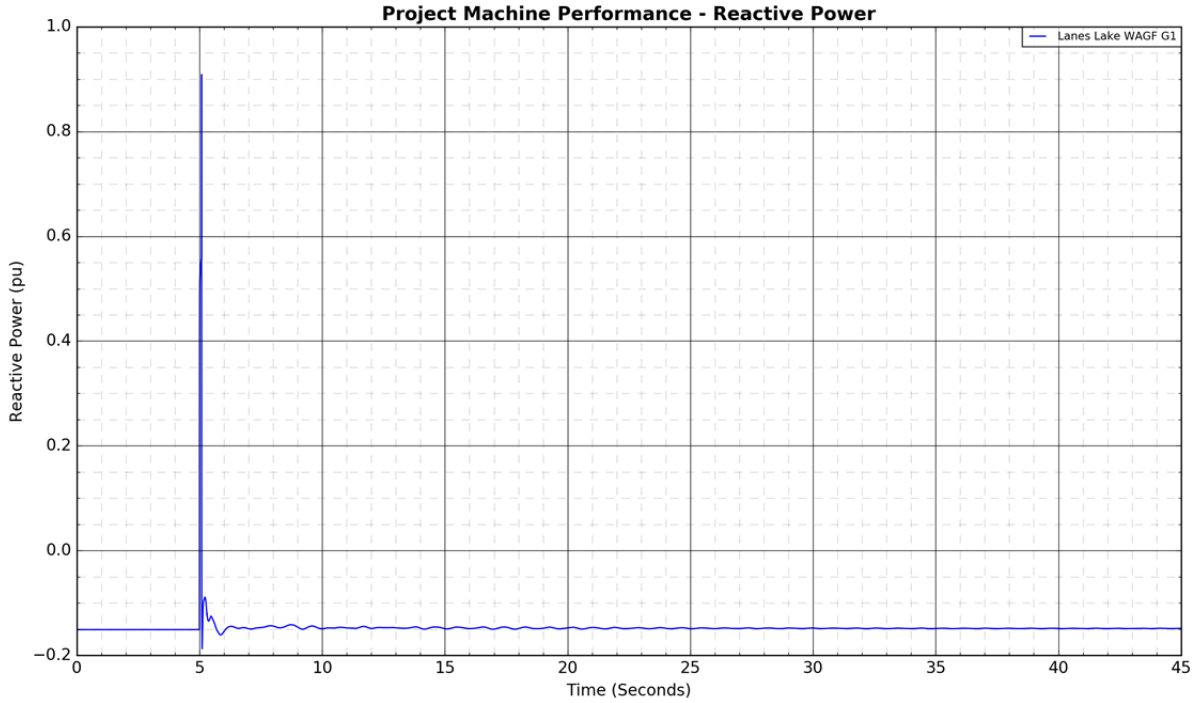
Project Machine Performance - Reactive Power
Lanes Lake WAGF G1
Reactive Power (pu)
Time (Seconds)
1.0
0.8
0.6
0.4
0.2
0.0
−0.2
0
5
10
15
20
25
30
35
40
45


Branch Active Power Flows
9L93 (Pioneer 805S - Halkirk 615S)
9L175 (Pioneer 805S - Tincherbray 972S)
9L16 (Tincherbray 972S - Cordel 755S)
9L59 (Anderson 801S - Tinchebray 972S)
Active Power (MW)
Time (Seconds)

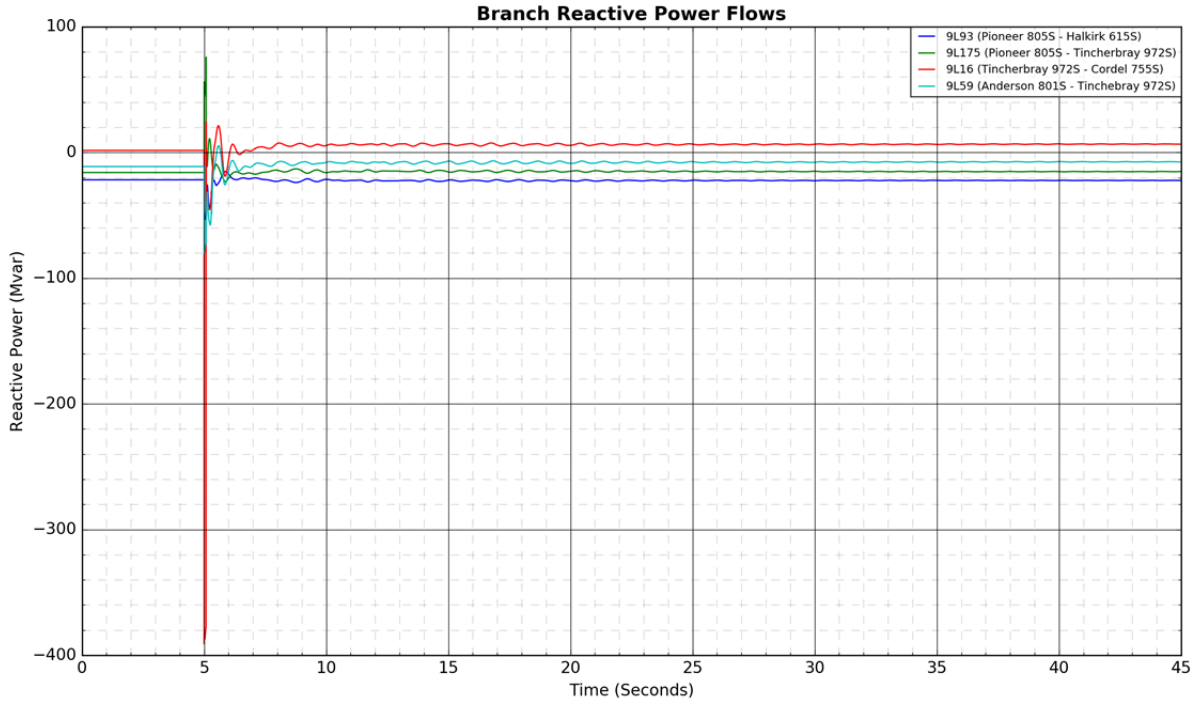
Branch Reactive Power Flows
9L93 (Pioneer 805S - Halkirk 615S)
9L175 (Pioneer 805S - Tincherbray 972S)
9L16 (Tincherbray 972S - Cordel 755S)
9L59 (Anderson 801S - Tinchebray 972S)
Reactive Power (Mvar)
Time (Seconds)

Figure A4-46: 9L29 (Oakland 946S - Coyote Lake 963S): 3-phase fault at Coyote Lake 963S

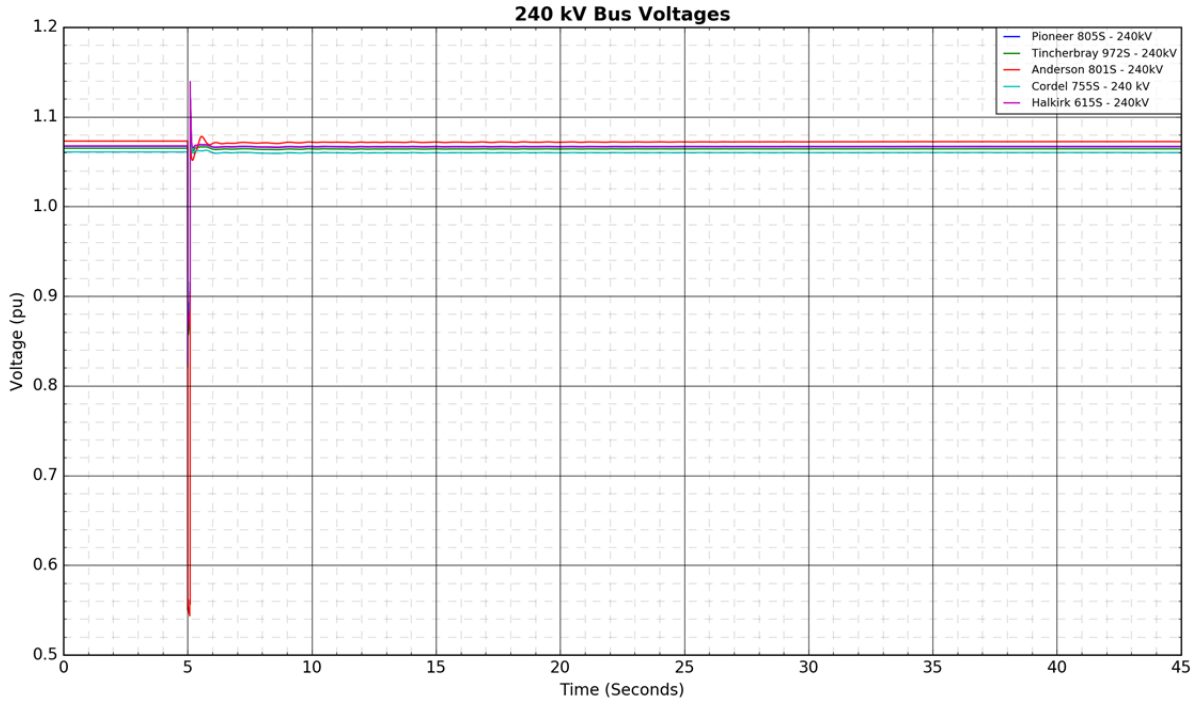

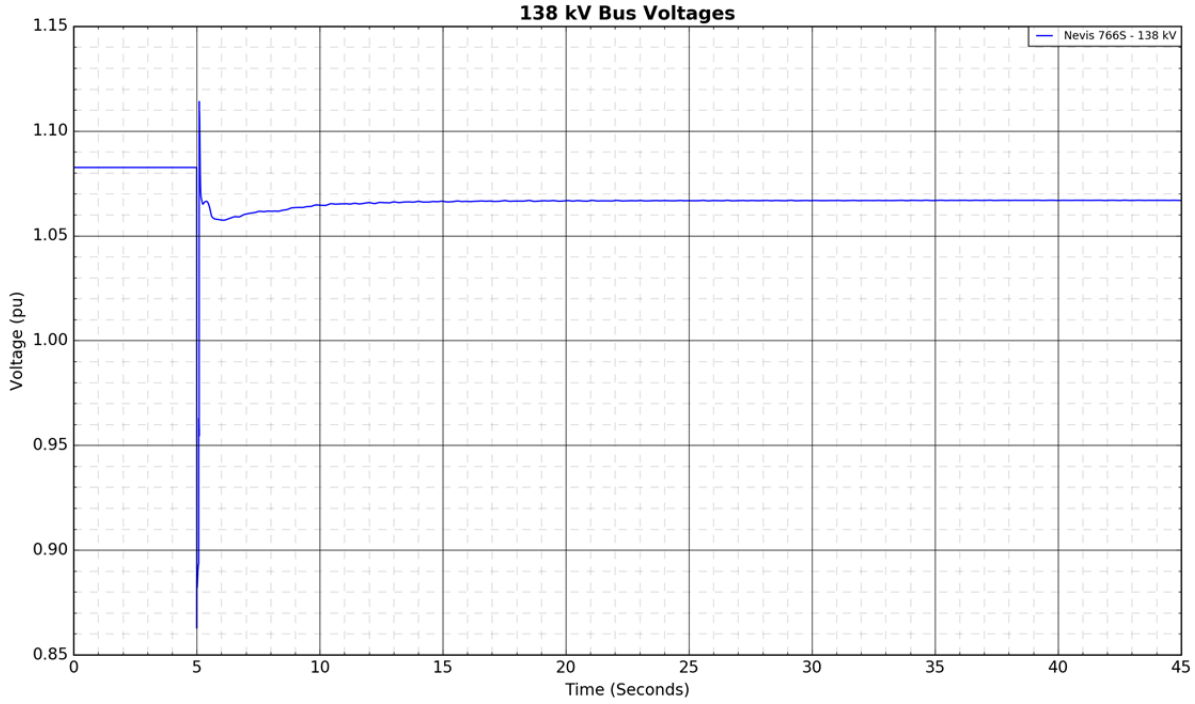

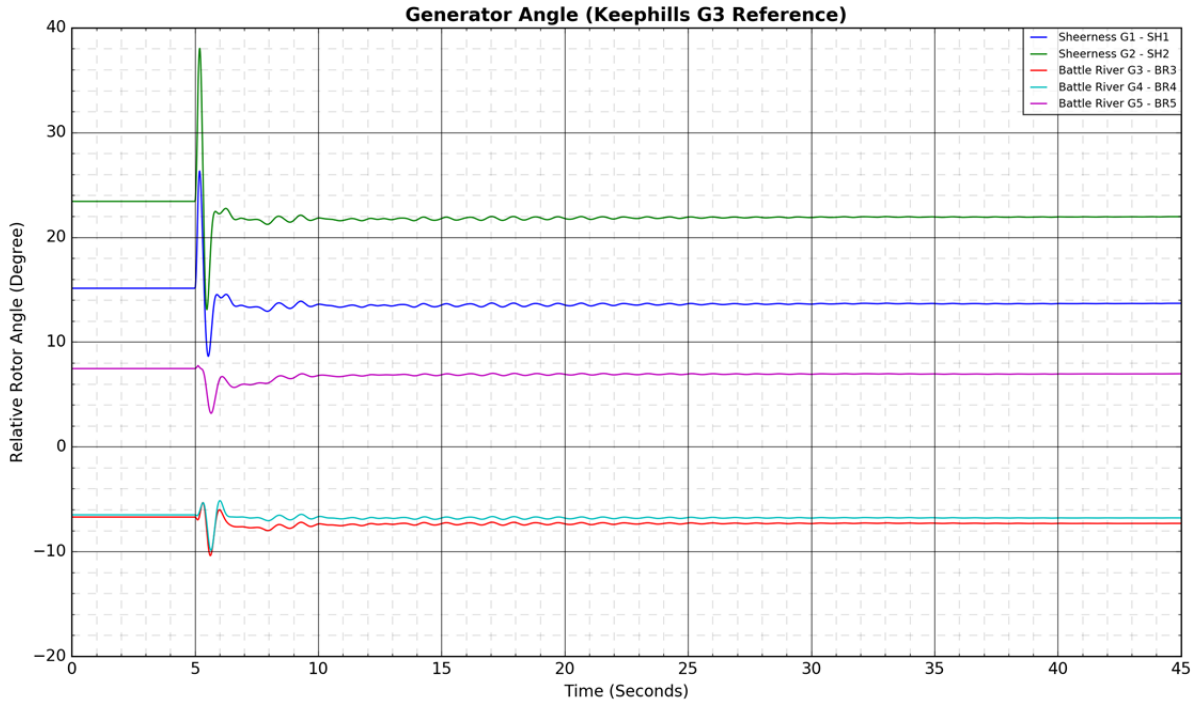
Generator Angle (Keephills G3 Reference)
Relative Rotor Angle (Degree)
Time (Seconds)
Sheerness G1 - SH1
Sheerness G2 - SH2
Battle River G3 - BR3
Battle River G4 - BR4
Battle River G5 - BR5

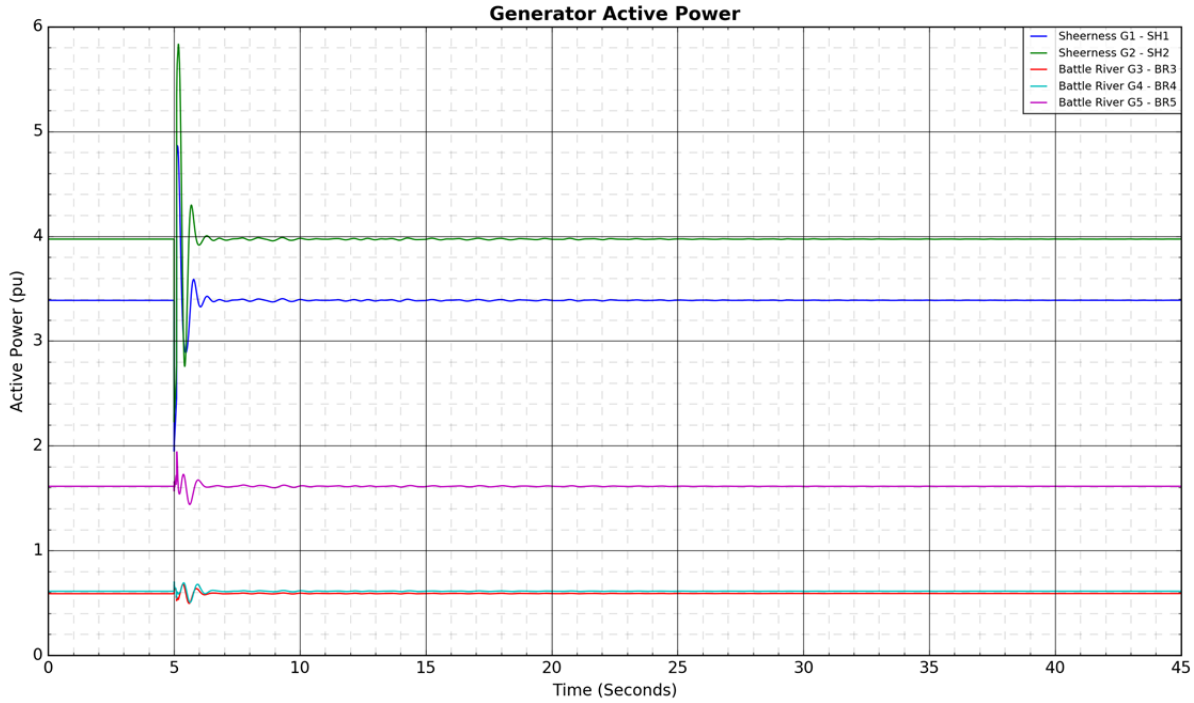
Generator Active Power
Active Power (pu)
Time (Seconds)
Sheerness G1 - SH1
Sheerness G2 - SH2
Battle River G3 - BR3
Battle River G4 - BR4
Battle River G5 - BR5

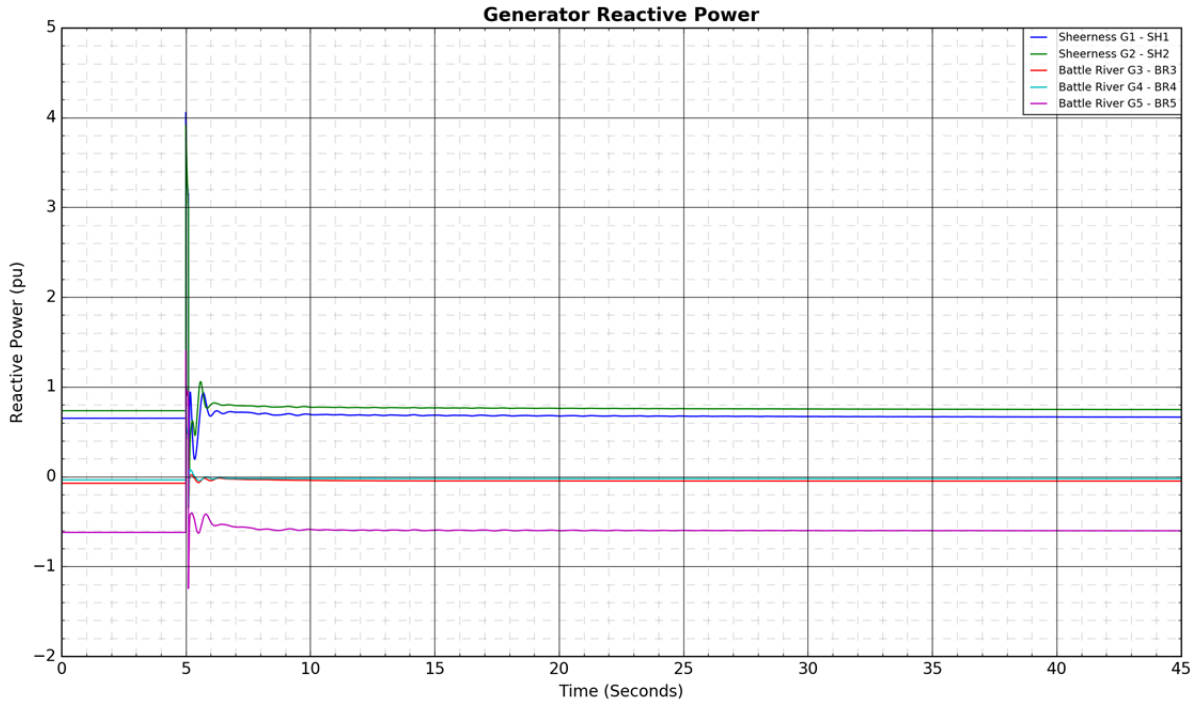
Generator Reactive Power
Sheerness G1 - SH1
Sheerness G2 - SH2
Battle River G3 - BR3
Battle River G4 - BR4
Battle River G5 - BR5
Reactive Power (pu)
Time (Seconds)

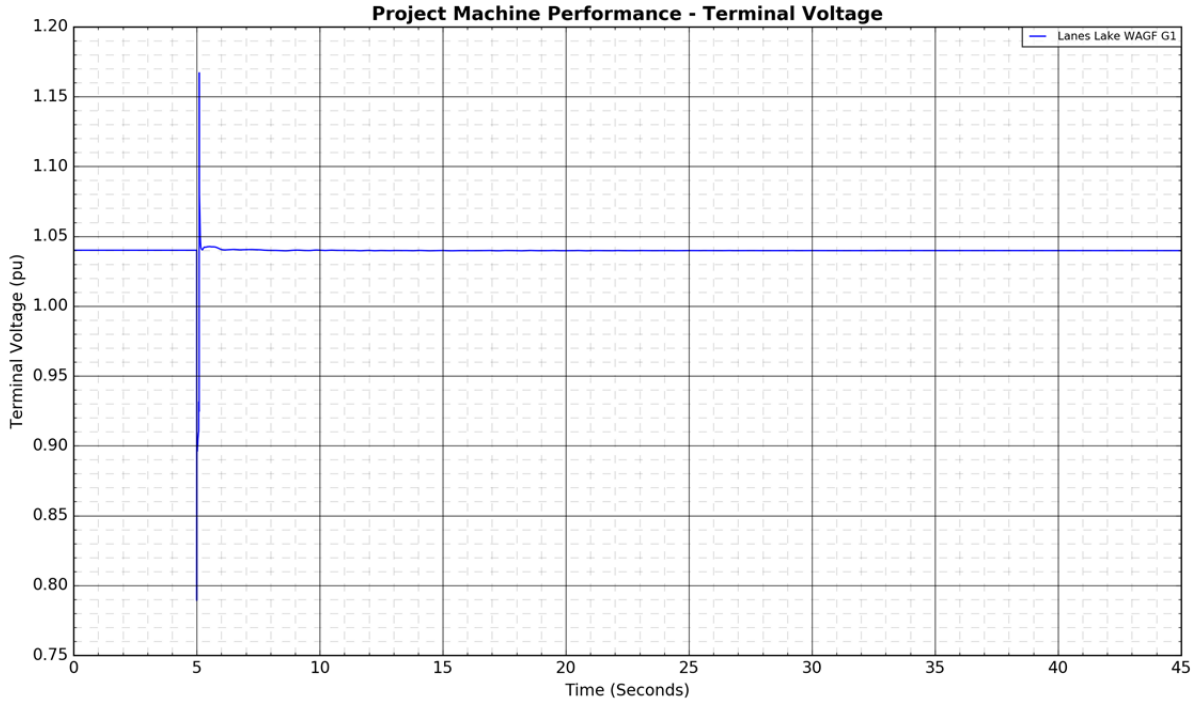
Project Machine Performance - Terminal Voltage
Lanes Lake WAGF G1
Terminal Voltage (pu)
Time (Seconds)


Project Machine Performance - Active Power
Lanes Lake WAGF G1
Active Power (pu)
1.9
1.8
1.7
1.6
1.5
1.4
1.3
1.2
1.1
0
5
10
15
20
25
30
35
40
45
Time (Seconds)

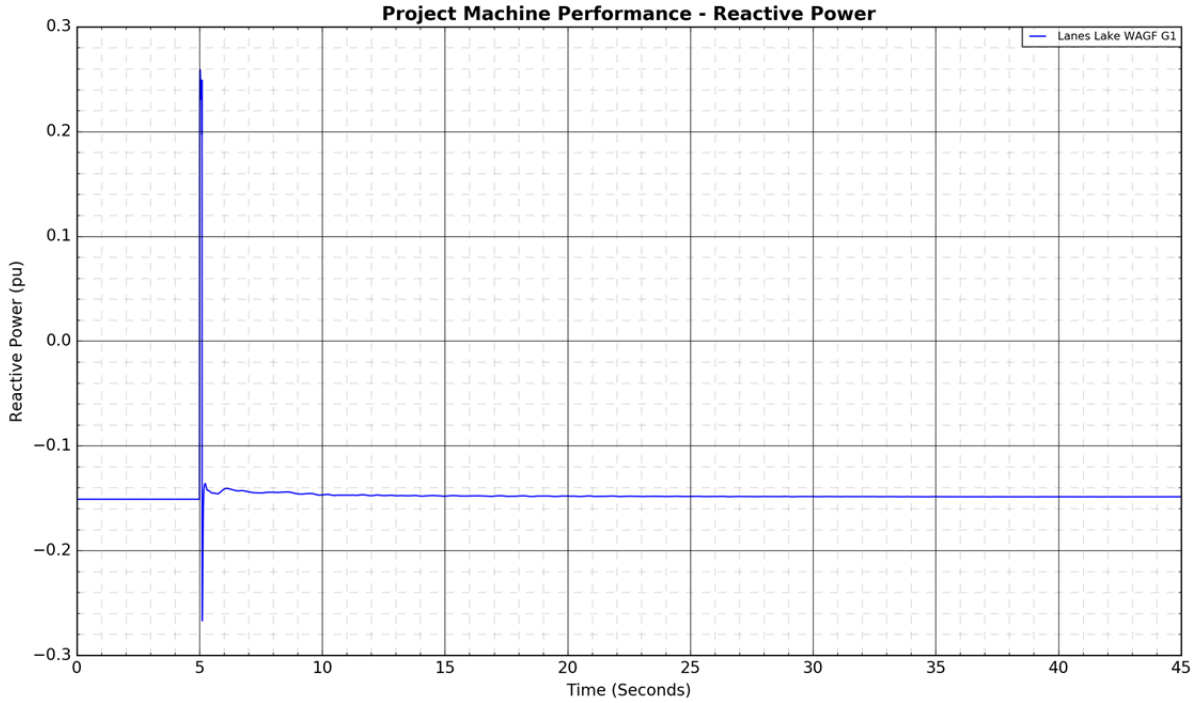
Project Machine Performance - Reactive Power
Lanes Lake WAGF G1
Reactive Power (pu)
0.3
0.2
0.1
0.0
−0.1
−0.2
−0.3
0
5
10
15
20
25
30
35
40
45
Time (Seconds)

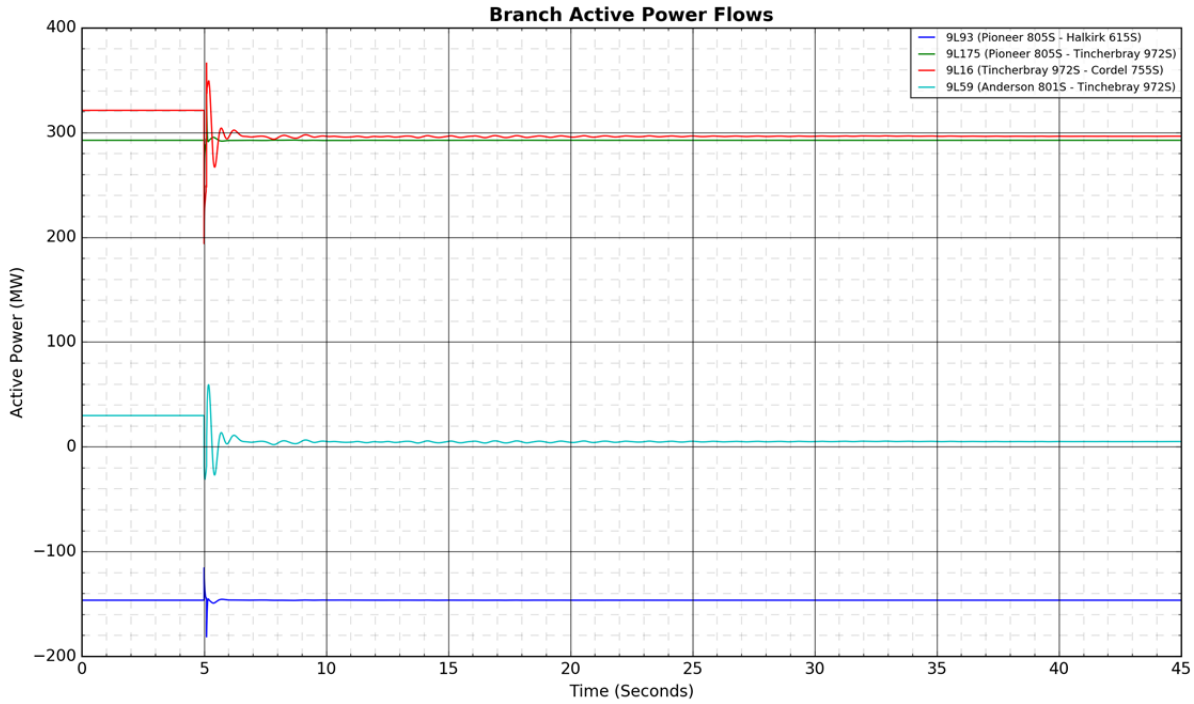
Branch Active Power Flows
9L93 (Pioneer 805S - Halkirk 615S)
9L175 (Pioneer 805S - Tincherbray 972S)
9L16 (Tincherbray 972S - Cordel 755S)
9L59 (Anderson 801S - Tinchebray 972S)
Active Power (MW)
Time (Seconds)

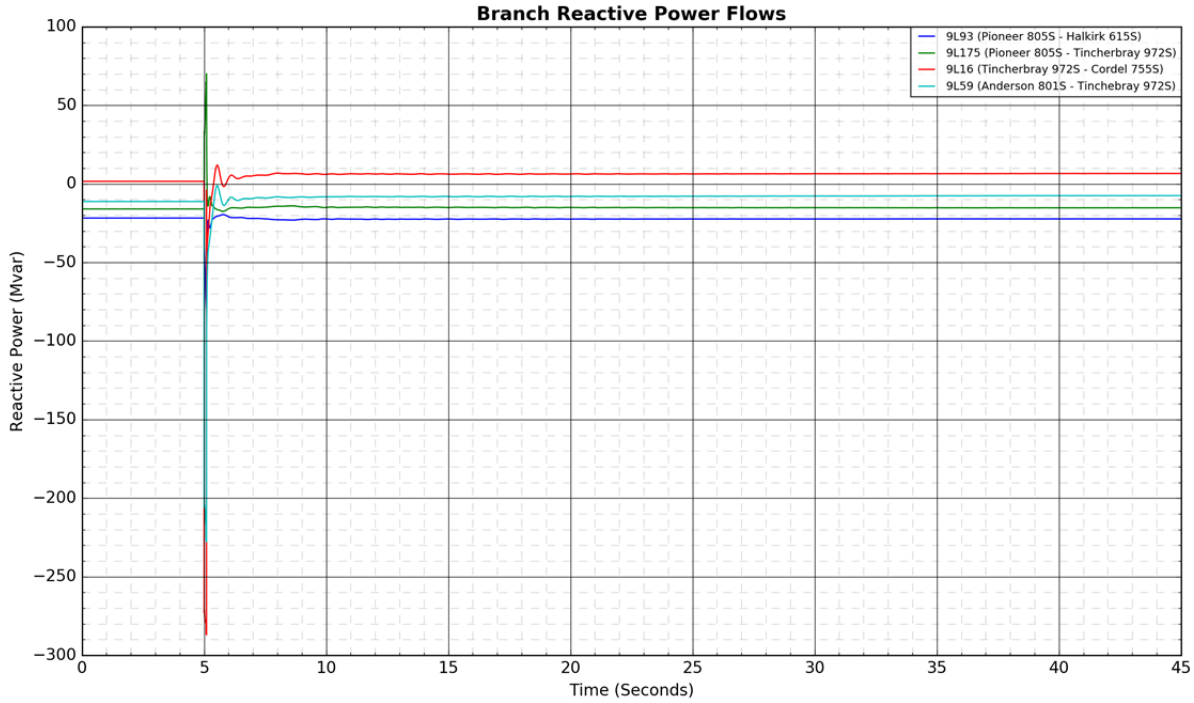
Branch Reactive Power Flows
9L93 (Pioneer 805S - Halkirk 615S)
9L175 (Pioneer 805S - Tincherbray 972S)
9L16 (Tincherbray 972S - Cordel 755S)
9L59 (Anderson 801S - Tinchebray 972S)
Reactive Power (Mvar)
Time (Seconds)

Figure A4-47: 9L20 (Cordel 755S - Nevis 766S): 3-phase fault at Cordel 755S



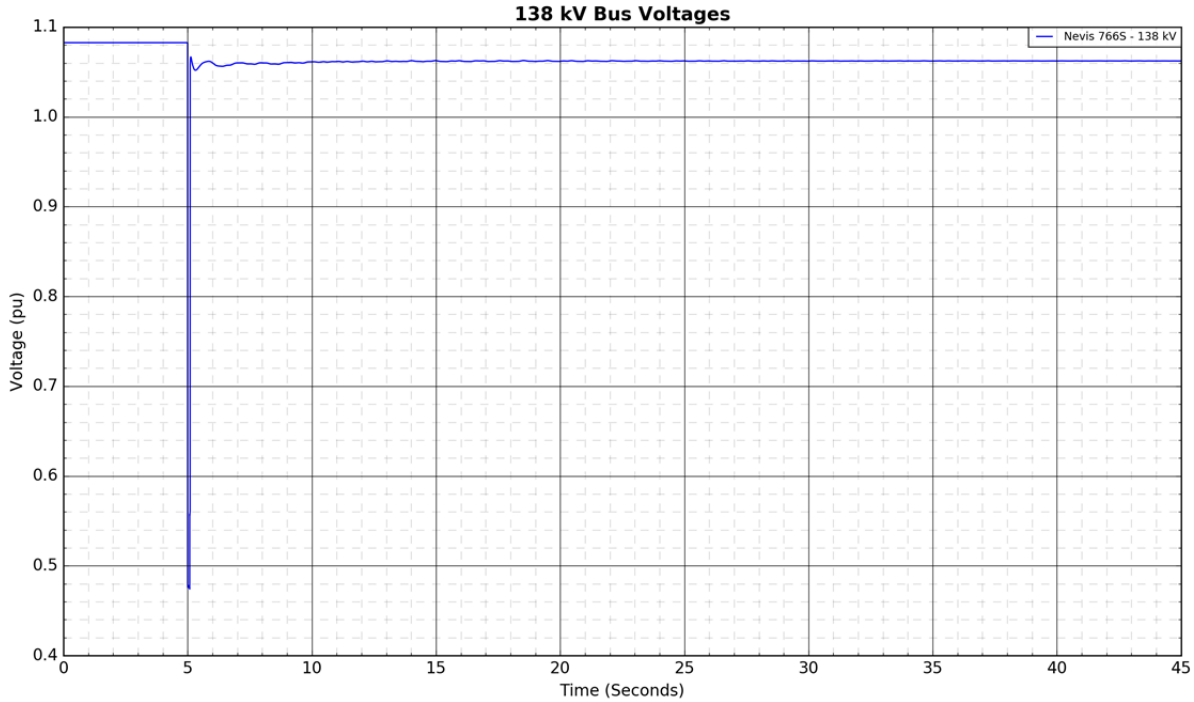

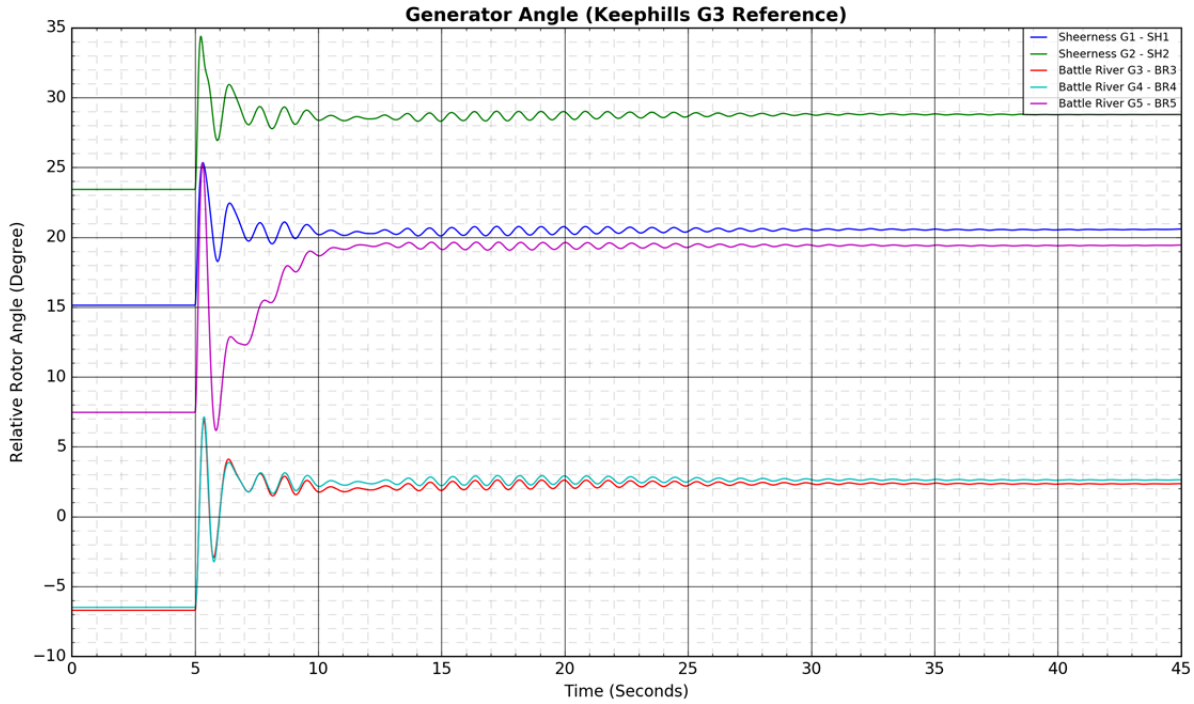
Generator Angle (Keephills G3 Reference)
Relative Rotor Angle (Degree)
Time (Seconds)
Sheerness G1 - SH1
Sheerness G2 - SH2
Battle River G3 - BR3
Battle River G4 - BR4
Battle River G5 - BR5

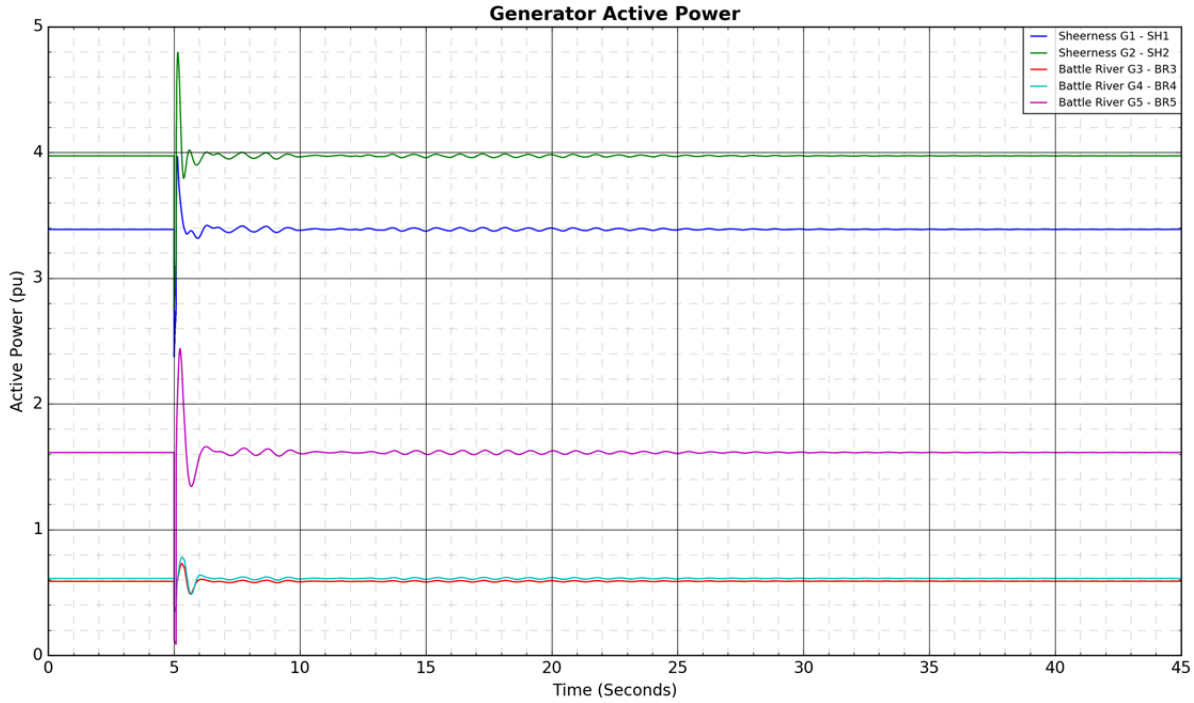
Generator Active Power
Active Power (pu)
Time (Seconds)
Sheerness G1 - SH1
Sheerness G2 - SH2
Battle River G3 - BR3
Battle River G4 - BR4
Battle River G5 - BR5

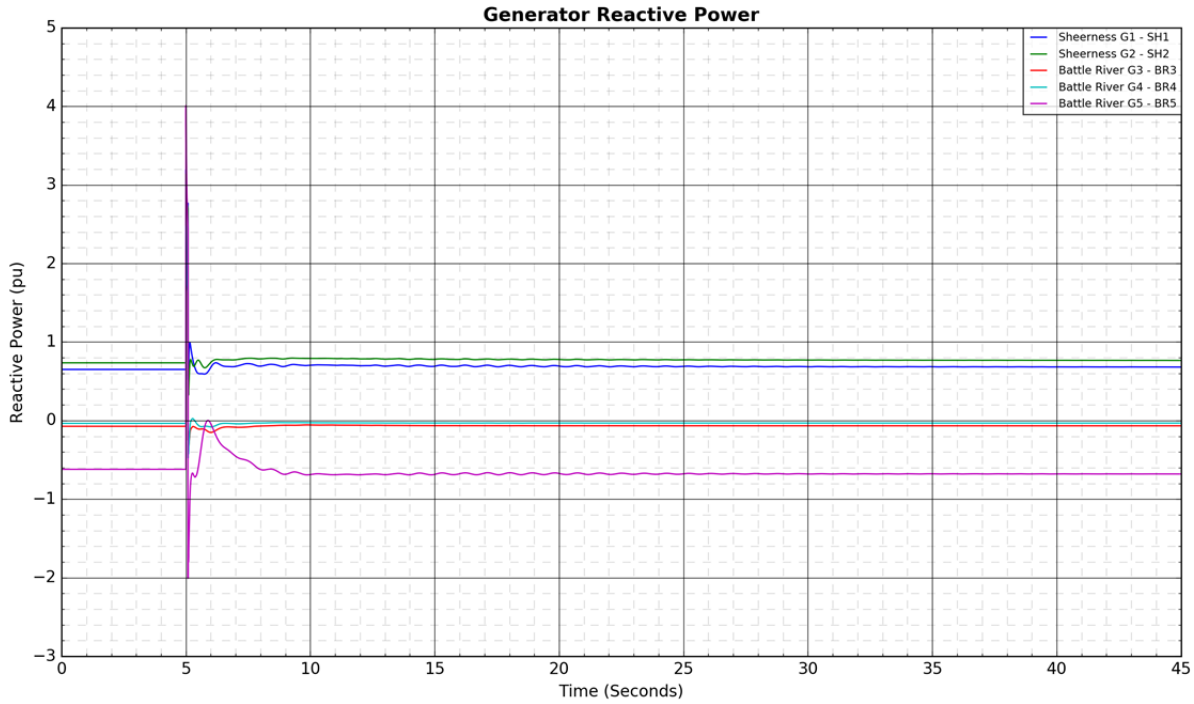
Generator Reactive Power
Sheerness G1 - SH1
Sheerness G2 - SH2
Battle River G3 - BR3
Battle River G4 - BR4
Battle River G5 - BR5
Reactive Power (pu)
Time (Seconds)

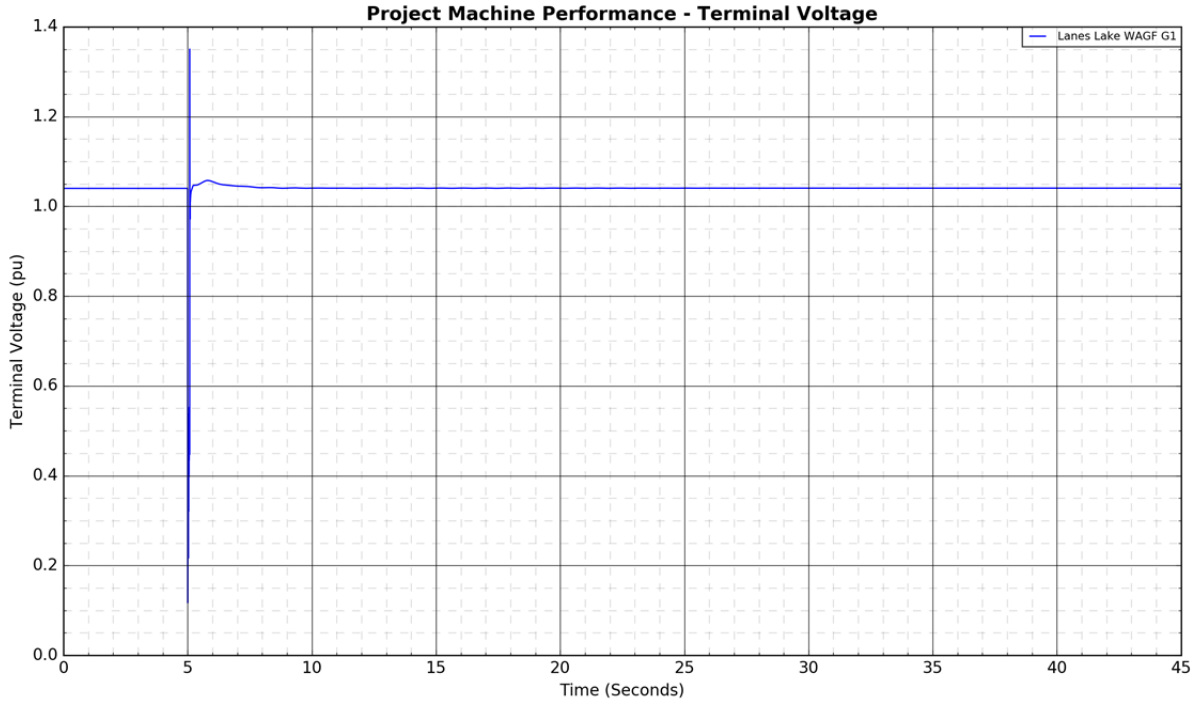
Project Machine Performance - Terminal Voltage
Lanes Lake WAGF G1
Terminal Voltage (pu)
Time (Seconds)


Project Machine Performance - Active Power
Lanes Lake WAGF G1
Active Power (pu)
Time (Seconds)
2.5
2.0
1.5
1.0
0.5
0.0
0
5
10
15
20
25
30
35
40
45

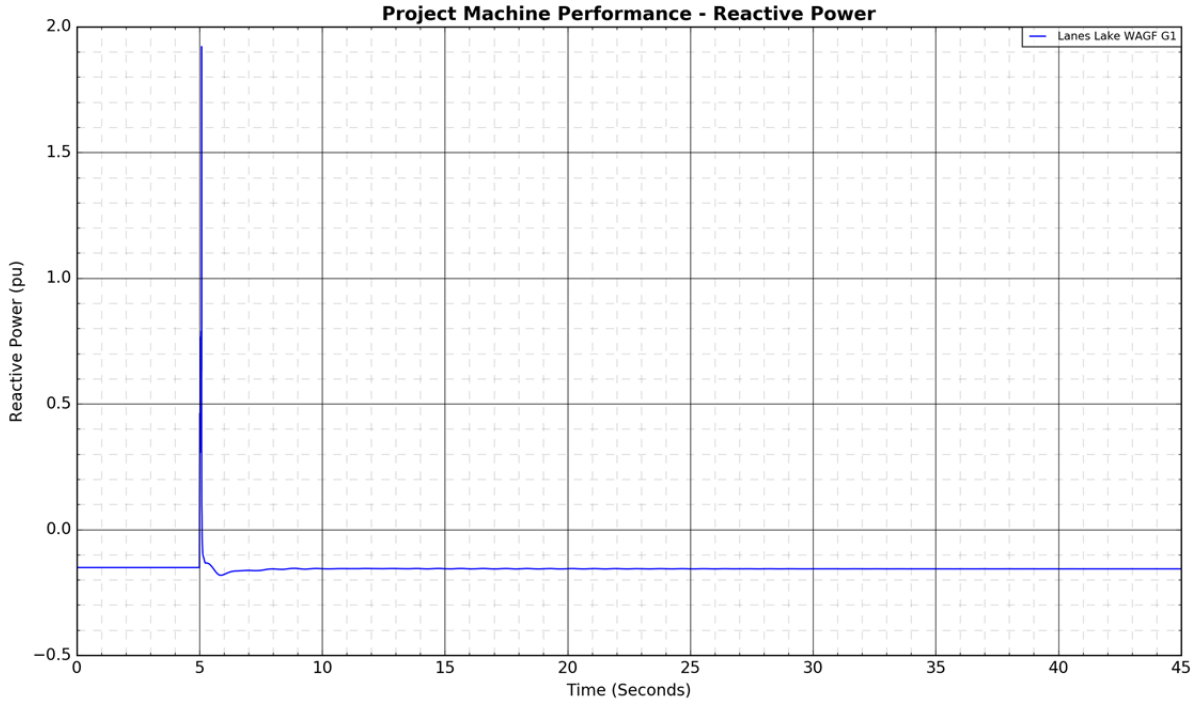
Project Machine Performance - Reactive Power
Lanes Lake WAGF G1
Reactive Power (pu)
Time (Seconds)
2.0
1.5
1.0
0.5
0.0
−0.5
0
5
10
15
20
25
30
35
40
45


Branch Active Power Flows
9L93 (Pioneer 805S - Halkirk 615S)
9L175 (Pioneer 805S - Tincherbray 972S)
9L16 (Tincherbray 972S - Cordel 755S)
9L59 (Anderson 801S - Tinchebray 972S)
Active Power (MW)
Time (Seconds)

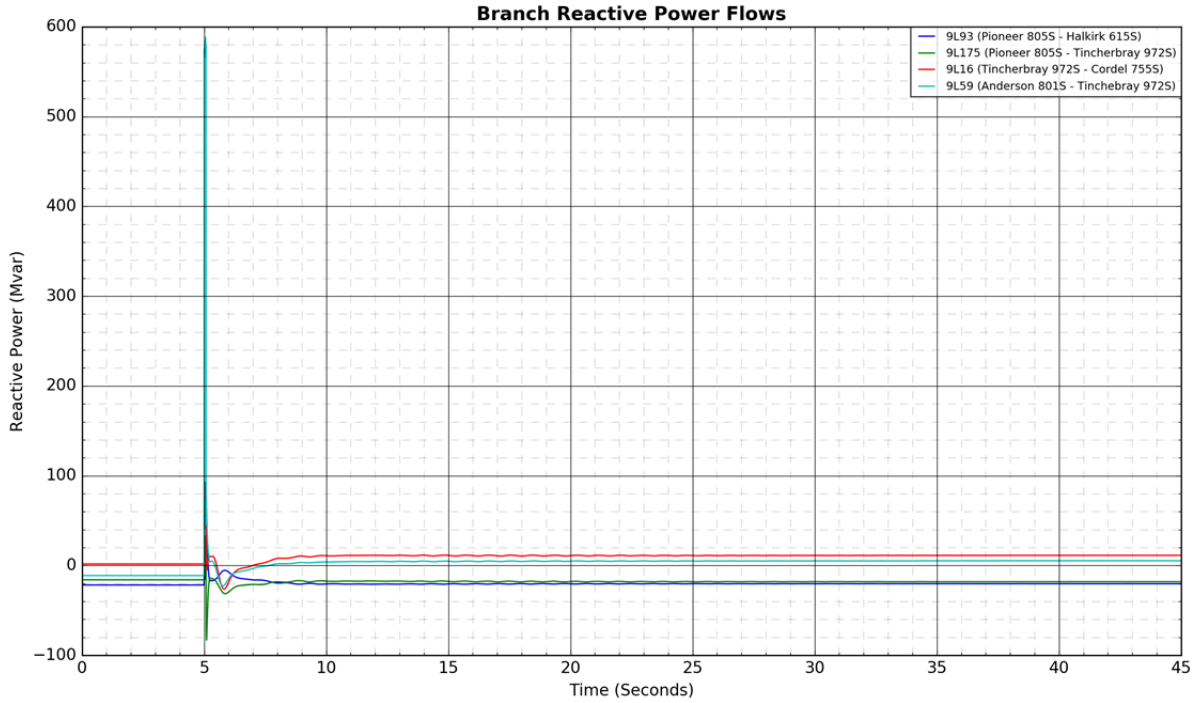
Branch Reactive Power Flows
9L93 (Pioneer 805S - Halkirk 615S)
9L175 (Pioneer 805S - Tincherbray 972S)
9L16 (Tincherbray 972S - Cordel 755S)
9L59 (Anderson 801S - Tinchebray 972S)
Reactive Power (Mvar)
Time (Seconds)

Figure A4-48: 9L20 (Cordel 755S - Nevis 766S): 3-phase fault at Nevis 766S

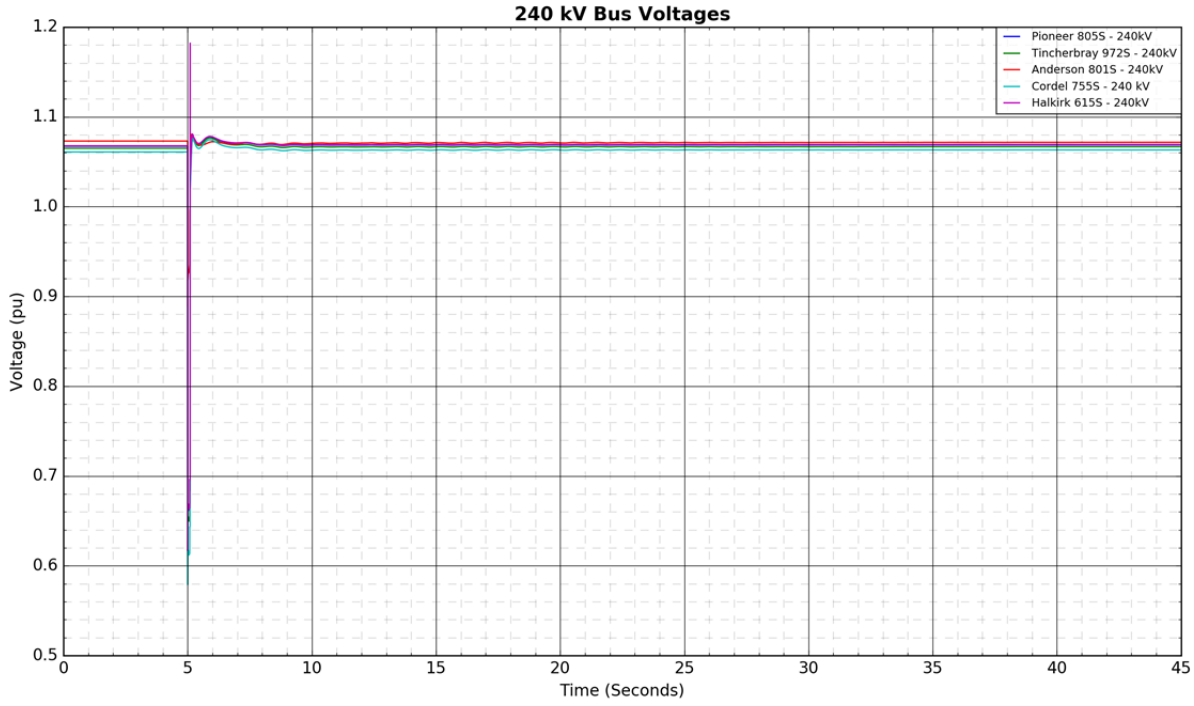

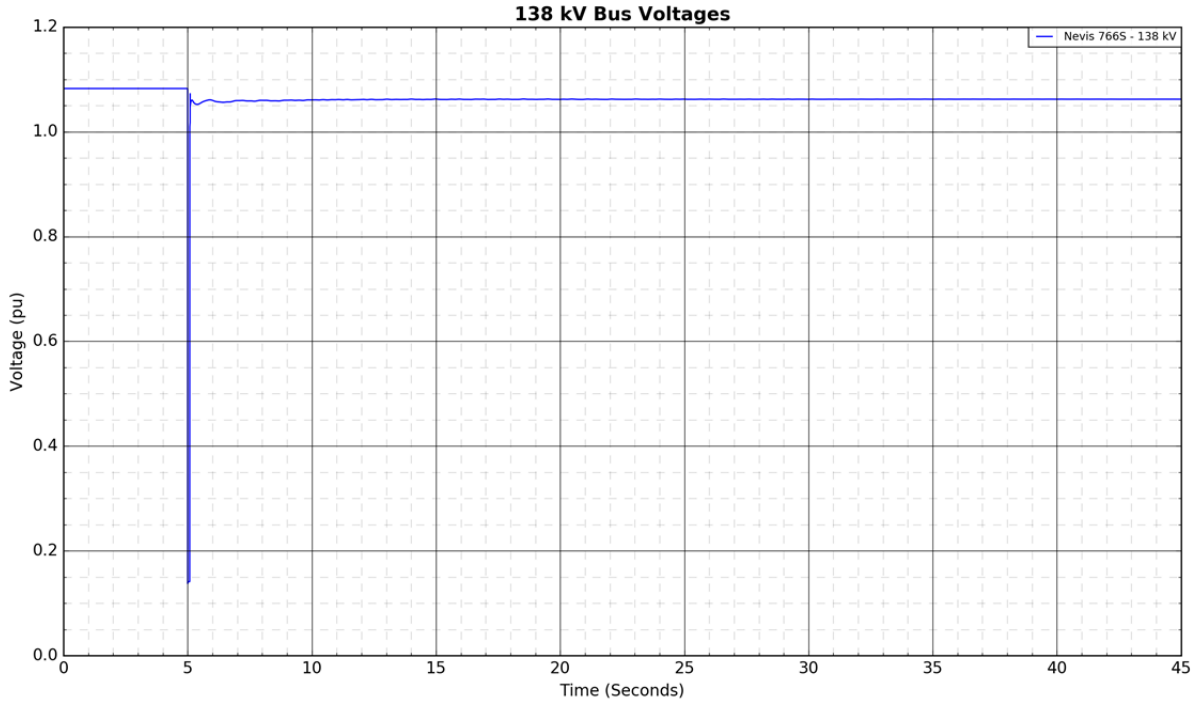

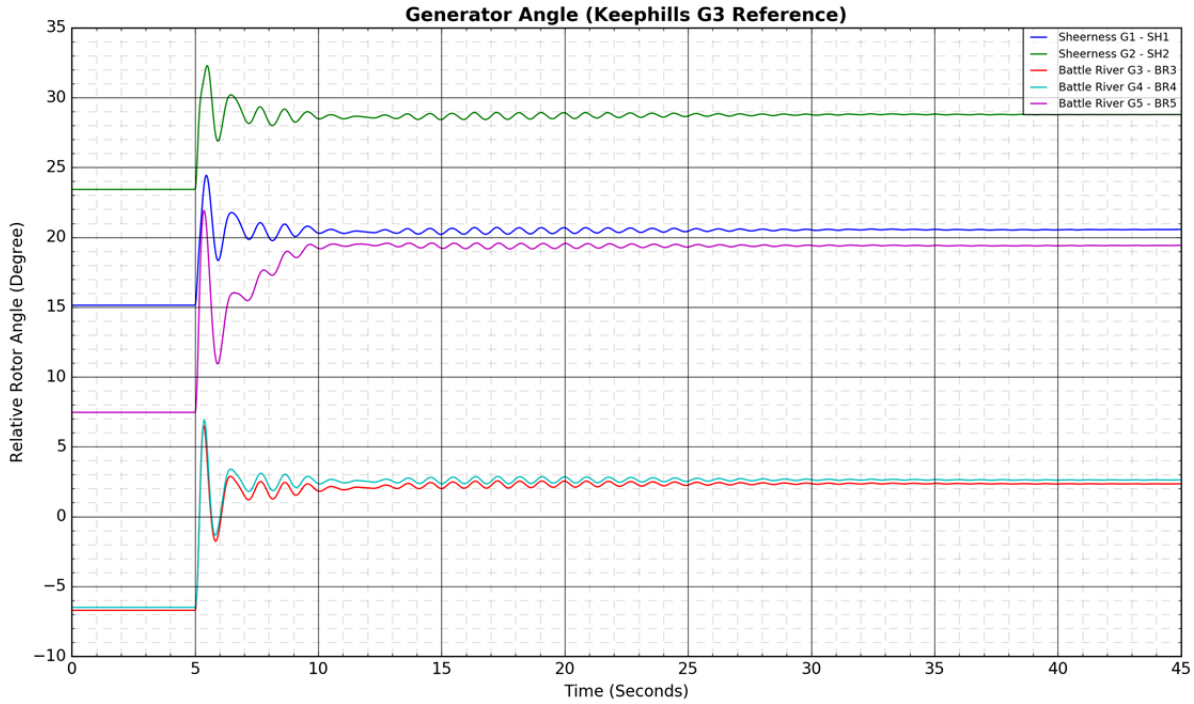
Generator Angle (Keephills G3 Reference)
Relative Rotor Angle (Degree)
Time (Seconds)
Sheerness G1 - SH1
Sheerness G2 - SH2
Battle River G3 - BR3
Battle River G4 - BR4
Battle River G5 - BR5

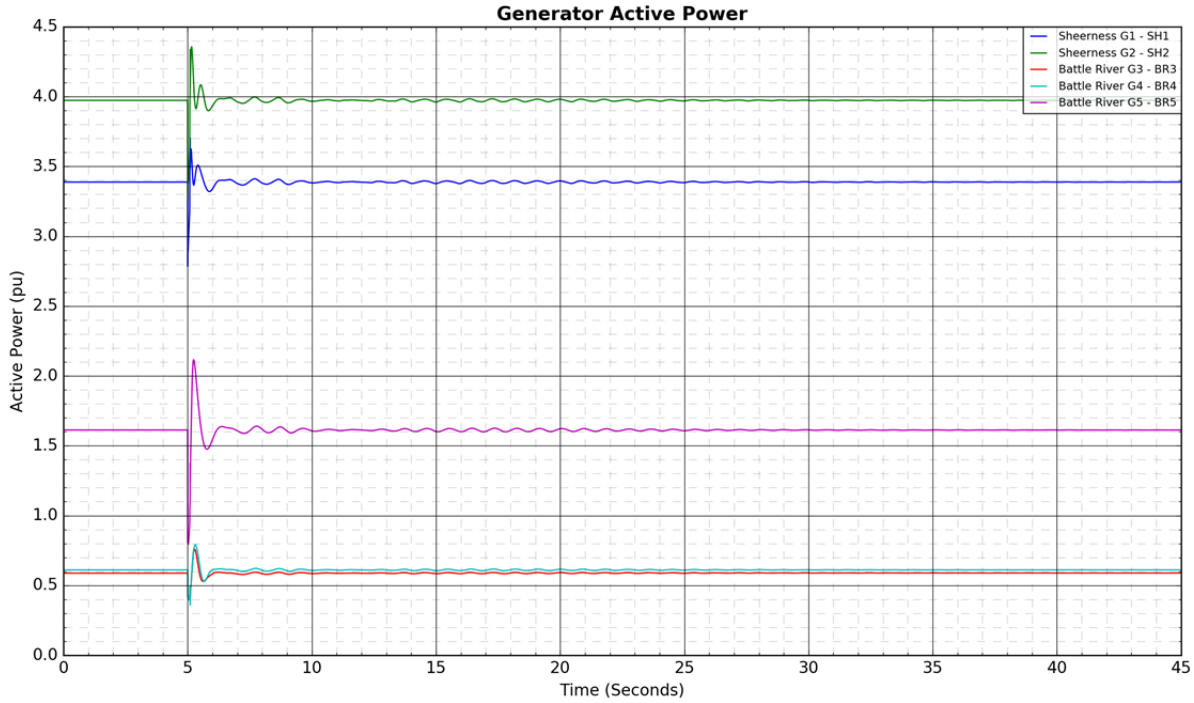
Generator Active Power
Active Power (pu)
Time (Seconds)
Sheerness G1 - SH1
Sheerness G2 - SH2
Battle River G3 - BR3
Battle River G4 - BR4
Battle River G5 - BR5

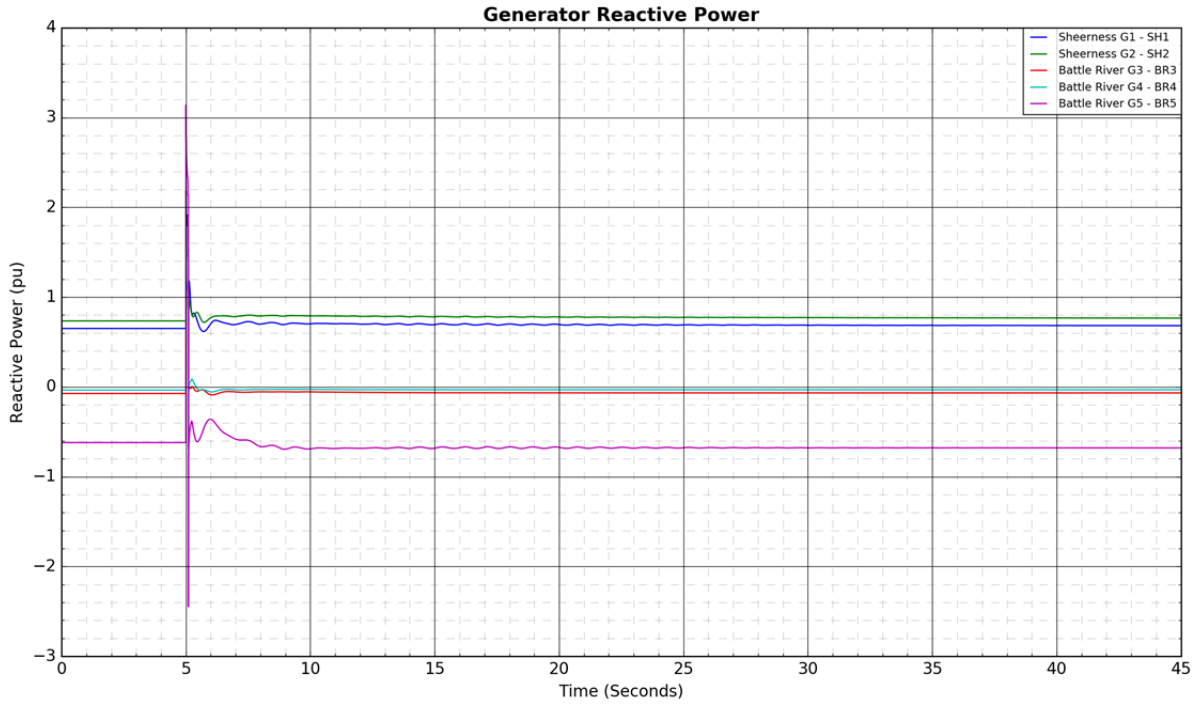
Generator Reactive Power
Sheerness G1 - SH1
Sheerness G2 - SH2
Battle River G3 - BR3
Battle River G4 - BR4
Battle River G5 - BR5
Reactive Power (pu)
Time (Seconds)

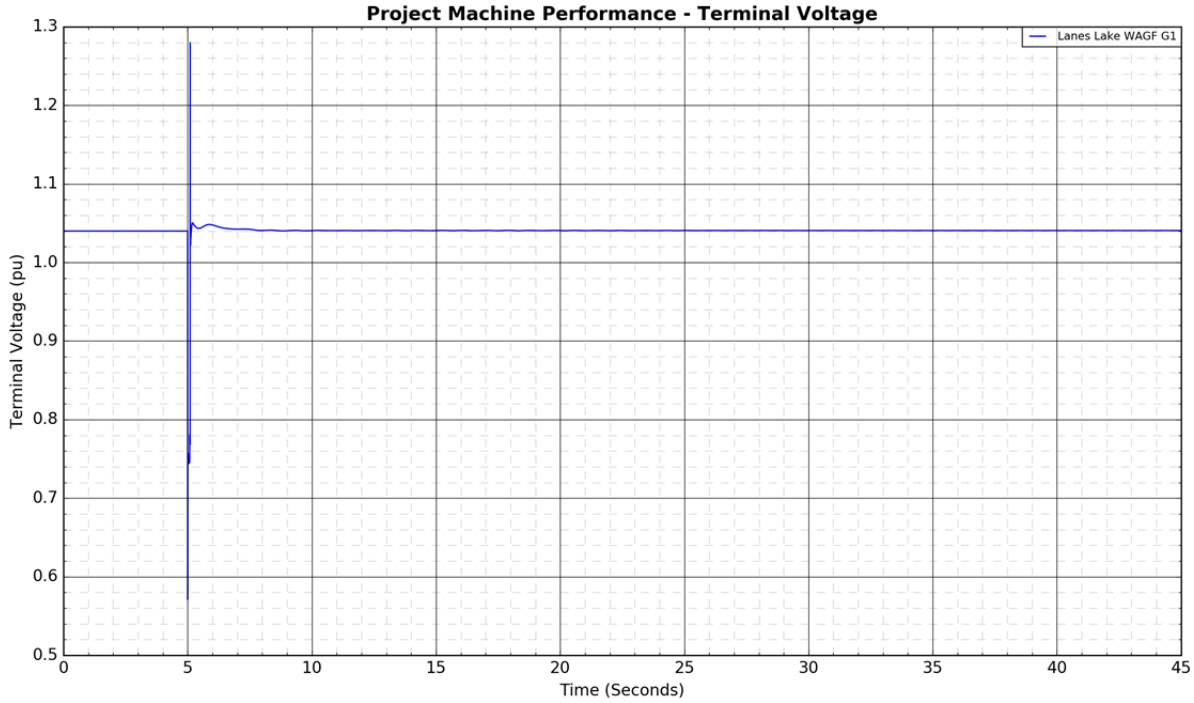
Project Machine Performance - Terminal Voltage
Lanes Lake WAGF G1
Terminal Voltage (pu)
Time (Seconds)


Project Machine Performance - Active Power
Lanes Lake WAGF G1
Active Power (pu)
Time (Seconds)
2.6
2.4
2.2
2.0
1.8
1.6
1.4
1.2
1.0
0.8
0
5
10
15
20
25
30
35
40
45

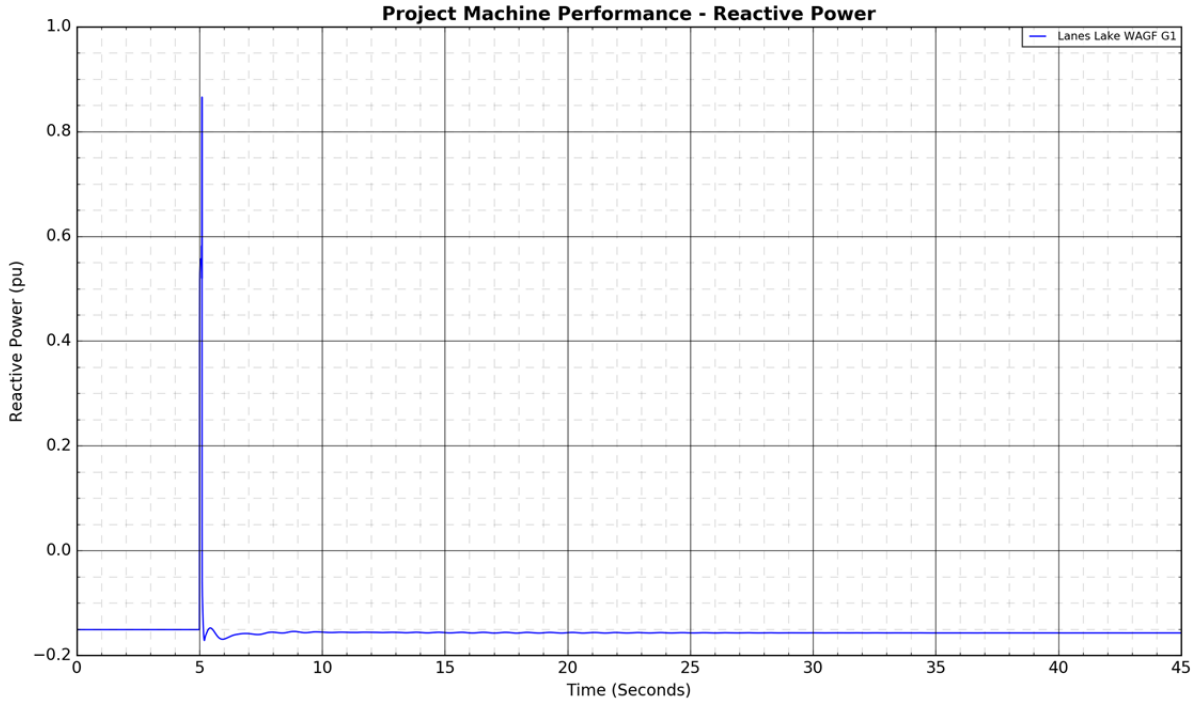
Project Machine Performance - Reactive Power
Lanes Lake WAGF G1
Reactive Power (pu)
Time (Seconds)
1.0
0.8
0.6
0.4
0.2
0.0
−0.2
0
5
10
15
20
25
30
35
40
45


Branch Active Power Flows
9L93 (Pioneer 805S - Halkirk 615S)
9L175 (Pioneer 805S - Tincherbray 972S)
9L16 (Tincherbray 972S - Cordel 755S)
9L59 (Anderson 801S - Tinchebray 972S)
Active Power (MW)
Time (Seconds)

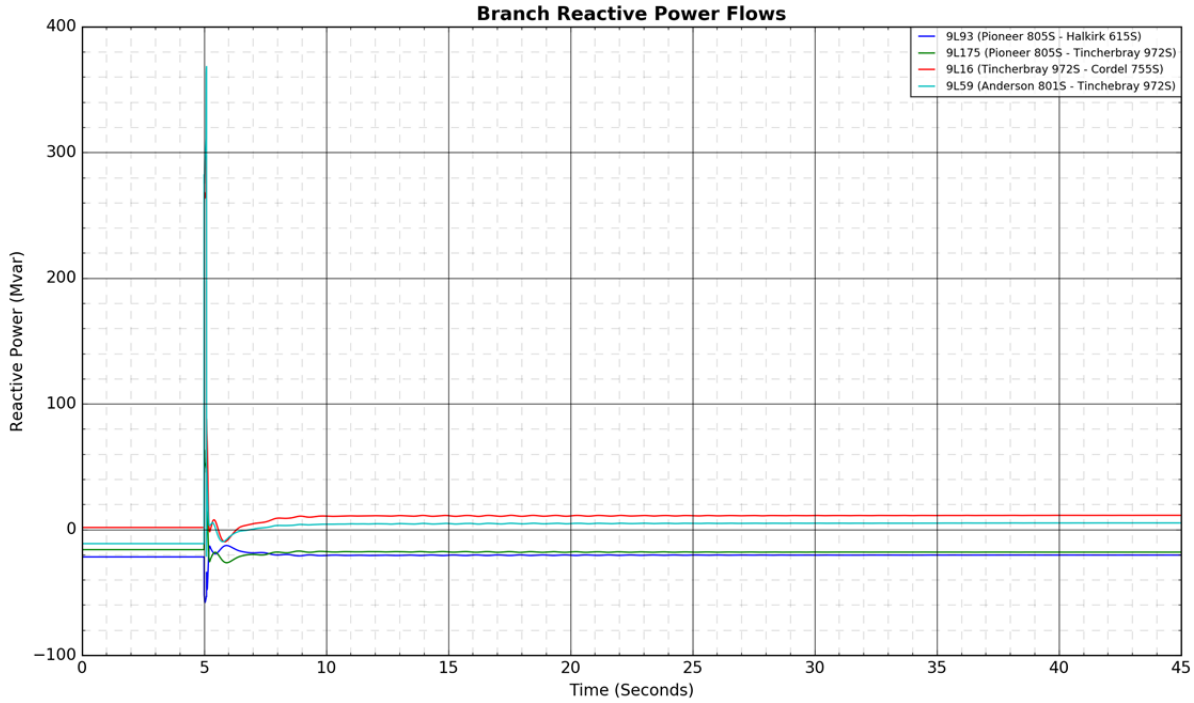
Branch Reactive Power Flows
9L93 (Pioneer 805S - Halkirk 615S)
9L175 (Pioneer 805S - Tincherbray 972S)
9L16 (Tincherbray 972S - Cordel 755S)
9L59 (Anderson 801S - Tinchebray 972S)
Reactive Power (Mvar)
Time (Seconds)

Figure A4-49: 9L16 (Tinchebray 972S - Cordel 755S): 3-phase fault at Cordel 755S

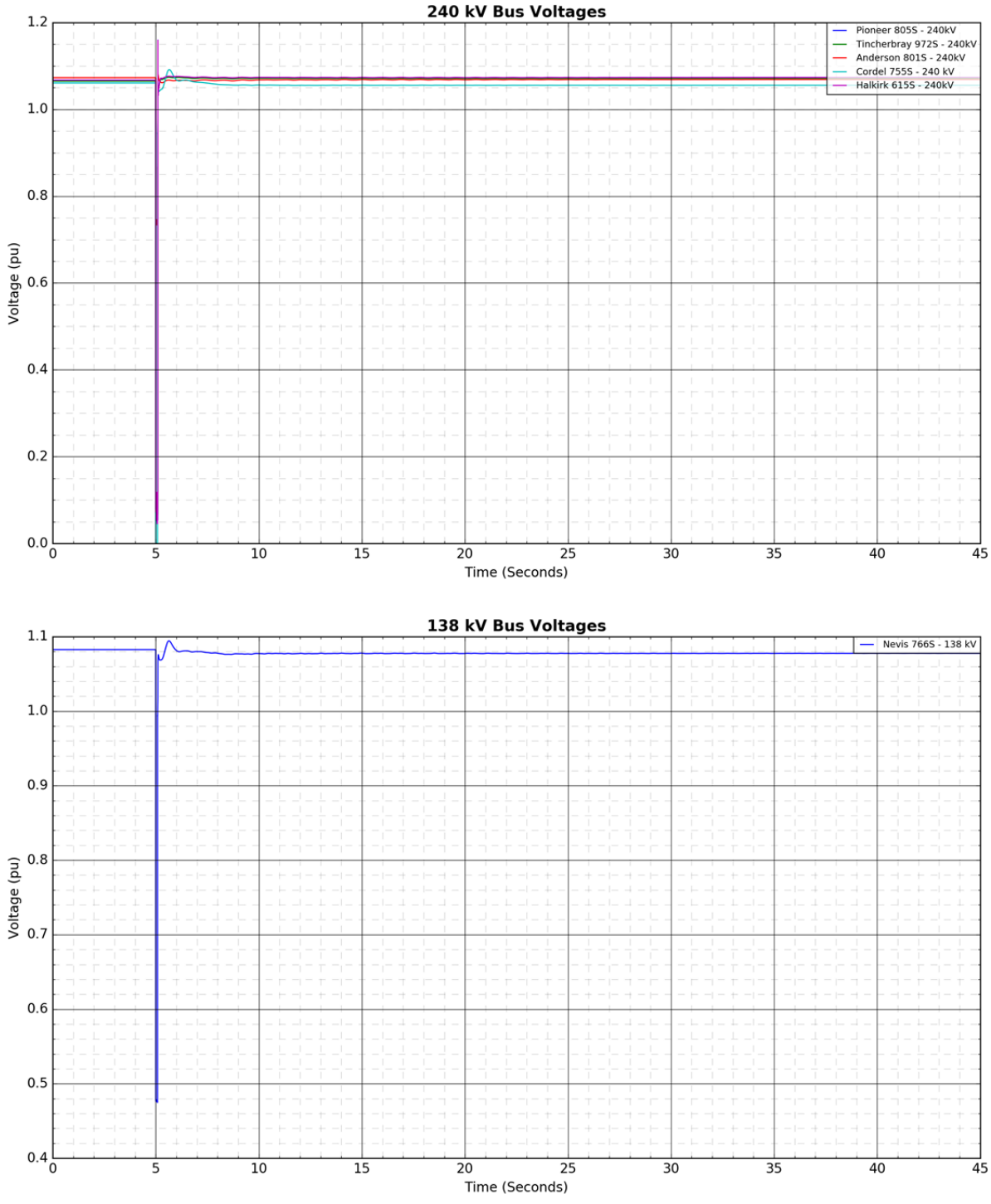

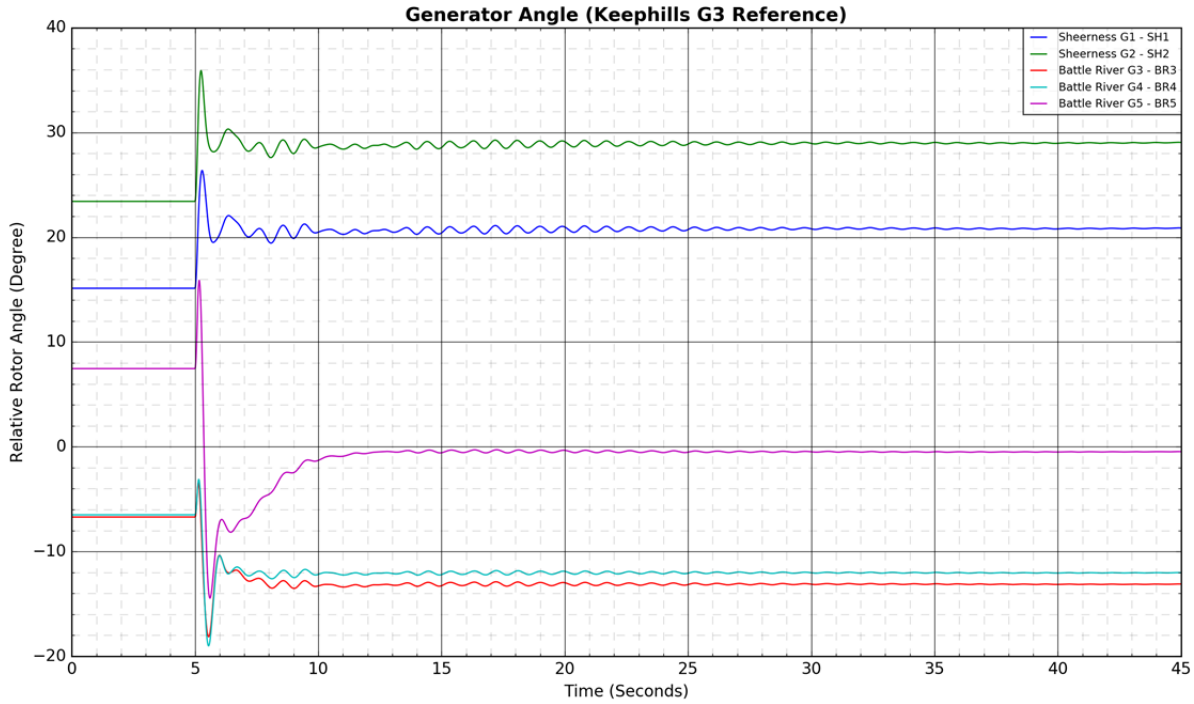
Generator Angle (Keephills G3 Reference)
Relative Rotor Angle (Degree)
Time (Seconds)
Sheerness G1 - SH1
Sheerness G2 - SH2
Battle River G3 - BR3
Battle River G4 - BR4
Battle River G5 - BR5

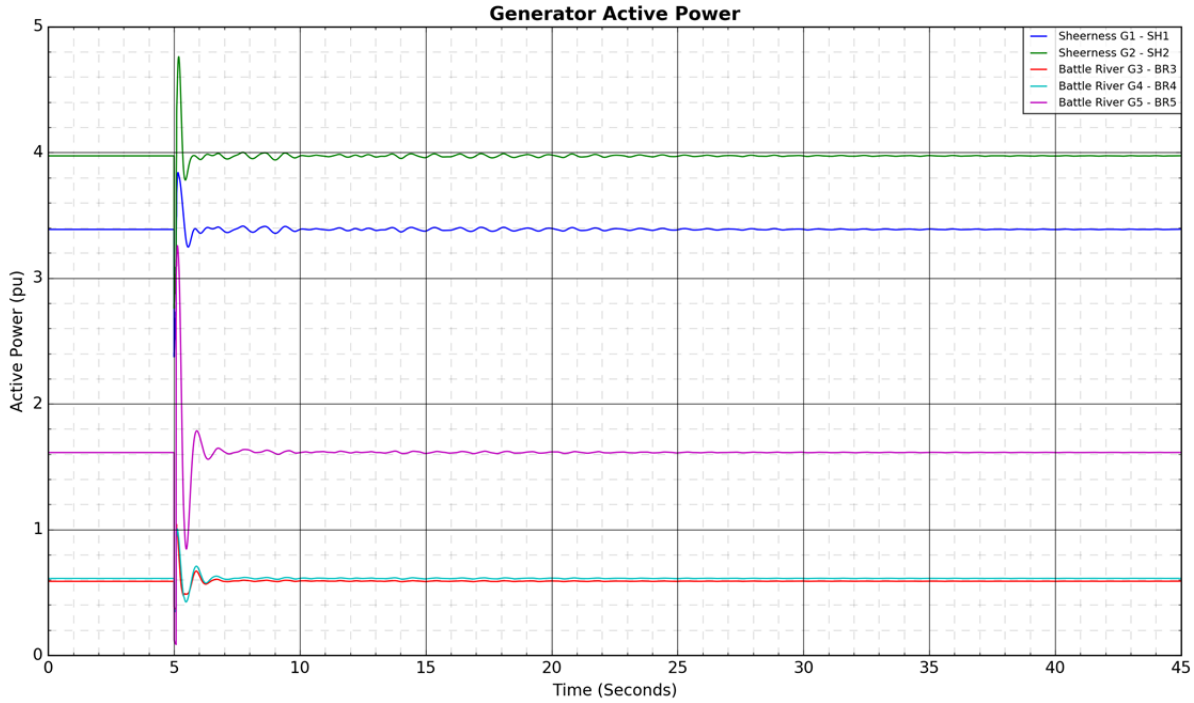
Generator Active Power
Active Power (pu)
Time (Seconds)
Sheerness G1 - SH1
Sheerness G2 - SH2
Battle River G3 - BR3
Battle River G4 - BR4
Battle River G5 - BR5

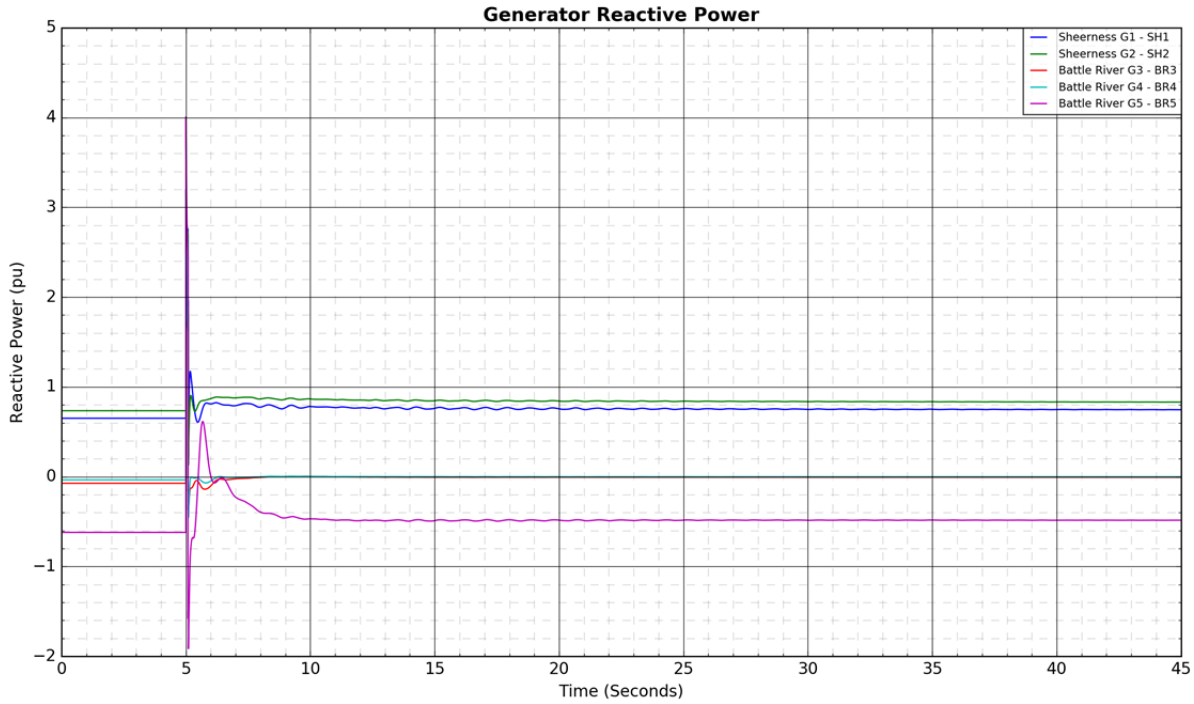
Generator Reactive Power
Sheerness G1 - SH1
Sheerness G2 - SH2
Battle River G3 - BR3
Battle River G4 - BR4
Battle River G5 - BR5
Reactive Power (pu)
Time (Seconds)

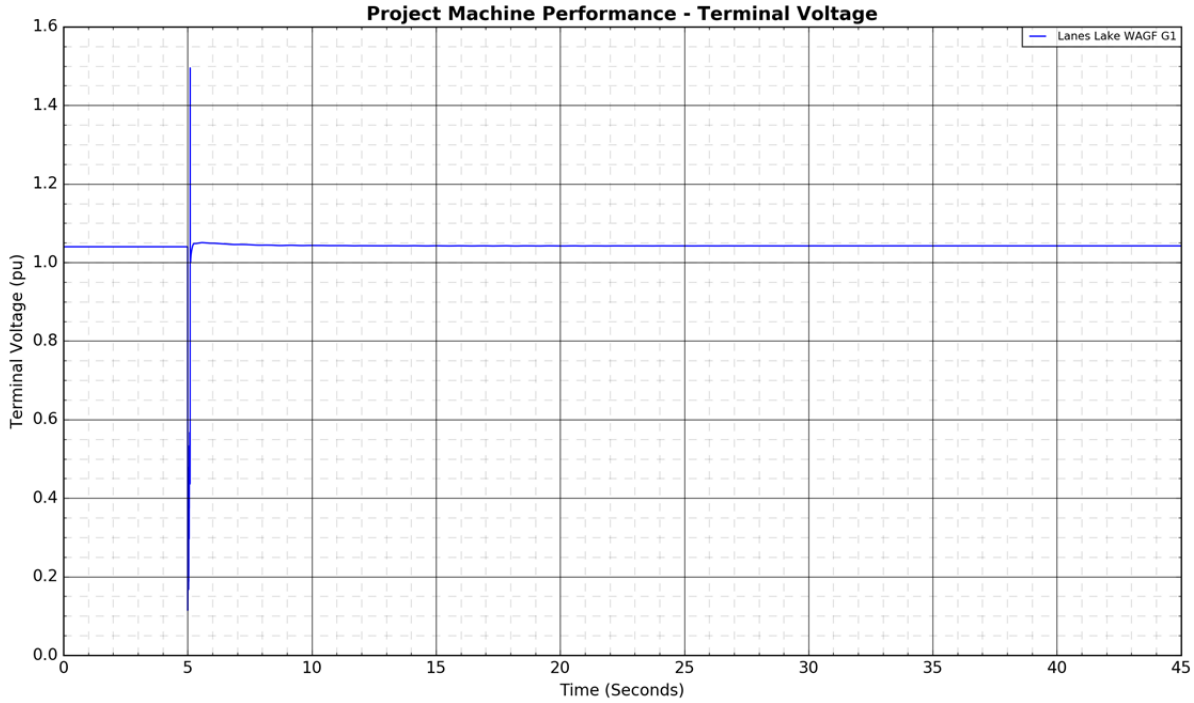
Project Machine Performance - Terminal Voltage
Lanes Lake WAGF G1
Terminal Voltage (pu)
Time (Seconds)


Project Machine Performance - Active Power
Lanes Lake WAGF G1
Active Power (pu)
Time (Seconds)
2.5
2.0
1.5
1.0
0.5
0.0
0
5
10
15
20
25
30
35
40
45

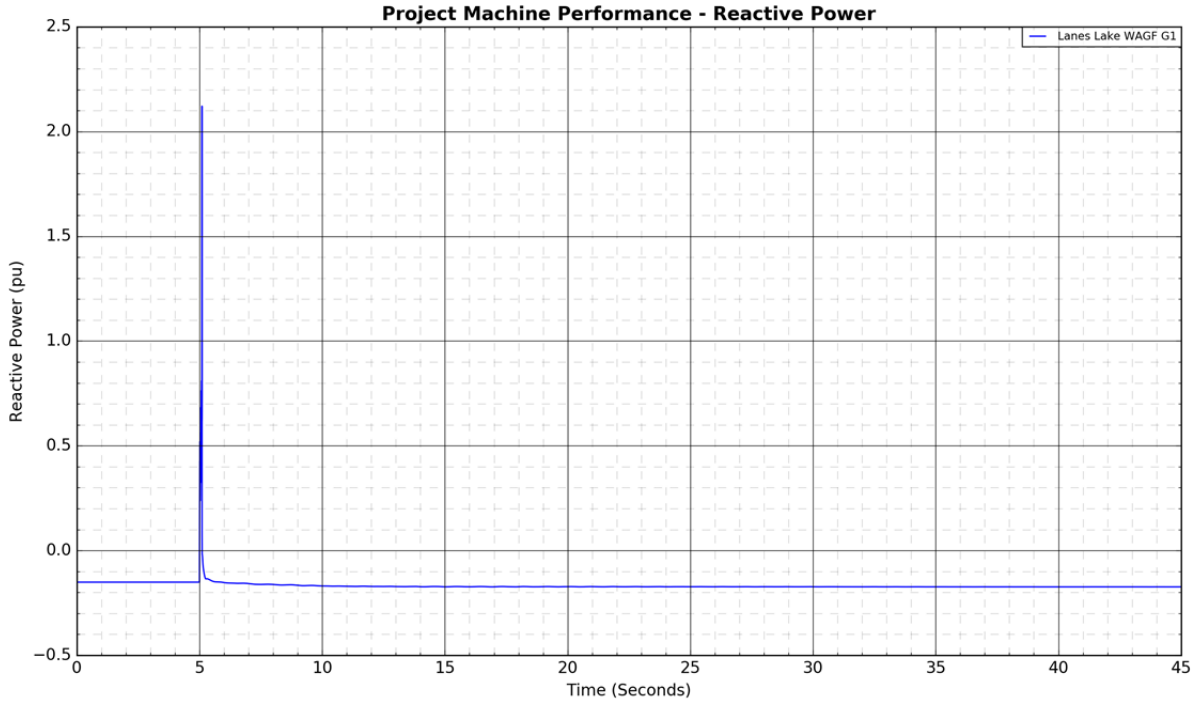
Project Machine Performance - Reactive Power
Lanes Lake WAGF G1
Reactive Power (pu)
Time (Seconds)
2.5
2.0
1.5
1.0
0.5
0.0
−0.5
0
5
10
15
20
25
30
35
40
45

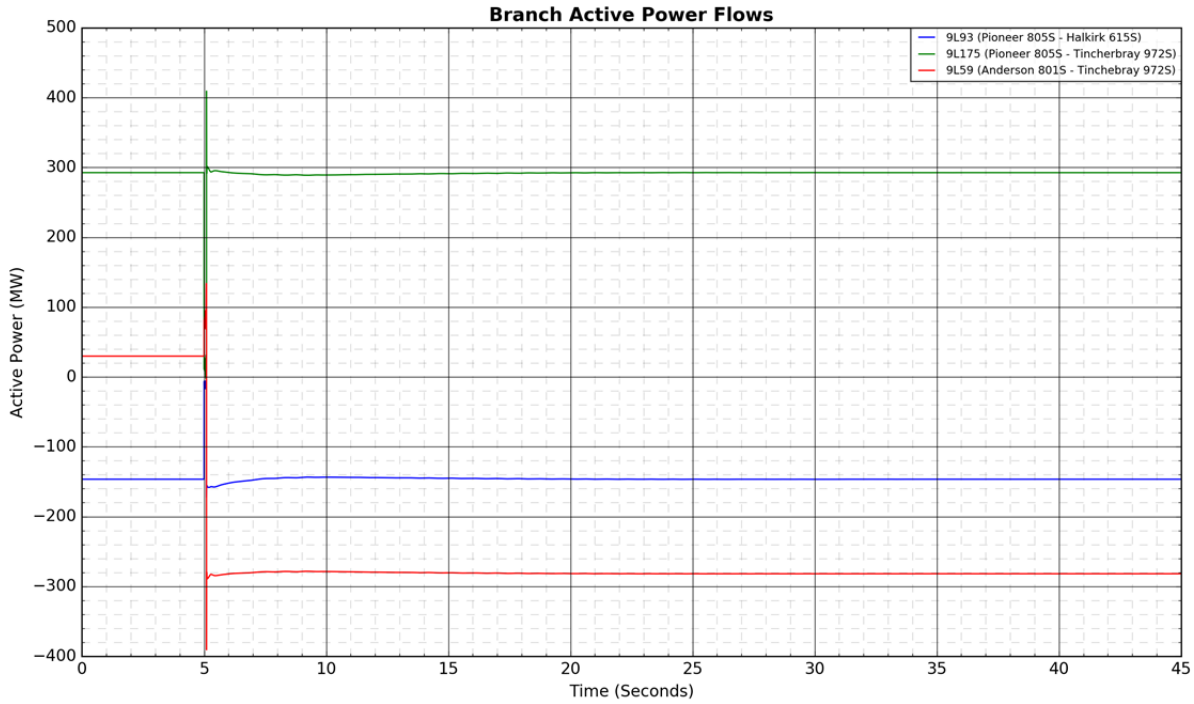
Branch Active Power Flows
9L93 (Pioneer 805S - Halkirk 615S)
9L175 (Pioneer 805S - Tincherbray 972S)
9L59 (Anderson 801S - Tinchebray 972S)
Active Power (MW)
Time (Seconds)

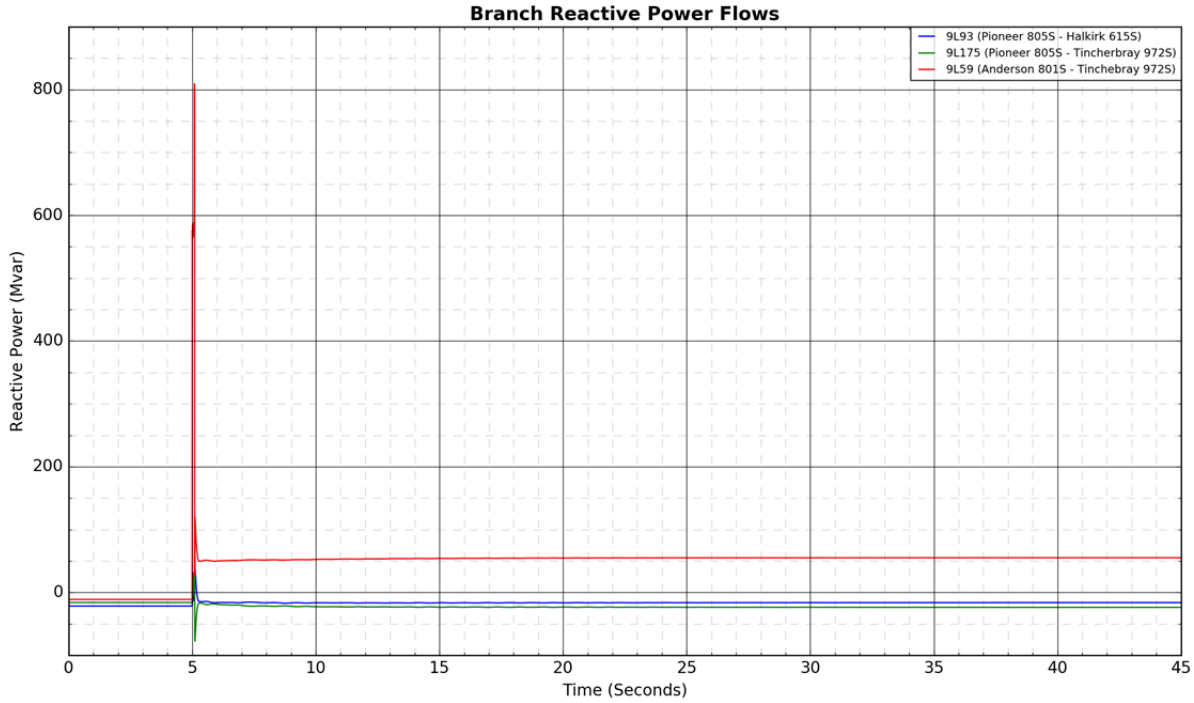
Branch Reactive Power Flows
9L93 (Pioneer 805S - Halkirk 615S)
9L175 (Pioneer 805S - Tincherbray 972S)
9L59 (Anderson 801S - Tinchebray 972S)
Reactive Power (Mvar)
Time (Seconds)

Figure A4-50: 9L16 (Tinchebray 972S - Cordel 755S): 3-phase fault at Tinchebray 972S

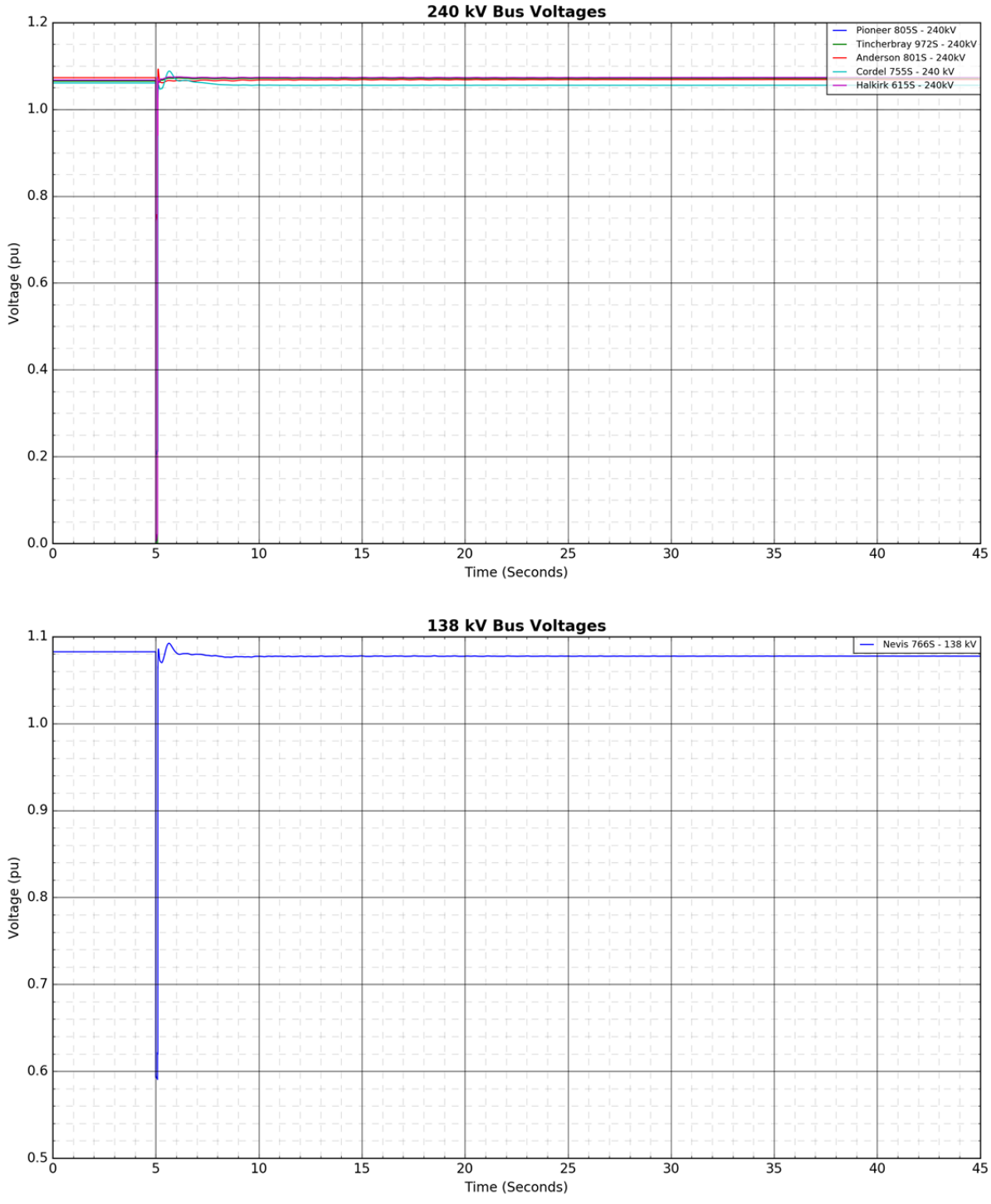

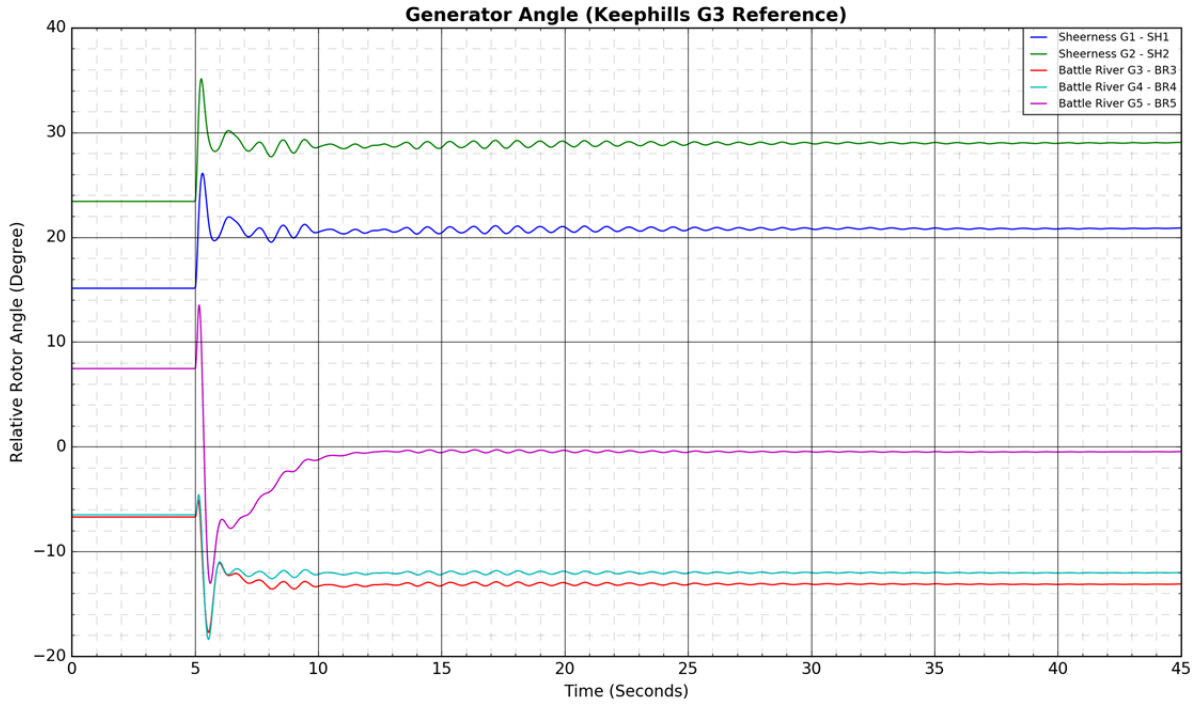
Generator Angle (Keephills G3 Reference)
Relative Rotor Angle (Degree)
Time (Seconds)
Sheerness G1 - SH1
Sheerness G2 - SH2
Battle River G3 - BR3
Battle River G4 - BR4
Battle River G5 - BR5

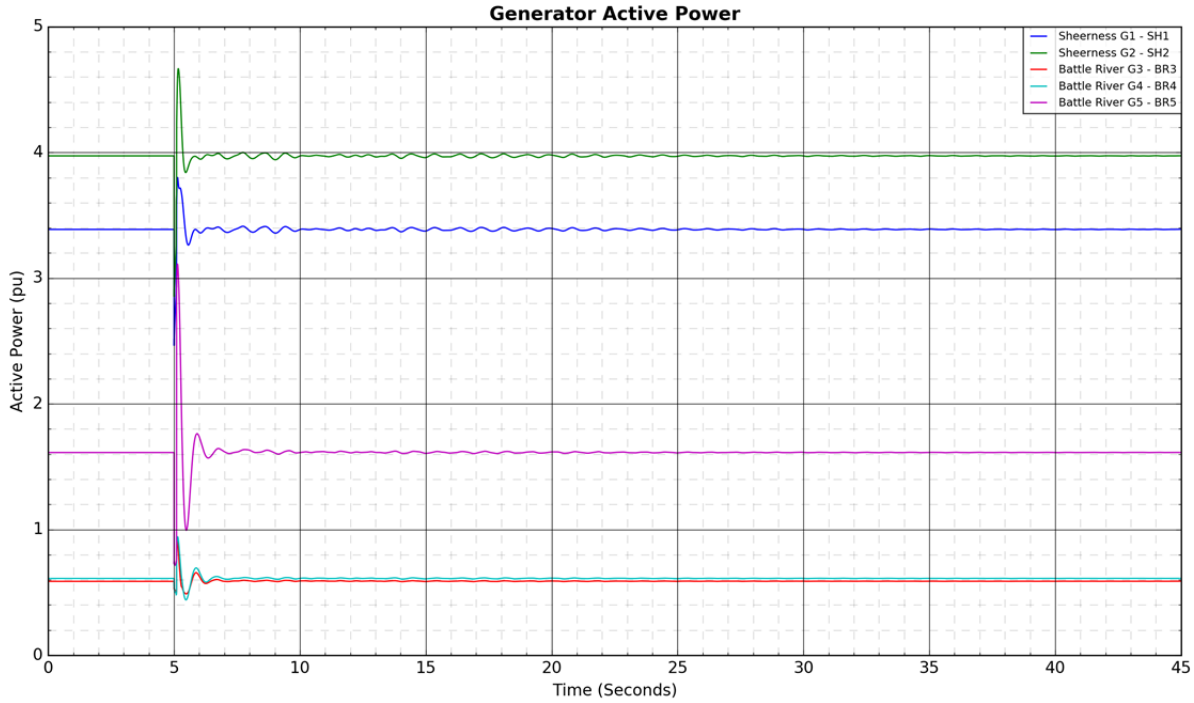
Generator Active Power
Active Power (pu)
Time (Seconds)
Sheerness G1 - SH1
Sheerness G2 - SH2
Battle River G3 - BR3
Battle River G4 - BR4
Battle River G5 - BR5

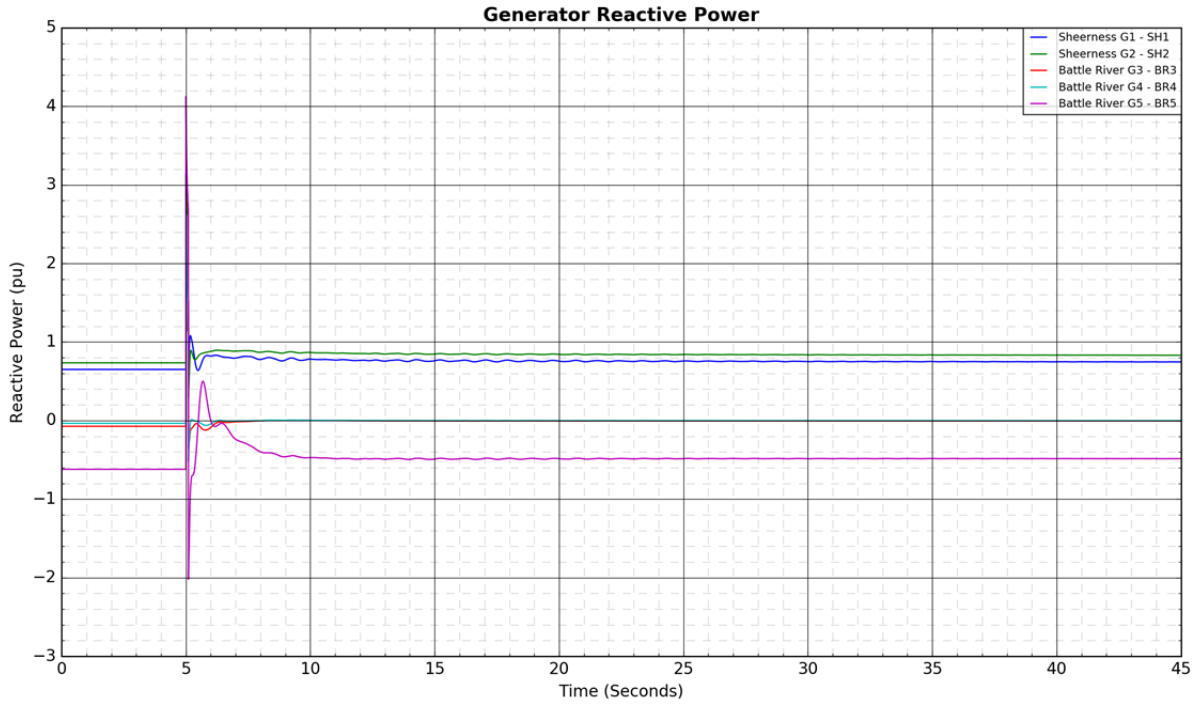
Generator Reactive Power
Sheerness G1 - SH1
Sheerness G2 - SH2
Battle River G3 - BR3
Battle River G4 - BR4
Battle River G5 - BR5
Reactive Power (pu)
Time (Seconds)

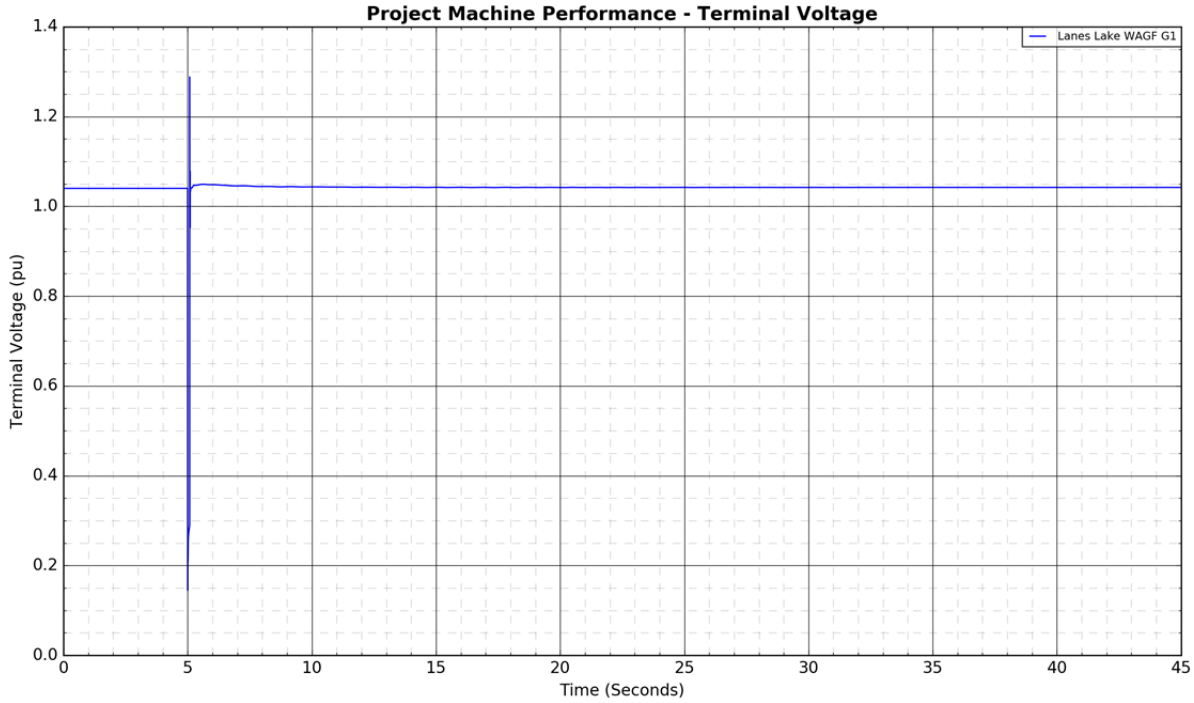
Project Machine Performance - Terminal Voltage
Lanes Lake WAGF G1
Terminal Voltage (pu)
Time (Seconds)


Project Machine Performance - Active Power
Lanes Lake WAGF G1
Active Power (pu)
Time (Seconds)
2.0
1.5
1.0
0.5
0.0
0
5
10
15
20
25
30
35
40
45

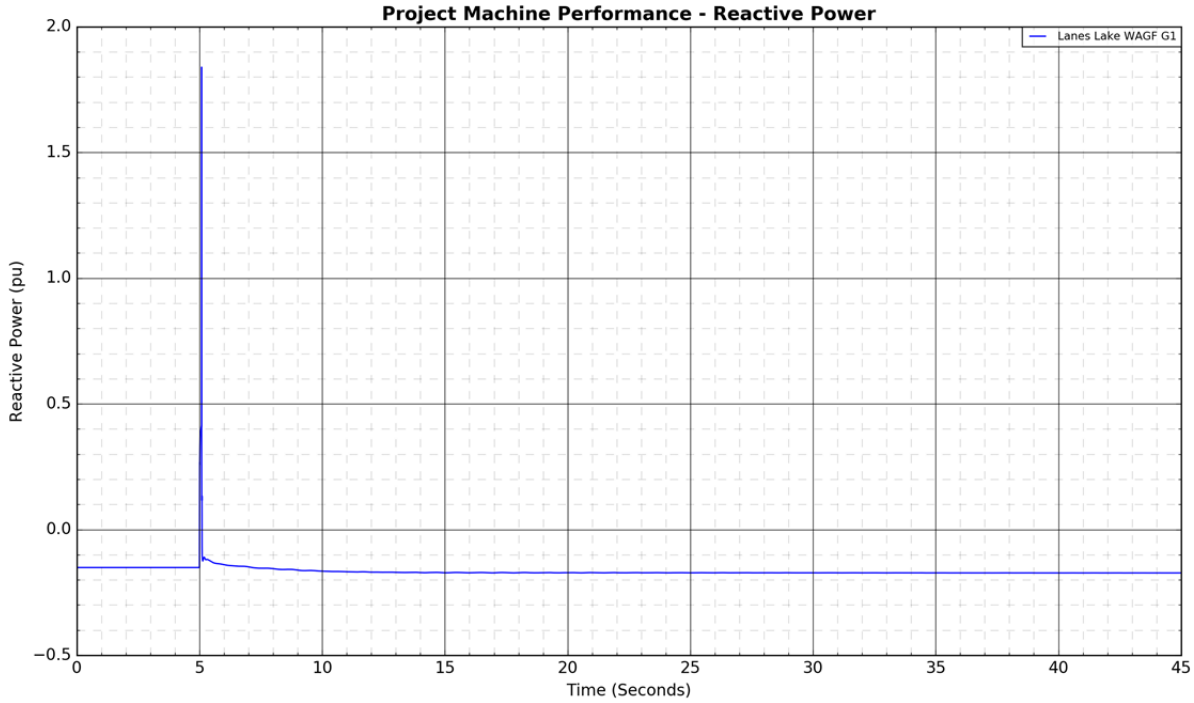
Project Machine Performance - Reactive Power
Lanes Lake WAGF G1
Reactive Power (pu)
Time (Seconds)
2.0
1.5
1.0
0.5
0.0
−0.5
0
5
10
15
20
25
30
35
40
45


Branch Active Power Flows
9L93 (Pioneer 805S - Halkirk 615S)
9L175 (Pioneer 805S - Tincherbray 972S)
9L59 (Anderson 801S - Tinchebray 972S)
Active Power (MW)
Time (Seconds)

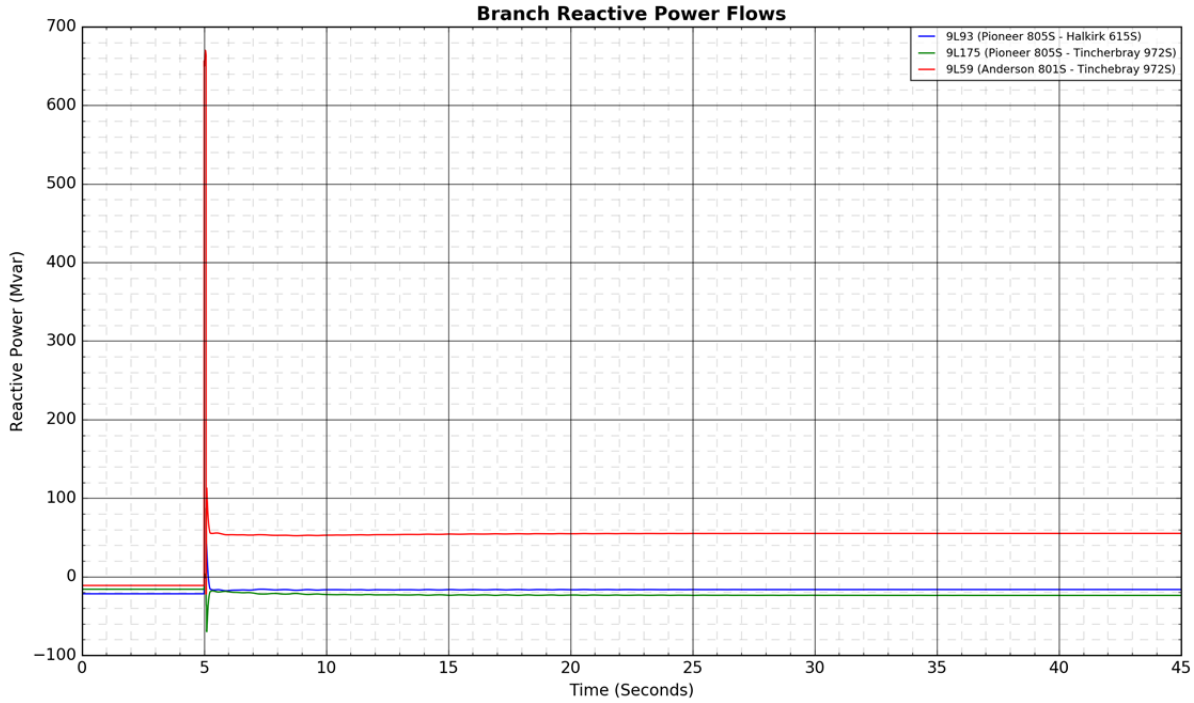
Branch Reactive Power Flows
9L93 (Pioneer 805S - Halkirk 615S)
9L175 (Pioneer 805S - Tincherbray 972S)
9L59 (Anderson 801S - Tinchebray 972S)
Reactive Power (Mvar)
Time (Seconds)

Figure A4-51: 9L59 (Anderson 801S - Tinchebray 972S): 3-phase fault at Anderson 801S

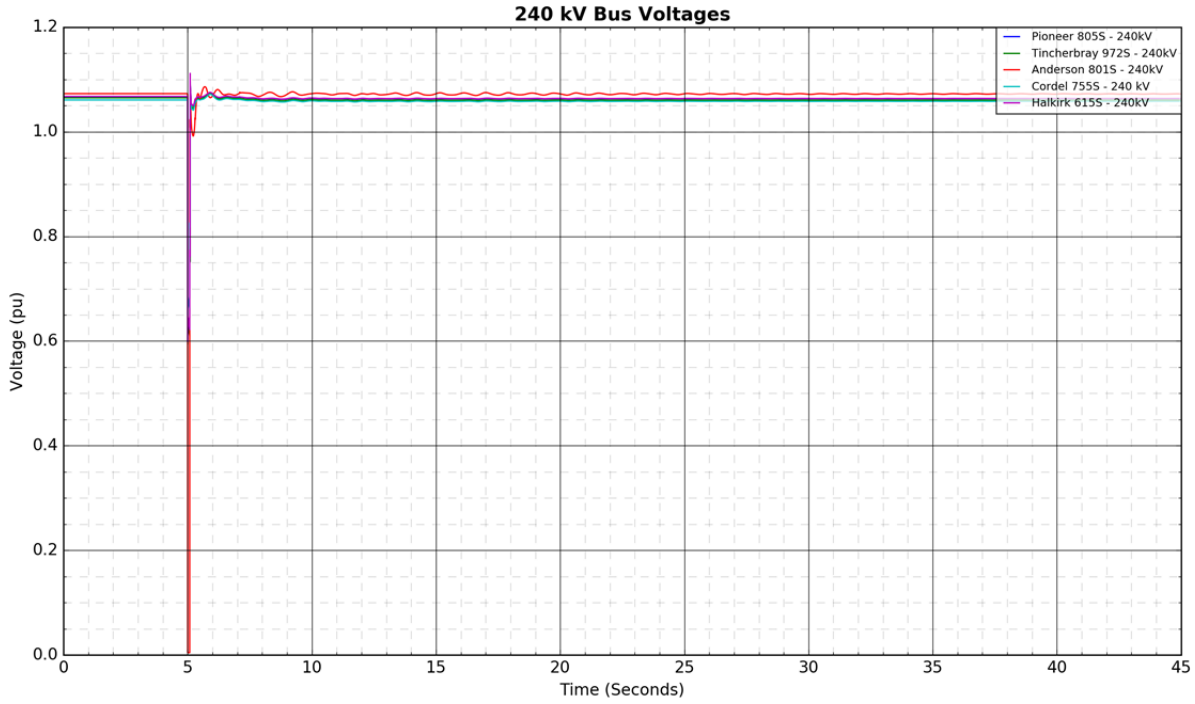

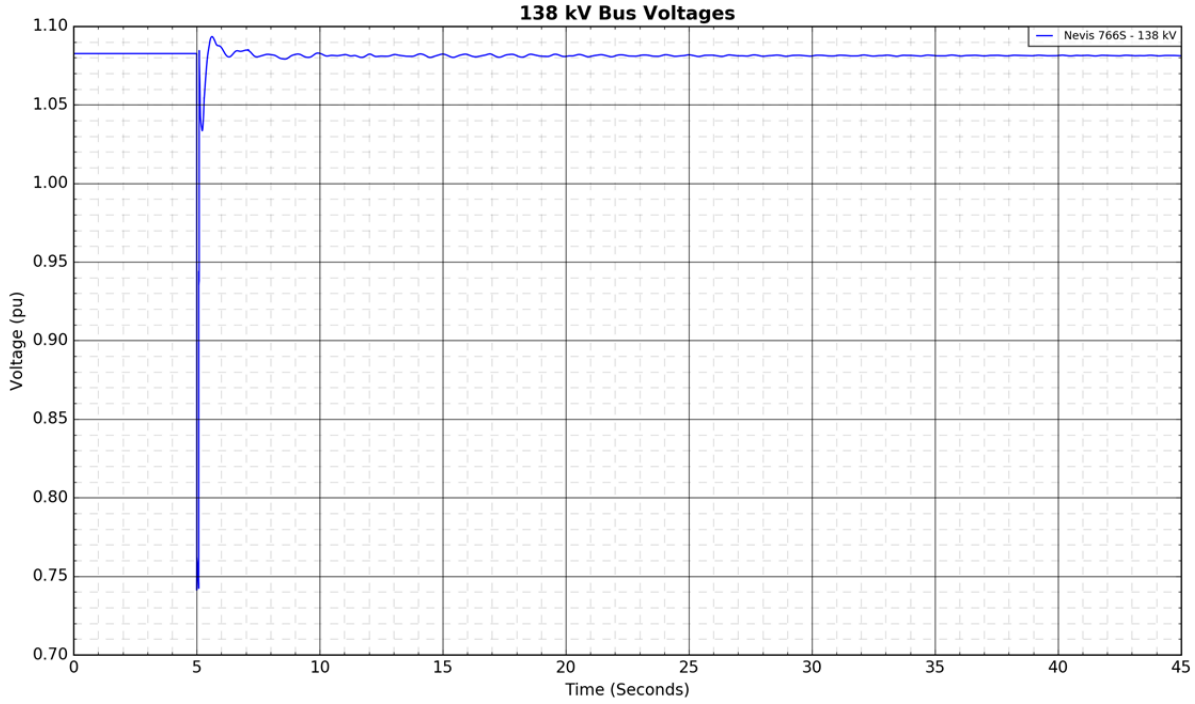

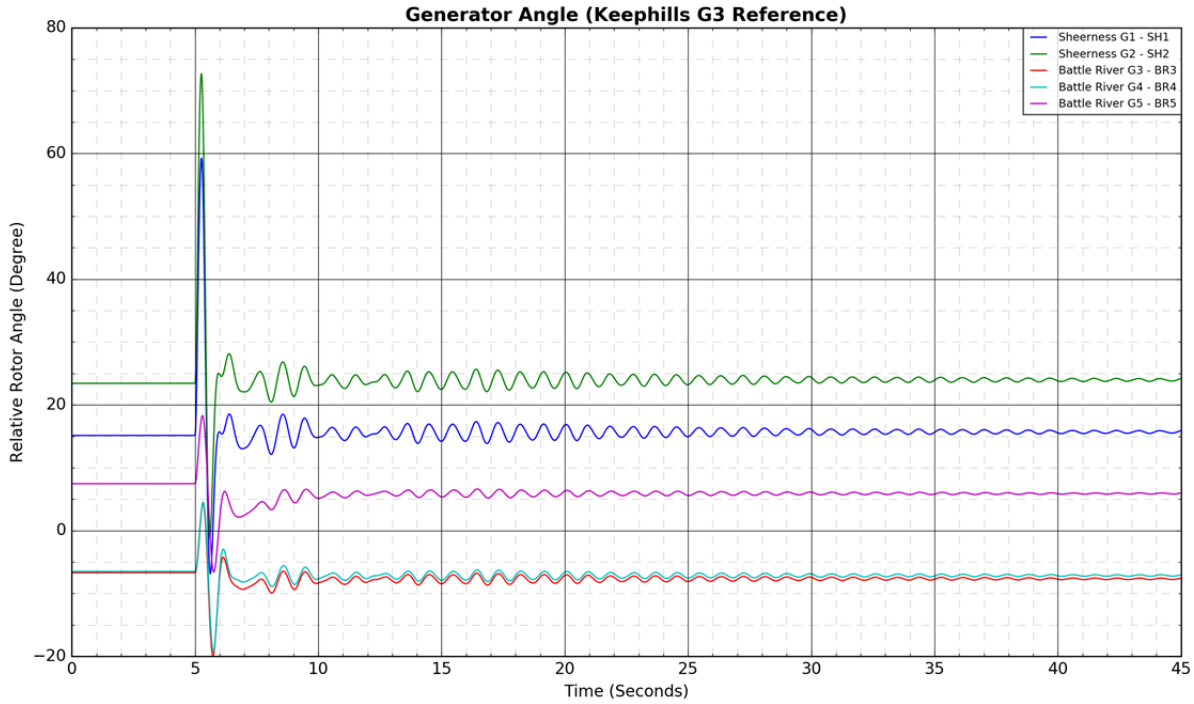
Generator Angle (Keephills G3 Reference)
Relative Rotor Angle (Degree)
Time (Seconds)
Sheerness G1 - SH1
Sheerness G2 - SH2
Battle River G3 - BR3
Battle River G4 - BR4
Battle River G5 - BR5

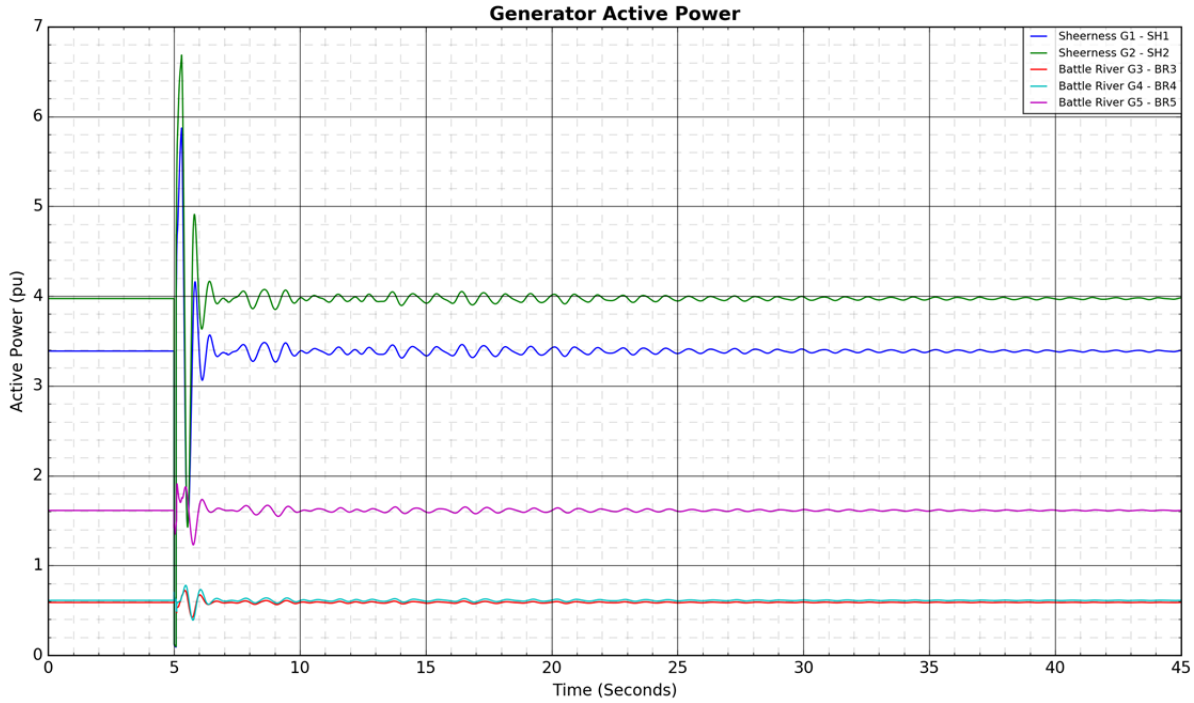
Generator Active Power
Active Power (pu)
Time (Seconds)
Sheerness G1 - SH1
Sheerness G2 - SH2
Battle River G3 - BR3
Battle River G4 - BR4
Battle River G5 - BR5

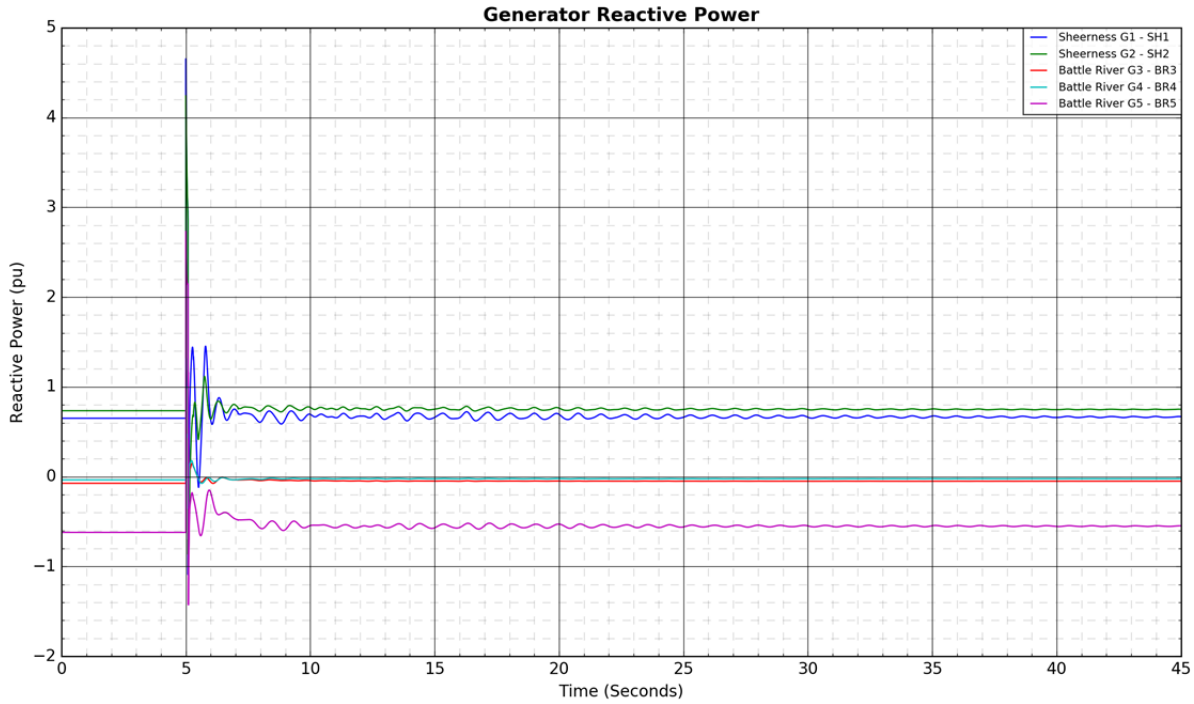
Generator Reactive Power
Sheerness G1 - SH1
Sheerness G2 - SH2
Battle River G3 - BR3
Battle River G4 - BR4
Battle River G5 - BR5
Reactive Power (pu)
Time (Seconds)

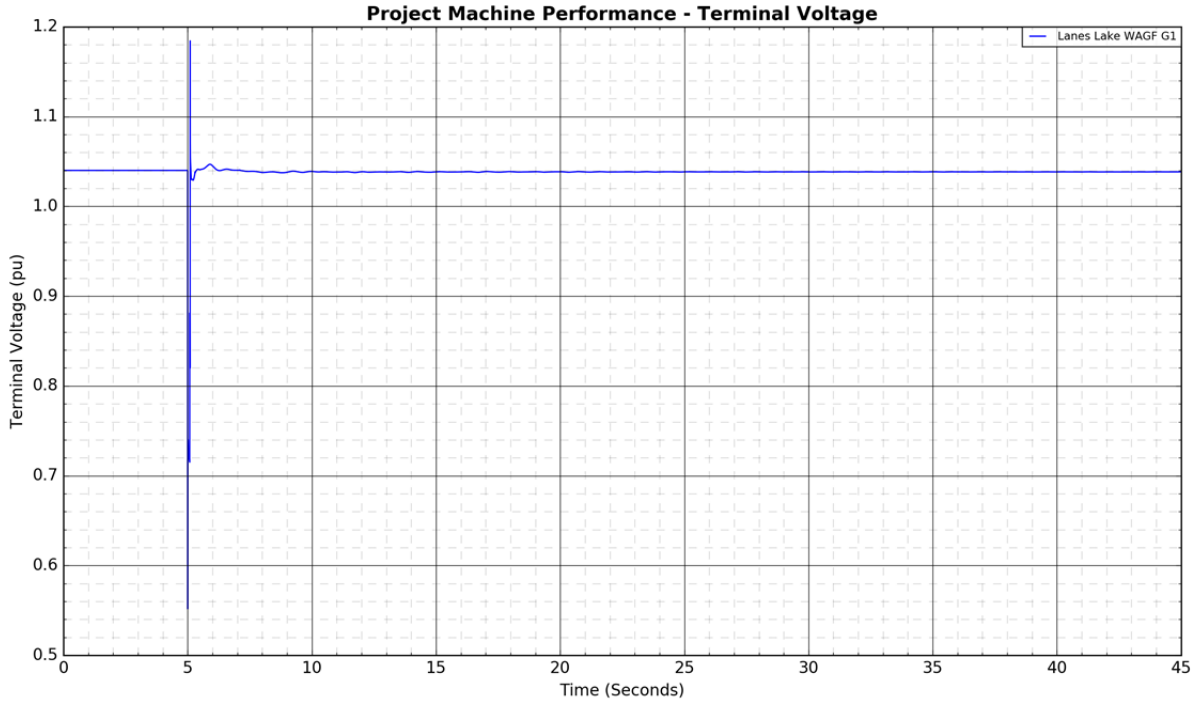
Project Machine Performance - Terminal Voltage
Lanes Lake WAGF G1
Terminal Voltage (pu)
Time (Seconds)


Project Machine Performance - Active Power
Lanes Lake WAGF G1
Active Power (pu)
Time (Seconds)
2.2
2.0
1.8
1.6
1.4
1.2
1.0
0.8
0.6
0
5
10
15
20
25
30
35
40
45

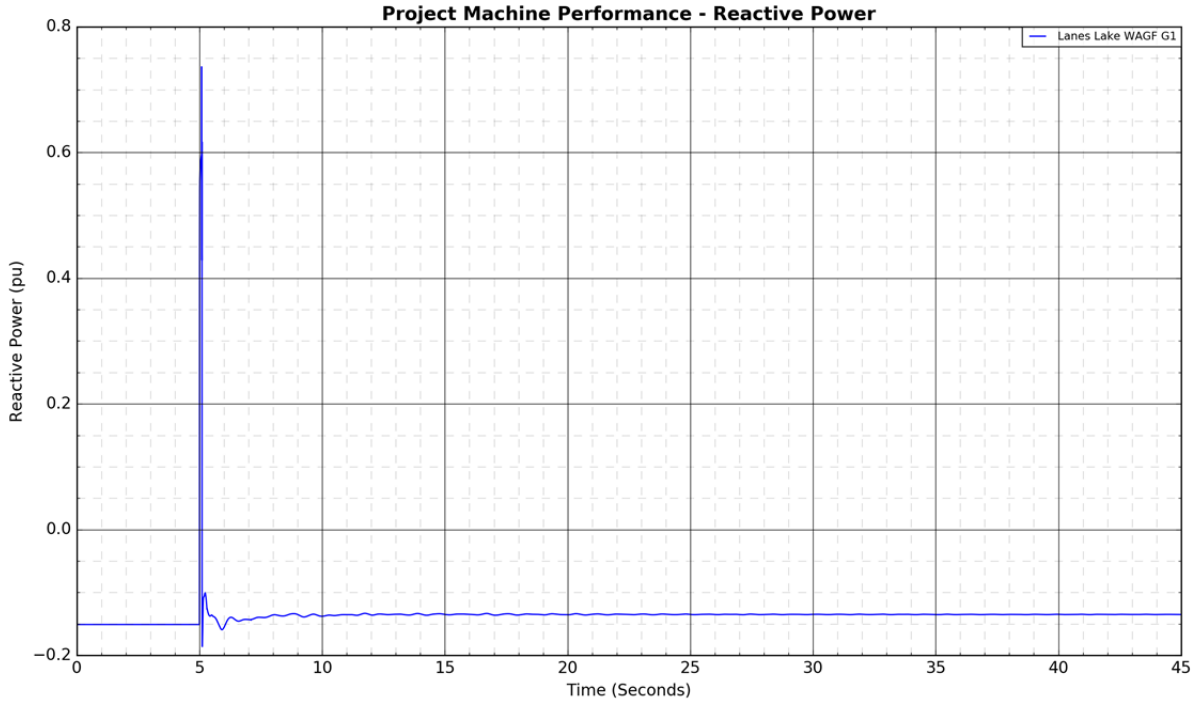
Project Machine Performance - Reactive Power
Lanes Lake WAGF G1
Reactive Power (pu)
Time (Seconds)
0.8
0.6
0.4
0.2
0.0
−0.2
0
5
10
15
20
25
30
35
40
45

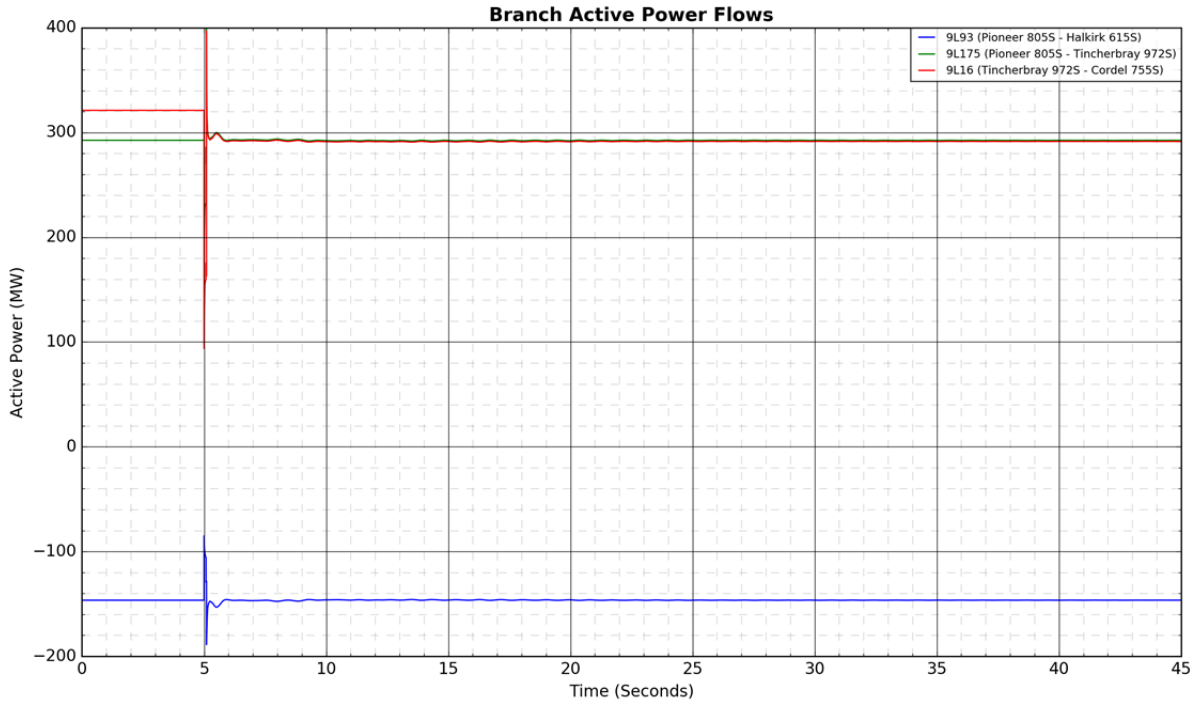
Branch Active Power Flows
9L93 (Pioneer 805S - Halkirk 615S)
9L175 (Pioneer 805S - Tincherbray 972S)
9L16 (Tincherbray 972S - Cordel 755S)
Active Power (MW)
Time (Seconds)

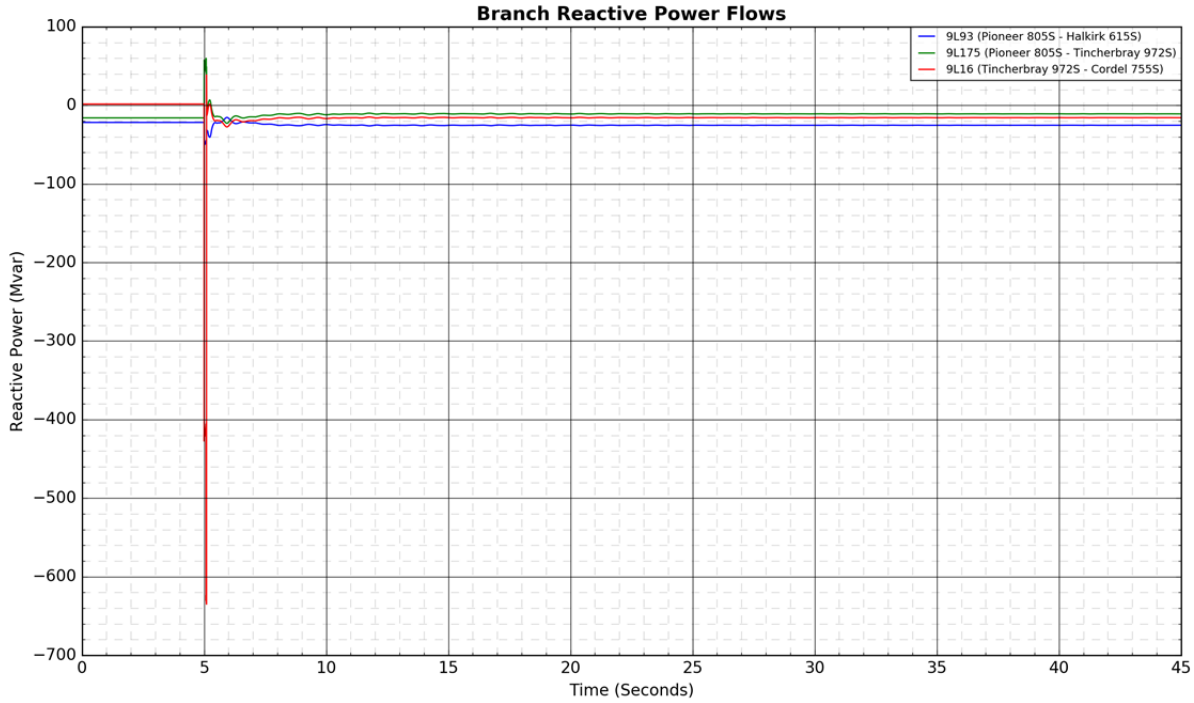
Branch Reactive Power Flows
9L93 (Pioneer 805S - Halkirk 615S)
9L175 (Pioneer 805S - Tincherbray 972S)
9L16 (Tincherbray 972S - Cordel 755S)
Reactive Power (Mvar)
Time (Seconds)

Figure A4-52: 9L59 (Anderson 801S - Tinchebray 972S): 3-phase fault at Tinchebray 972S

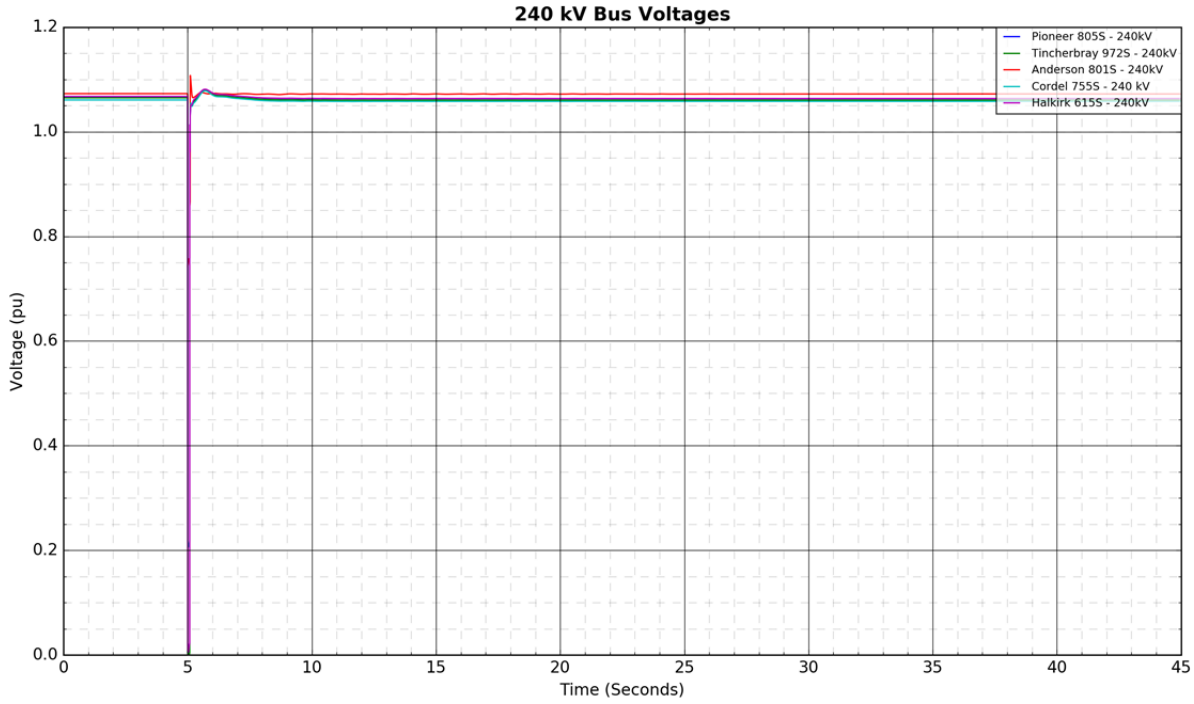

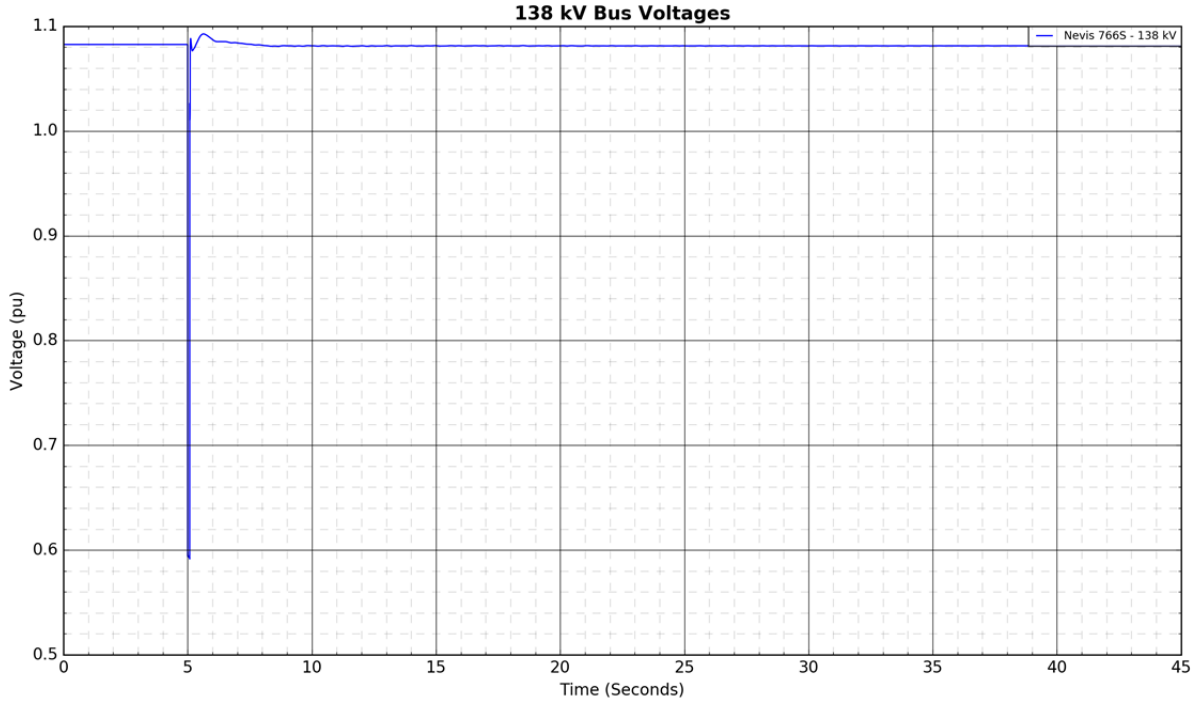

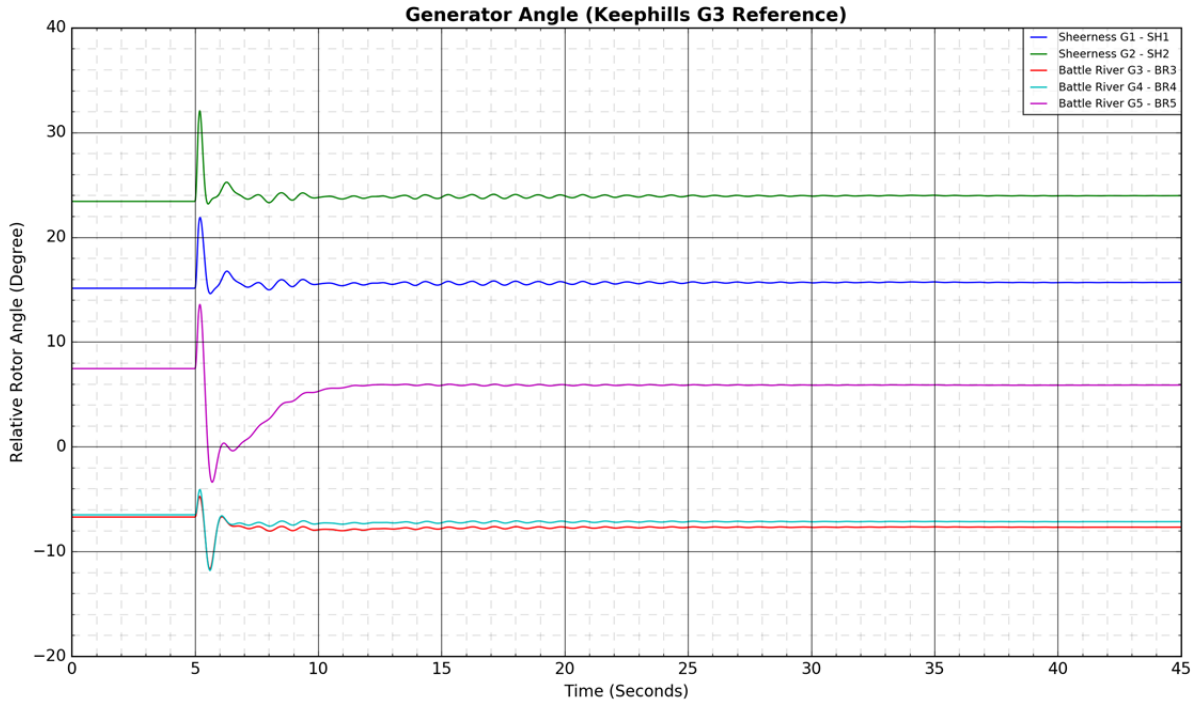
Generator Angle (Keephills G3 Reference)
Relative Rotor Angle (Degree)
Time (Seconds)
Sheerness G1 - SH1
Sheerness G2 - SH2
Battle River G3 - BR3
Battle River G4 - BR4
Battle River G5 - BR5

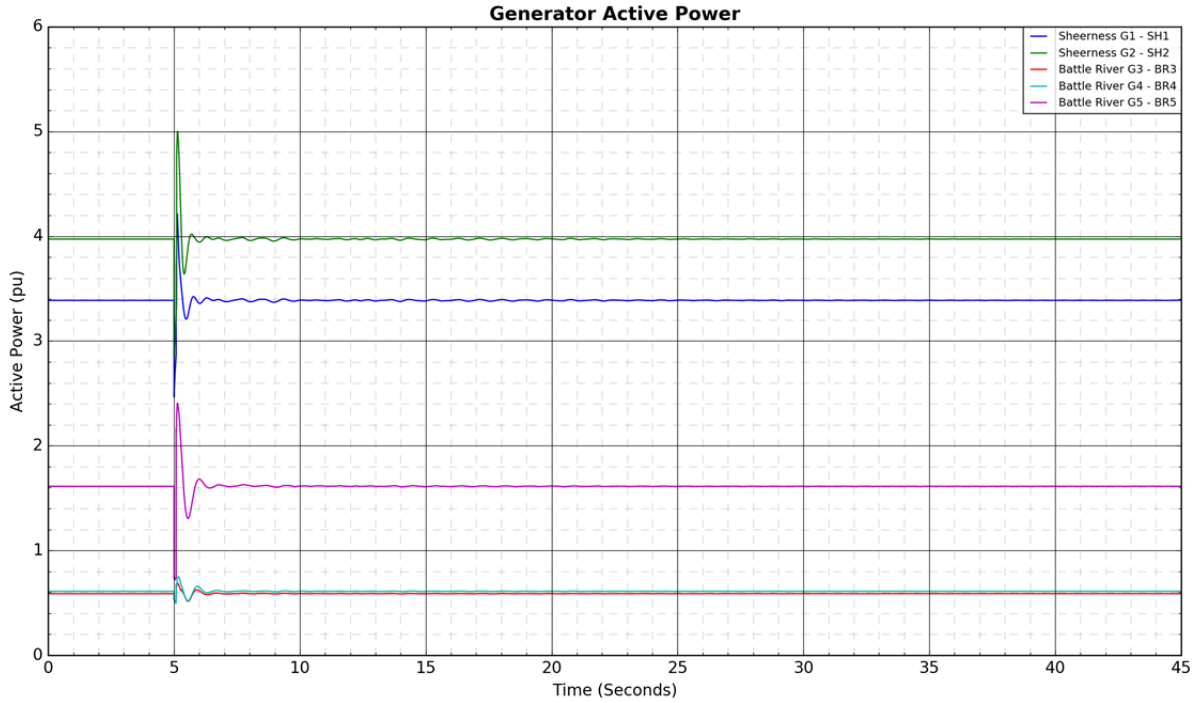
Generator Active Power
Active Power (pu)
Time (Seconds)
Sheerness G1 - SH1
Sheerness G2 - SH2
Battle River G3 - BR3
Battle River G4 - BR4
Battle River G5 - BR5

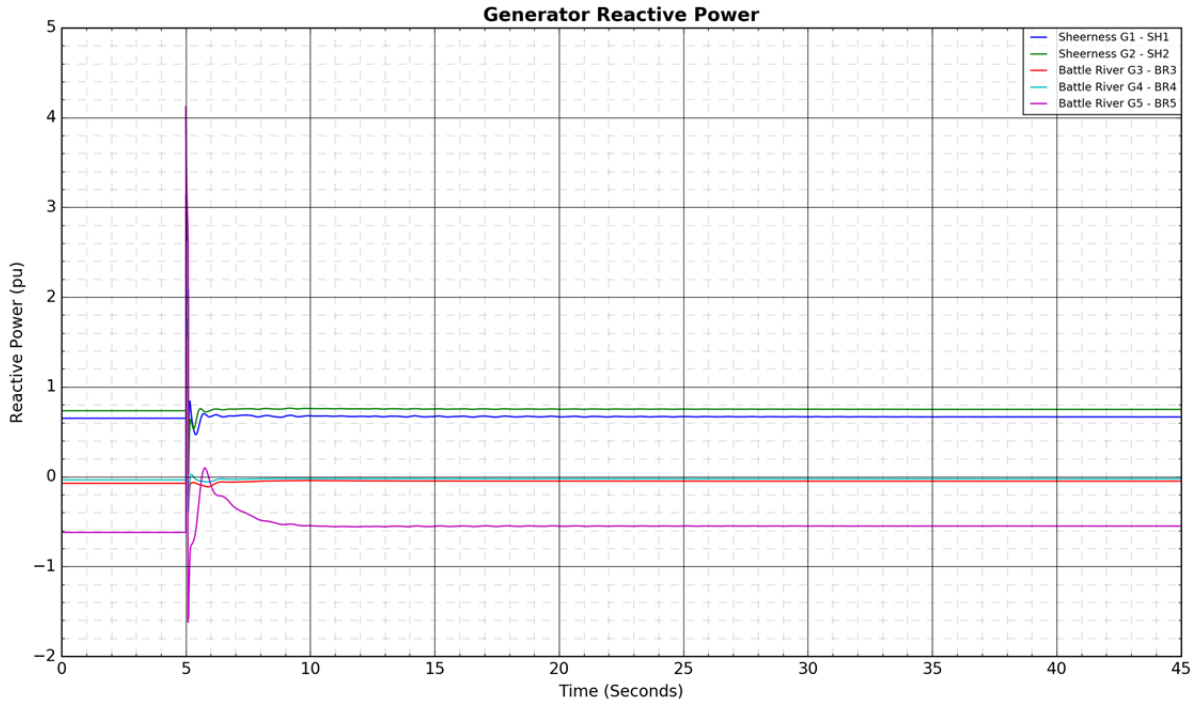
Generator Reactive Power
Sheerness G1 - SH1
Sheerness G2 - SH2
Battle River G3 - BR3
Battle River G4 - BR4
Battle River G5 - BR5
Reactive Power (pu)
Time (Seconds)

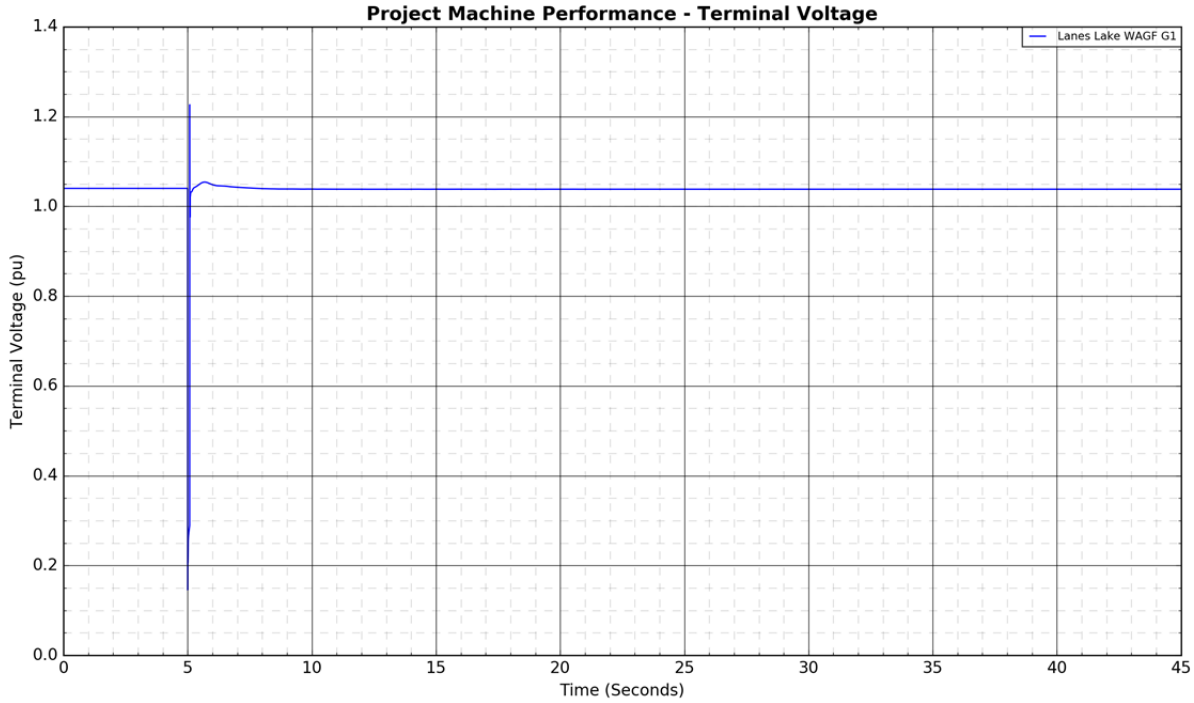
Project Machine Performance - Terminal Voltage
Lanes Lake WAGF G1
Terminal Voltage (pu)
Time (Seconds)


Project Machine Performance - Active Power
Lanes Lake WAGF G1
Active Power (pu)
Time (Seconds)
0.0
0.2
0.4
0.6
0.8
1.0
1.2
1.4
1.6
1.8
0
5
10
15
20
25
30
35
40
45

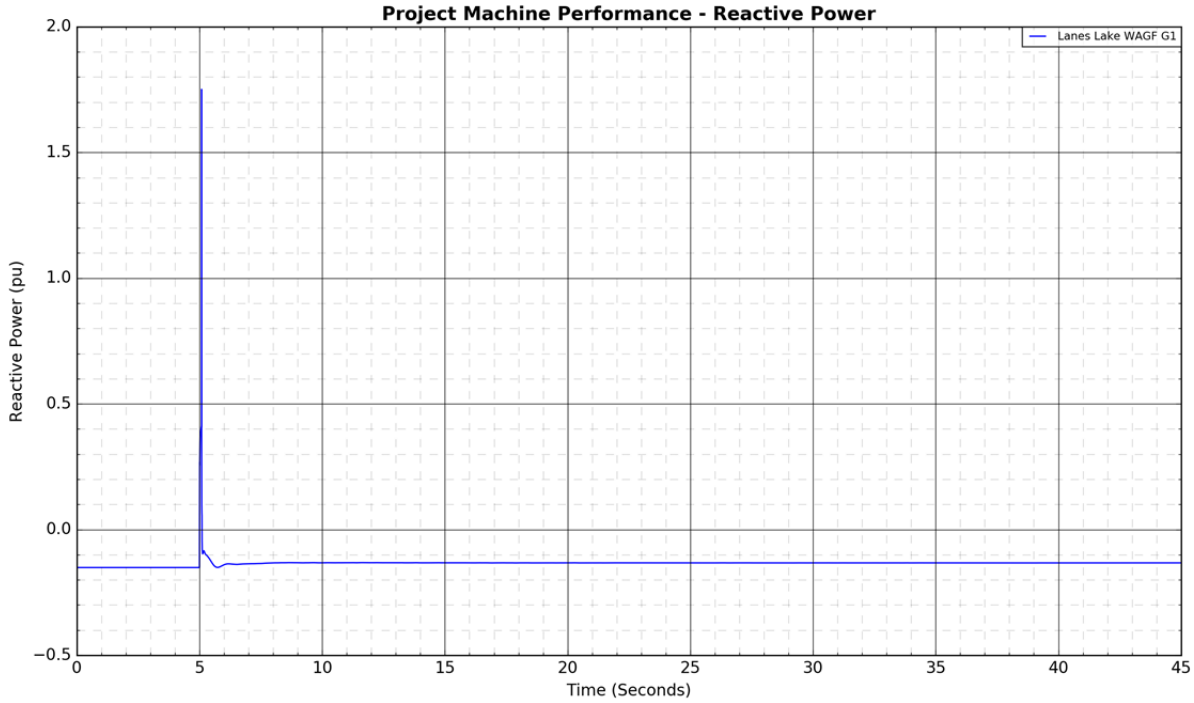
Project Machine Performance - Reactive Power
Lanes Lake WAGF G1
Reactive Power (pu)
Time (Seconds)
−0.5
0.0
0.5
1.0
1.5
2.0
0
5
10
15
20
25
30
35
40
45

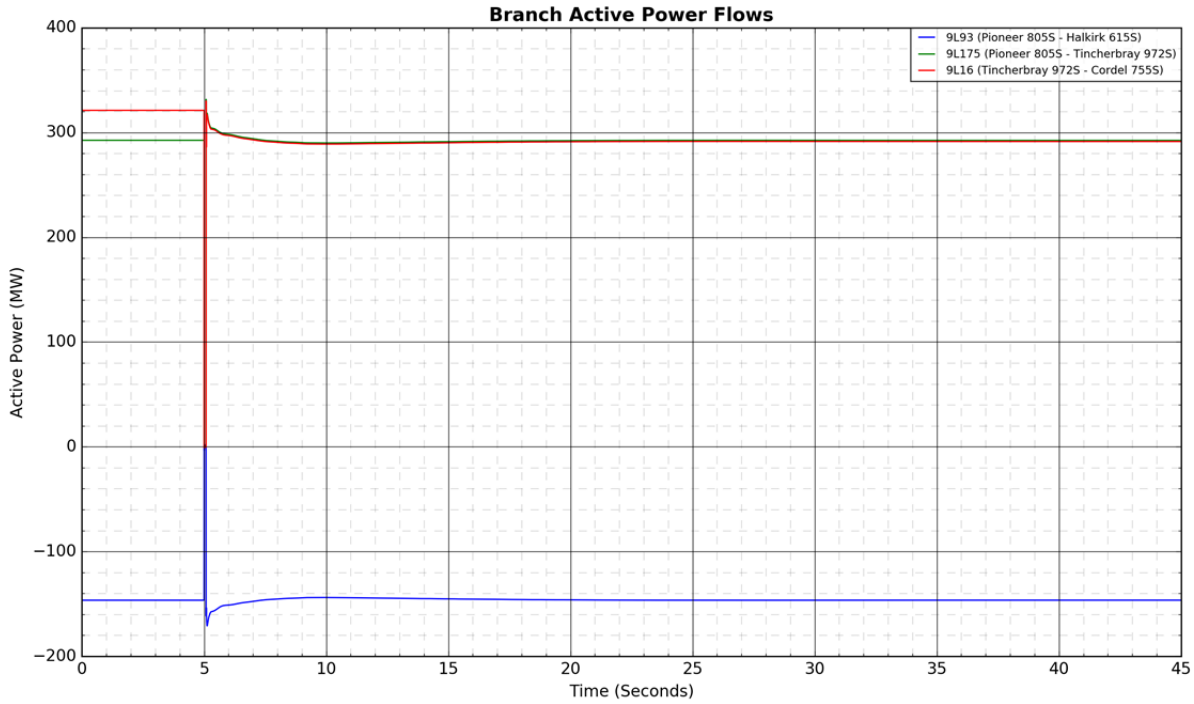
Branch Active Power Flows
9L93 (Pioneer 805S - Halkirk 615S)
9L175 (Pioneer 805S - Tincherbray 972S)
9L16 (Tincherbray 972S - Cordel 755S)
Active Power (MW)
Time (Seconds)

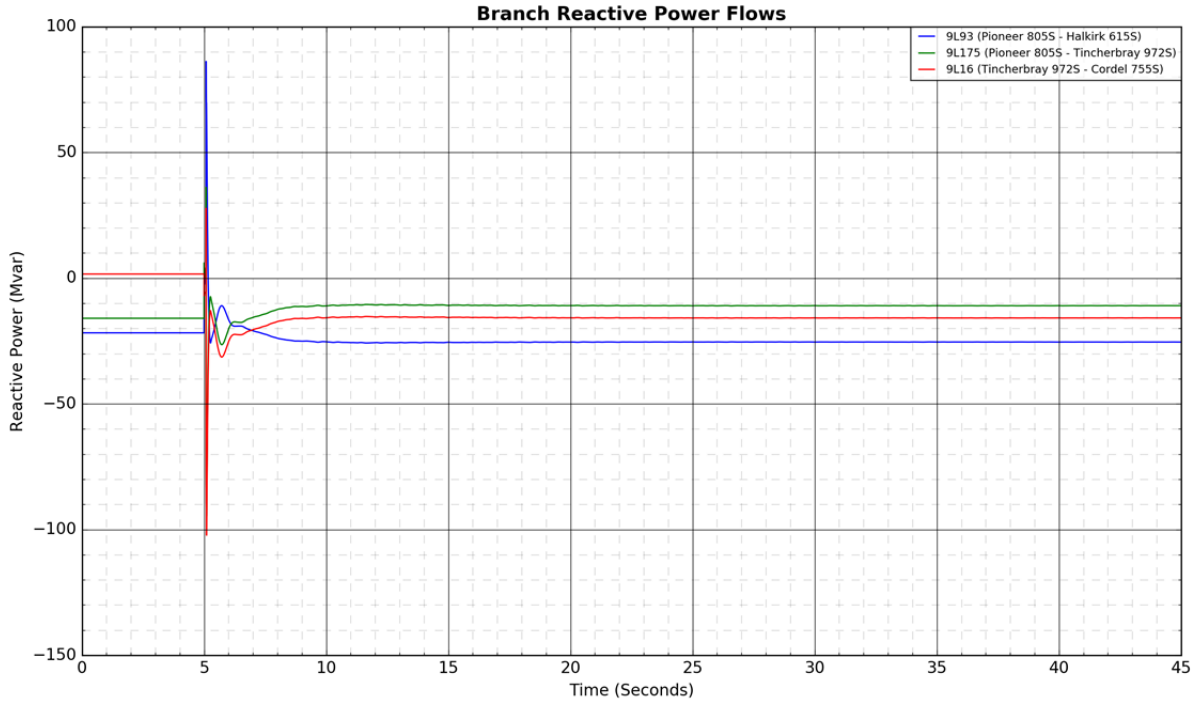
Branch Reactive Power Flows
9L93 (Pioneer 805S - Halkirk 615S)
9L175 (Pioneer 805S - Tincherbray 972S)
9L16 (Tincherbray 972S - Cordel 755S)
Reactive Power (Mvar)
Time (Seconds)

Figure A4-53: 9L966 (Pemukan 932S - Hansman Lake 650S): 3-phase fault at Pemukan 932S

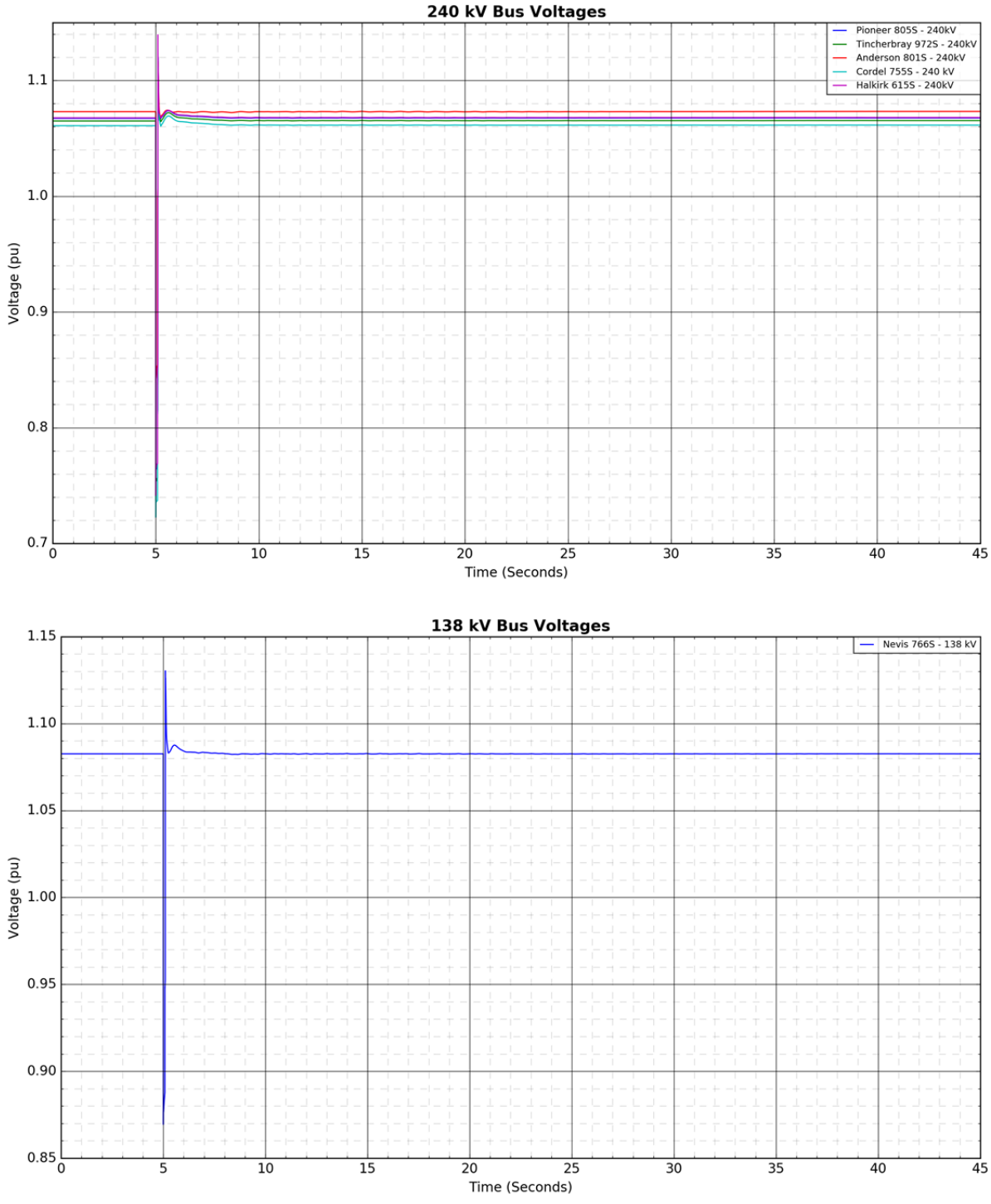

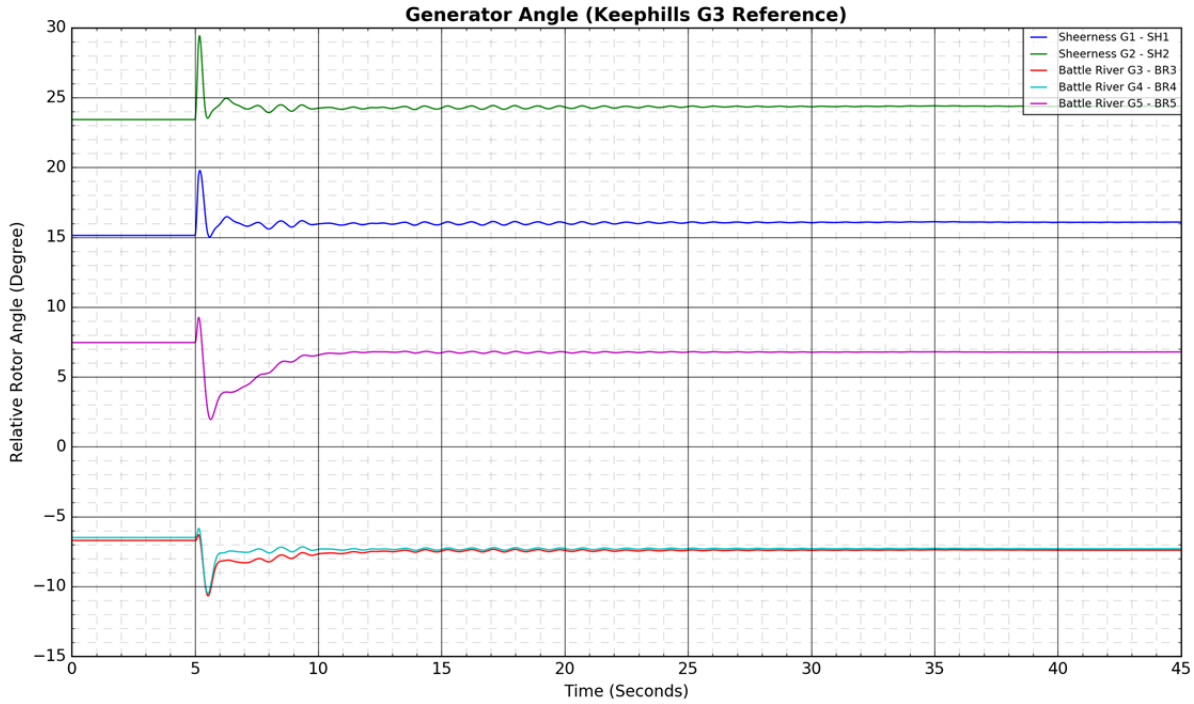
Generator Angle (Keephills G3 Reference)
Relative Rotor Angle (Degree)
Time (Seconds)
Sheerness G1 - SH1
Sheerness G2 - SH2
Battle River G3 - BR3
Battle River G4 - BR4
Battle River G5 - BR5

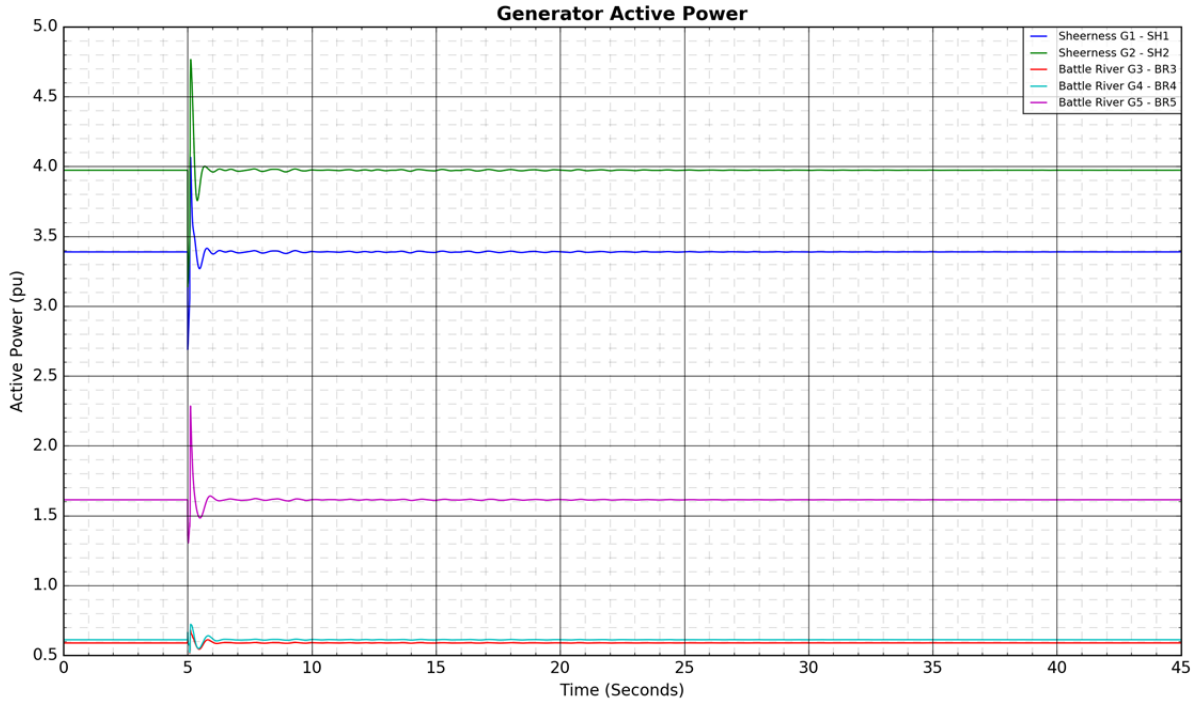
Generator Active Power
Active Power (pu)
Time (Seconds)
Sheerness G1 - SH1
Sheerness G2 - SH2
Battle River G3 - BR3
Battle River G4 - BR4
Battle River G5 - BR5

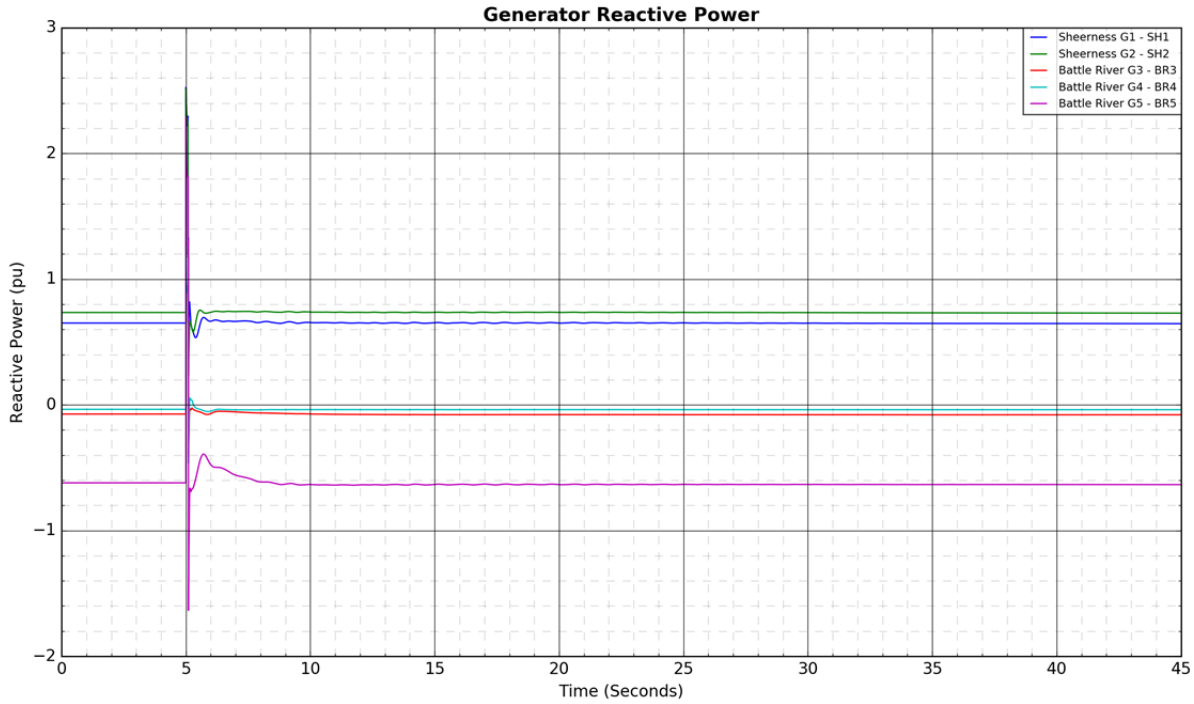
Generator Reactive Power
Sheerness G1 - SH1
Sheerness G2 - SH2
Battle River G3 - BR3
Battle River G4 - BR4
Battle River G5 - BR5
Reactive Power (pu)
Time (Seconds)
3
2
1
0
−1
−2
0
5
10
15
20
25
30
35
40
45

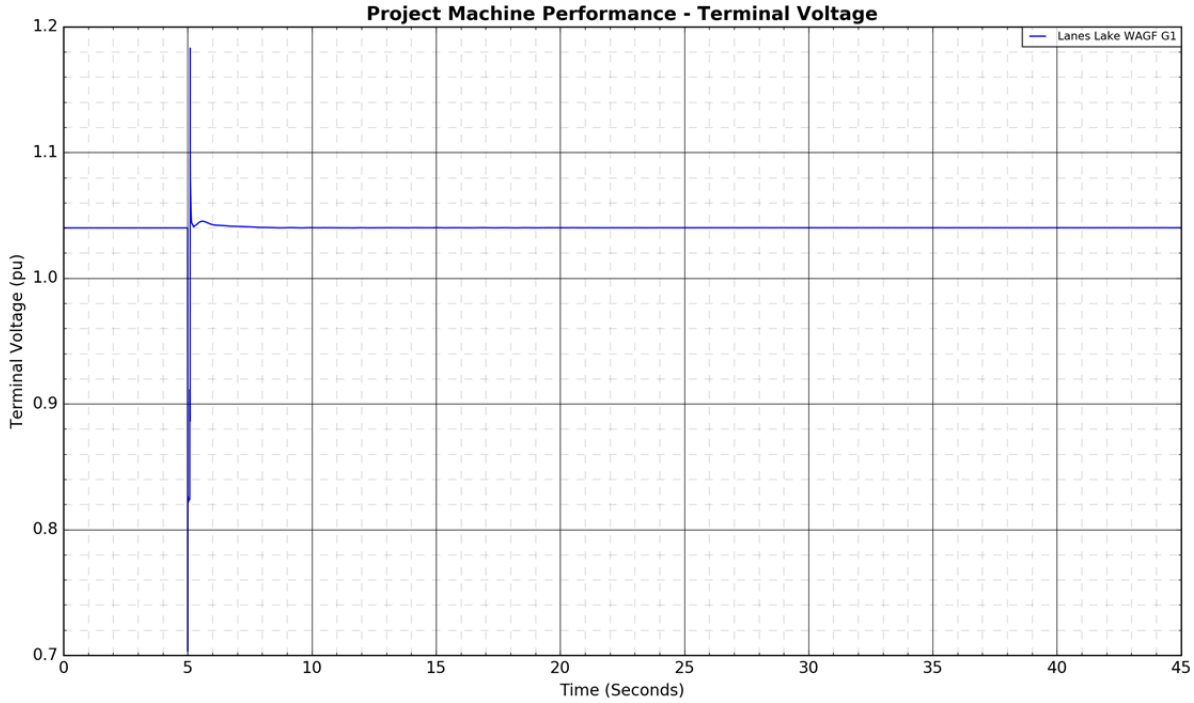
Project Machine Performance - Terminal Voltage
Lanes Lake WAGF G1
Terminal Voltage (pu)
Time (Seconds)
1.2
1.1
1.0
0.9
0.8
0.7
0
5
10
15
20
25
30
35
40
45


Project Machine Performance - Active Power
Lanes Lake WAGF G1
Active Power (pu)
Time (Seconds)
2.2
2.0
1.8
1.6
1.4
1.2
1.0
0
5
10
15
20
25
30
35
40
45


Project Machine Performance - Reactive Power
Lanes Lake WAGF G1
Reactive Power (pu)
Time (Seconds)
0.5
0.4
0.3
0.2
0.1
0.0
−0.1
−0.2
−0.3
0
5
10
15
20
25
30
35
40
45

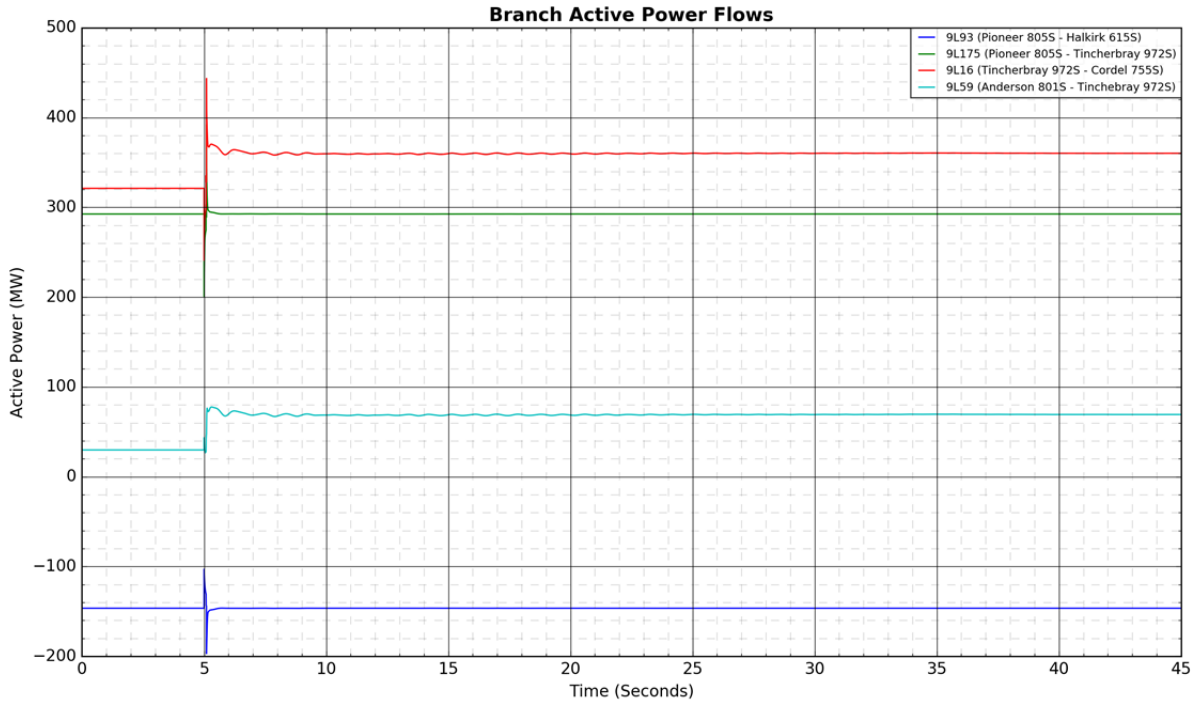
Branch Active Power Flows
9L93 (Pioneer 805S - Halkirk 615S)
9L175 (Pioneer 805S - Tincherbray 972S)
9L16 (Tincherbray 972S - Cordel 755S)
9L59 (Anderson 801S - Tinchebray 972S)
Active Power (MW)
Time (Seconds)

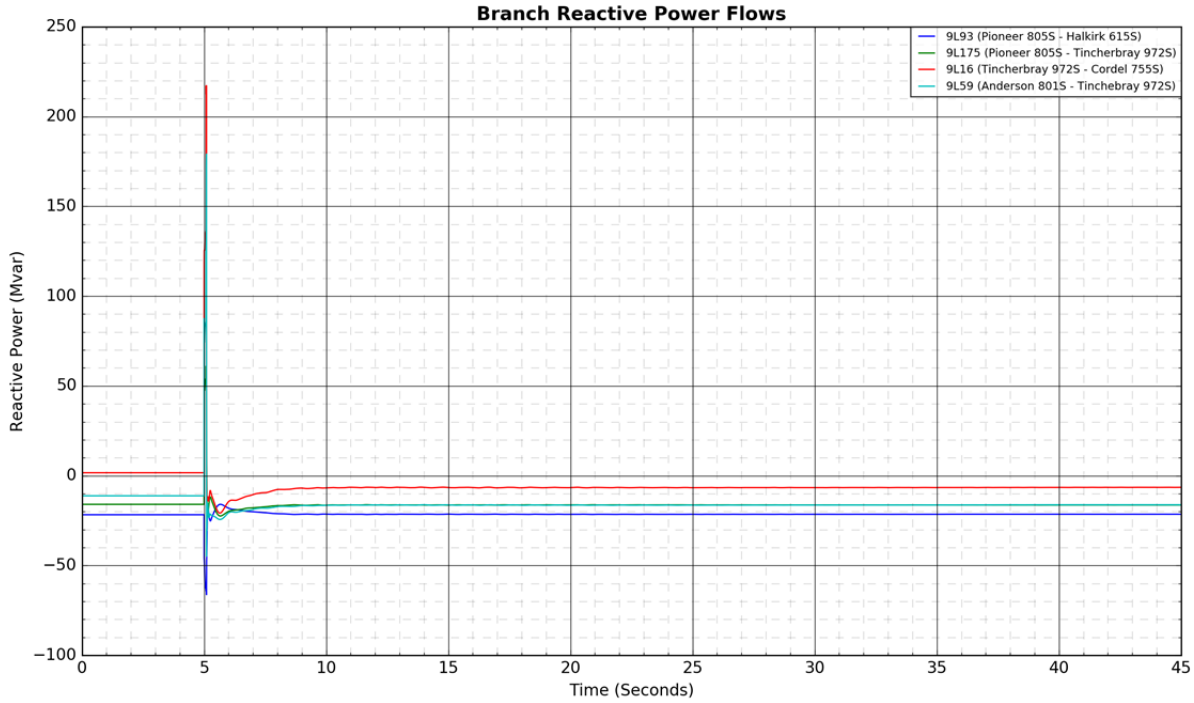
Branch Reactive Power Flows
9L93 (Pioneer 805S - Halkirk 615S)
9L175 (Pioneer 805S - Tincherbray 972S)
9L16 (Tincherbray 972S - Cordel 755S)
9L59 (Anderson 801S - Tinchebray 972S)
Reactive Power (Mvar)
Time (Seconds)

Figure A4-54: 9L966 (Pemukan 932S - Hansman Lake 650S): 3-phase fault at Hansman Lake 650S

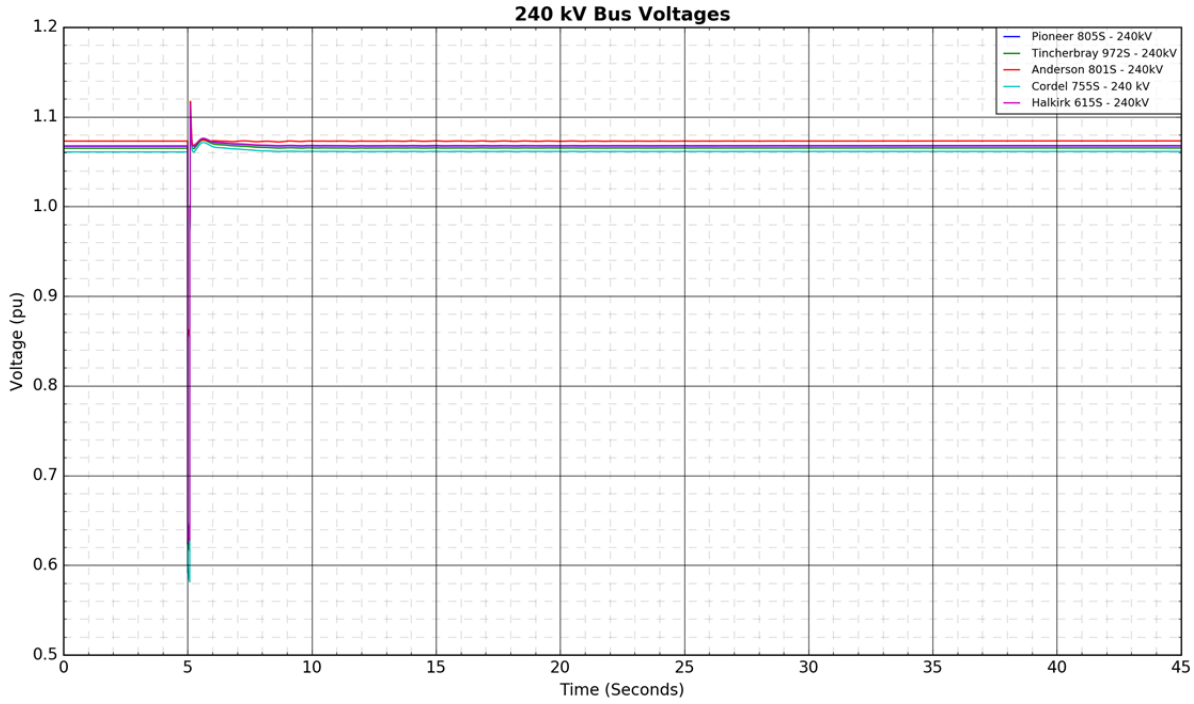

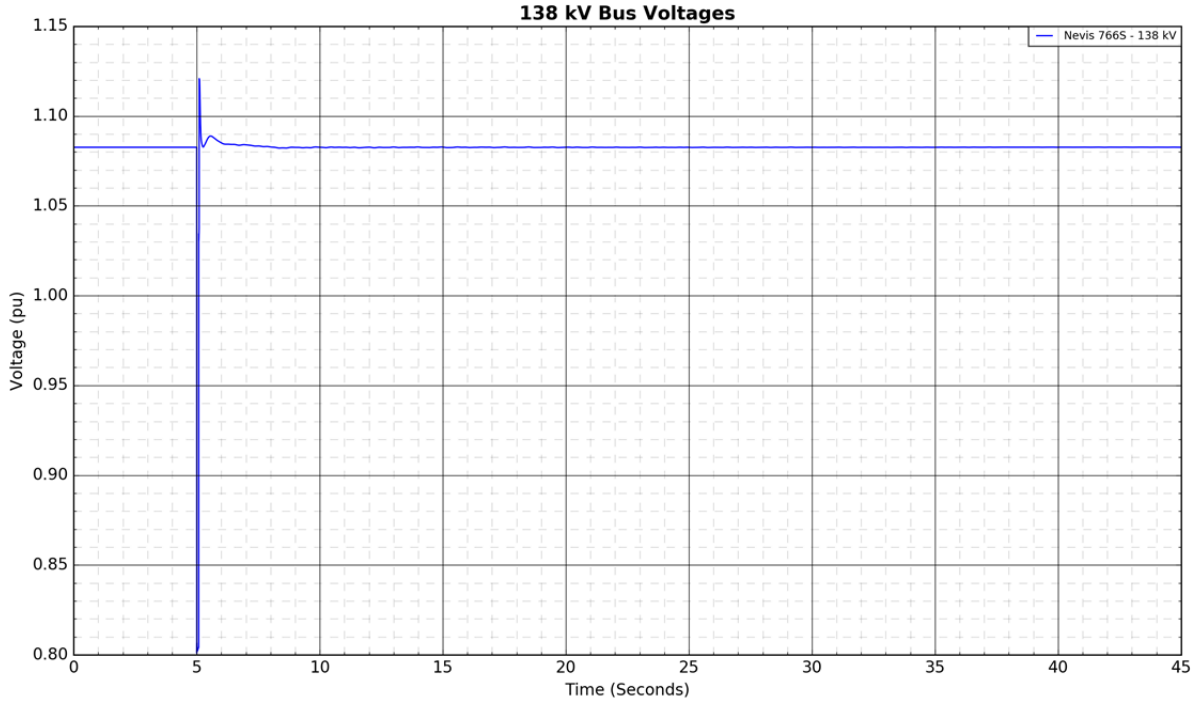

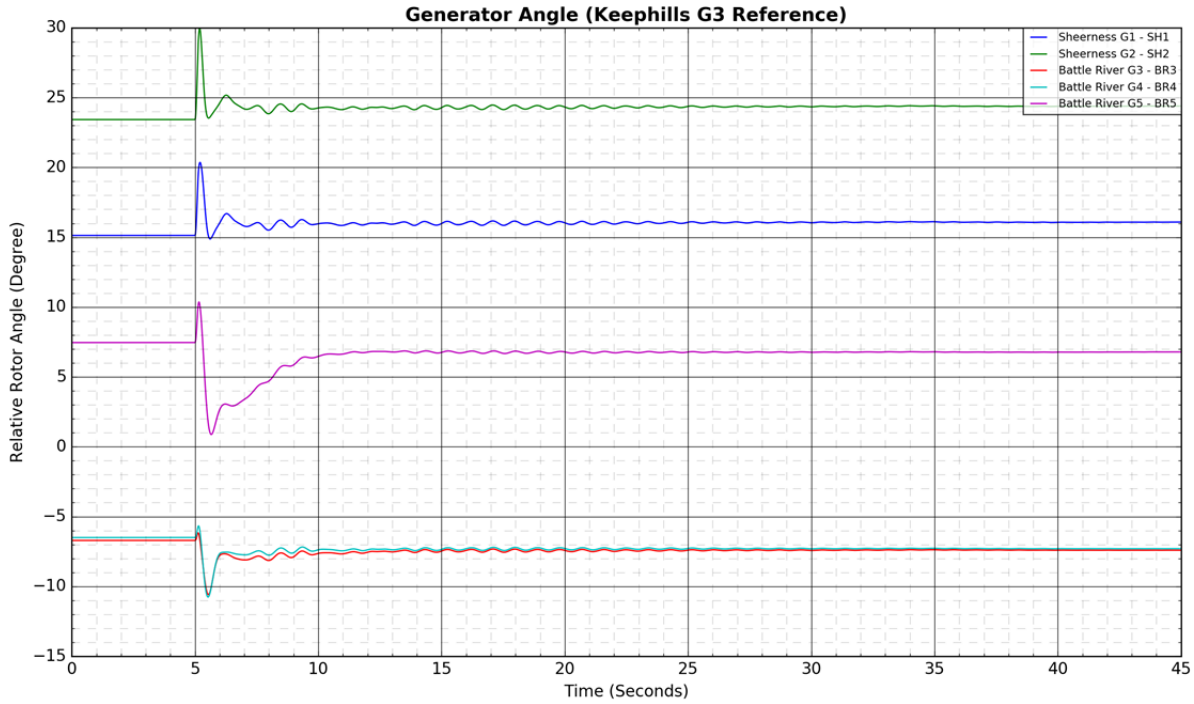
Generator Angle (Keephills G3 Reference)
Relative Rotor Angle (Degree)
Time (Seconds)
Sheerness G1 - SH1
Sheerness G2 - SH2
Battle River G3 - BR3
Battle River G4 - BR4
Battle River G5 - BR5

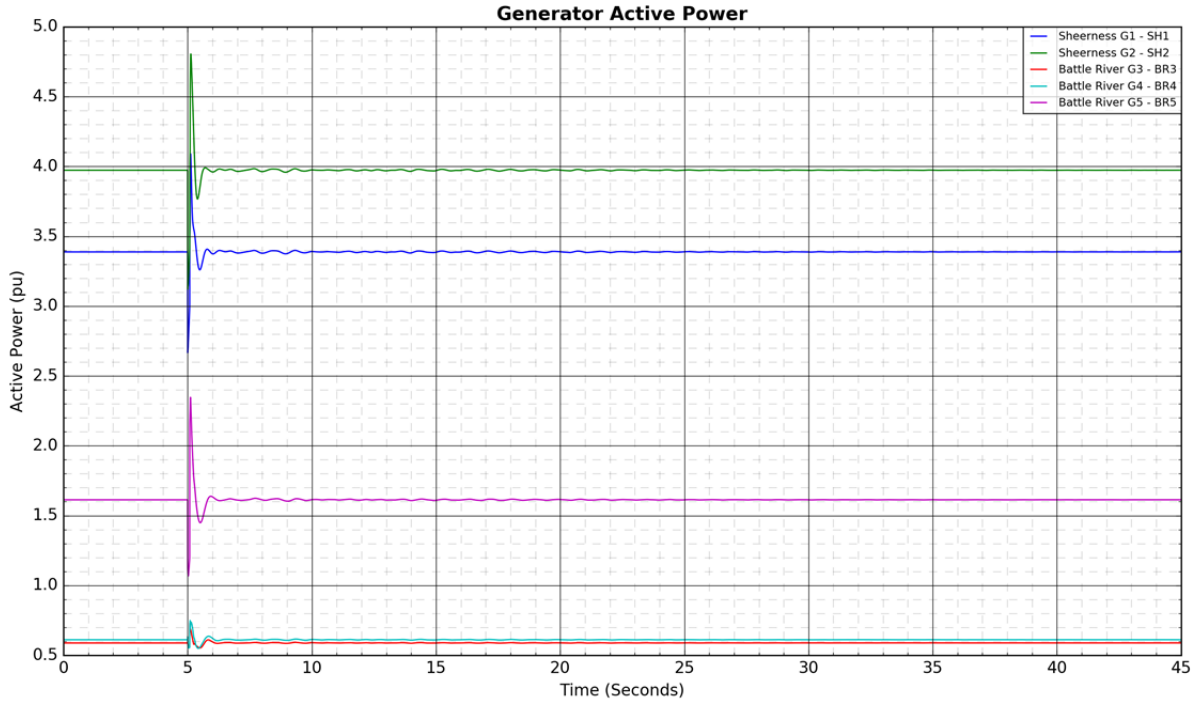
Generator Active Power
Active Power (pu)
Time (Seconds)
Sheerness G1 - SH1
Sheerness G2 - SH2
Battle River G3 - BR3
Battle River G4 - BR4
Battle River G5 - BR5

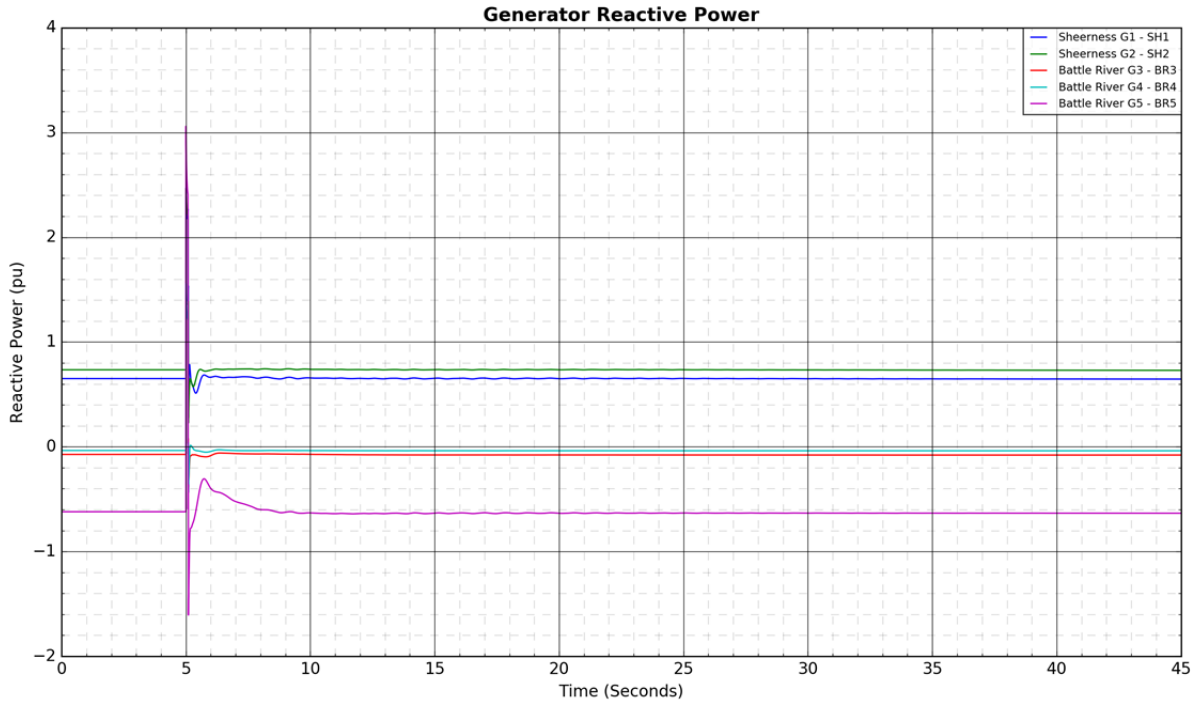
Generator Reactive Power
Sheerness G1 - SH1
Sheerness G2 - SH2
Battle River G3 - BR3
Battle River G4 - BR4
Battle River G5 - BR5
Reactive Power (pu)
Time (Seconds)

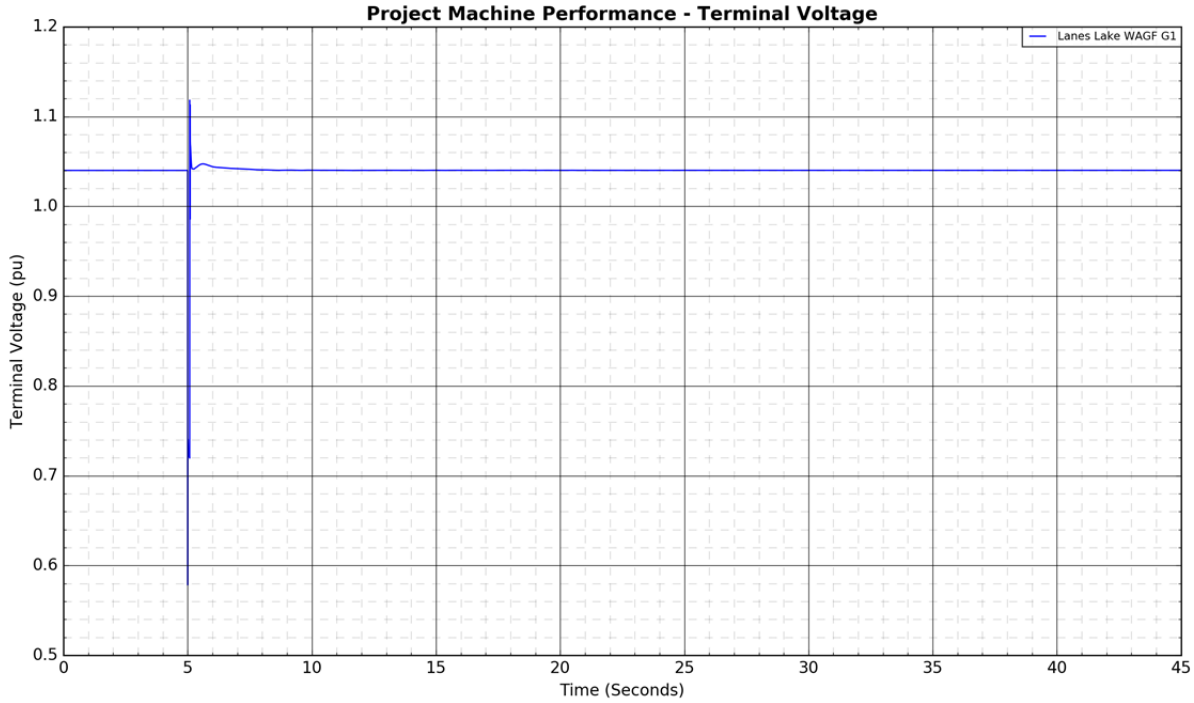
Project Machine Performance - Terminal Voltage
Lanes Lake WAGF G1
Terminal Voltage (pu)
Time (Seconds)


Project Machine Performance - Active Power
Lanes Lake WAGF G1
Active Power (pu)
Time (Seconds)
2.2
2.0
1.8
1.6
1.4
1.2
1.0
0.8
0
5
10
15
20
25
30
35
40
45

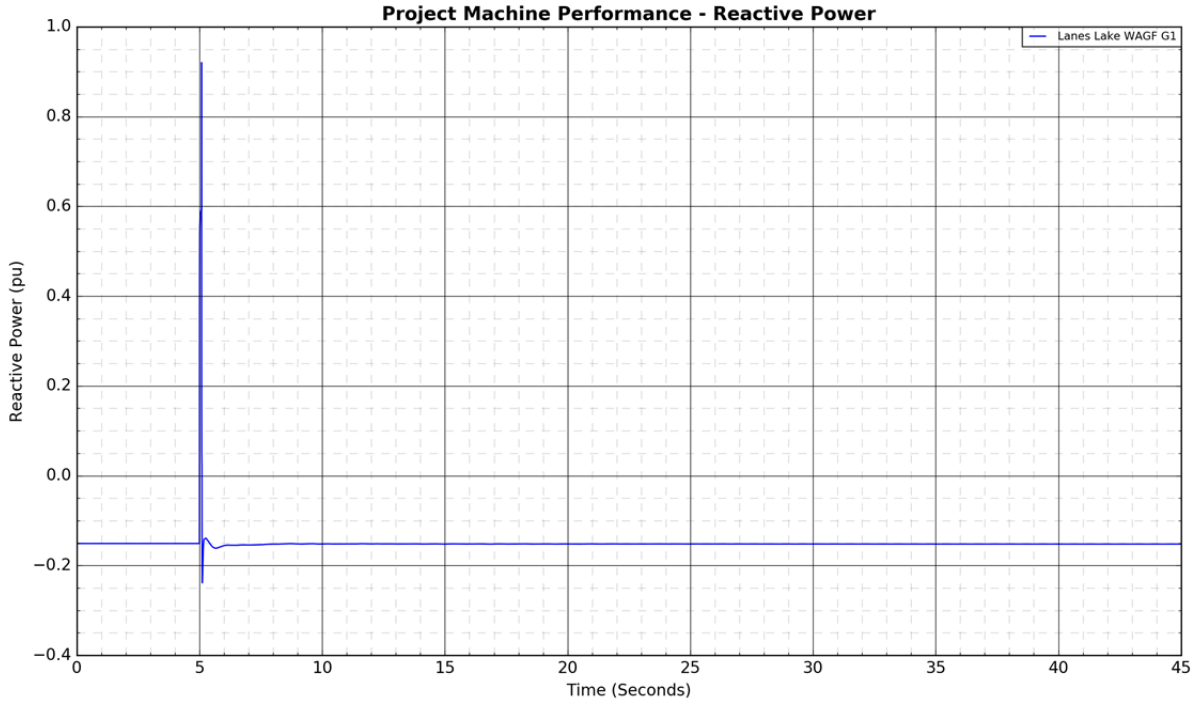
Project Machine Performance - Reactive Power
Lanes Lake WAGF G1
Reactive Power (pu)
Time (Seconds)
1.0
0.8
0.6
0.4
0.2
0.0
−0.2
−0.4
0
5
10
15
20
25
30
35
40
45

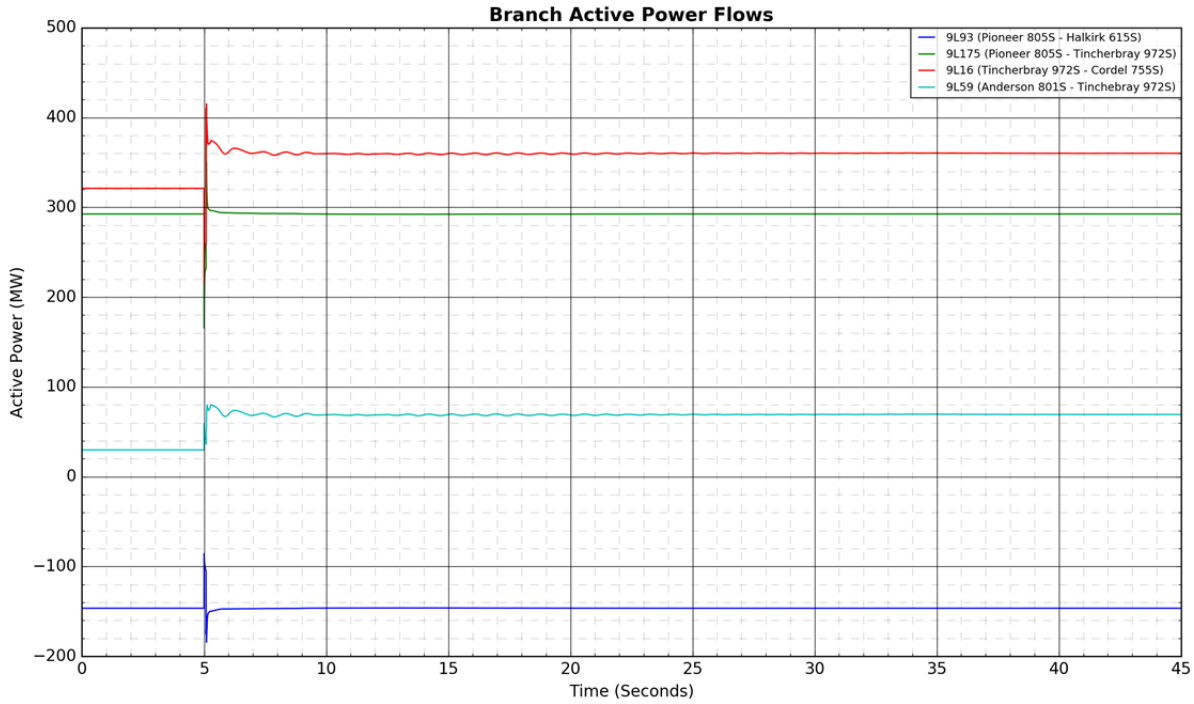
Branch Active Power Flows
9L93 (Pioneer 805S - Halkirk 615S)
9L175 (Pioneer 805S - Tincherbray 972S)
9L16 (Tincherbray 972S - Cordel 755S)
9L59 (Anderson 801S - Tinchebray 972S)
Active Power (MW)
Time (Seconds)

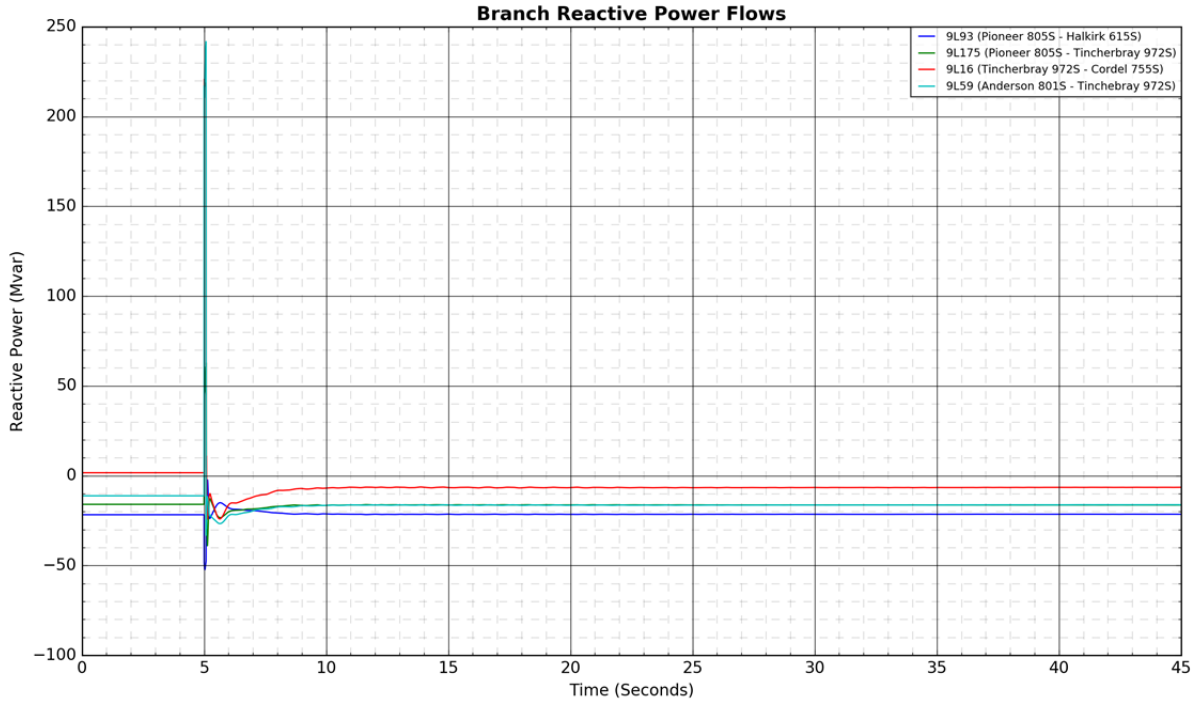
Branch Reactive Power Flows
9L93 (Pioneer 805S - Halkirk 615S)
9L175 (Pioneer 805S - Tincherbray 972S)
9L16 (Tincherbray 972S - Cordel 755S)
9L59 (Anderson 801S - Tinchebray 972S)
Reactive Power (Mvar)
Time (Seconds)

Figure A4-55: 912L\9L912 (Nevis 766S - Red Deer 63S): 3-phase fault at Nevis 766S

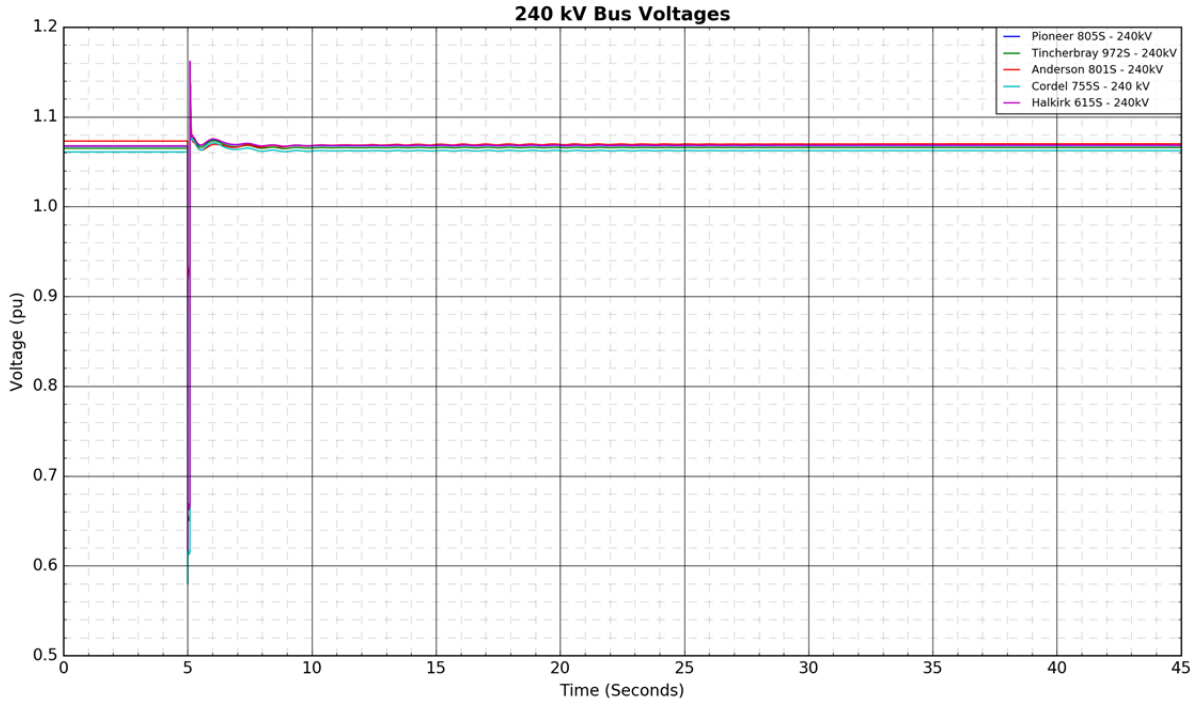

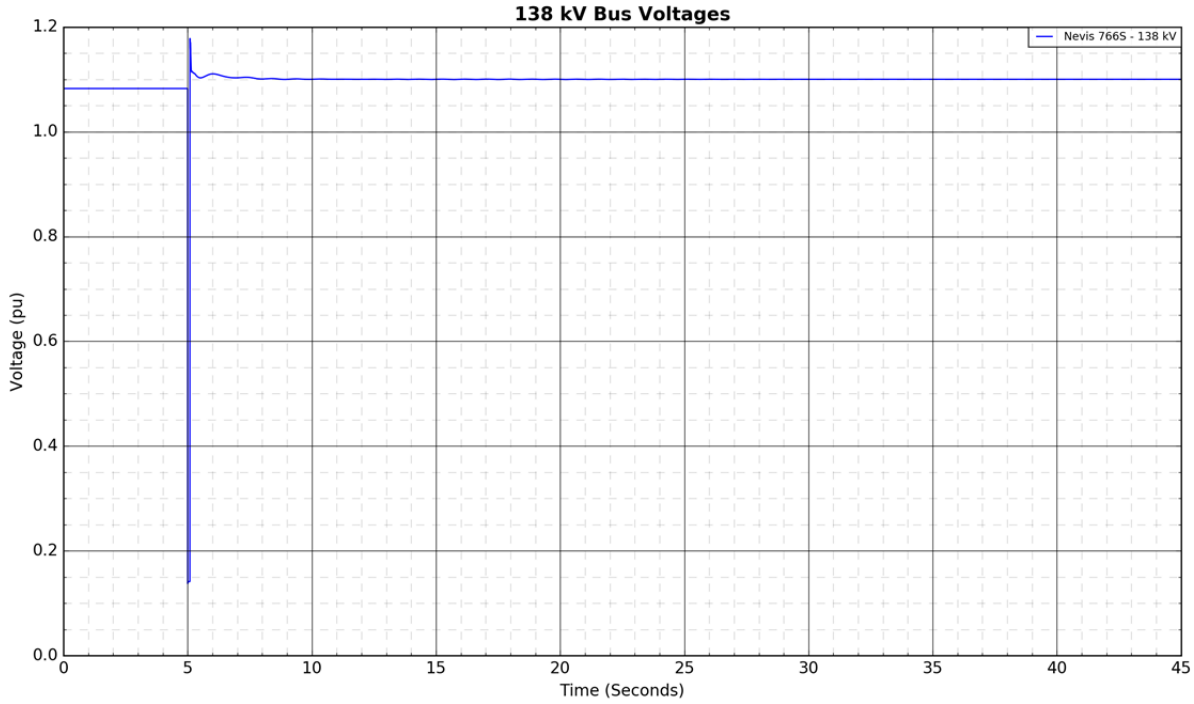

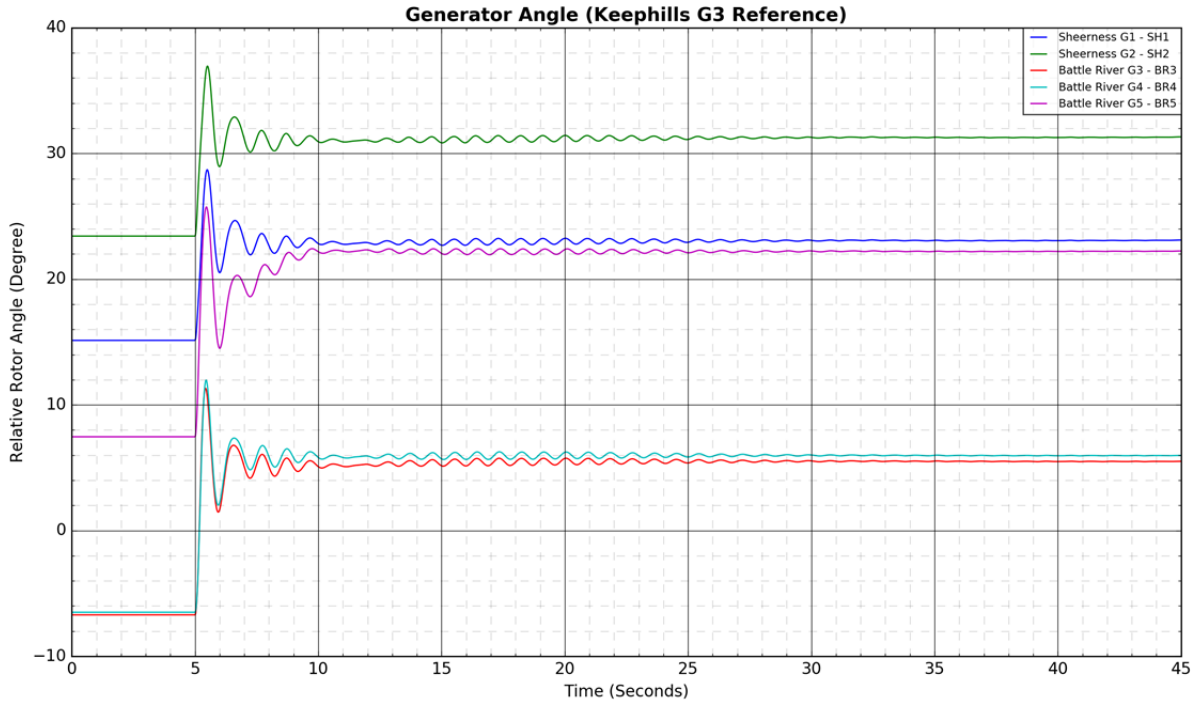
Generator Angle (Keephills G3 Reference)
Relative Rotor Angle (Degree)
Time (Seconds)
Sheerness G1 - SH1
Sheerness G2 - SH2
Battle River G3 - BR3
Battle River G4 - BR4
Battle River G5 - BR5

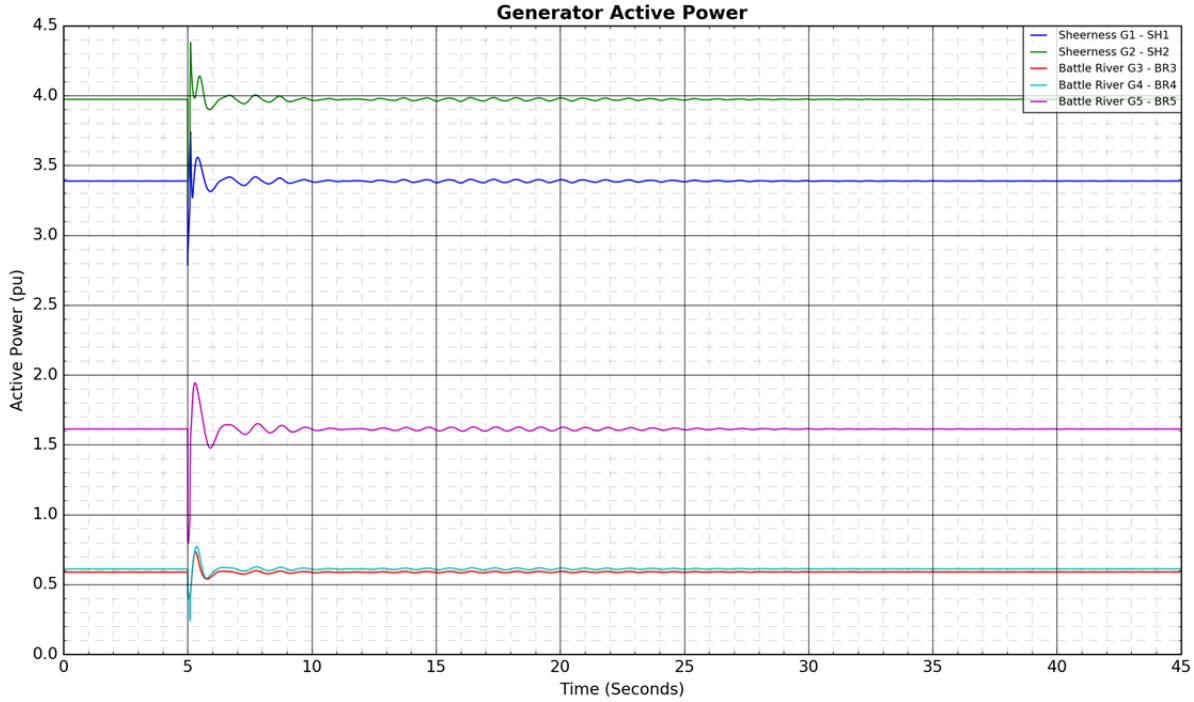
Generator Active Power
Active Power (pu)
Time (Seconds)
Sheerness G1 - SH1
Sheerness G2 - SH2
Battle River G3 - BR3
Battle River G4 - BR4
Battle River G5 - BR5

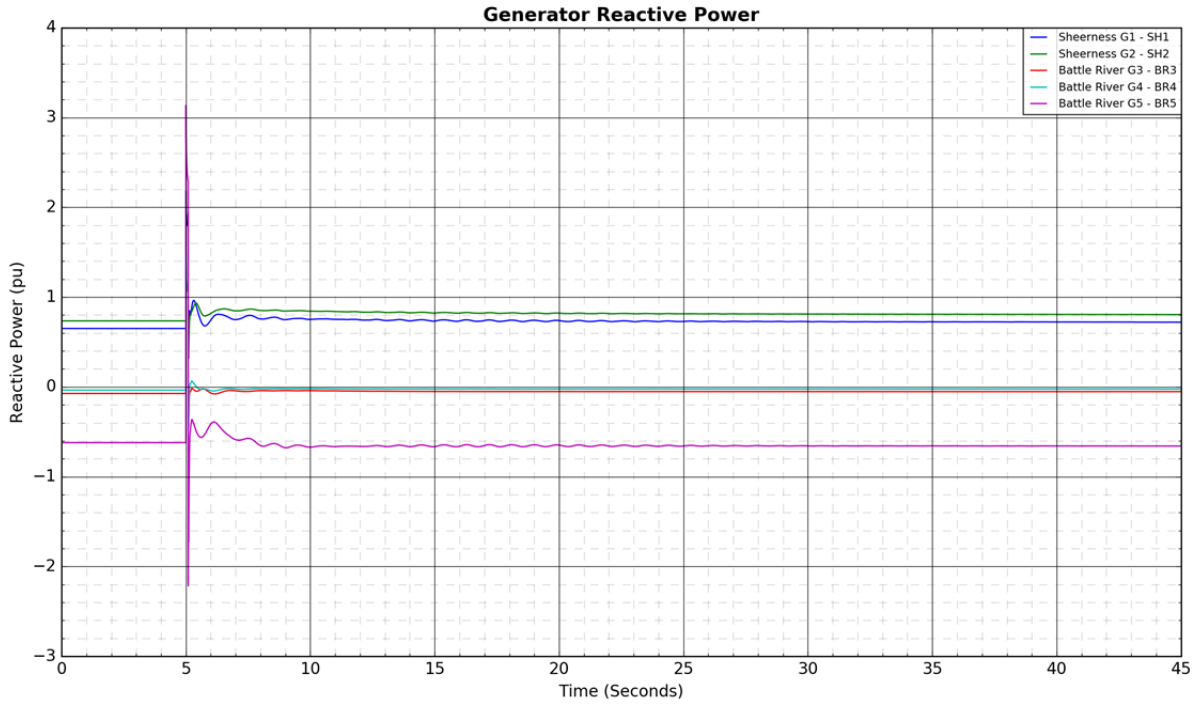
Generator Reactive Power
Sheerness G1 - SH1
Sheerness G2 - SH2
Battle River G3 - BR3
Battle River G4 - BR4
Battle River G5 - BR5
Reactive Power (pu)
Time (Seconds)

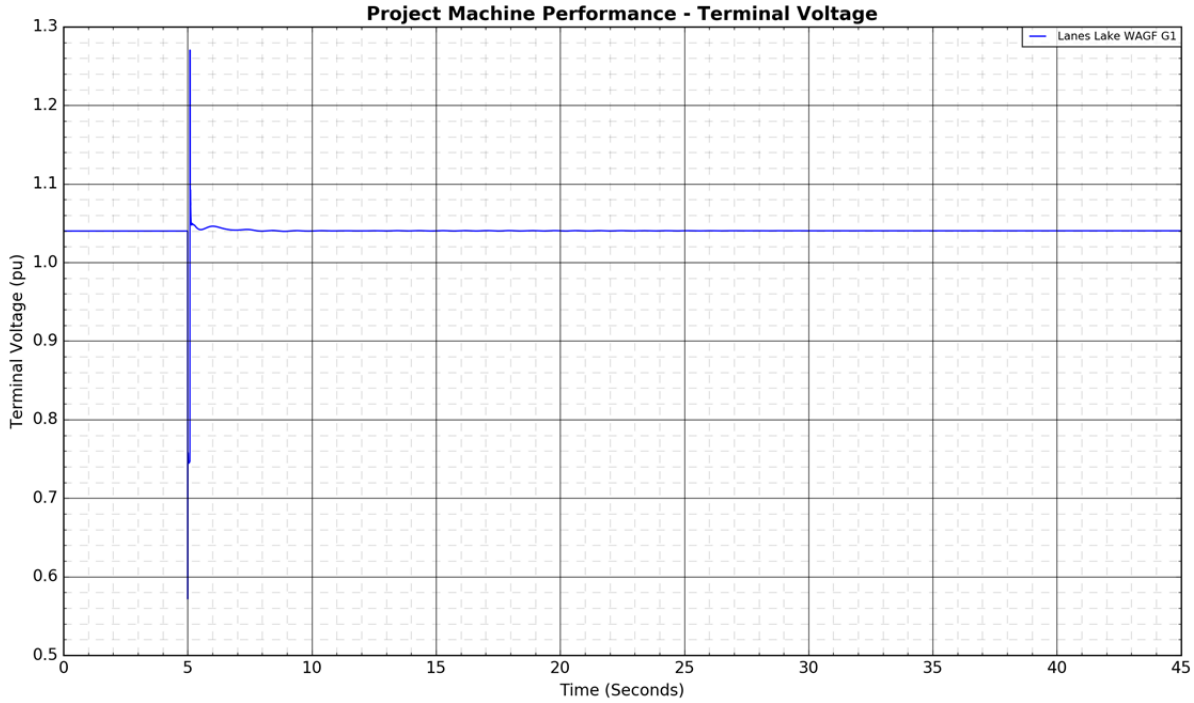
Project Machine Performance - Terminal Voltage
Lanes Lake WAGF G1
Terminal Voltage (pu)
Time (Seconds)


Project Machine Performance - Active Power
Lanes Lake WAGF G1
Active Power (pu)
Time (Seconds)
2.6
2.4
2.2
2.0
1.8
1.6
1.4
1.2
1.0
0.8
0
5
10
15
20
25
30
35
40
45

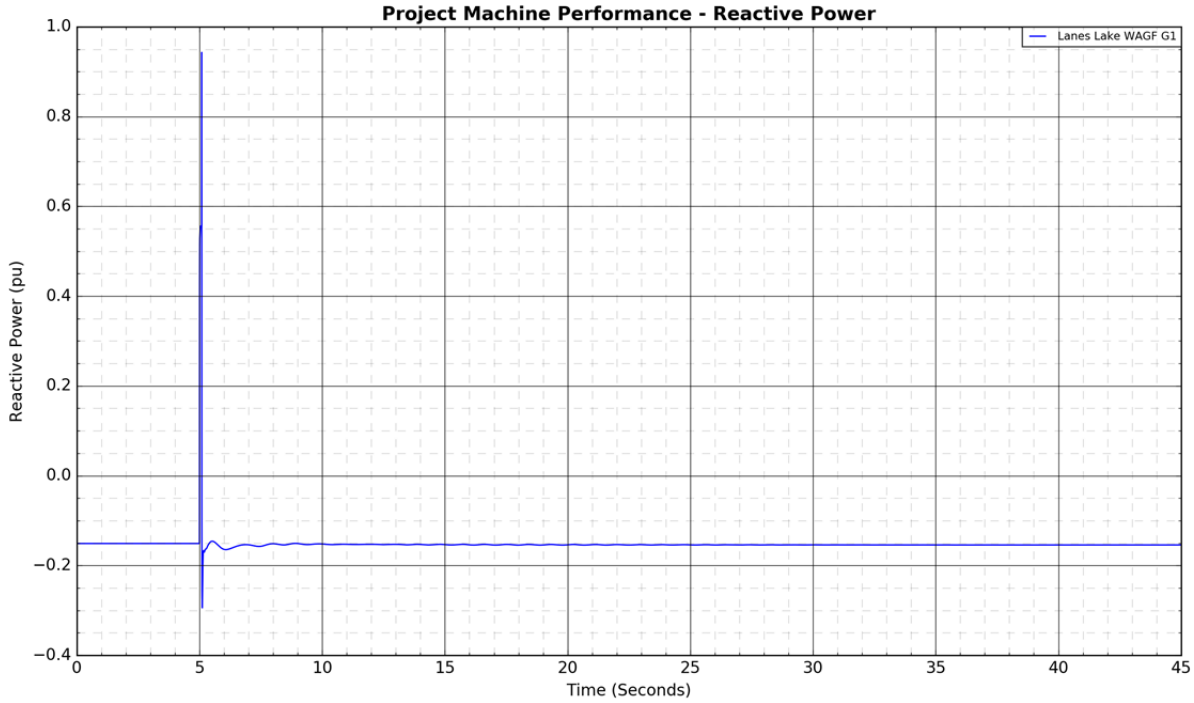
Project Machine Performance - Reactive Power
Lanes Lake WAGF G1
Reactive Power (pu)
Time (Seconds)
1.0
0.8
0.6
0.4
0.2
0.0
−0.2
−0.4
0
5
10
15
20
25
30
35
40
45


Branch Active Power Flows
9L93 (Pioneer 805S - Halkirk 615S)
9L175 (Pioneer 805S - Tincherbray 972S)
9L16 (Tincherbray 972S - Cordel 755S)
9L59 (Anderson 801S - Tinchebray 972S)
Active Power (MW)
Time (Seconds)

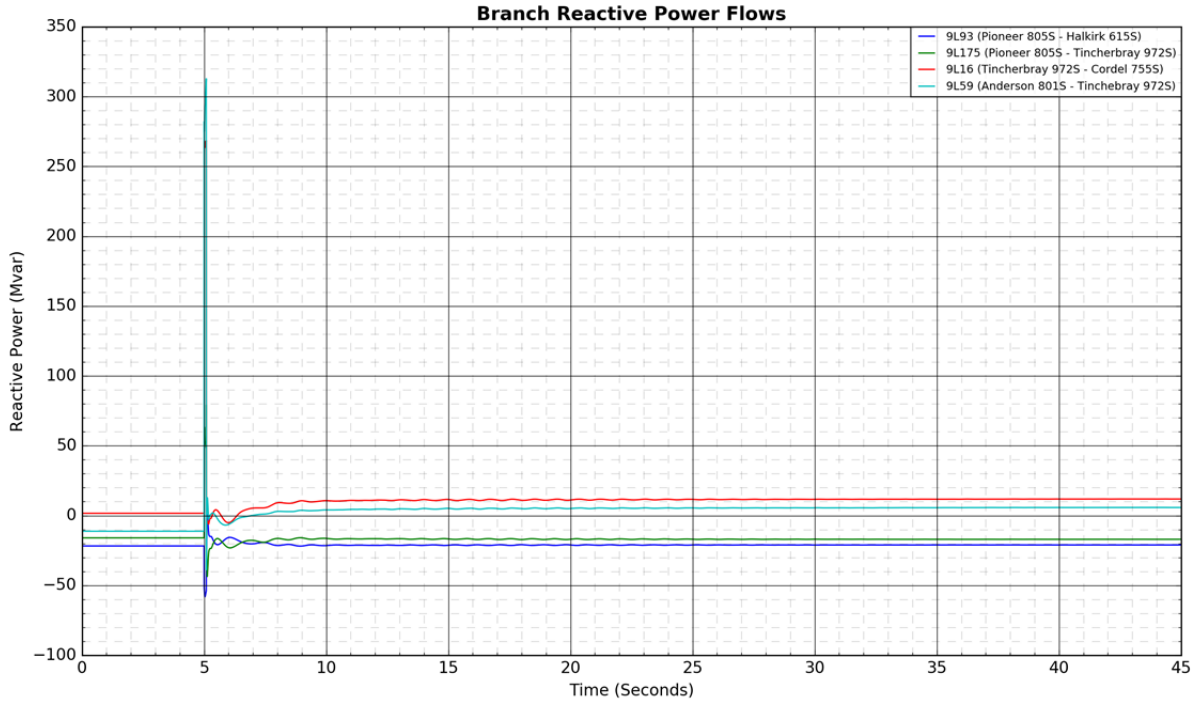
Branch Reactive Power Flows
9L93 (Pioneer 805S - Halkirk 615S)
9L175 (Pioneer 805S - Tincherbray 972S)
9L16 (Tincherbray 972S - Cordel 755S)
9L59 (Anderson 801S - Tinchebray 972S)
Reactive Power (Mvar)
Time (Seconds)

Figure A4-56: 912L\9L912 (Nevis 766S - Red Deer 63S): 3-phase fault at Red Deer 63S

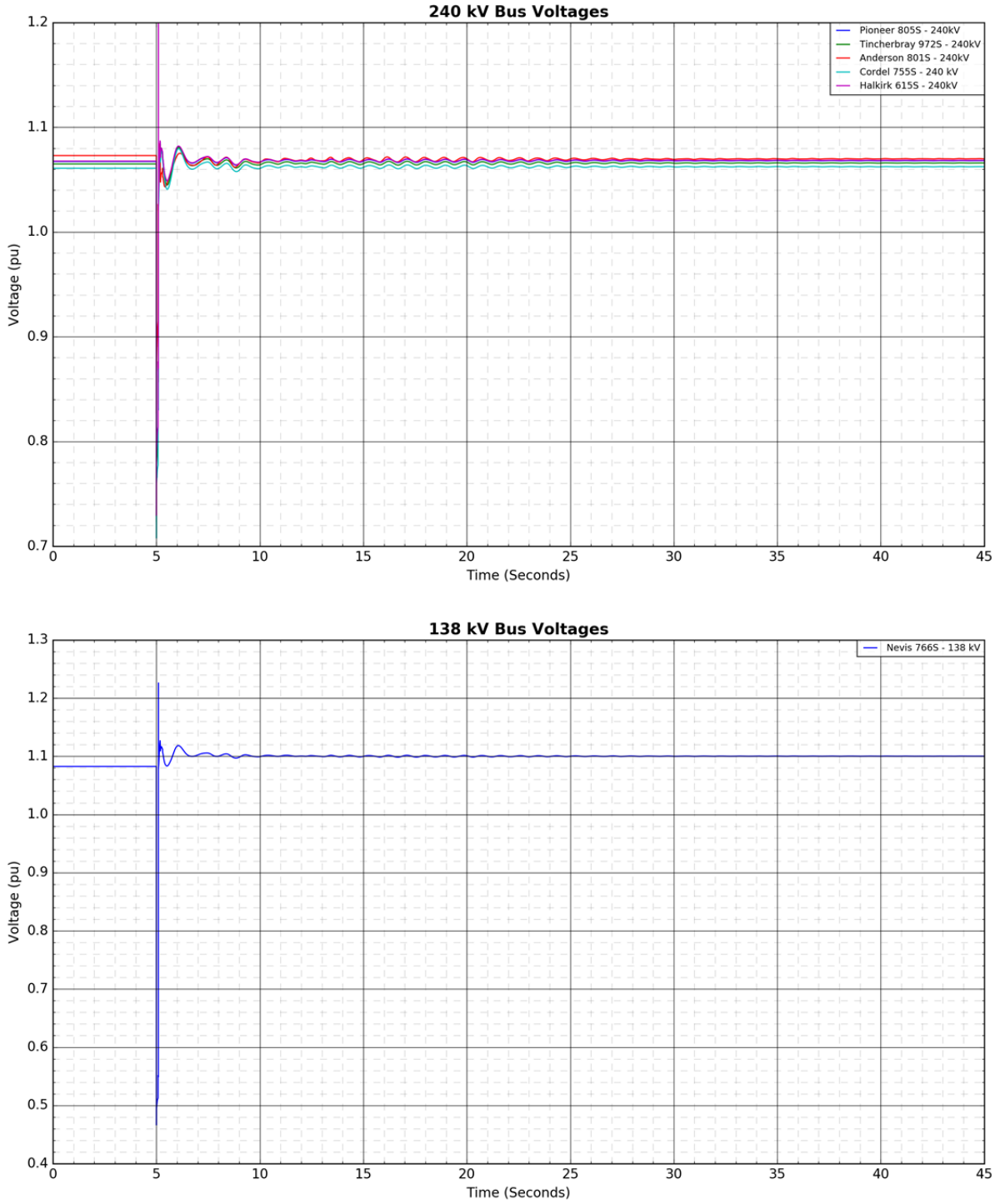

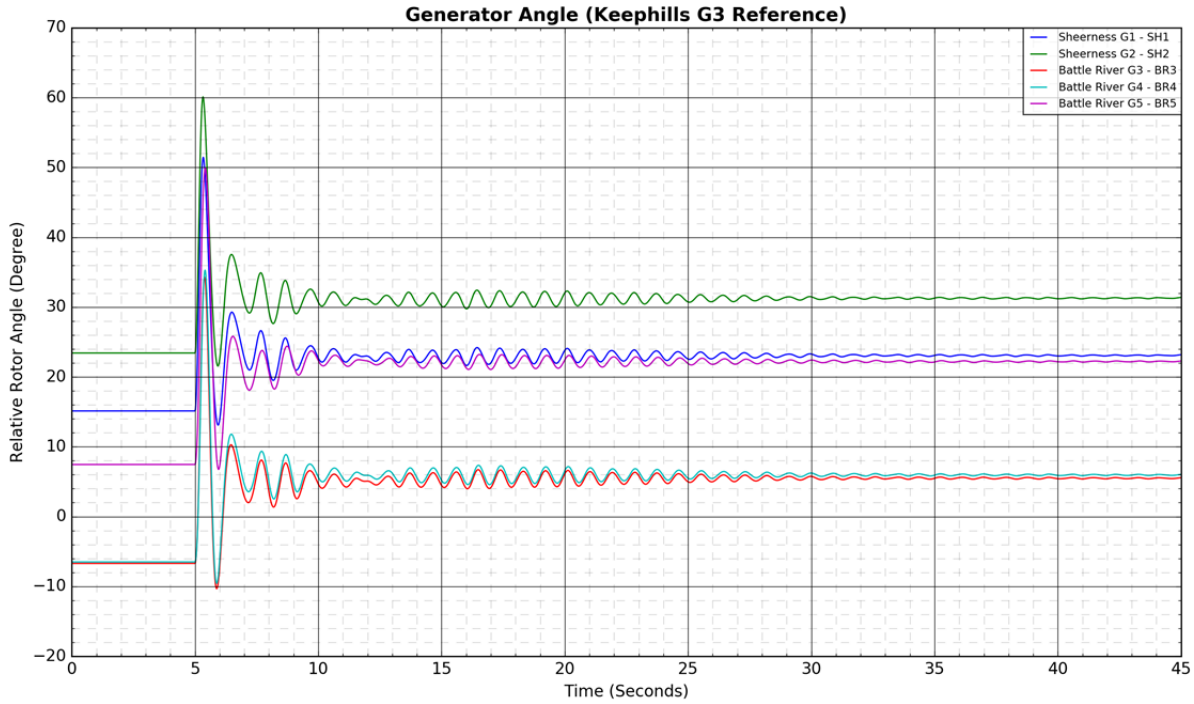
Generator Angle (Keephills G3 Reference)
Relative Rotor Angle (Degree)
Time (Seconds)
Sheerness G1 - SH1
Sheerness G2 - SH2
Battle River G3 - BR3
Battle River G4 - BR4
Battle River G5 - BR5

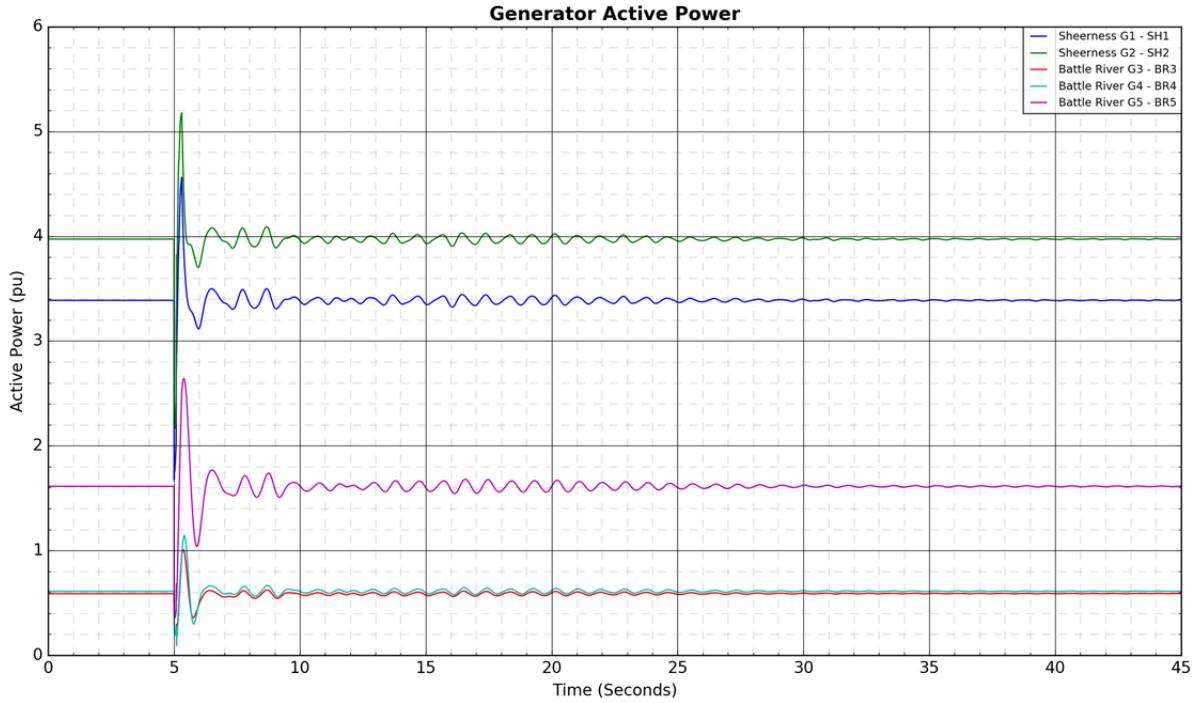
Generator Active Power
Active Power (pu)
Time (Seconds)
Sheerness G1 - SH1
Sheerness G2 - SH2
Battle River G3 - BR3
Battle River G4 - BR4
Battle River G5 - BR5

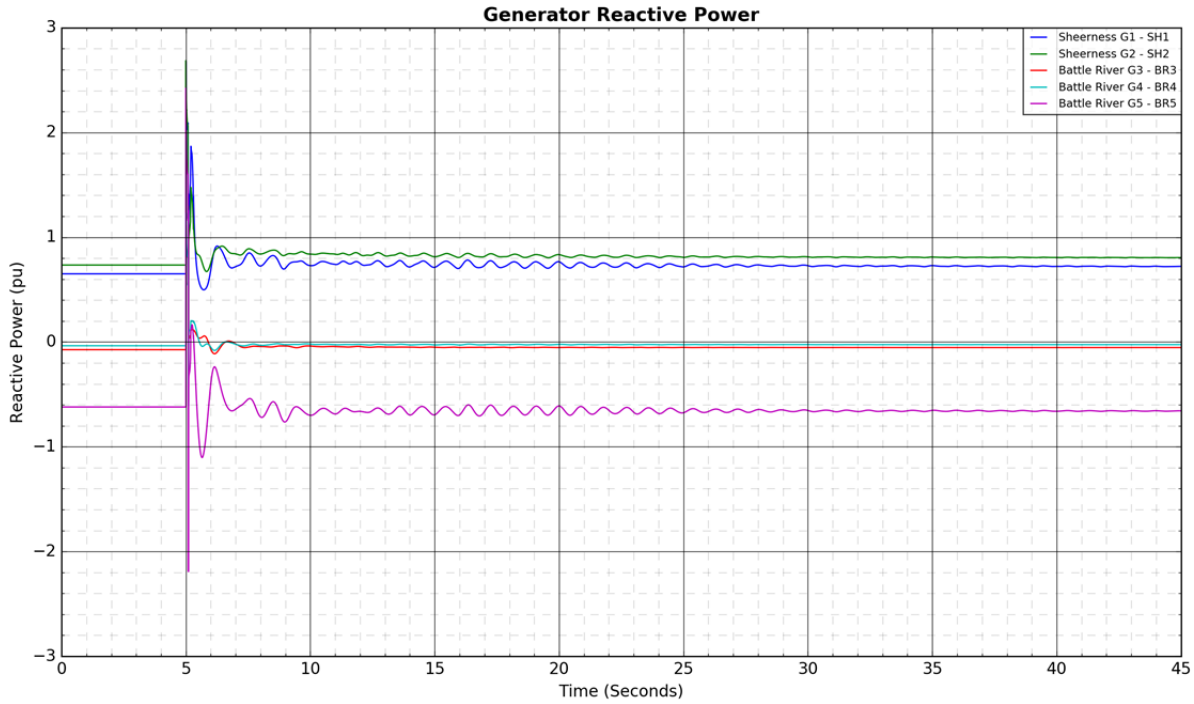
Generator Reactive Power
Sheerness G1 - SH1
Sheerness G2 - SH2
Battle River G3 - BR3
Battle River G4 - BR4
Battle River G5 - BR5
Reactive Power (pu)
Time (Seconds)
3
2
1
0
−1
−2
−3
0
5
10
15
20
25
30
35
40
45

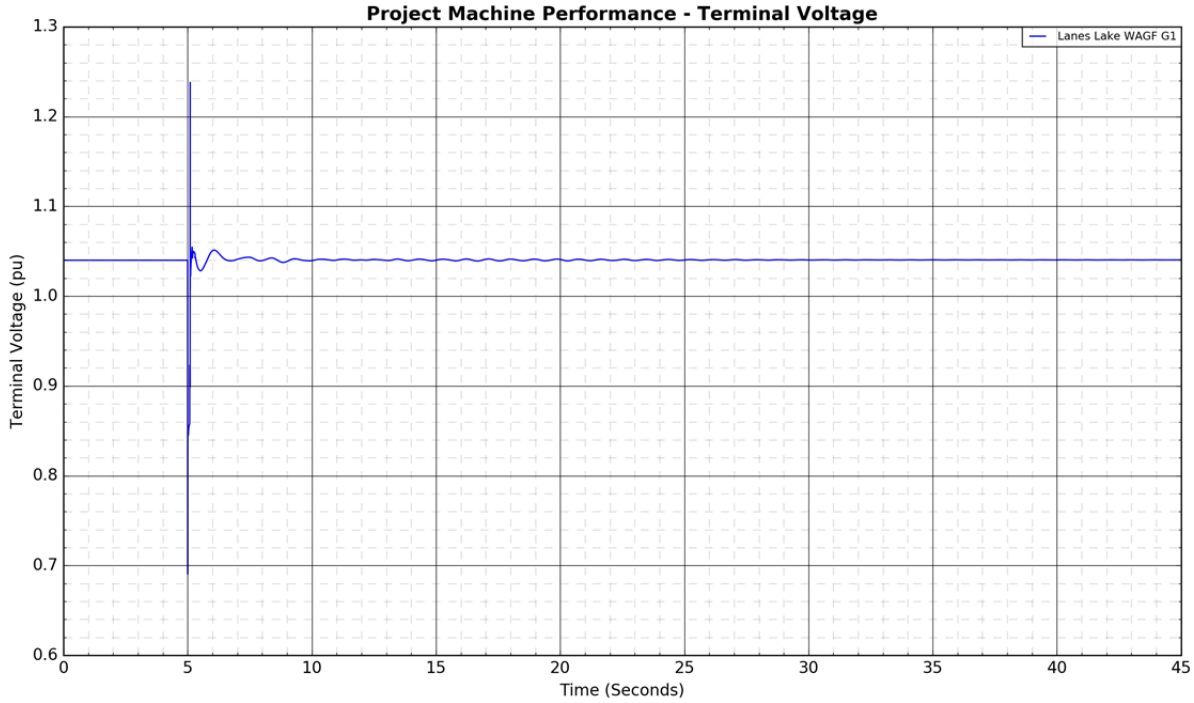
Project Machine Performance - Terminal Voltage
Lanes Lake WAGF G1
Terminal Voltage (pu)
Time (Seconds)
1.3
1.2
1.1
1.0
0.9
0.8
0.7
0.6
0
5
10
15
20
25
30
35
40
45


Project Machine Performance - Active Power
Lanes Lake WAGF G1
Active Power (pu)
Time (Seconds)
2.2
2.0
1.8
1.6
1.4
1.2
1.0
0.8
0
5
10
15
20
25
30
35
40
45

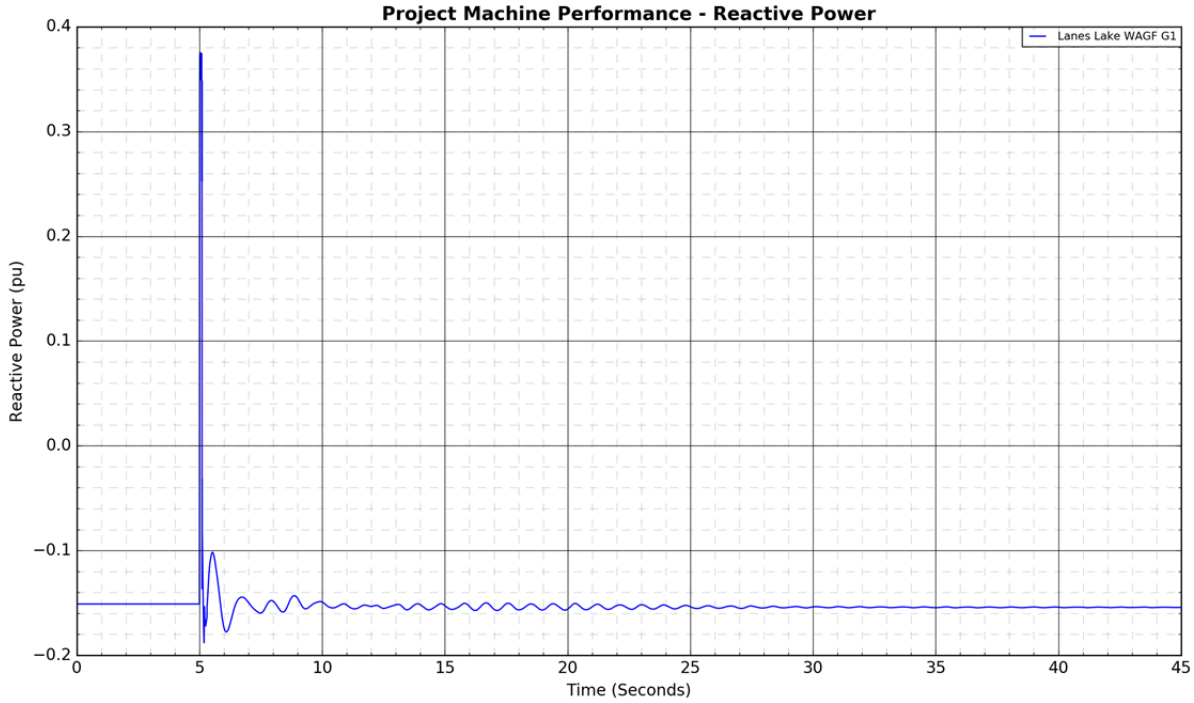
Project Machine Performance - Reactive Power
Lanes Lake WAGF G1
Reactive Power (pu)
Time (Seconds)
0.4
0.3
0.2
0.1
0.0
−0.1
−0.2
0
5
10
15
20
25
30
35
40
45

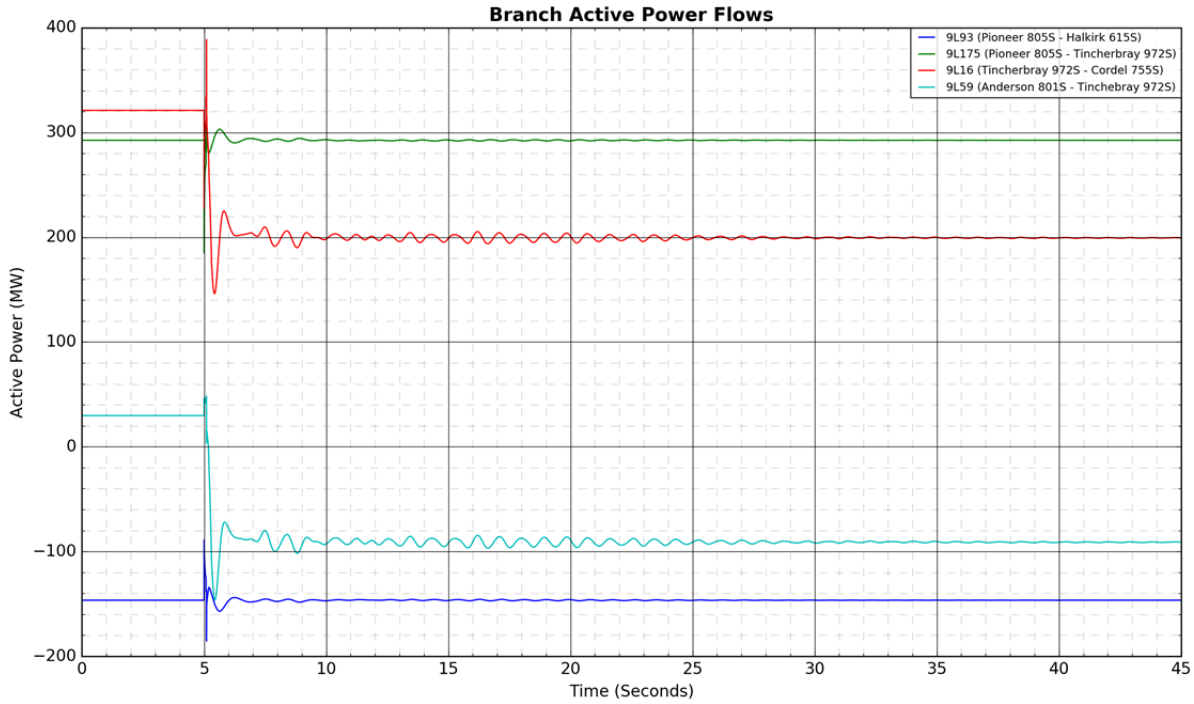
Branch Active Power Flows
9L93 (Pioneer 805S - Halkirk 615S)
9L175 (Pioneer 805S - Tincherbray 972S)
9L16 (Tincherbray 972S - Cordel 755S)
9L59 (Anderson 801S - Tinchebray 972S)
Active Power (MW)
Time (Seconds)

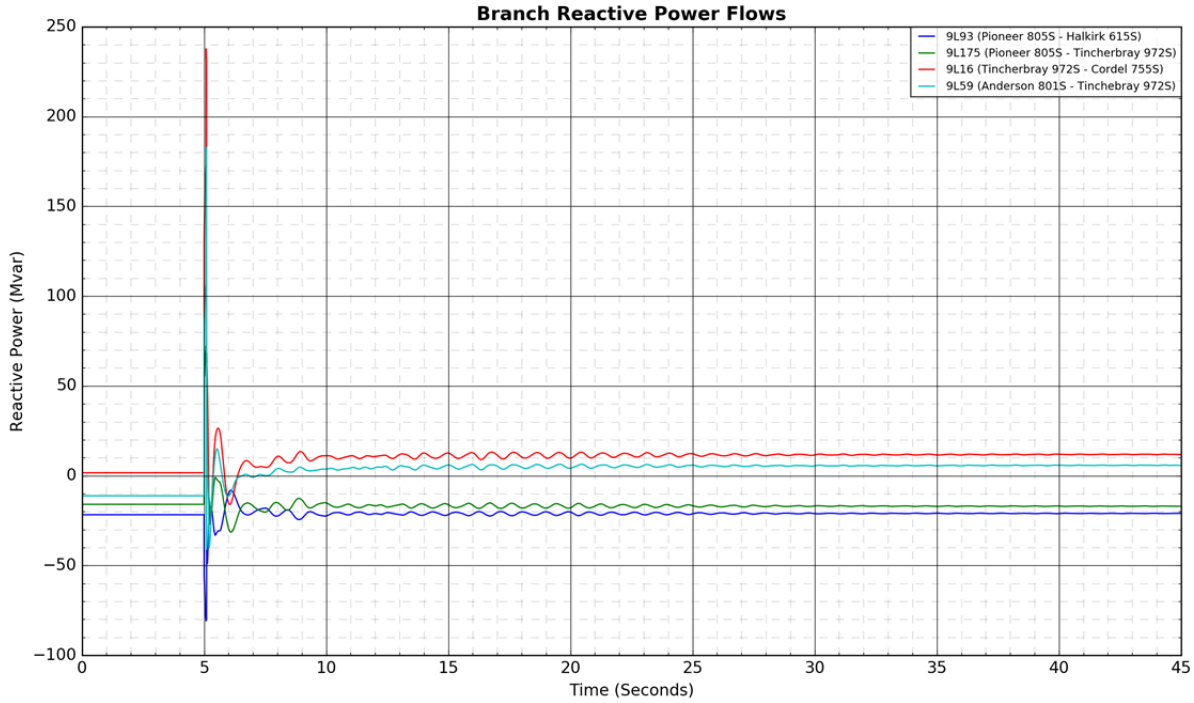
Branch Reactive Power Flows
9L93 (Pioneer 805S - Halkirk 615S)
9L175 (Pioneer 805S - Tincherbray 972S)
9L16 (Tincherbray 972S - Cordel 755S)
9L59 (Anderson 801S - Tinchebray 972S)
Reactive Power (Mvar)
Time (Seconds)

5. Stability Results 2019 Winter Peak - Case A

Figure A4-57: 9L24 (Oakland 946S - Lanfine 959S): 3-phase fault at Oakland 946S



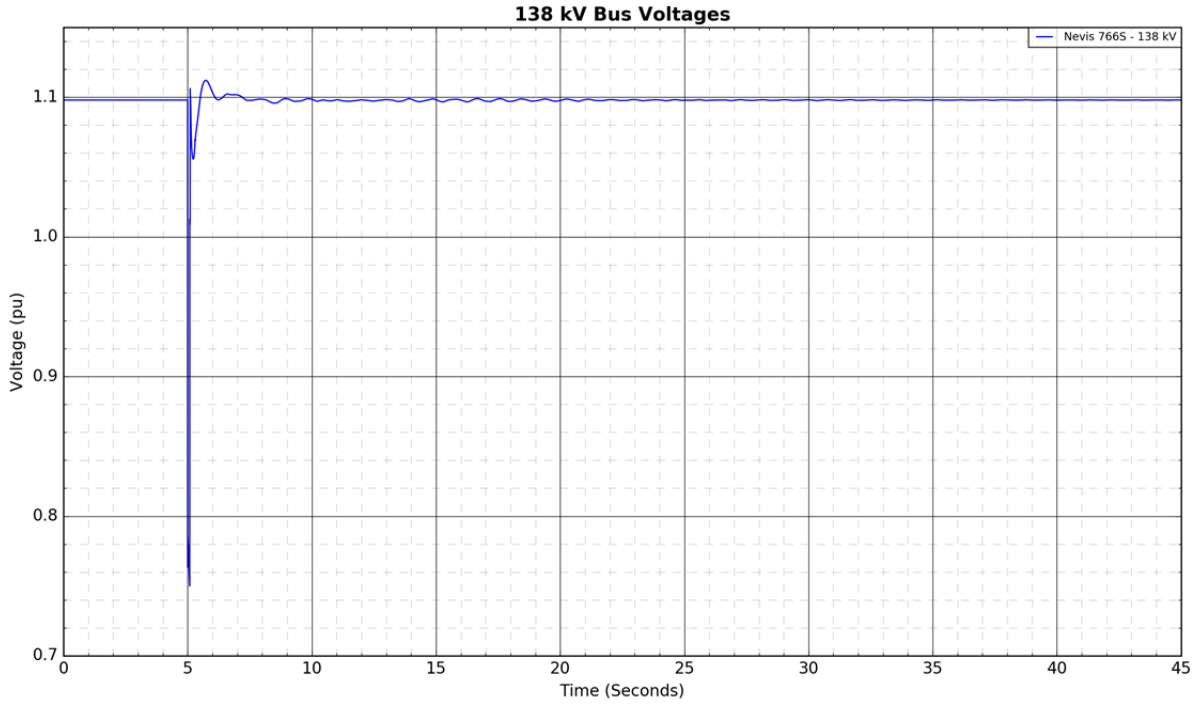

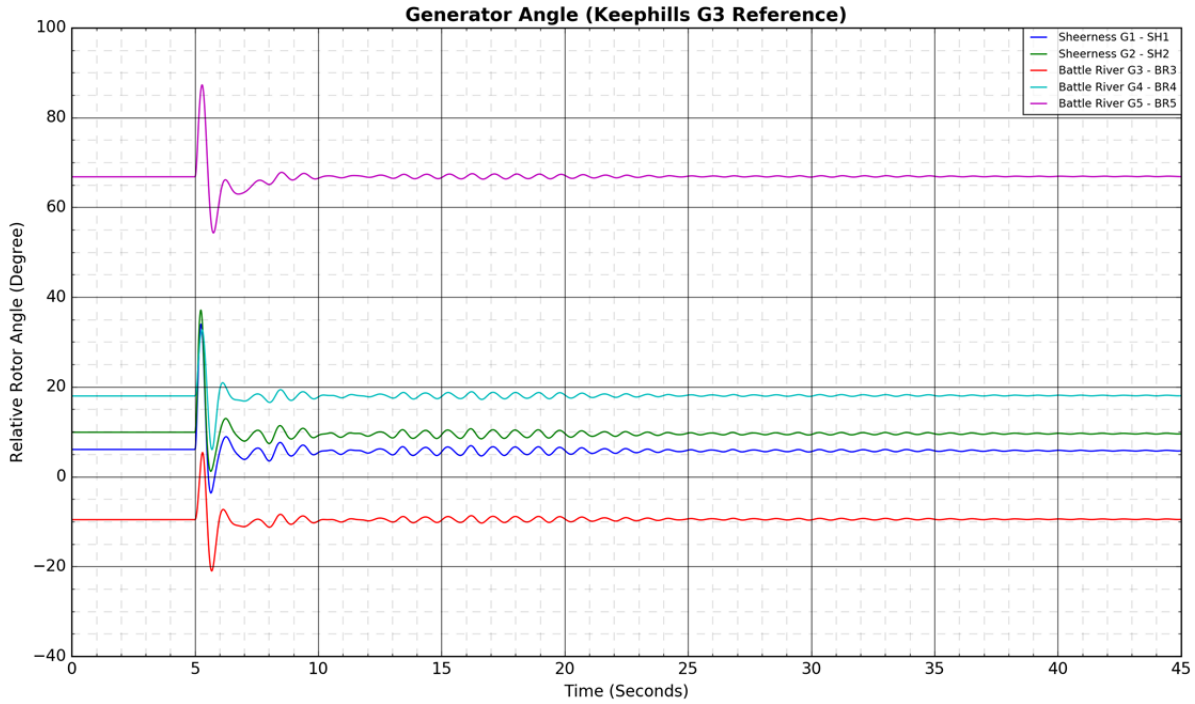
Generator Angle (Keephills G3 Reference)
Relative Rotor Angle (Degree)
Time (Seconds)
Sheerness G1 - SH1
Sheerness G2 - SH2
Battle River G3 - BR3
Battle River G4 - BR4
Battle River G5 - BR5

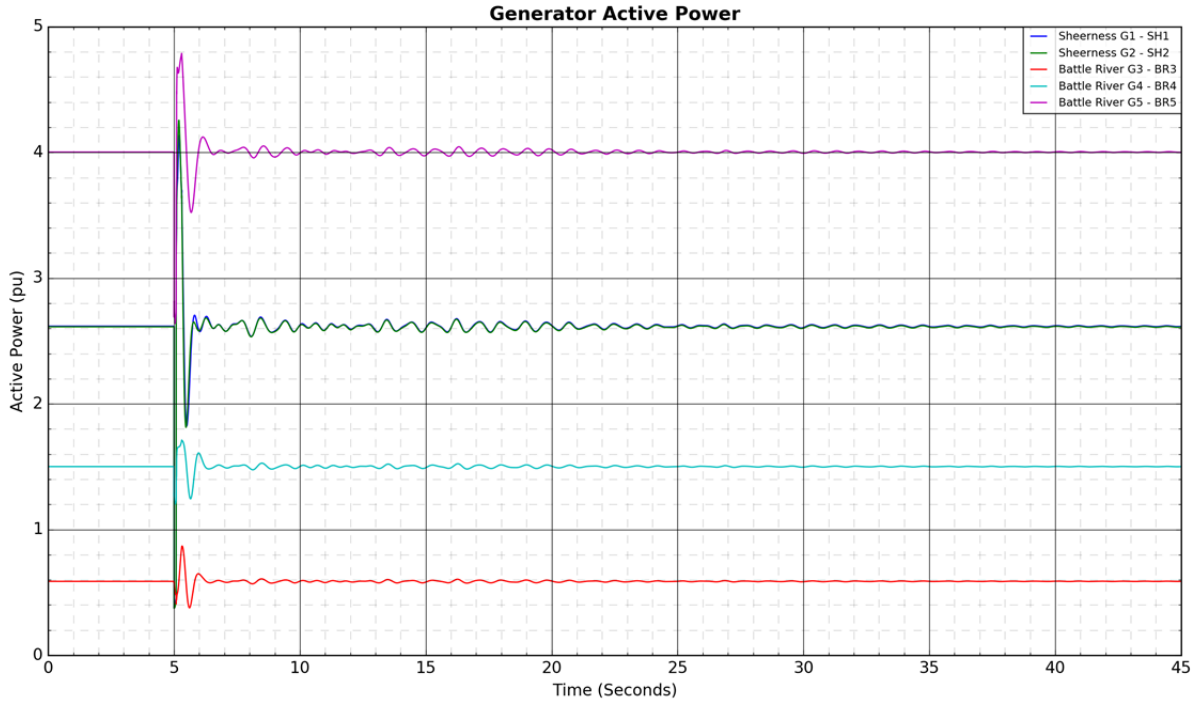
Generator Active Power
Active Power (pu)
Time (Seconds)
Sheerness G1 - SH1
Sheerness G2 - SH2
Battle River G3 - BR3
Battle River G4 - BR4
Battle River G5 - BR5

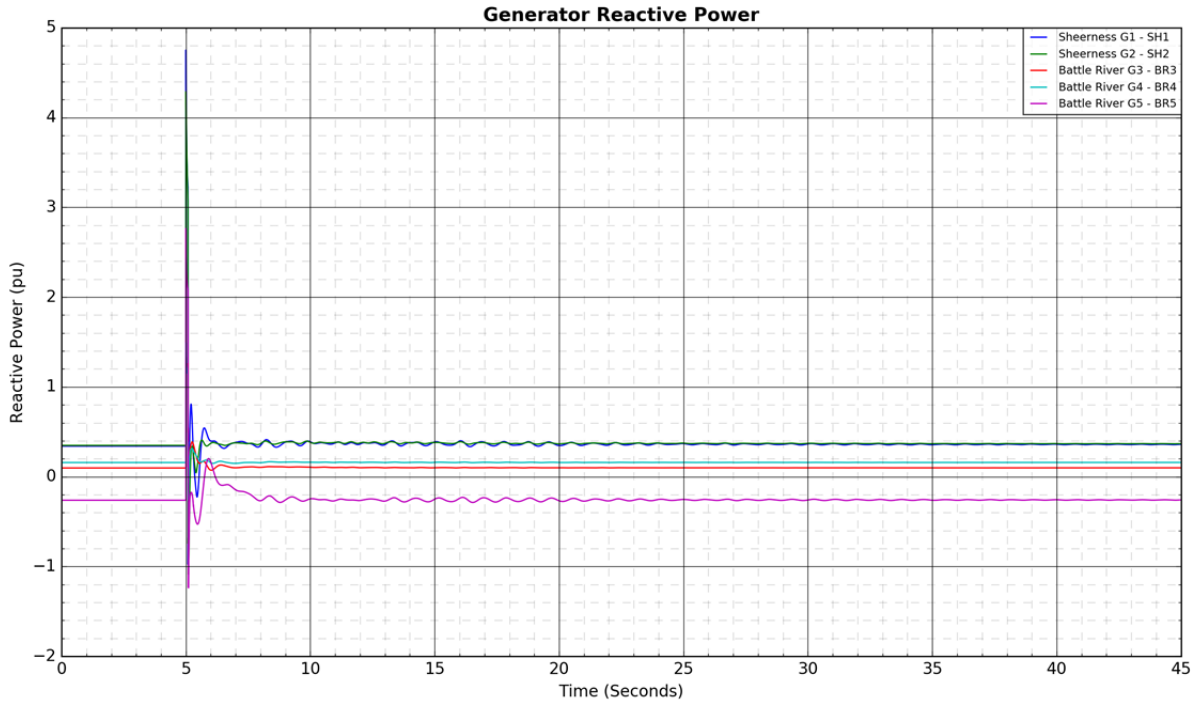
Generator Reactive Power
Sheerness G1 - SH1
Sheerness G2 - SH2
Battle River G3 - BR3
Battle River G4 - BR4
Battle River G5 - BR5
Reactive Power (pu)
Time (Seconds)

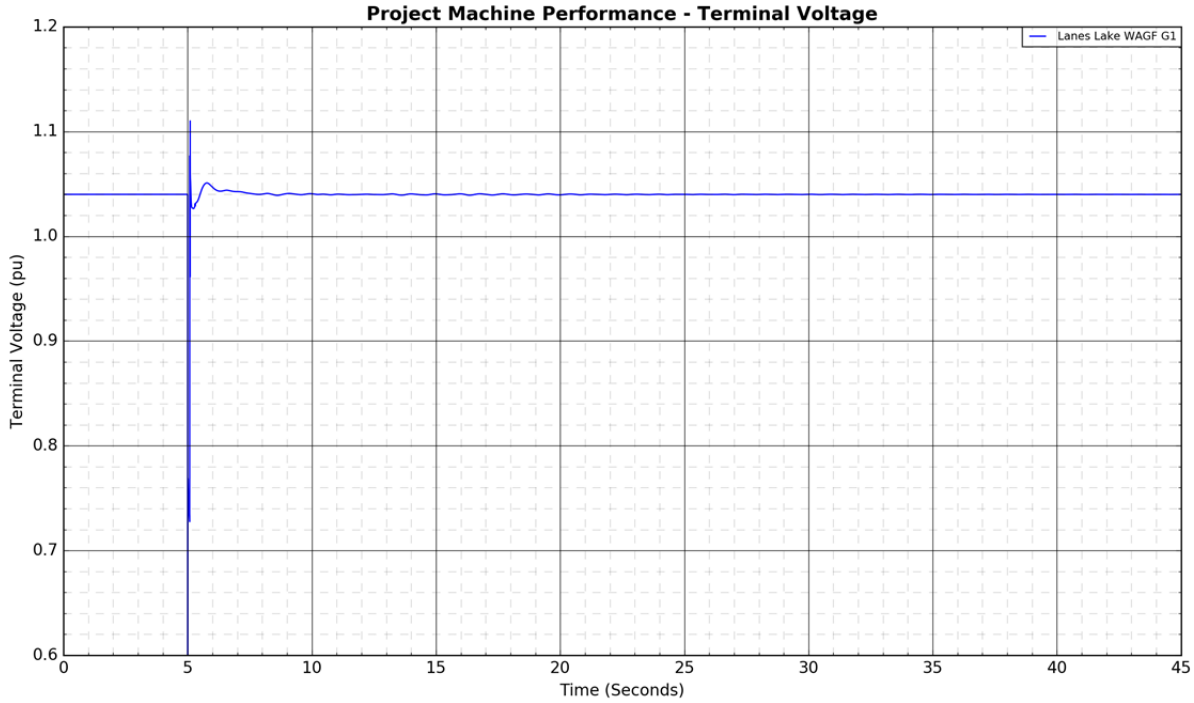
Project Machine Performance - Terminal Voltage
Lanes Lake WAGF G1
Terminal Voltage (pu)
Time (Seconds)


Project Machine Performance - Active Power
Lanes Lake WAGF G1
Active Power (pu)
Time (Seconds)
2.2
2.0
1.8
1.6
1.4
1.2
1.0
0.8
0
5
10
15
20
25
30
35
40
45

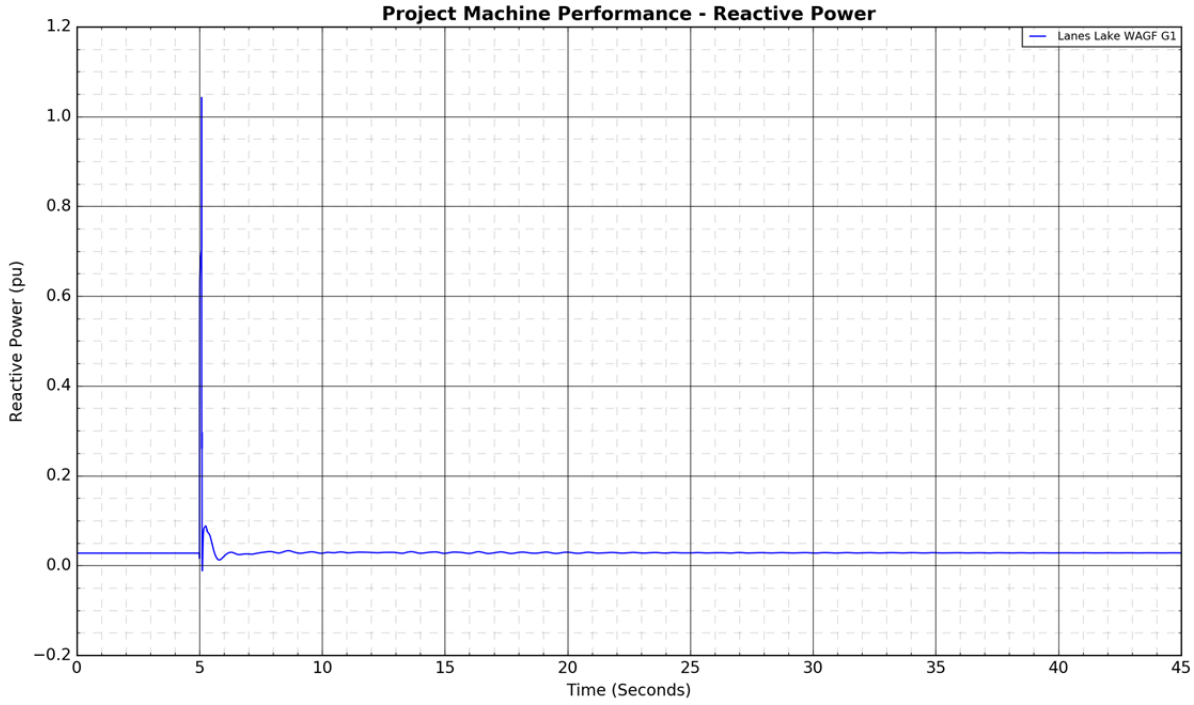
Project Machine Performance - Reactive Power
Lanes Lake WAGF G1
Reactive Power (pu)
Time (Seconds)
1.2
1.0
0.8
0.6
0.4
0.2
0.0
−0.2
0
5
10
15
20
25
30
35
40
45

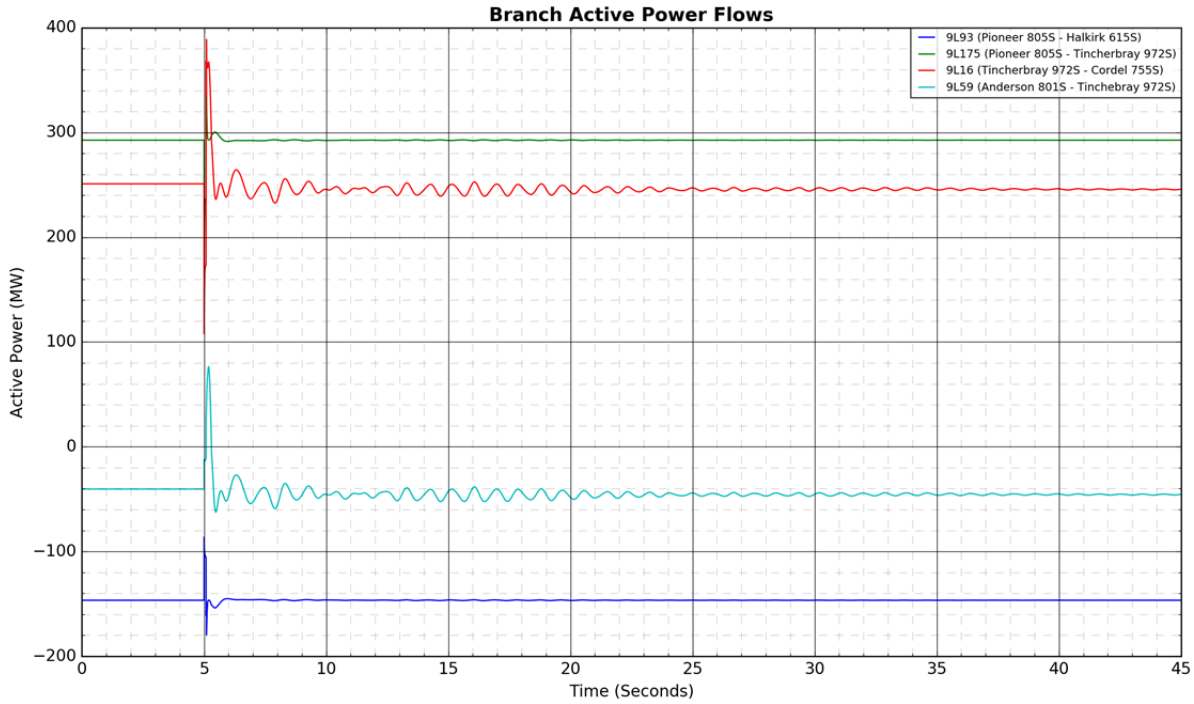
Branch Active Power Flows
9L93 (Pioneer 805S - Halkirk 615S)
9L175 (Pioneer 805S - Tincherbray 972S)
9L16 (Tincherbray 972S - Cordel 755S)
9L59 (Anderson 801S - Tinchebray 972S)
Active Power (MW)
Time (Seconds)

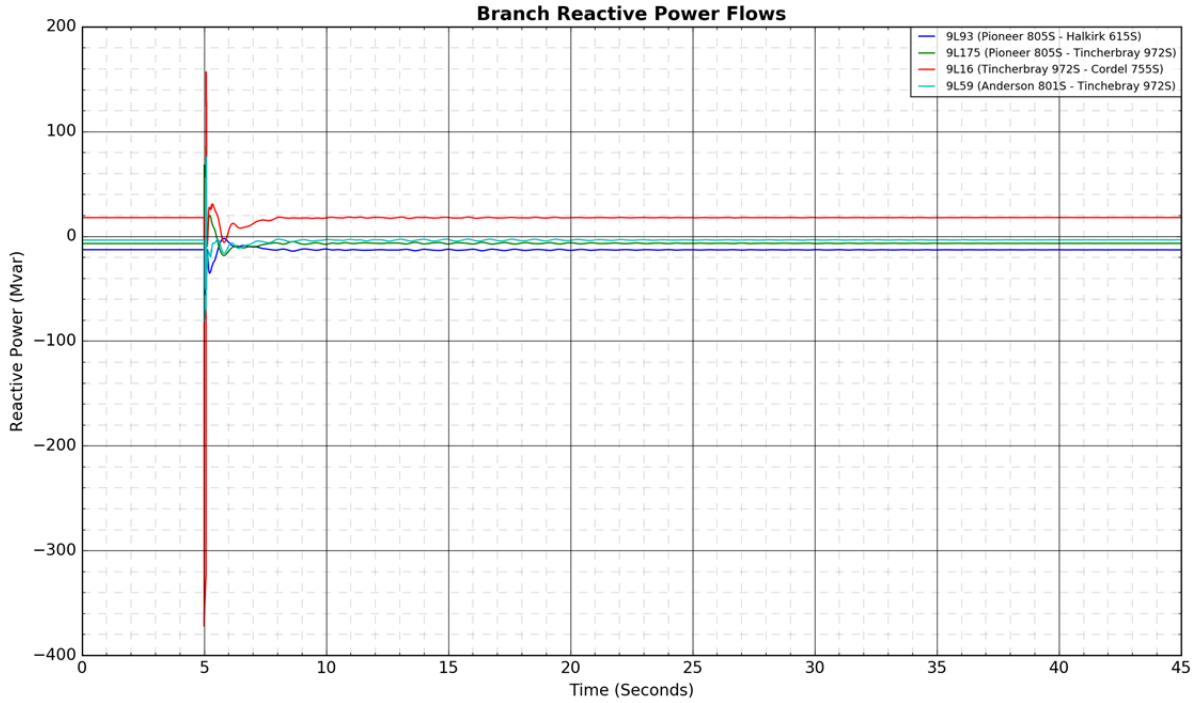
Branch Reactive Power Flows
9L93 (Pioneer 805S - Halkirk 615S)
9L175 (Pioneer 805S - Tincherbray 972S)
9L16 (Tincherbray 972S - Cordel 755S)
9L59 (Anderson 801S - Tinchebray 972S)
Reactive Power (Mvar)
Time (Seconds)

Figure A4-58: 9L24 (Oakland 946S - Lanfine 959S): 3-phase fault at Lanfine 959S

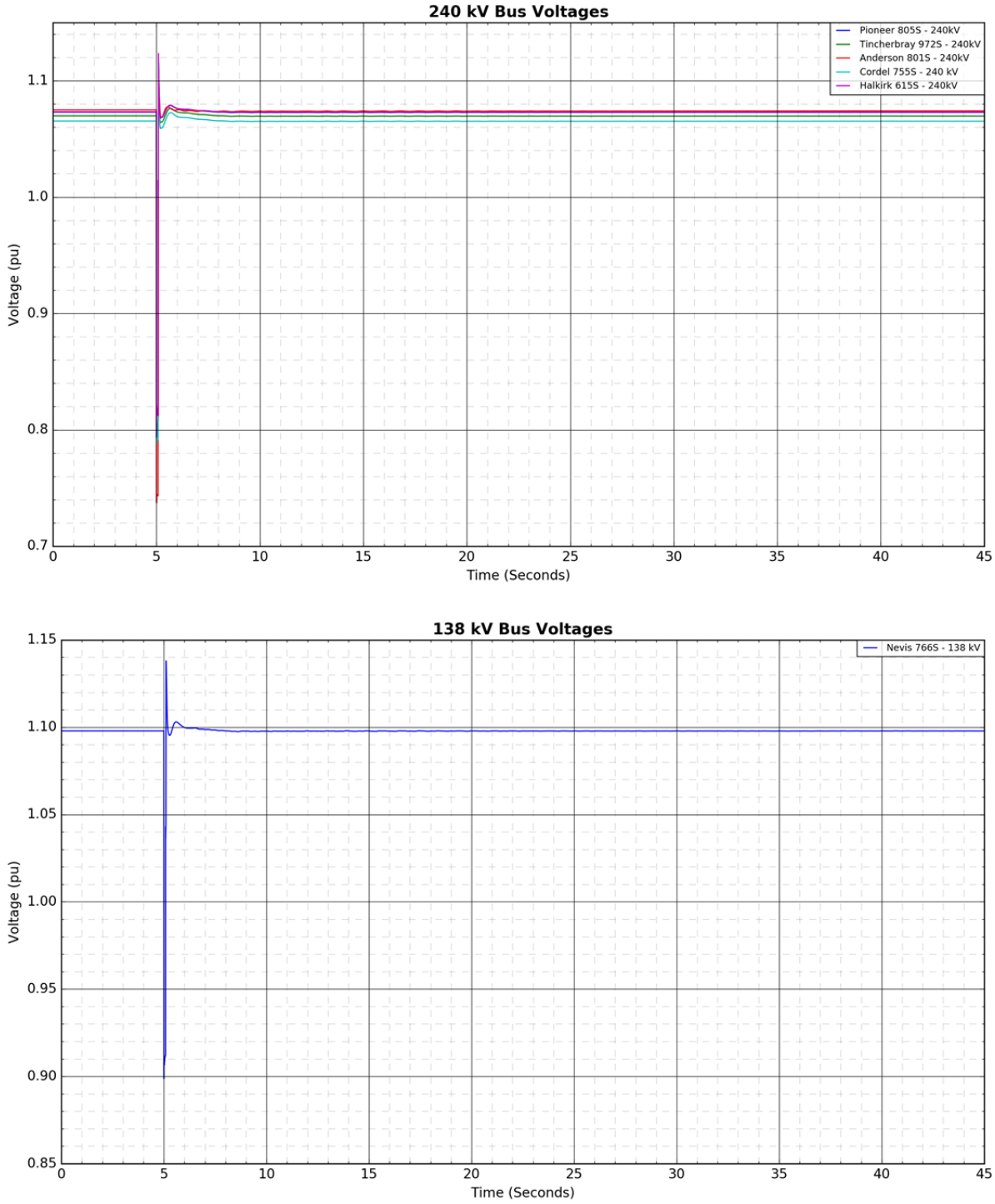

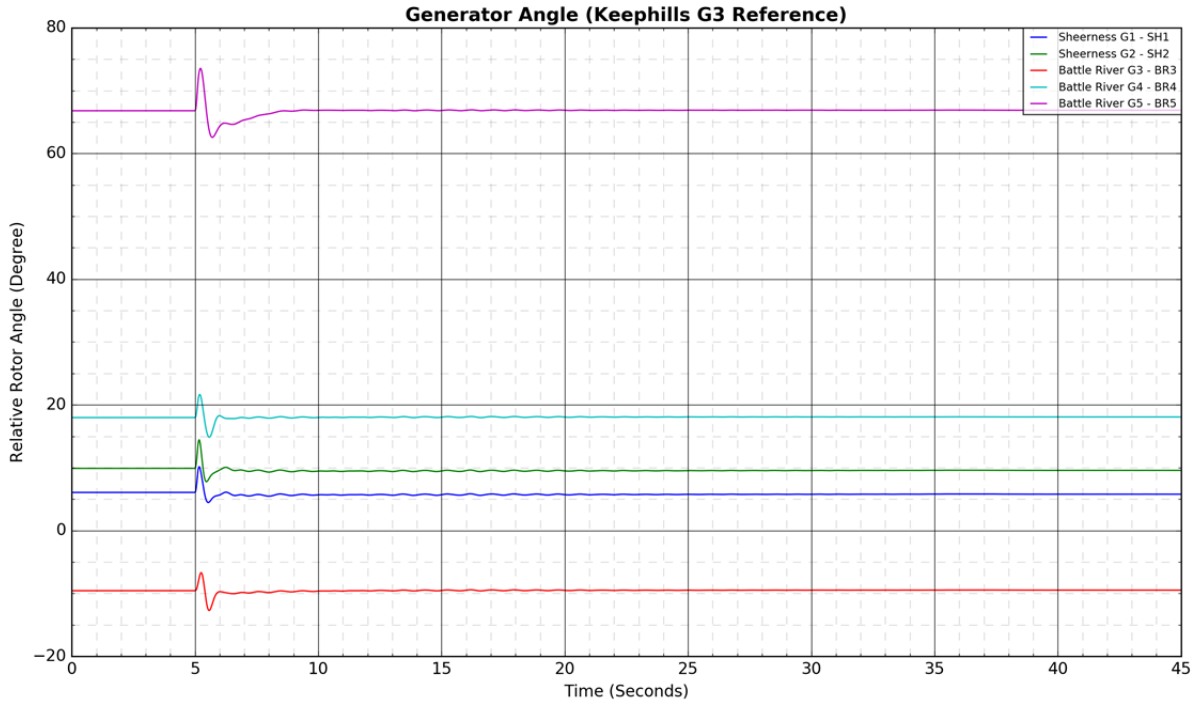
Generator Angle (Keephills G3 Reference)
Relative Rotor Angle (Degree)
Time (Seconds)
Sheerness G1 - SH1
Sheerness G2 - SH2
Battle River G3 - BR3
Battle River G4 - BR4
Battle River G5 - BR5

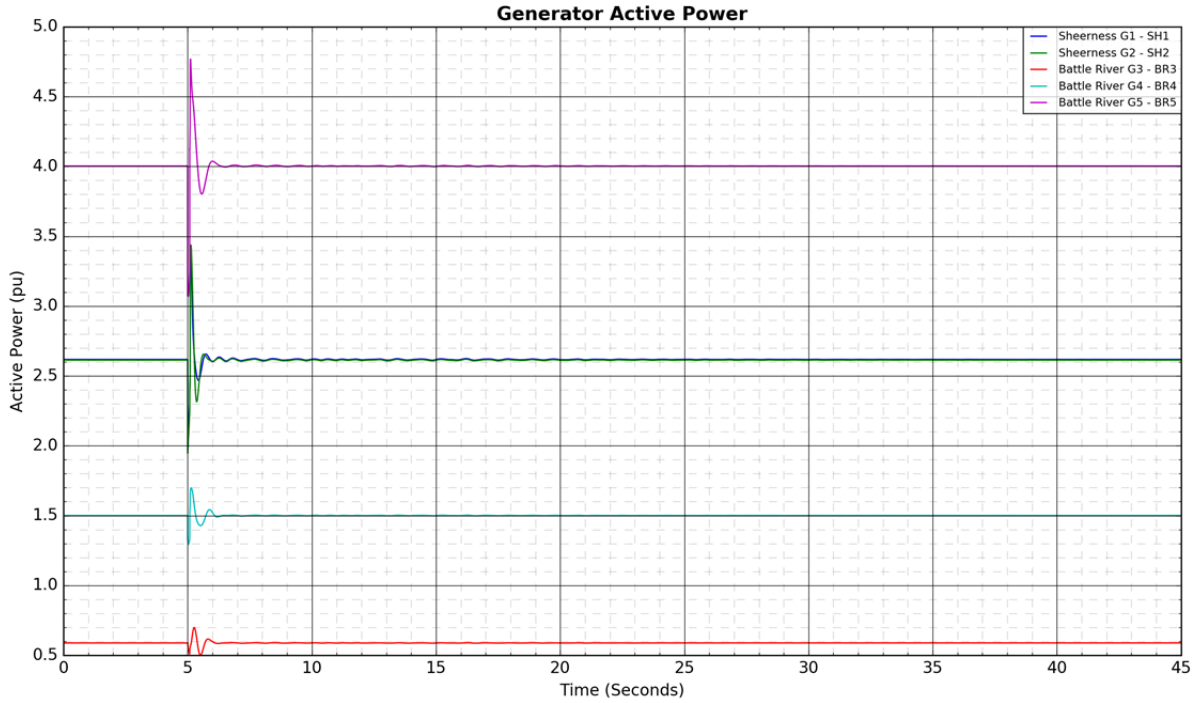
Generator Active Power
Active Power (pu)
Time (Seconds)
Sheerness G1 - SH1
Sheerness G2 - SH2
Battle River G3 - BR3
Battle River G4 - BR4
Battle River G5 - BR5

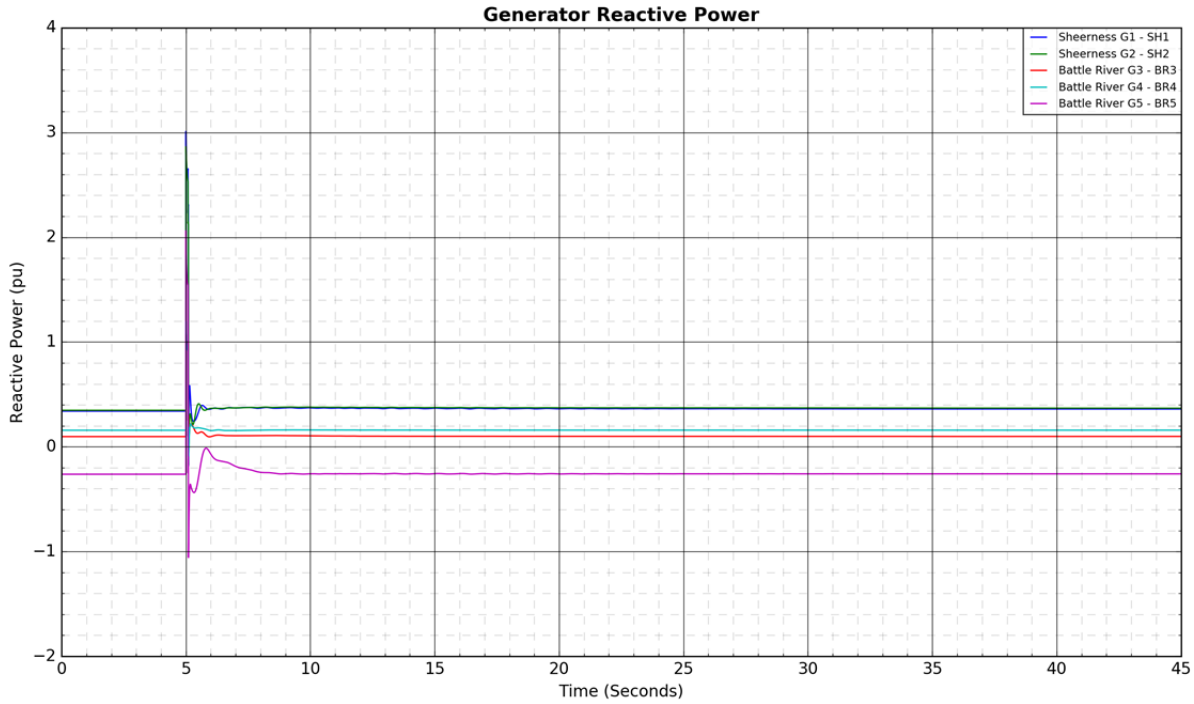
Generator Reactive Power
Sheerness G1 - SH1
Sheerness G2 - SH2
Battle River G3 - BR3
Battle River G4 - BR4
Battle River G5 - BR5
Reactive Power (pu)
Time (Seconds)

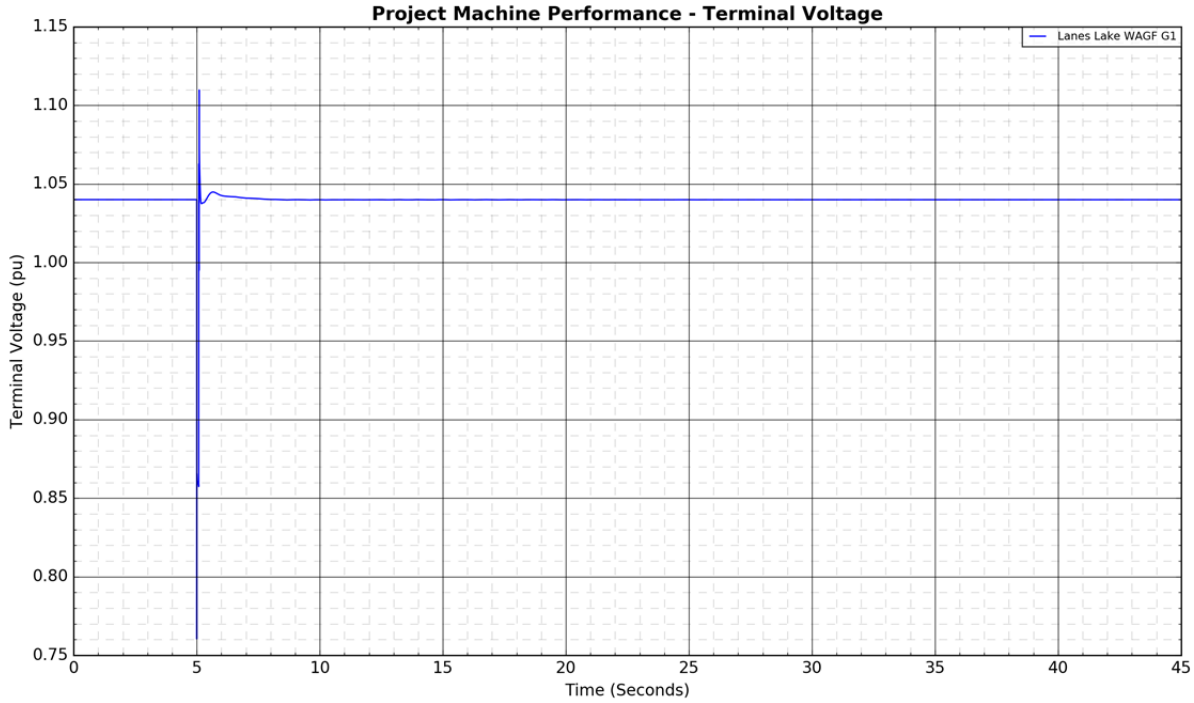
Project Machine Performance - Terminal Voltage
Lanes Lake WAGF G1
Terminal Voltage (pu)
Time (Seconds)


Project Machine Performance - Active Power
Lanes Lake WAGF G1
Active Power (pu)
1.9
1.8
1.7
1.6
1.5
1.4
1.3
1.2
1.1
1.0
0
5
10
15
20
25
30
35
40
45
Time (Seconds)

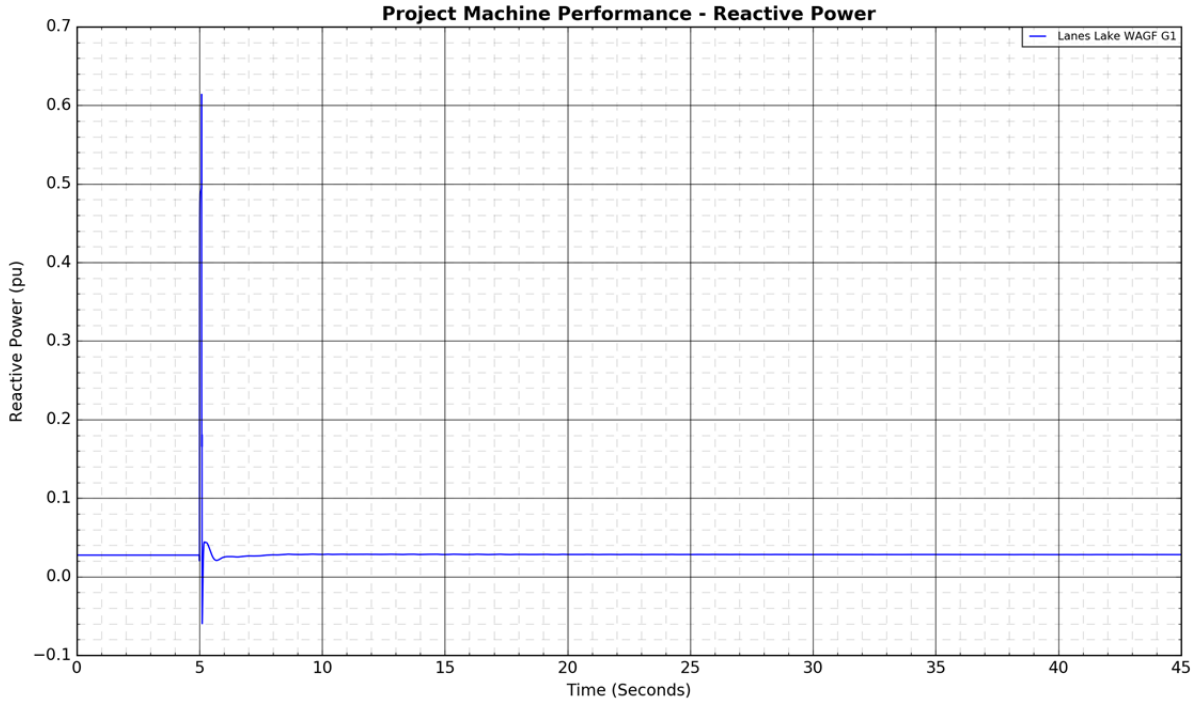
Project Machine Performance - Reactive Power
Lanes Lake WAGF G1
Reactive Power (pu)
0.7
0.6
0.5
0.4
0.3
0.2
0.1
0.0
−0.1
0
5
10
15
20
25
30
35
40
45
Time (Seconds)


Branch Active Power Flows
9L93 (Pioneer 805S - Halkirk 615S)
9L175 (Pioneer 805S - Tincherbray 972S)
9L16 (Tincherbray 972S - Cordel 755S)
9L59 (Anderson 801S - Tinchebray 972S)
Active Power (MW)
Time (Seconds)

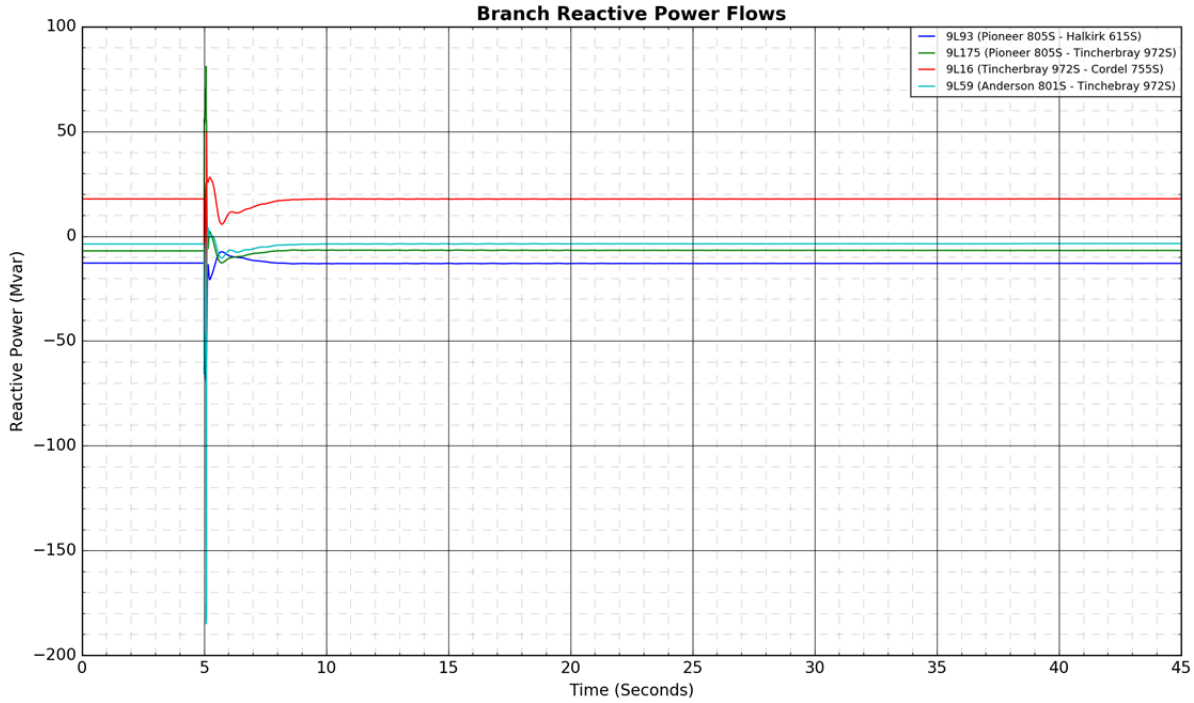
Branch Reactive Power Flows
9L93 (Pioneer 805S - Halkirk 615S)
9L175 (Pioneer 805S - Tincherbray 972S)
9L16 (Tincherbray 972S - Cordel 755S)
9L59 (Anderson 801S - Tinchebray 972S)
Reactive Power (Mvar)
Time (Seconds)

Figure A4-52: 9L59 (Anderson 801S - Tinchebray 972S): 3-phase fault at Tinchebray 972S

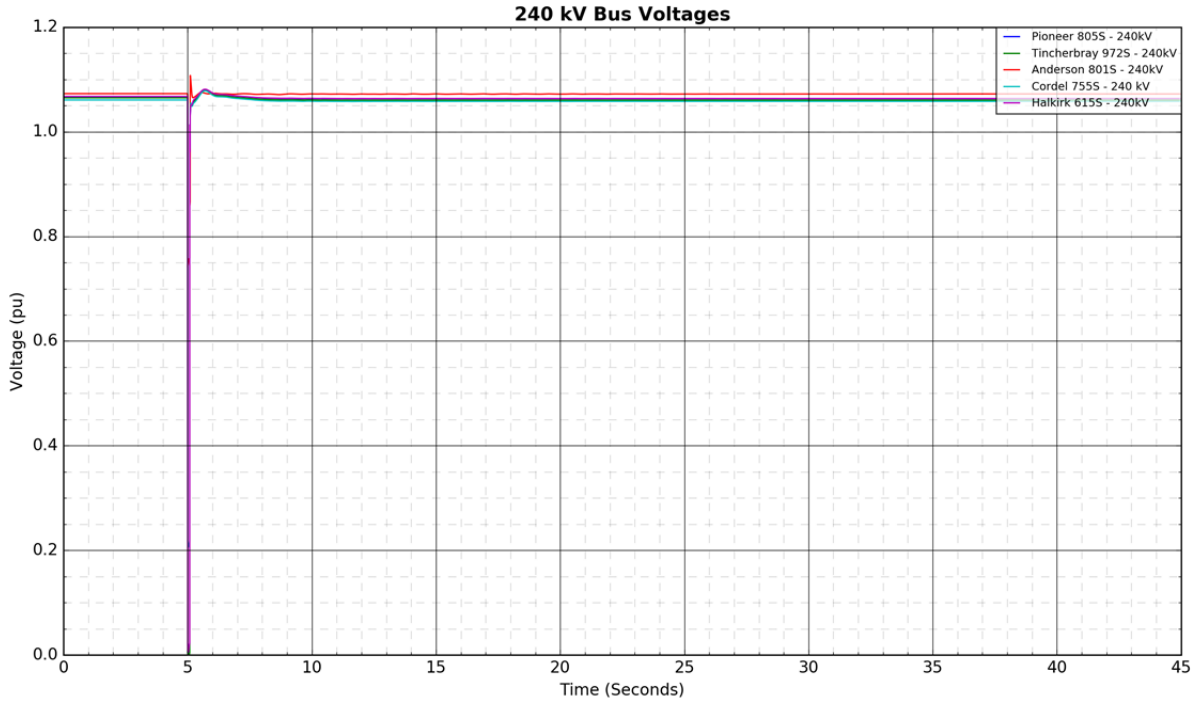

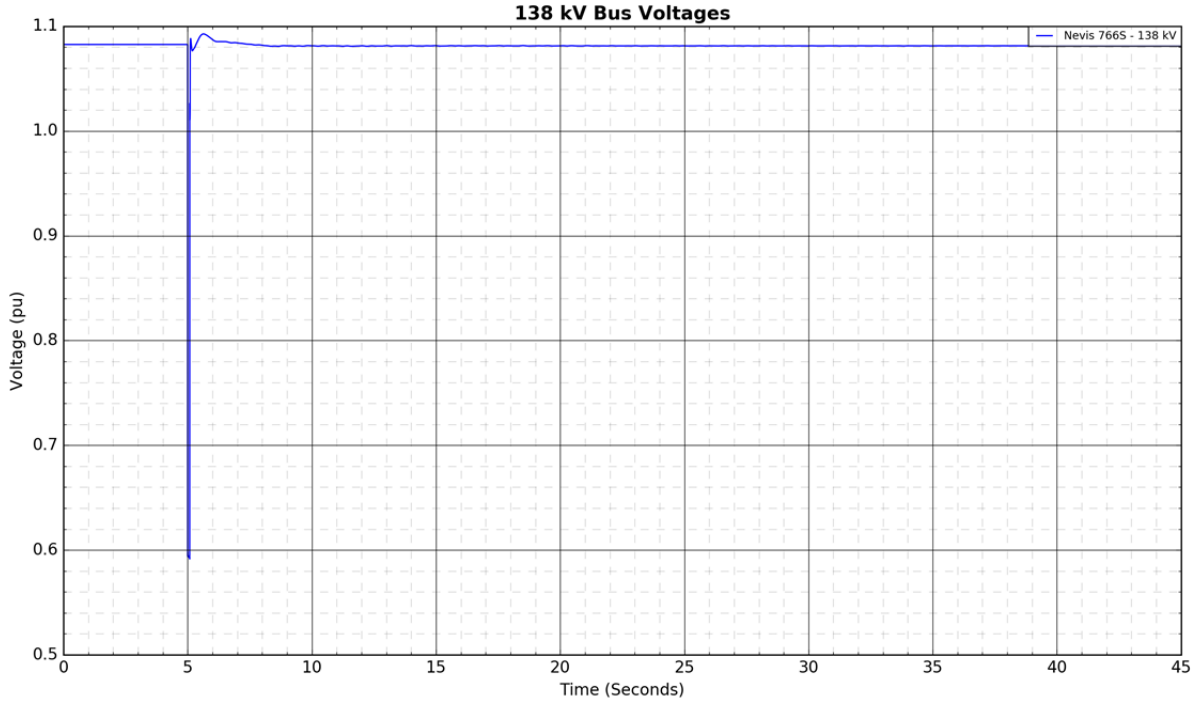

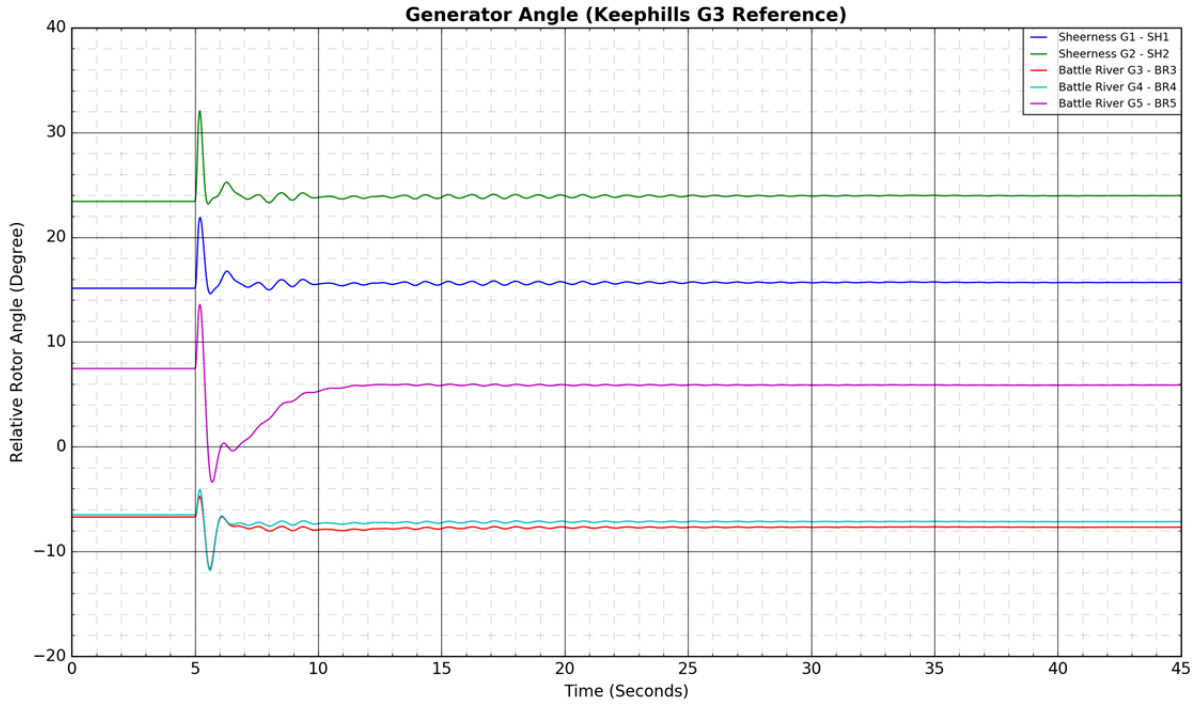
Generator Angle (Keephills G3 Reference)
Relative Rotor Angle (Degree)
Time (Seconds)
Sheerness G1 - SH1
Sheerness G2 - SH2
Battle River G3 - BR3
Battle River G4 - BR4
Battle River G5 - BR5

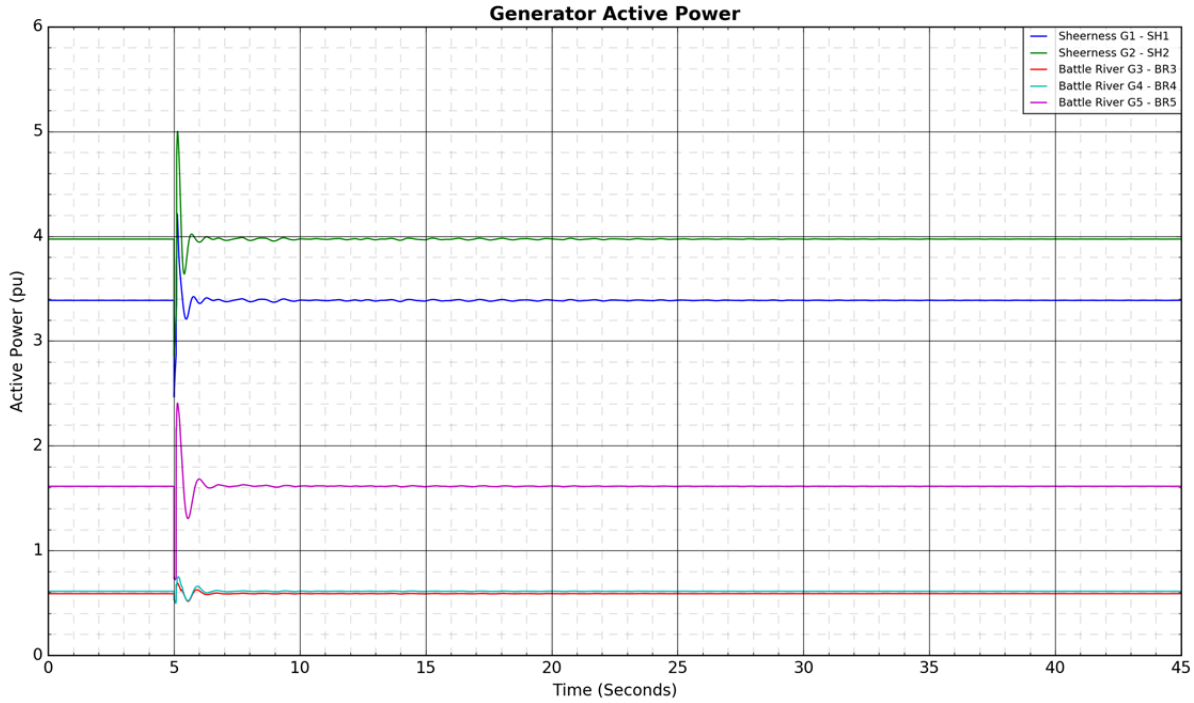
Generator Active Power
Active Power (pu)
Time (Seconds)
Sheerness G1 - SH1
Sheerness G2 - SH2
Battle River G3 - BR3
Battle River G4 - BR4
Battle River G5 - BR5

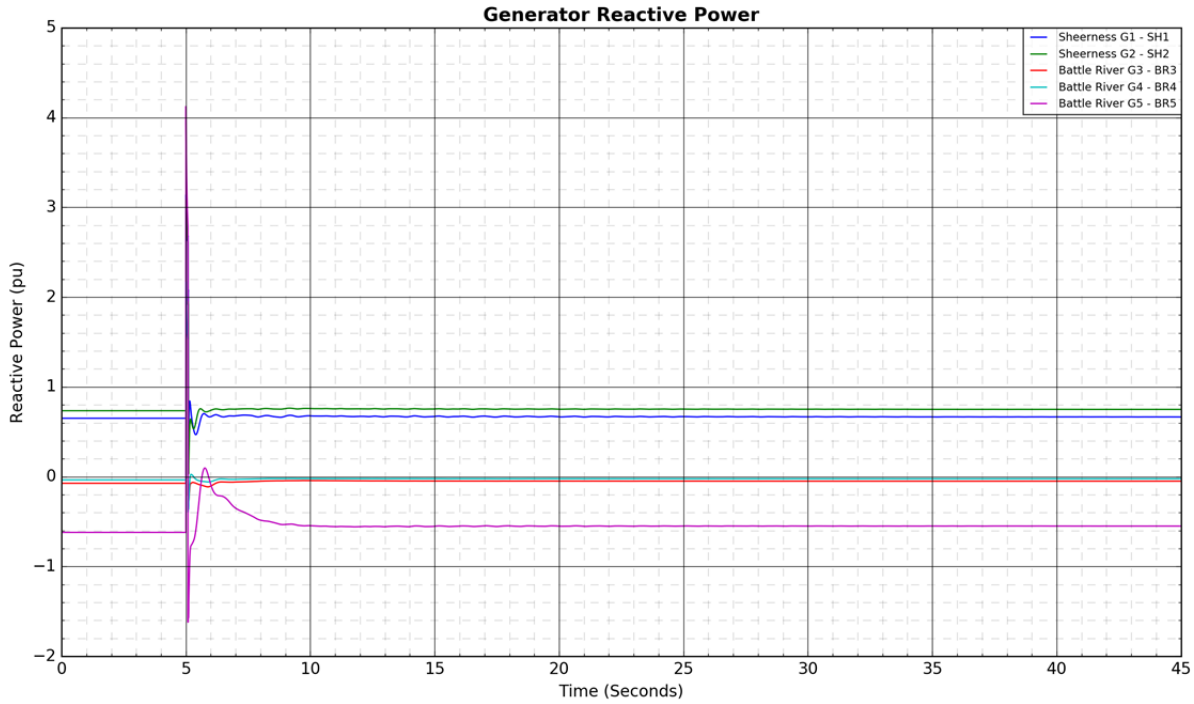
Generator Reactive Power
Sheerness G1 - SH1
Sheerness G2 - SH2
Battle River G3 - BR3
Battle River G4 - BR4
Battle River G5 - BR5
Reactive Power (pu)
Time (Seconds)

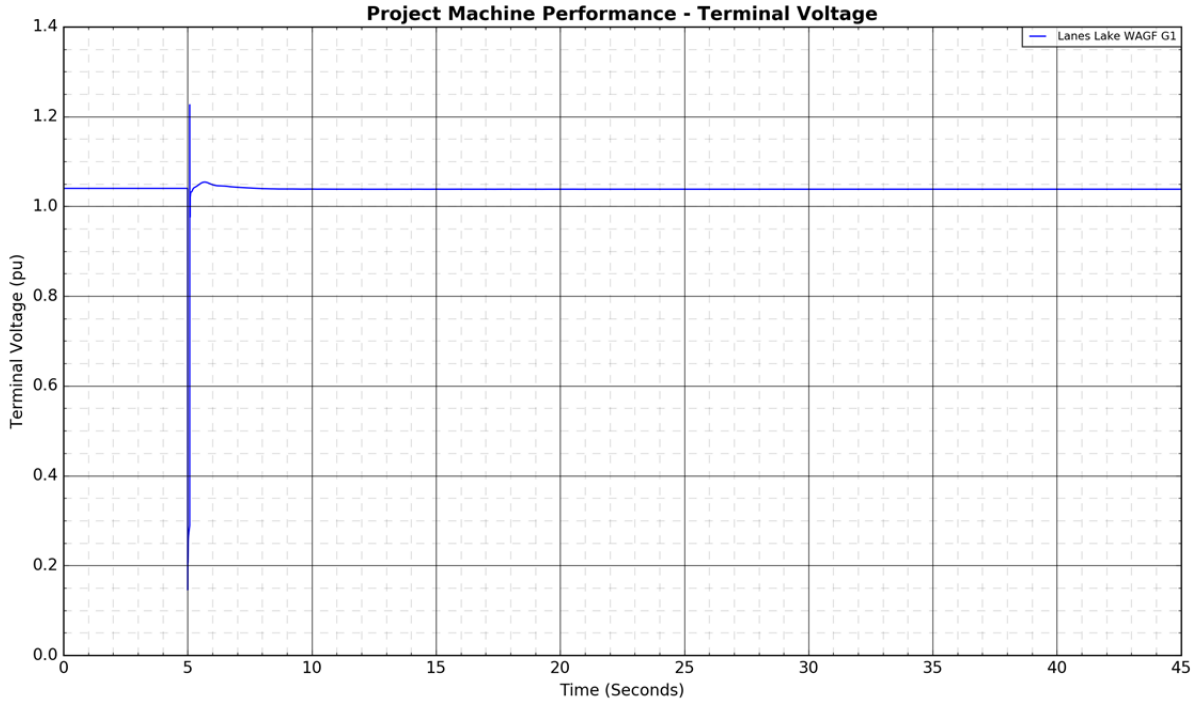
Project Machine Performance - Terminal Voltage
Lanes Lake WAGF G1
Terminal Voltage (pu)
Time (Seconds)


Project Machine Performance - Active Power
Lanes Lake WAGF G1
Active Power (pu)
Time (Seconds)
0.0
0.2
0.4
0.6
0.8
1.0
1.2
1.4
1.6
1.8
0
5
10
15
20
25
30
35
40
45

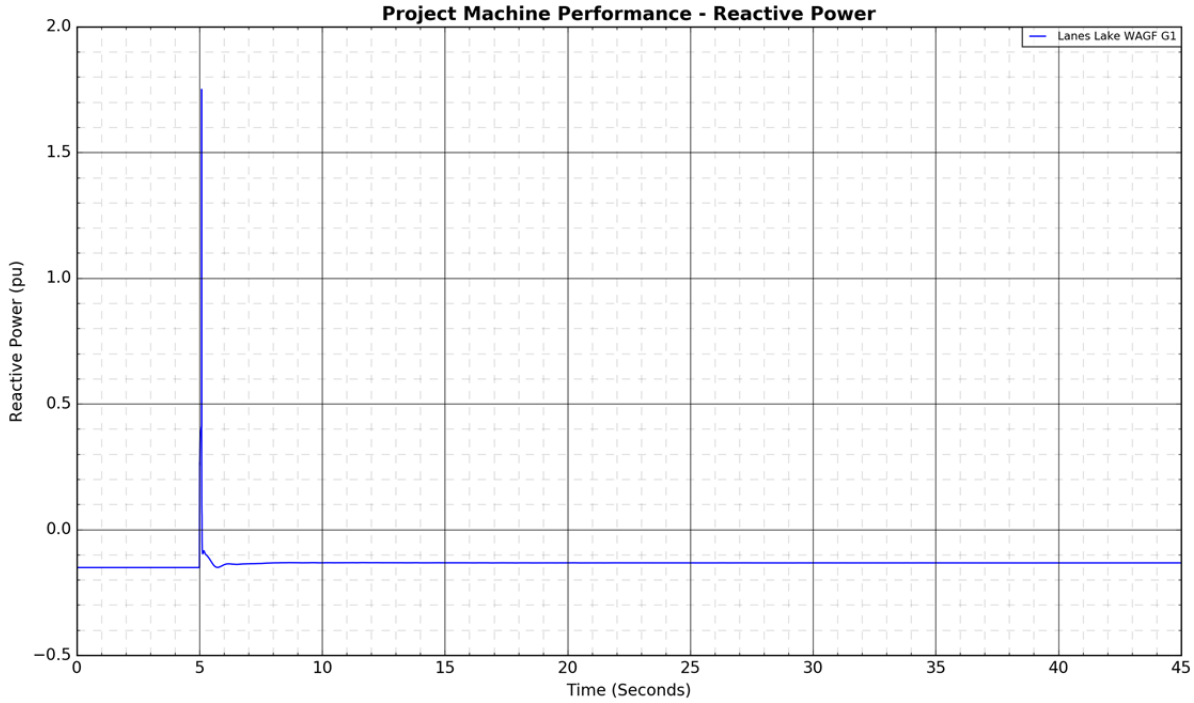
Project Machine Performance - Reactive Power
Lanes Lake WAGF G1
Reactive Power (pu)
Time (Seconds)
−0.5
0.0
0.5
1.0
1.5
2.0
0
5
10
15
20
25
30
35
40
45

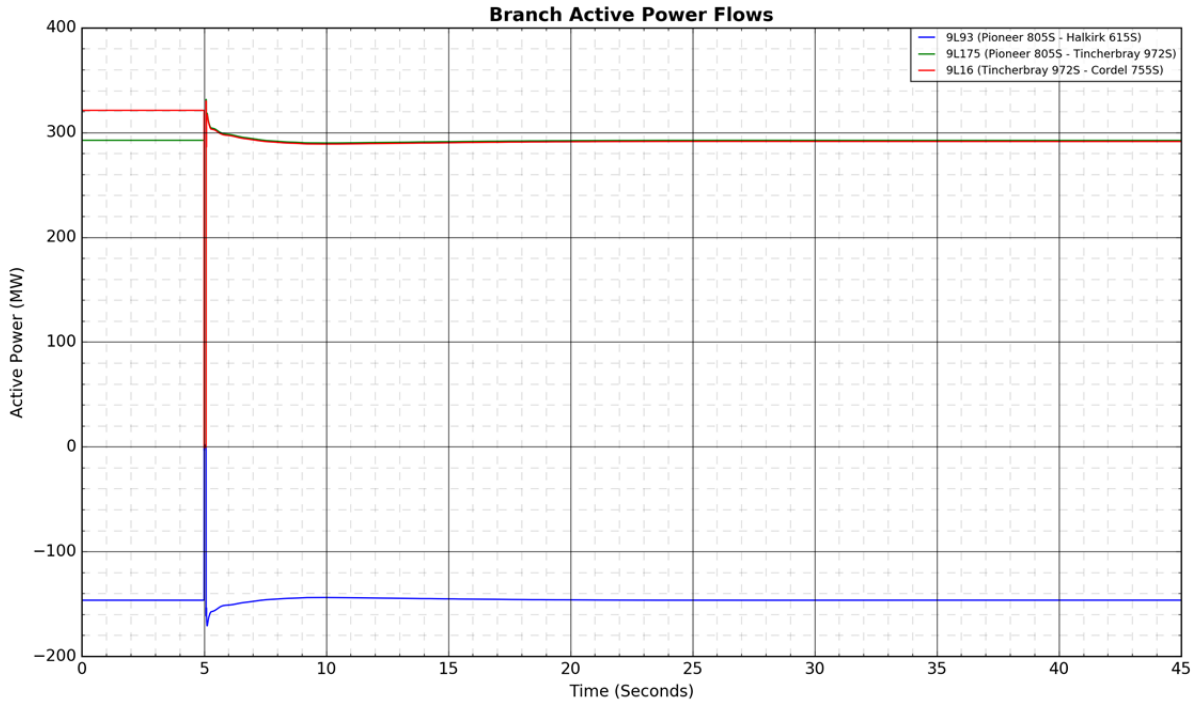
Branch Active Power Flows
9L93 (Pioneer 805S - Halkirk 615S)
9L175 (Pioneer 805S - Tincherbray 972S)
9L16 (Tincherbray 972S - Cordel 755S)
Active Power (MW)
Time (Seconds)

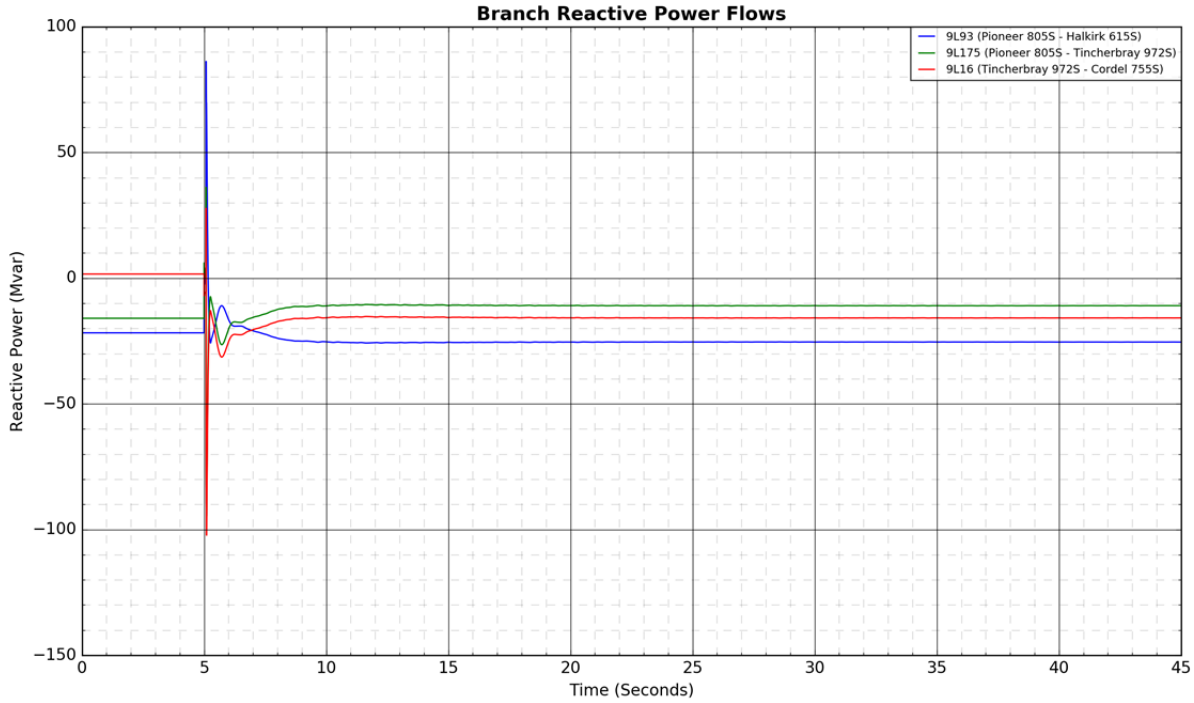
Branch Reactive Power Flows
9L93 (Pioneer 805S - Halkirk 615S)
9L175 (Pioneer 805S - Tincherbray 972S)
9L16 (Tincherbray 972S - Cordel 755S)
Reactive Power (Mvar)
Time (Seconds)

Figure A4-53: 9L966 (Pemukan 932S - Hansman Lake 650S): 3-phase fault at Pemukan 932S

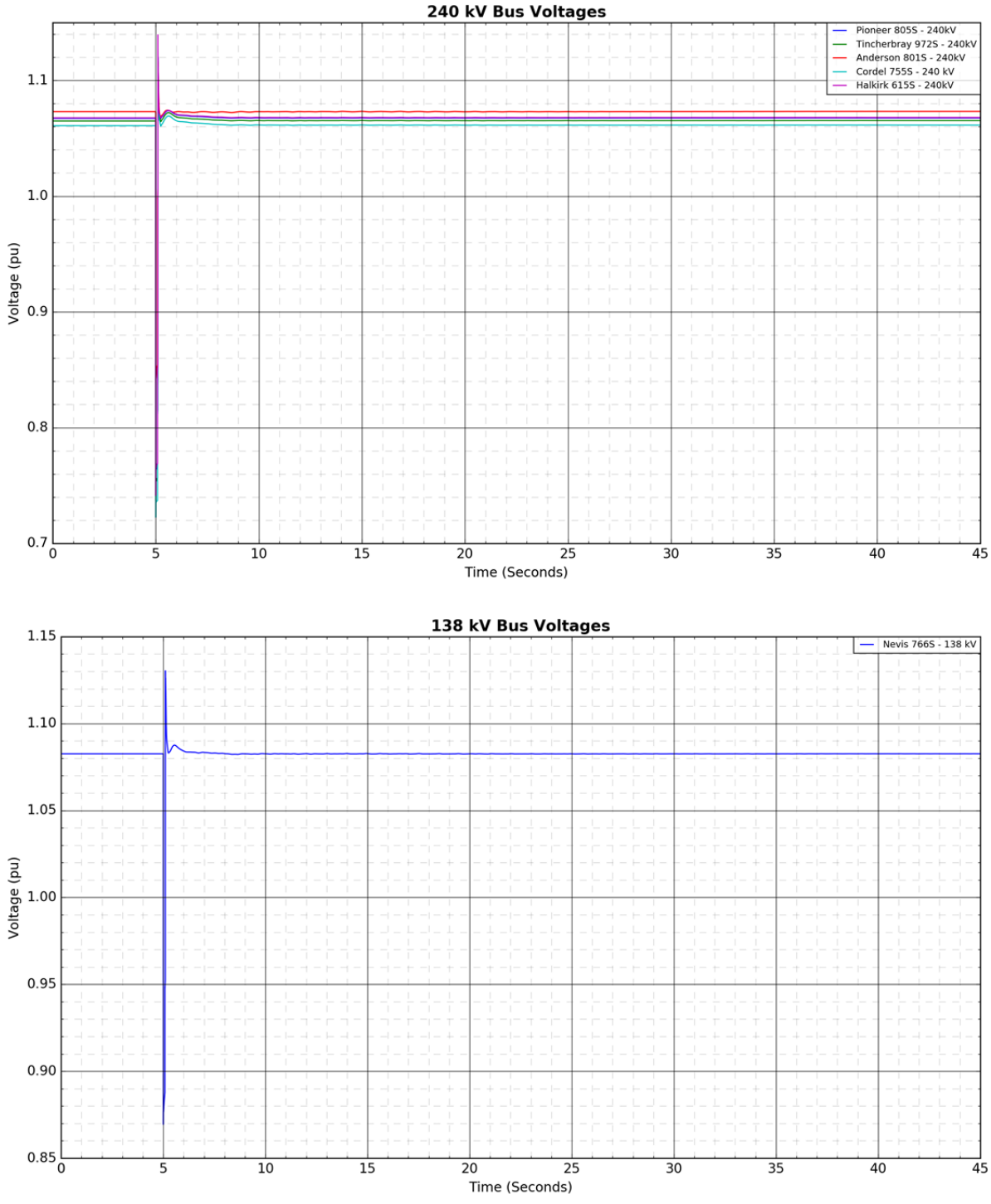

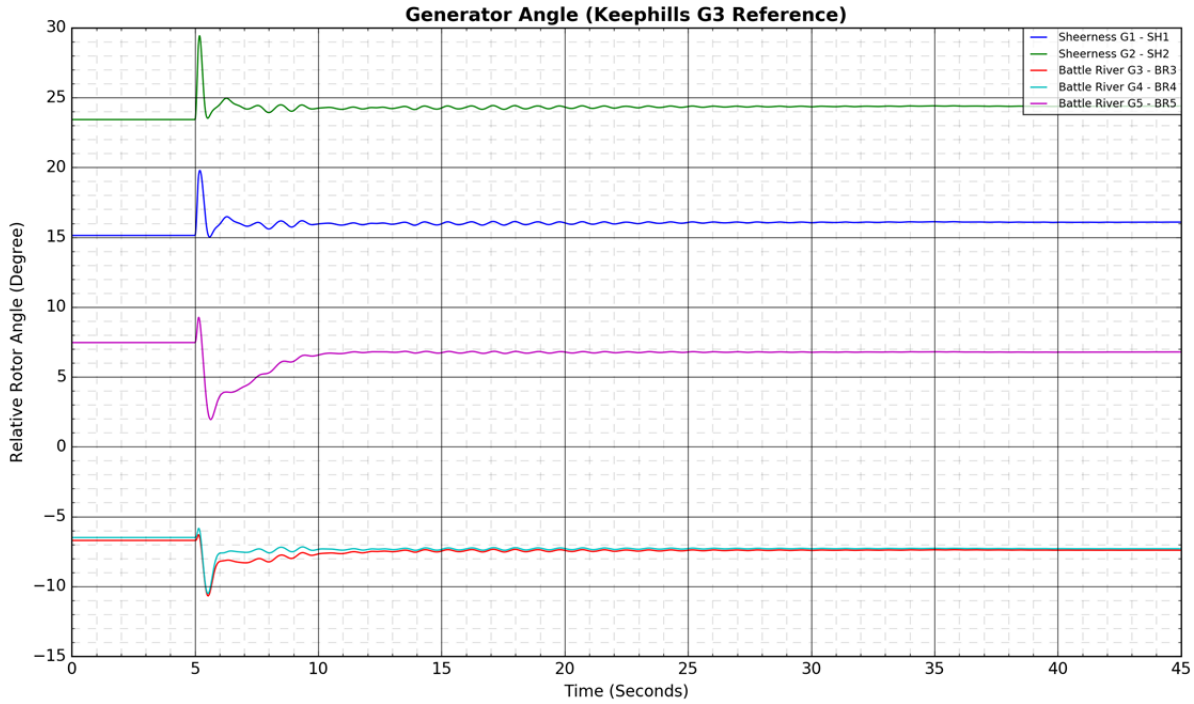
Generator Angle (Keephills G3 Reference)
Relative Rotor Angle (Degree)
Time (Seconds)
Sheerness G1 - SH1
Sheerness G2 - SH2
Battle River G3 - BR3
Battle River G4 - BR4
Battle River G5 - BR5

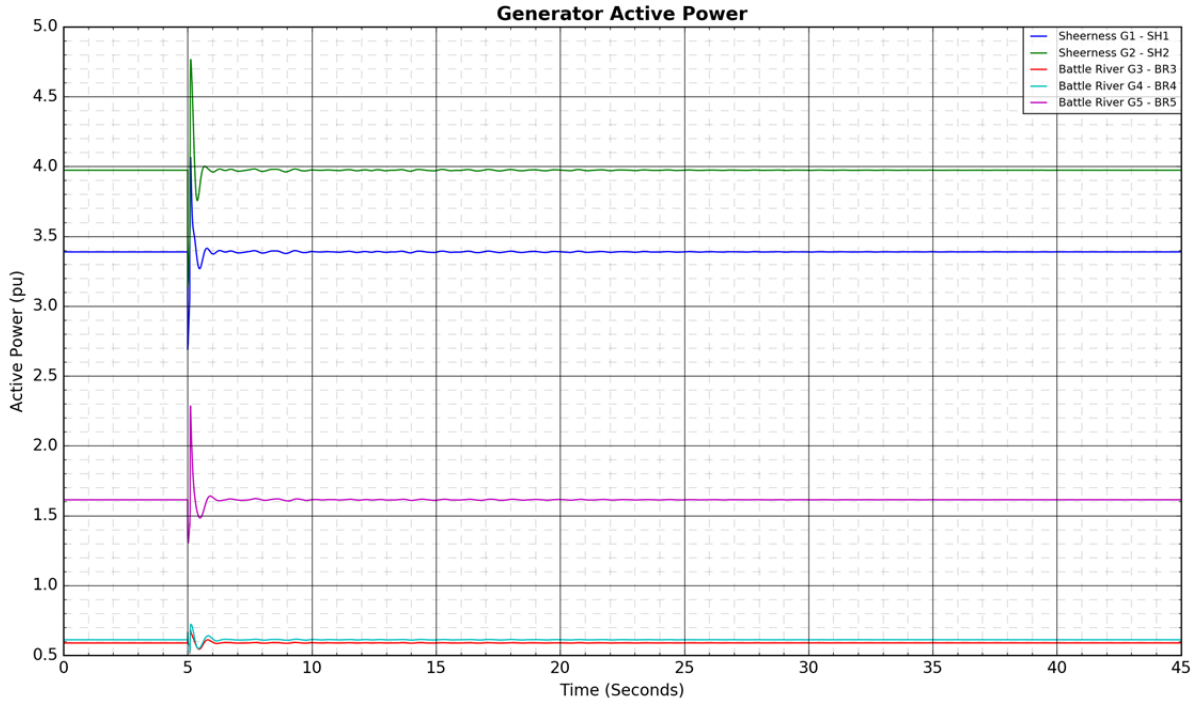
Generator Active Power
Active Power (pu)
Time (Seconds)
Sheerness G1 - SH1
Sheerness G2 - SH2
Battle River G3 - BR3
Battle River G4 - BR4
Battle River G5 - BR5

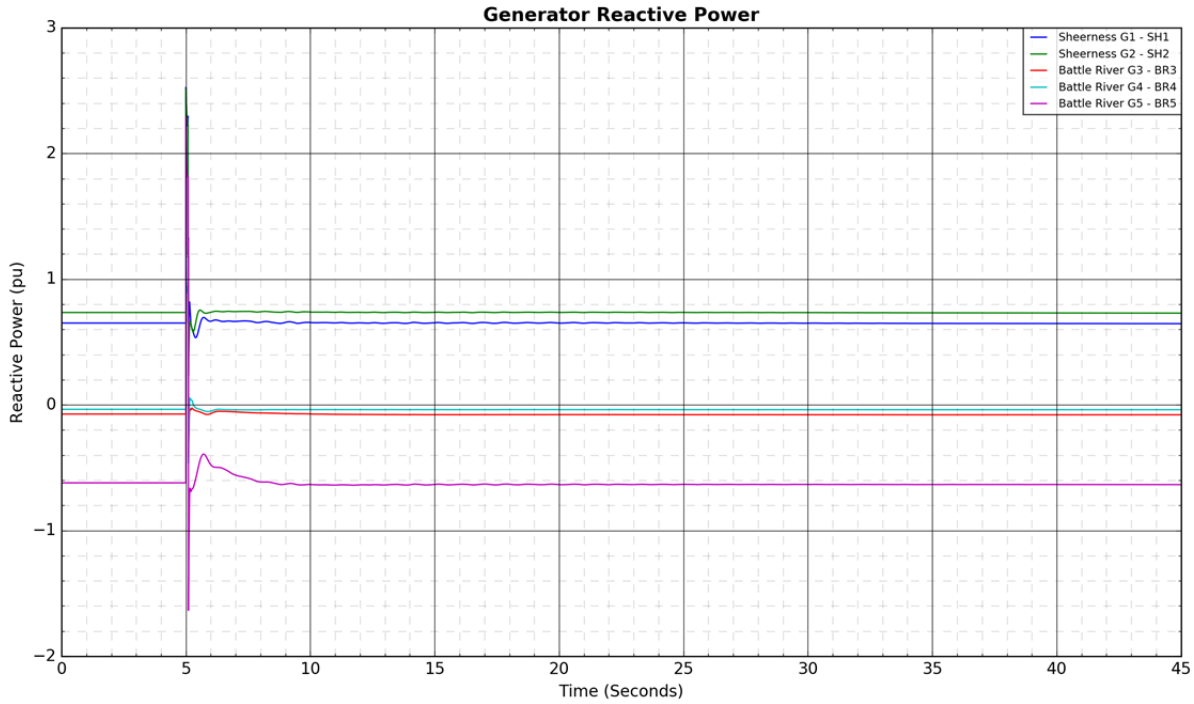
Generator Reactive Power
Sheerness G1 - SH1
Sheerness G2 - SH2
Battle River G3 - BR3
Battle River G4 - BR4
Battle River G5 - BR5
Reactive Power (pu)
Time (Seconds)
3
2
1
0
−1
−2
0
5
10
15
20
25
30
35
40
45

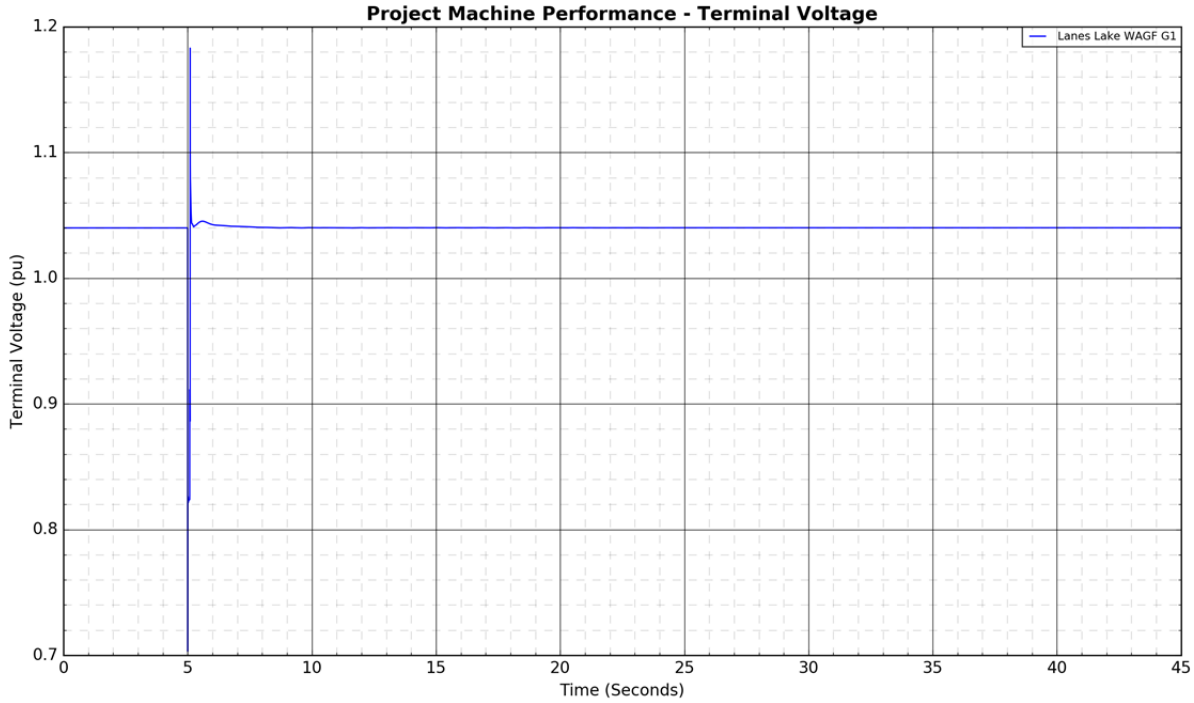
Project Machine Performance - Terminal Voltage
Lanes Lake WAGF G1
Terminal Voltage (pu)
Time (Seconds)
1.2
1.1
1.0
0.9
0.8
0.7
0
5
10
15
20
25
30
35
40
45


Project Machine Performance - Active Power
Lanes Lake WAGF G1
Active Power (pu)
Time (Seconds)
2.2
2.0
1.8
1.6
1.4
1.2
1.0
0
5
10
15
20
25
30
35
40
45


Project Machine Performance - Reactive Power
Lanes Lake WAGF G1
Reactive Power (pu)
Time (Seconds)
0.5
0.4
0.3
0.2
0.1
0.0
−0.1
−0.2
−0.3
0
5
10
15
20
25
30
35
40
45

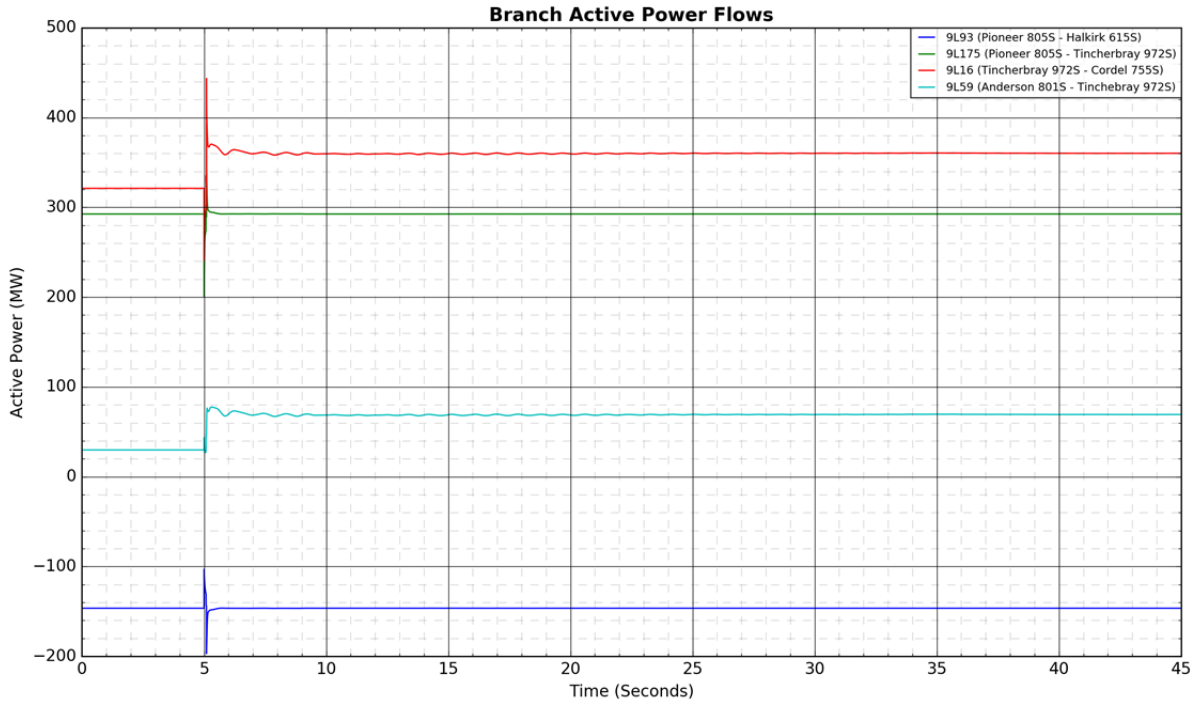
Branch Active Power Flows
9L93 (Pioneer 805S - Halkirk 615S)
9L175 (Pioneer 805S - Tincherbray 972S)
9L16 (Tincherbray 972S - Cordel 755S)
9L59 (Anderson 801S - Tinchebray 972S)
Active Power (MW)
Time (Seconds)

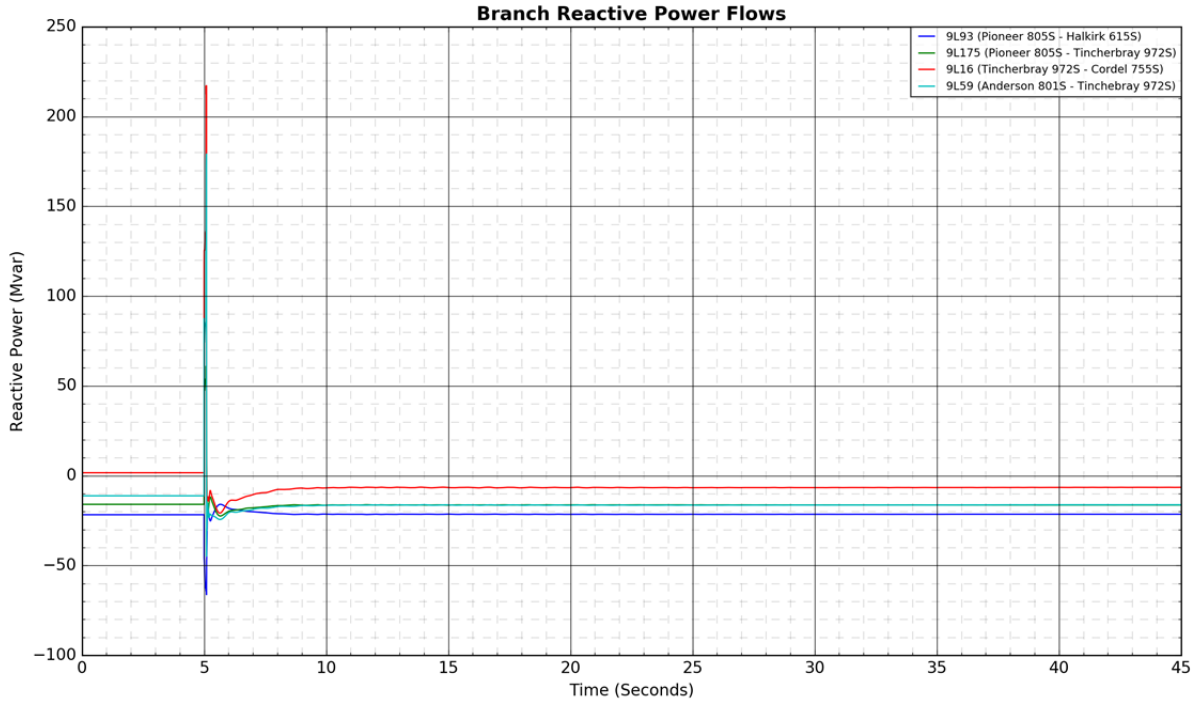
Branch Reactive Power Flows
9L93 (Pioneer 805S - Halkirk 615S)
9L175 (Pioneer 805S - Tincherbray 972S)
9L16 (Tincherbray 972S - Cordel 755S)
9L59 (Anderson 801S - Tinchebray 972S)
Reactive Power (Mvar)
Time (Seconds)

Figure A4-54: 9L966 (Pemukan 932S - Hansman Lake 650S): 3-phase fault at Hansman Lake 650S

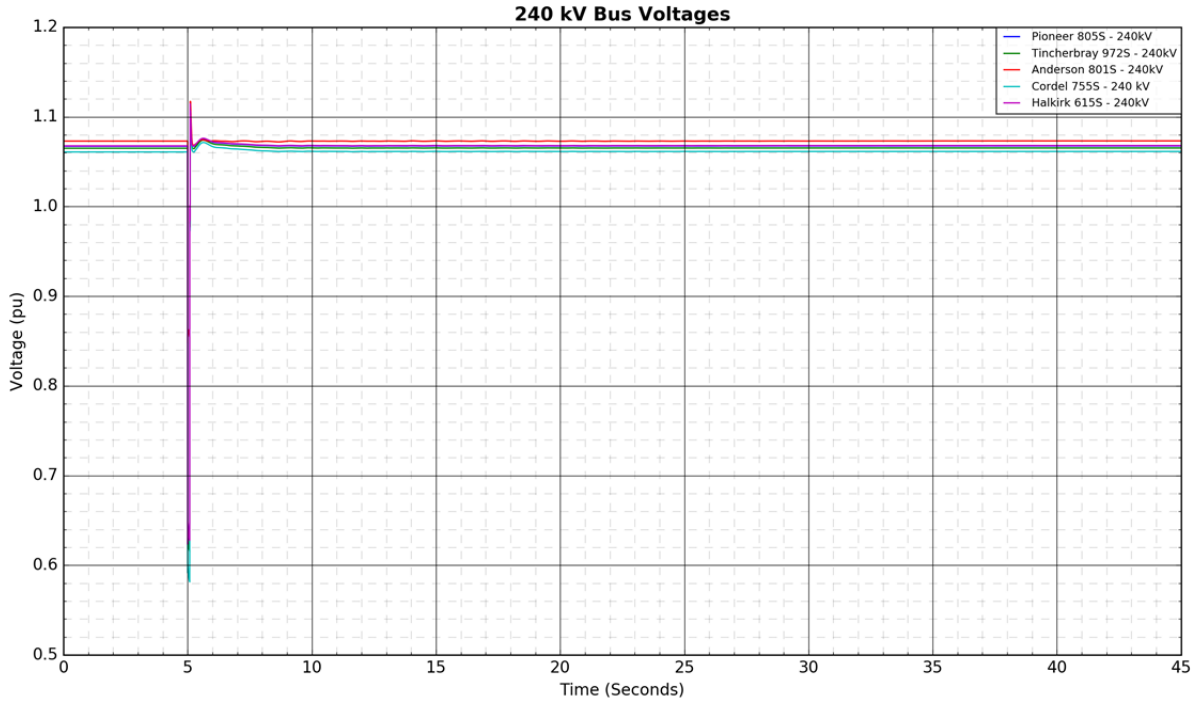

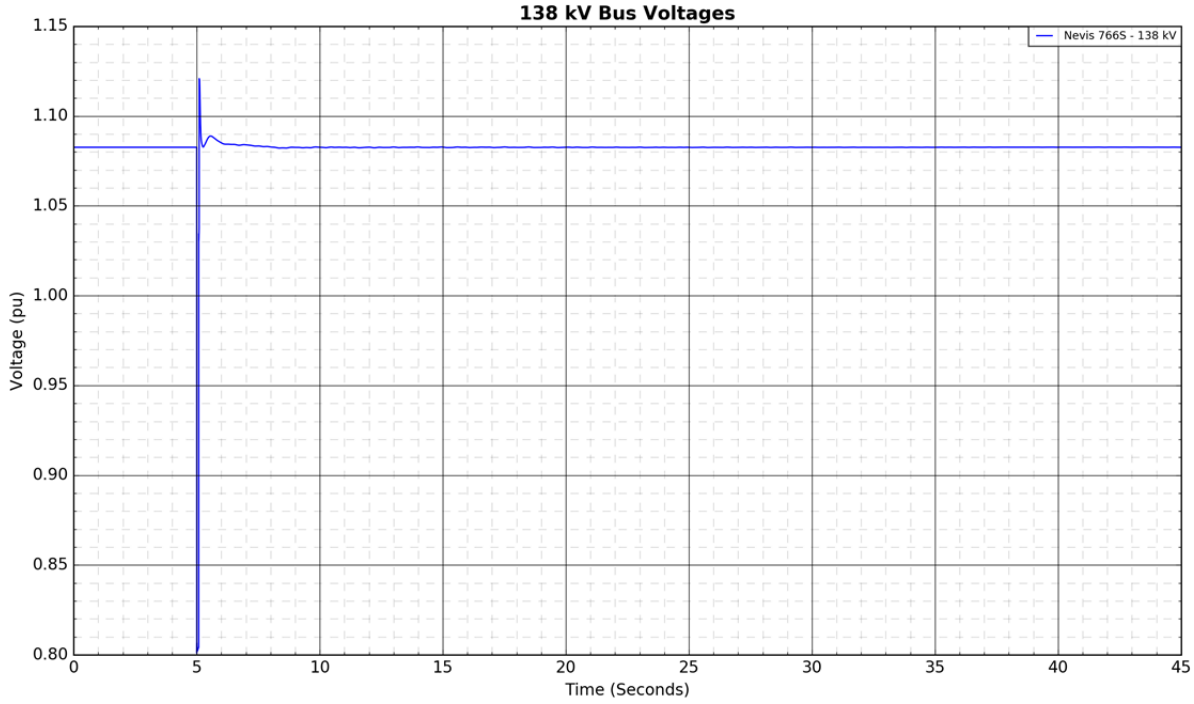

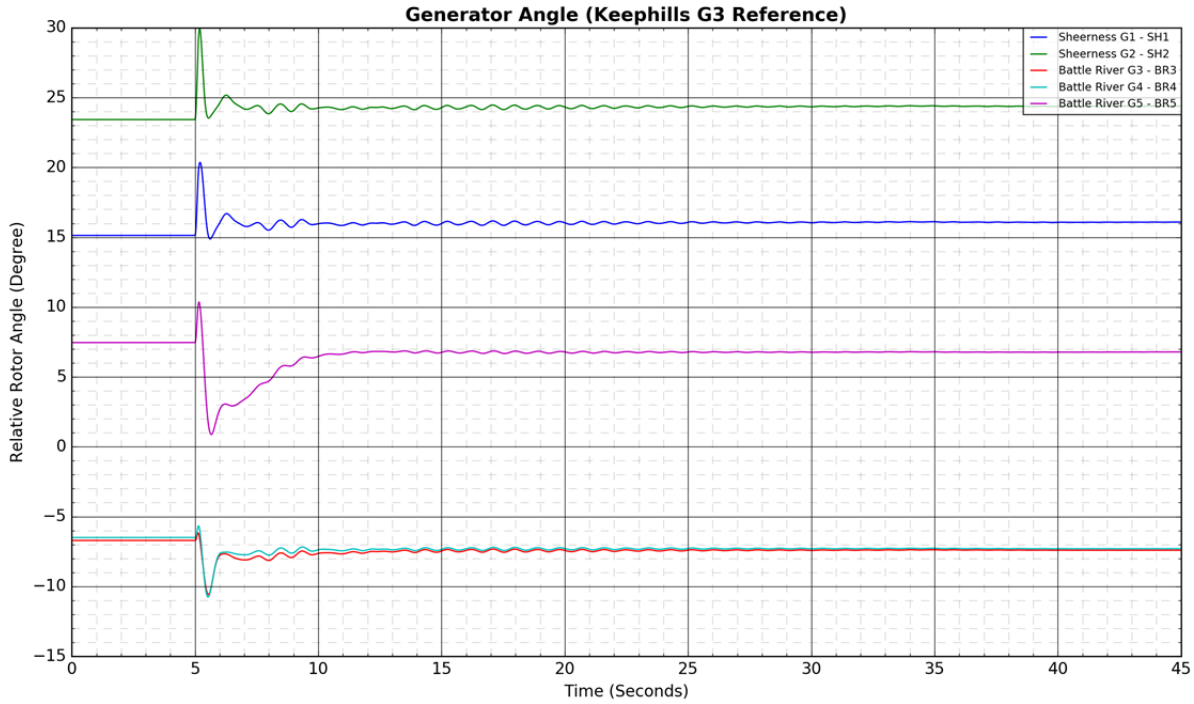
Generator Angle (Keephills G3 Reference)
Relative Rotor Angle (Degree)
Time (Seconds)
Sheerness G1 - SH1
Sheerness G2 - SH2
Battle River G3 - BR3
Battle River G4 - BR4
Battle River G5 - BR5

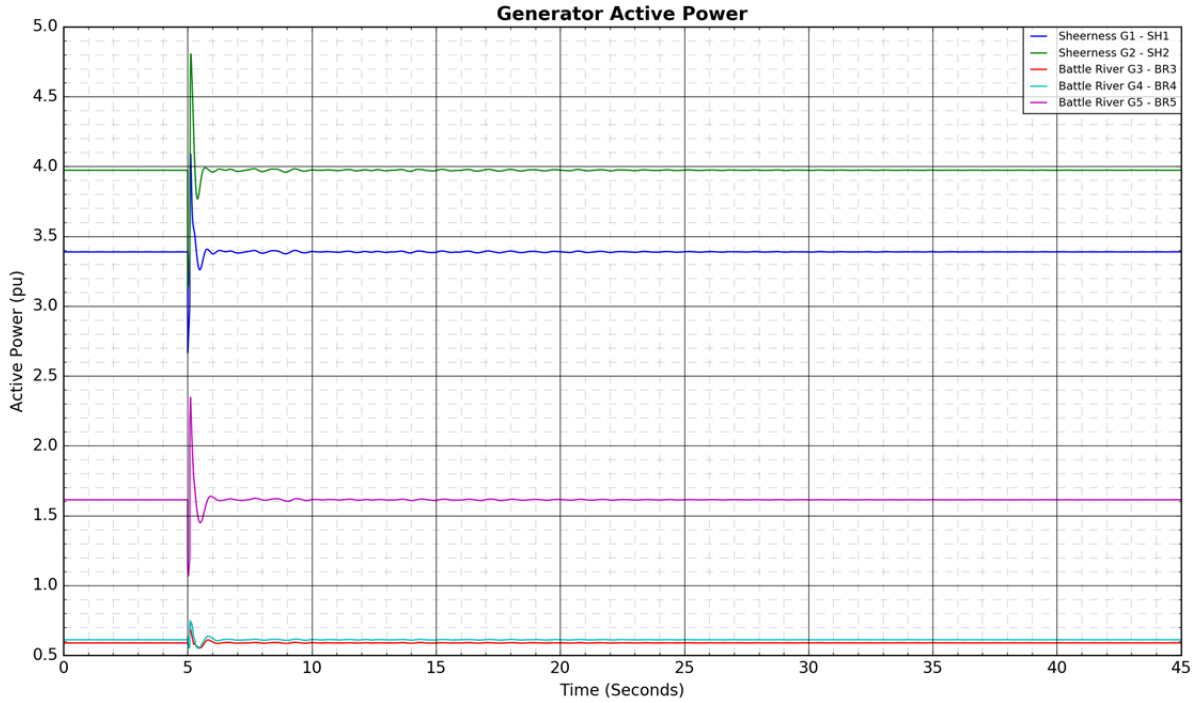
Generator Active Power
Active Power (pu)
Time (Seconds)
Sheerness G1 - SH1
Sheerness G2 - SH2
Battle River G3 - BR3
Battle River G4 - BR4
Battle River G5 - BR5

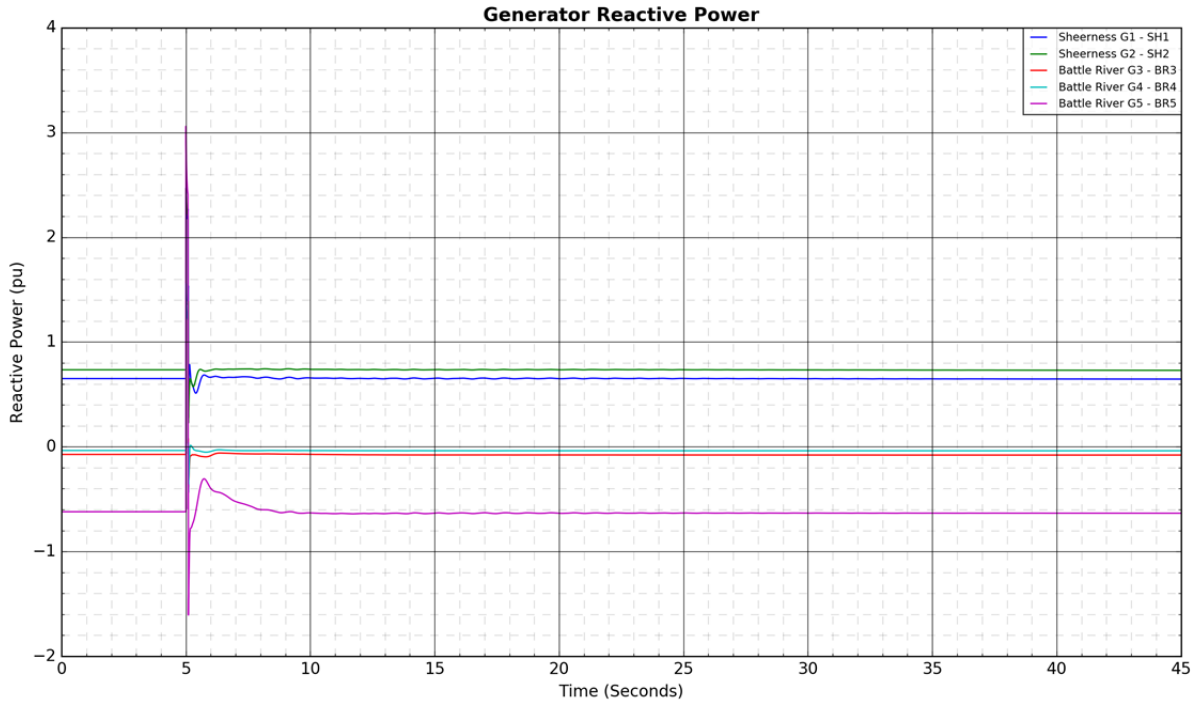
Generator Reactive Power
Sheerness G1 - SH1
Sheerness G2 - SH2
Battle River G3 - BR3
Battle River G4 - BR4
Battle River G5 - BR5
Reactive Power (pu)
Time (Seconds)

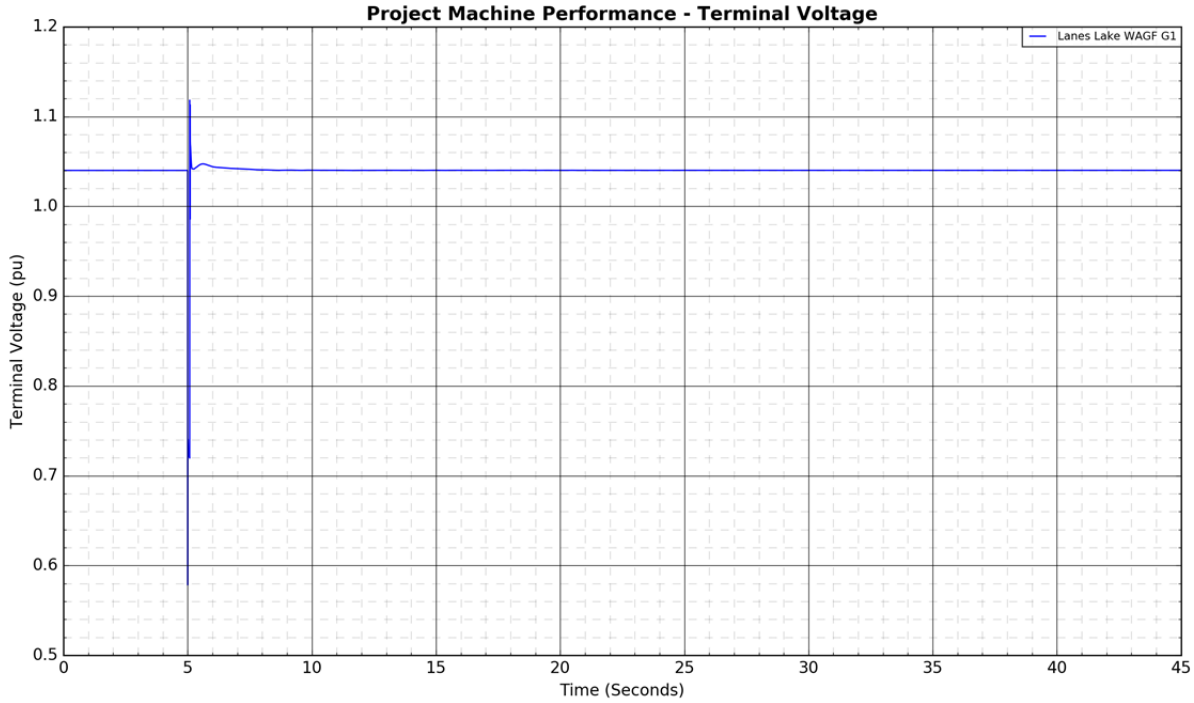
Project Machine Performance - Terminal Voltage
Lanes Lake WAGF G1
Terminal Voltage (pu)
Time (Seconds)


Project Machine Performance - Active Power
Lanes Lake WAGF G1
Active Power (pu)
Time (Seconds)
2.2
2.0
1.8
1.6
1.4
1.2
1.0
0.8
0
5
10
15
20
25
30
35
40
45

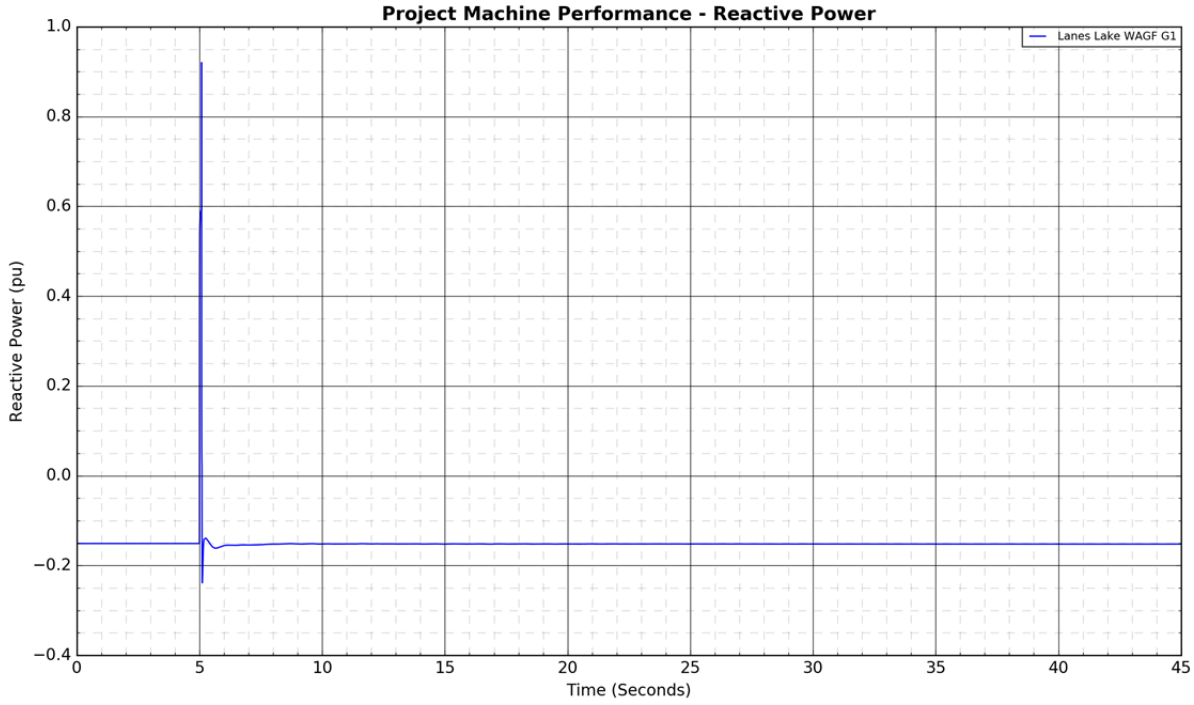
Project Machine Performance - Reactive Power
Lanes Lake WAGF G1
Reactive Power (pu)
Time (Seconds)
1.0
0.8
0.6
0.4
0.2
0.0
−0.2
−0.4
0
5
10
15
20
25
30
35
40
45

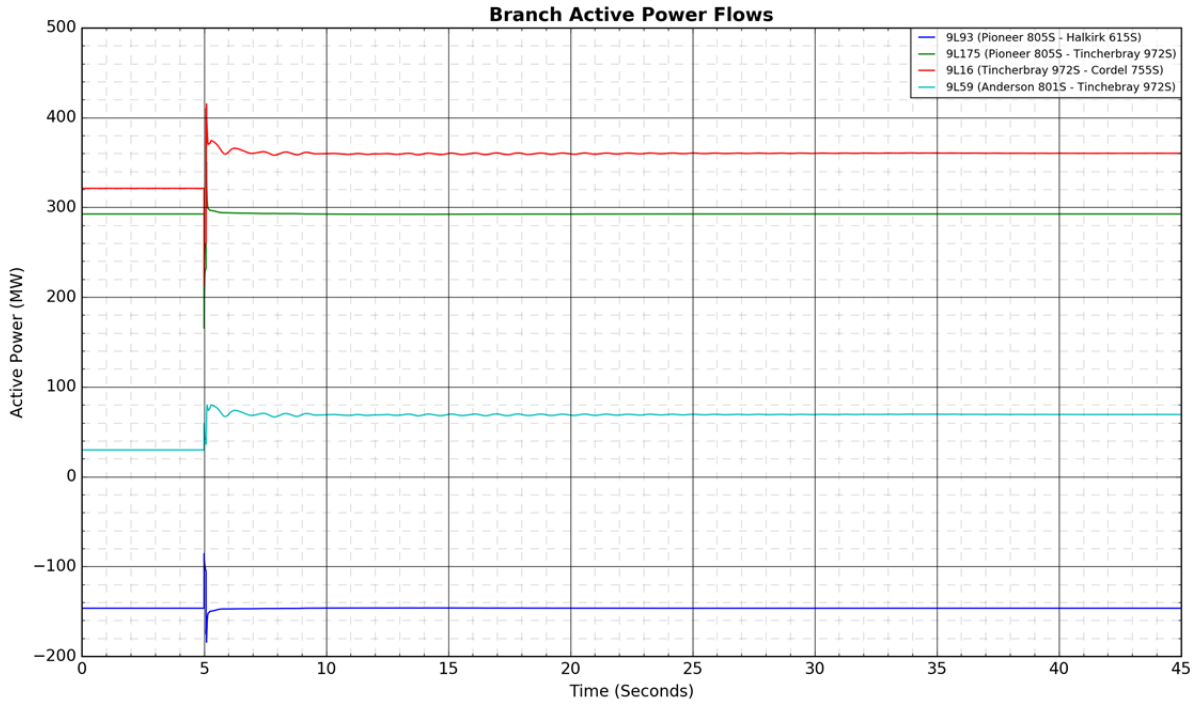
Branch Active Power Flows
9L93 (Pioneer 805S - Halkirk 615S)
9L175 (Pioneer 805S - Tincherbray 972S)
9L16 (Tincherbray 972S - Cordel 755S)
9L59 (Anderson 801S - Tinchebray 972S)
Active Power (MW)
Time (Seconds)

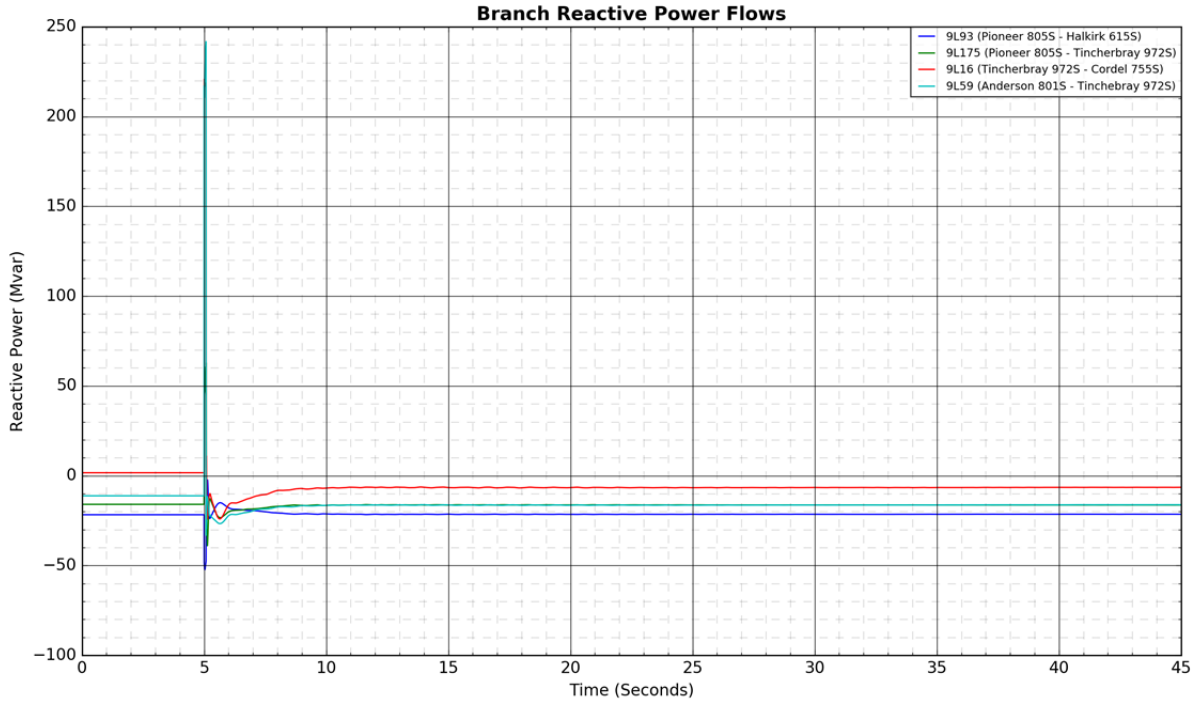
Branch Reactive Power Flows
9L93 (Pioneer 805S - Halkirk 615S)
9L175 (Pioneer 805S - Tincherbray 972S)
9L16 (Tincherbray 972S - Cordel 755S)
9L59 (Anderson 801S - Tinchebray 972S)
Reactive Power (Mvar)
Time (Seconds)

Figure A4-55: 912L\9L912 (Nevis 766S - Red Deer 63S): 3-phase fault at Nevis 766S

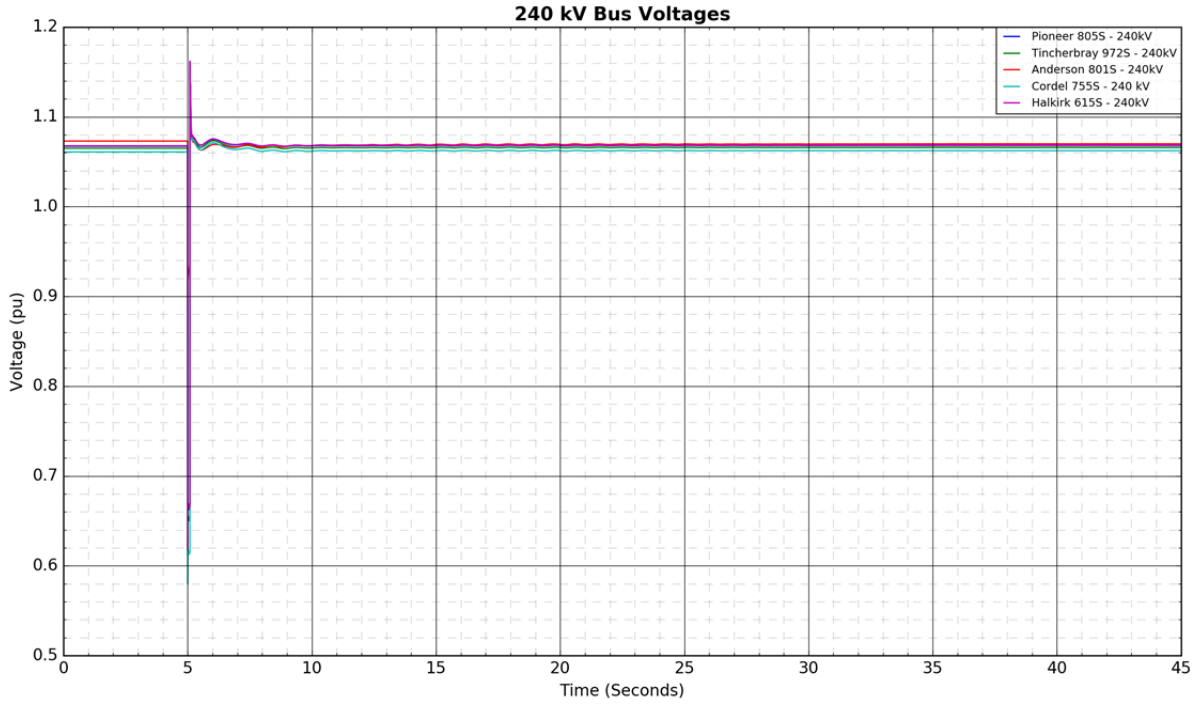

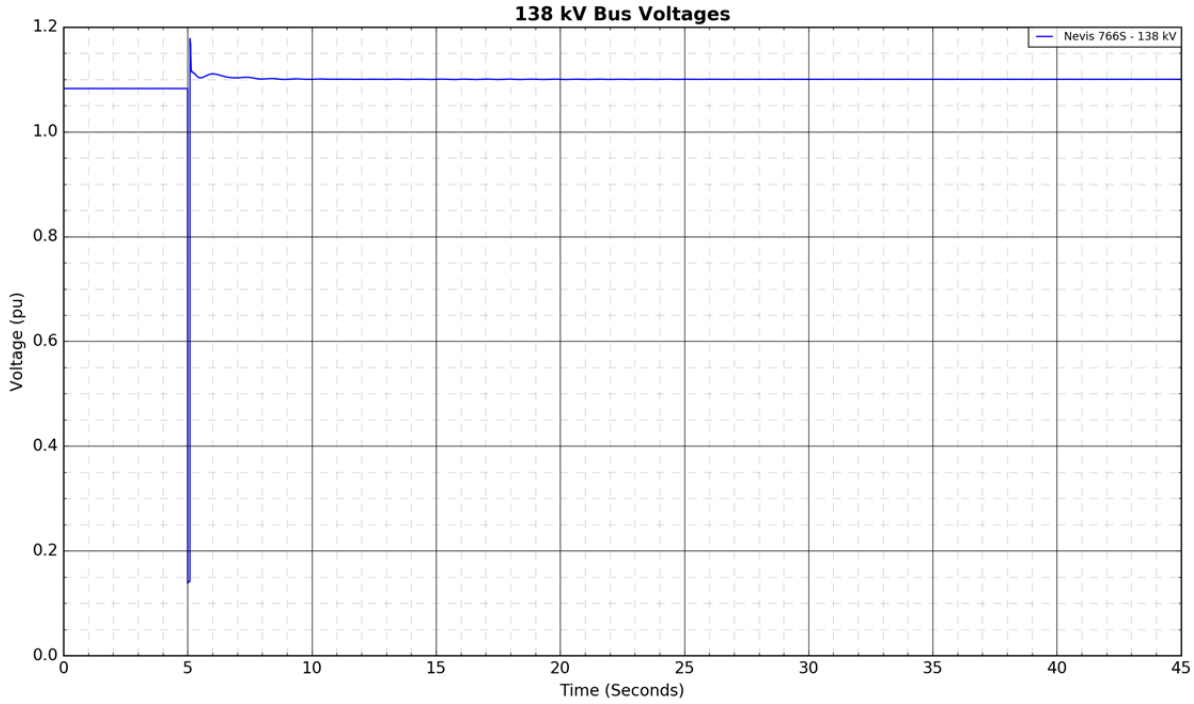

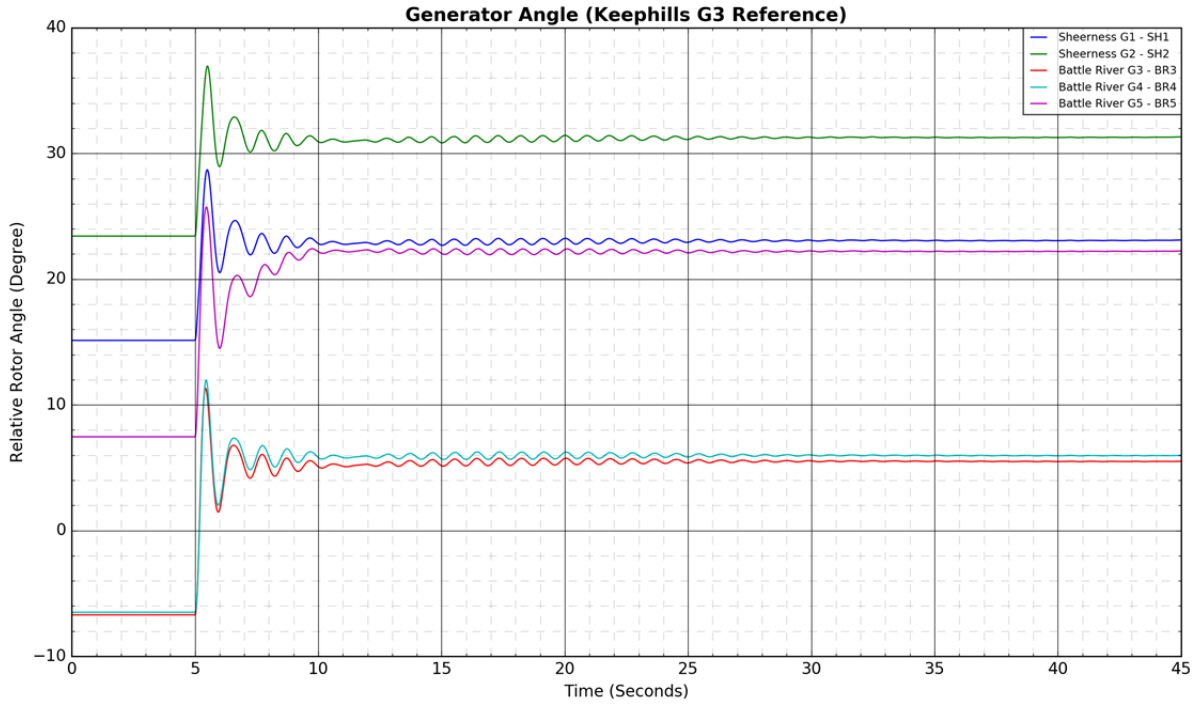
Generator Angle (Keephills G3 Reference)
Relative Rotor Angle (Degree)
Time (Seconds)
Sheerness G1 - SH1
Sheerness G2 - SH2
Battle River G3 - BR3
Battle River G4 - BR4
Battle River G5 - BR5

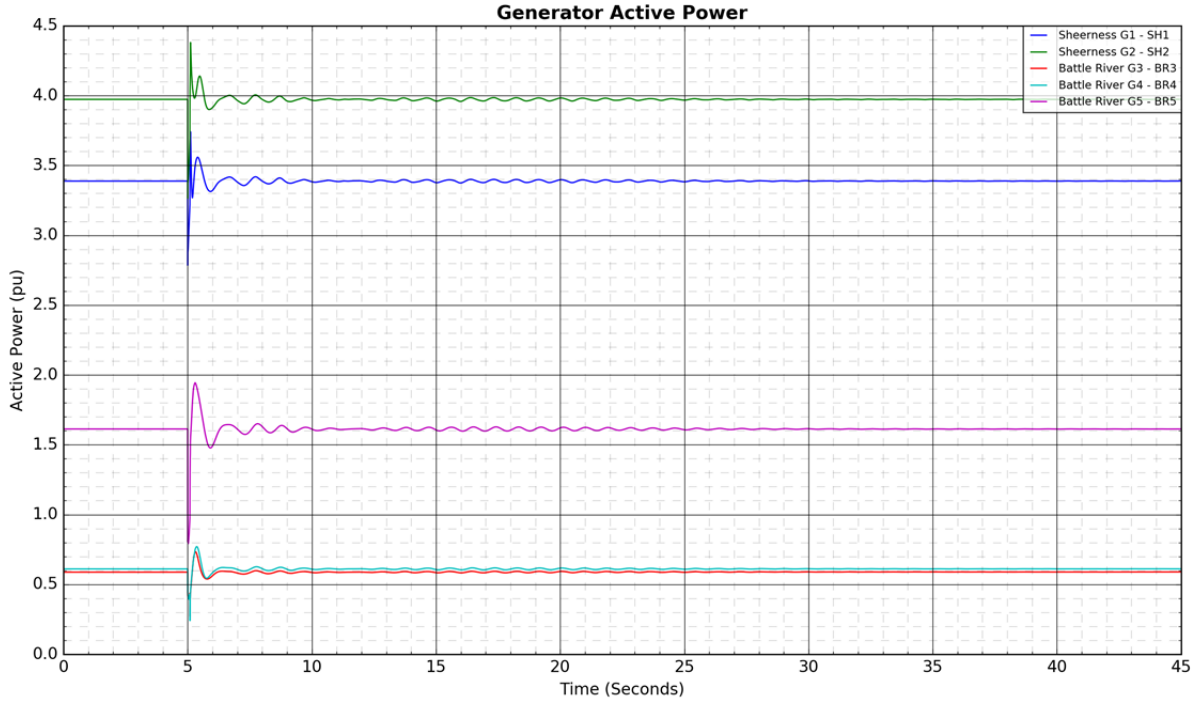
Generator Active Power
Active Power (pu)
Time (Seconds)
Sheerness G1 - SH1
Sheerness G2 - SH2
Battle River G3 - BR3
Battle River G4 - BR4
Battle River G5 - BR5

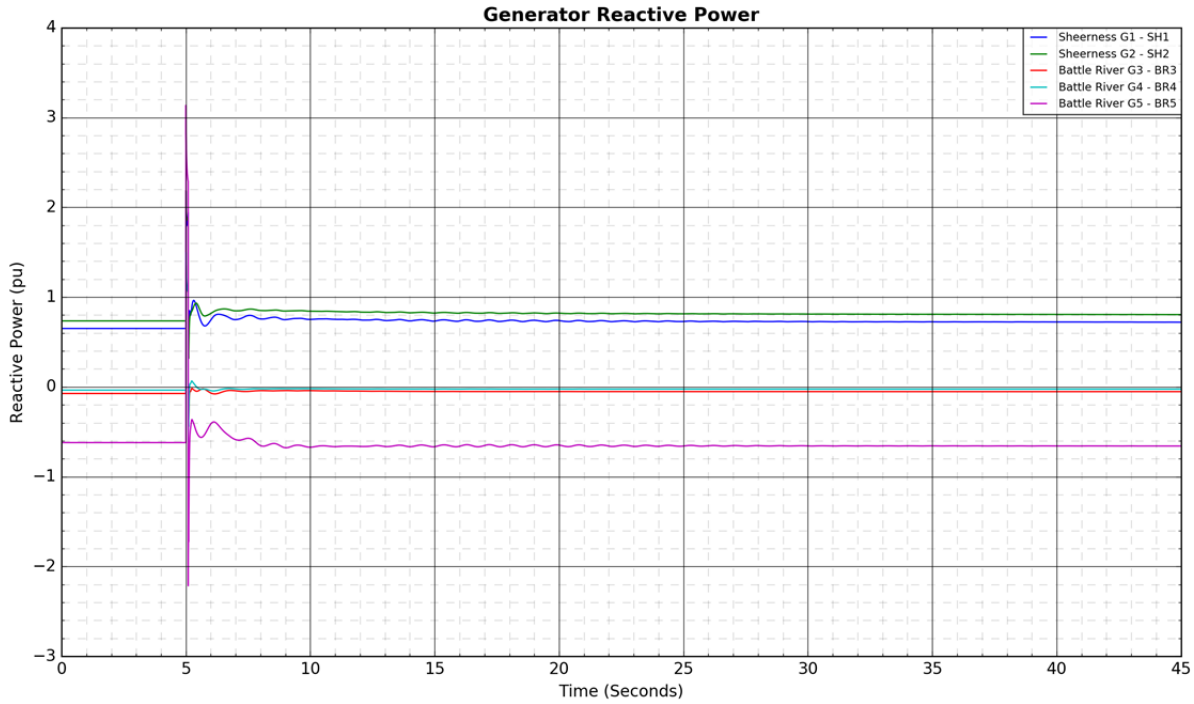
Generator Reactive Power
Sheerness G1 - SH1
Sheerness G2 - SH2
Battle River G3 - BR3
Battle River G4 - BR4
Battle River G5 - BR5
Reactive Power (pu)
Time (Seconds)

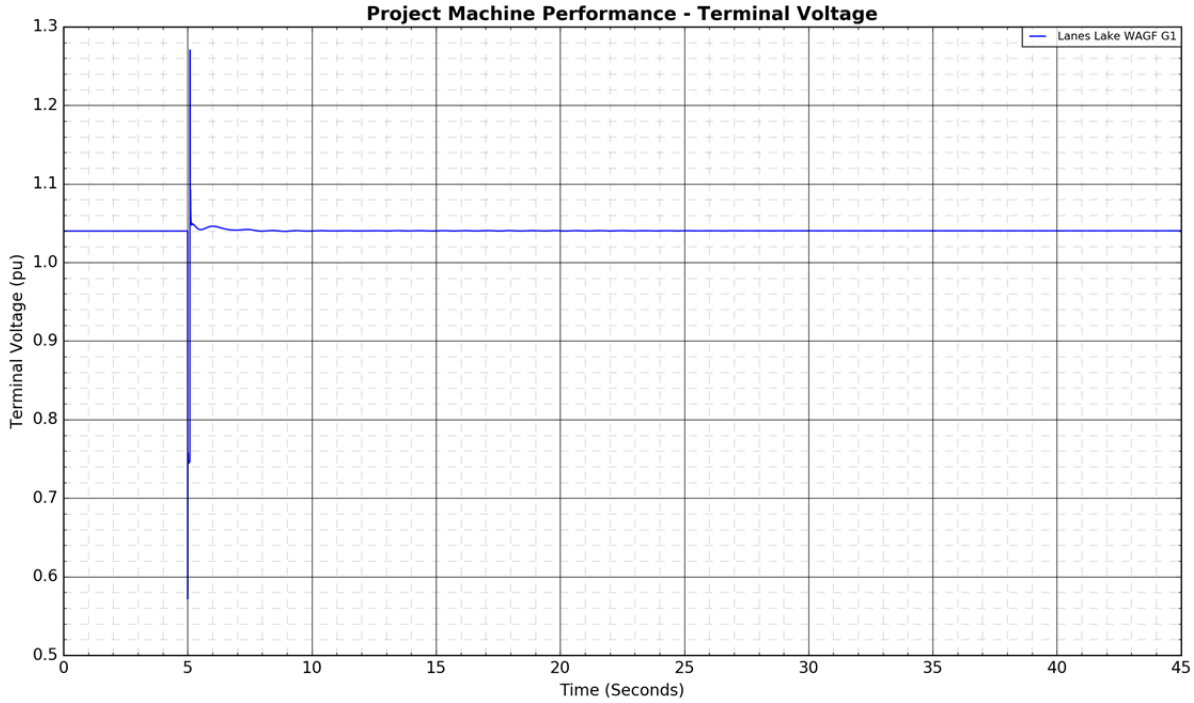
Project Machine Performance - Terminal Voltage
Lanes Lake WAGF G1
Terminal Voltage (pu)
Time (Seconds)


Project Machine Performance - Active Power
Lanes Lake WAGF G1
Active Power (pu)
Time (Seconds)
2.6
2.4
2.2
2.0
1.8
1.6
1.4
1.2
1.0
0.8
0
5
10
15
20
25
30
35
40
45

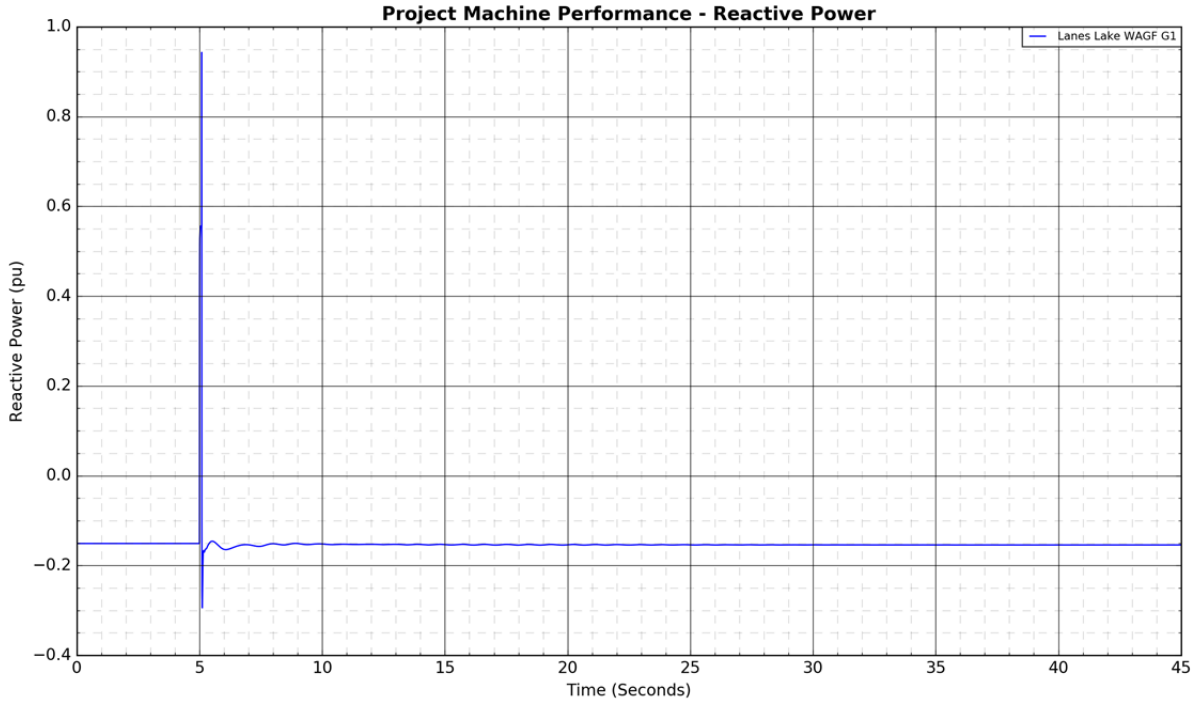
Project Machine Performance - Reactive Power
Lanes Lake WAGF G1
Reactive Power (pu)
Time (Seconds)
1.0
0.8
0.6
0.4
0.2
0.0
−0.2
−0.4
0
5
10
15
20
25
30
35
40
45


Branch Active Power Flows
9L93 (Pioneer 805S - Halkirk 615S)
9L175 (Pioneer 805S - Tincherbray 972S)
9L16 (Tincherbray 972S - Cordel 755S)
9L59 (Anderson 801S - Tinchebray 972S)
Active Power (MW)
Time (Seconds)

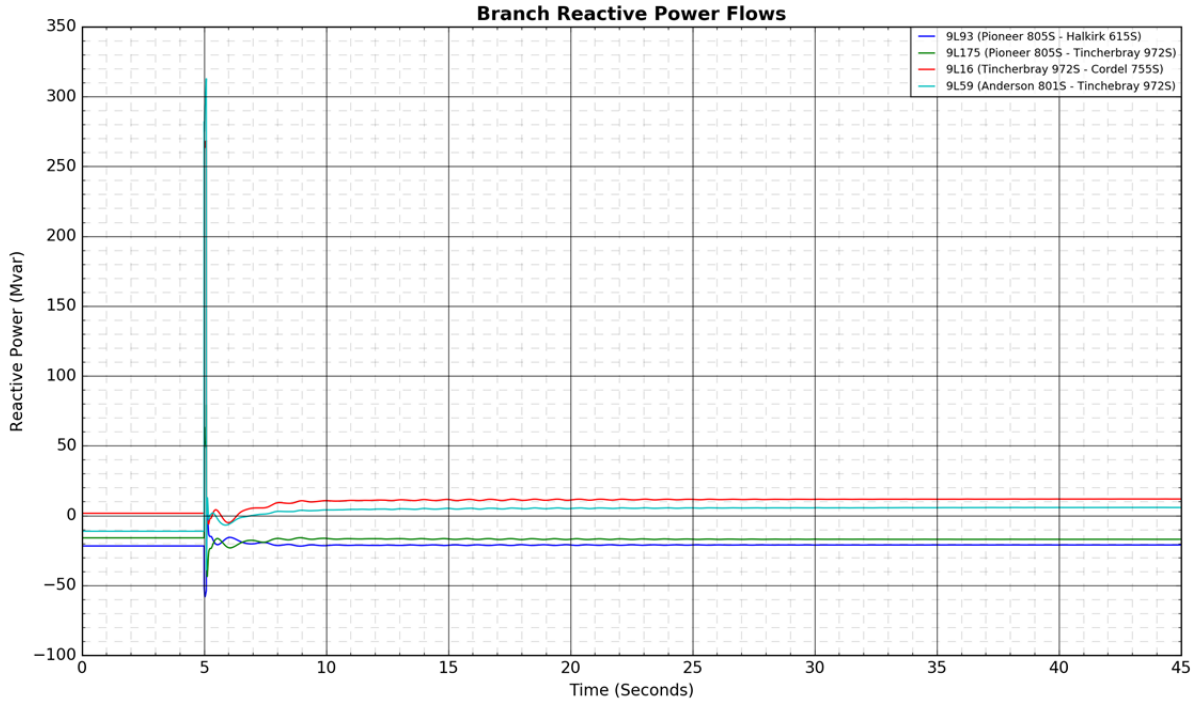
Branch Reactive Power Flows
9L93 (Pioneer 805S - Halkirk 615S)
9L175 (Pioneer 805S - Tincherbray 972S)
9L16 (Tincherbray 972S - Cordel 755S)
9L59 (Anderson 801S - Tinchebray 972S)
Reactive Power (Mvar)
Time (Seconds)

Figure A4-56: 912L\9L912 (Nevis 766S - Red Deer 63S): 3-phase fault at Red Deer 63S

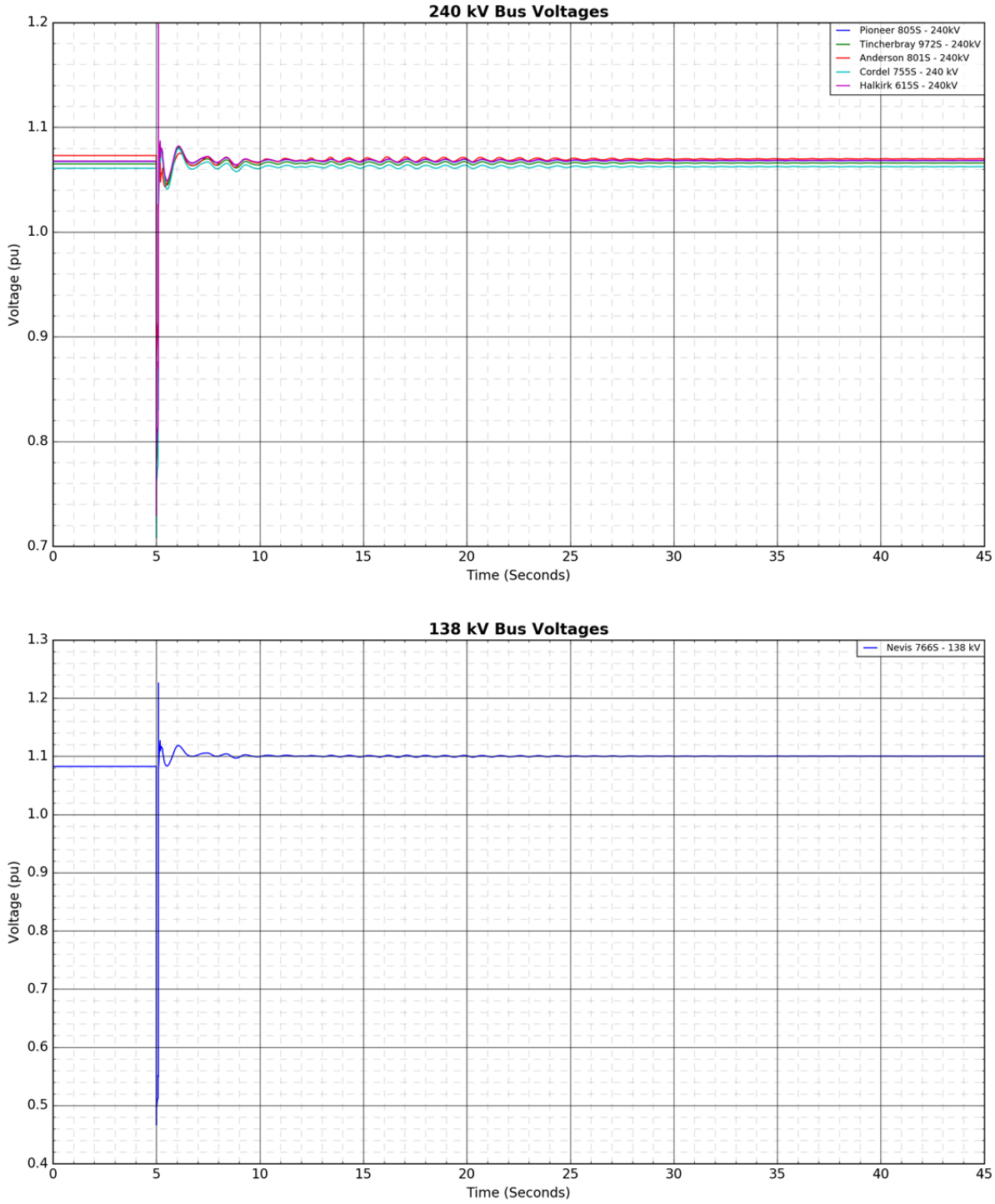

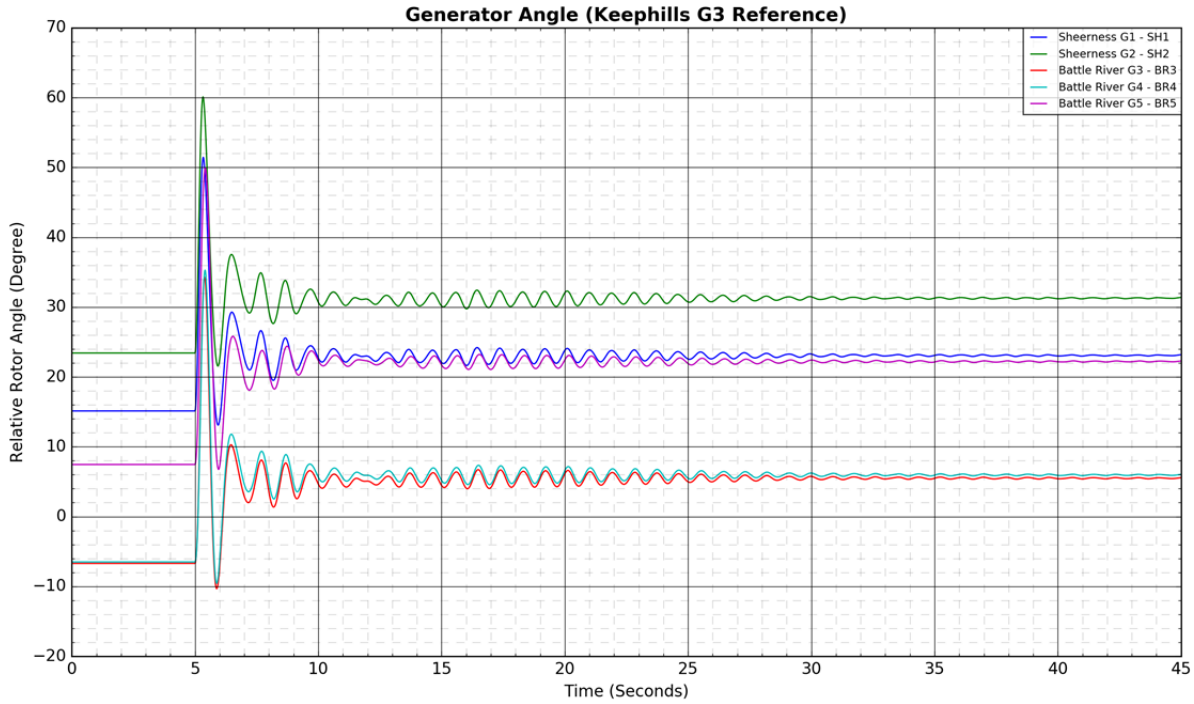
Generator Angle (Keephills G3 Reference)
Relative Rotor Angle (Degree)
Time (Seconds)
Sheerness G1 - SH1
Sheerness G2 - SH2
Battle River G3 - BR3
Battle River G4 - BR4
Battle River G5 - BR5

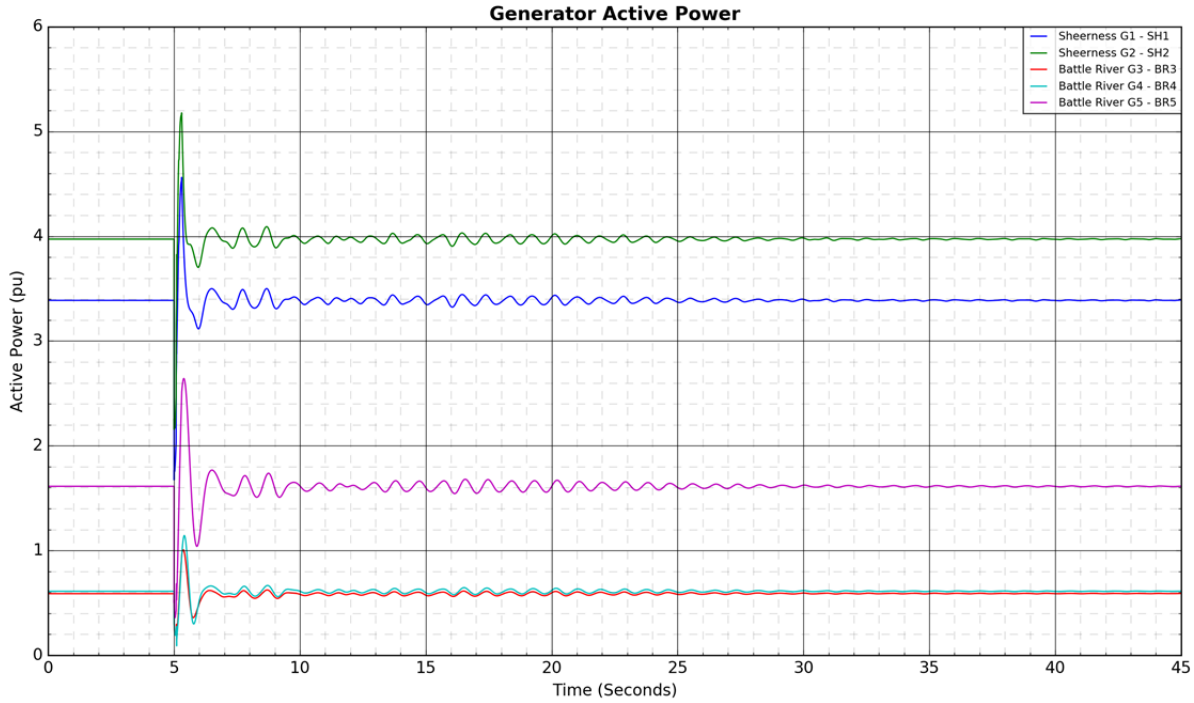
Generator Active Power
Active Power (pu)
Time (Seconds)
Sheerness G1 - SH1
Sheerness G2 - SH2
Battle River G3 - BR3
Battle River G4 - BR4
Battle River G5 - BR5

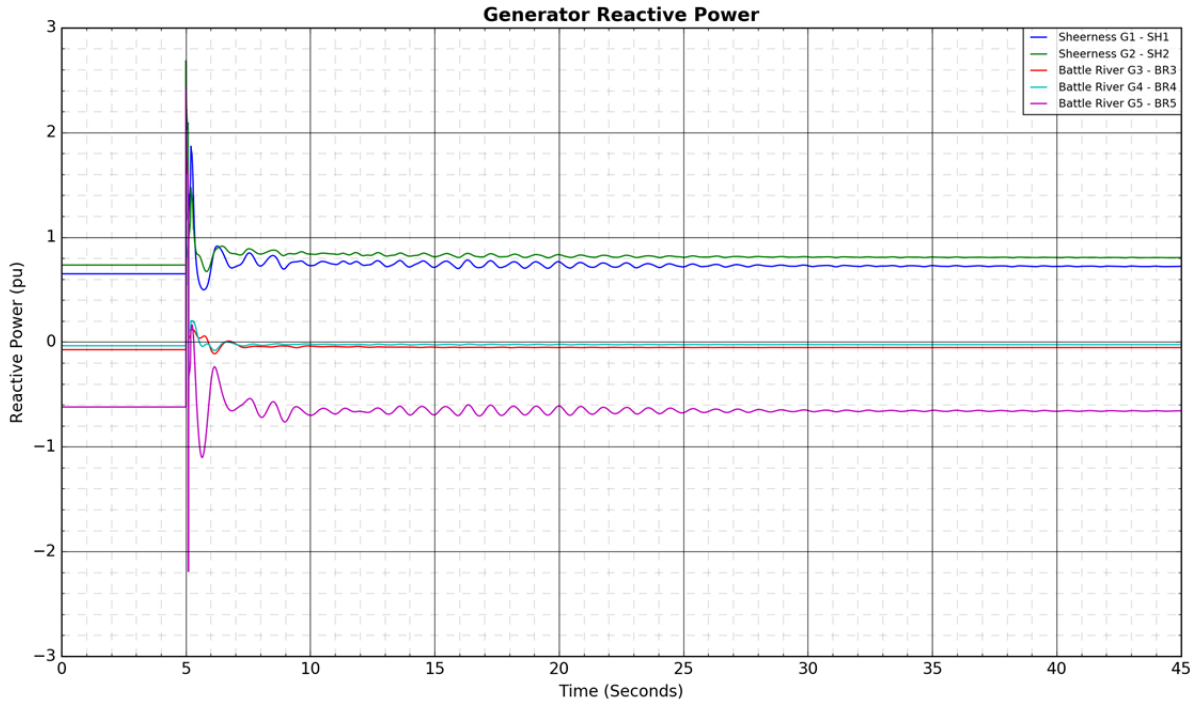
Generator Reactive Power
Sheerness G1 - SH1
Sheerness G2 - SH2
Battle River G3 - BR3
Battle River G4 - BR4
Battle River G5 - BR5
Reactive Power (pu)
Time (Seconds)
3
2
1
0
−1
−2
−3
0
5
10
15
20
25
30
35
40
45

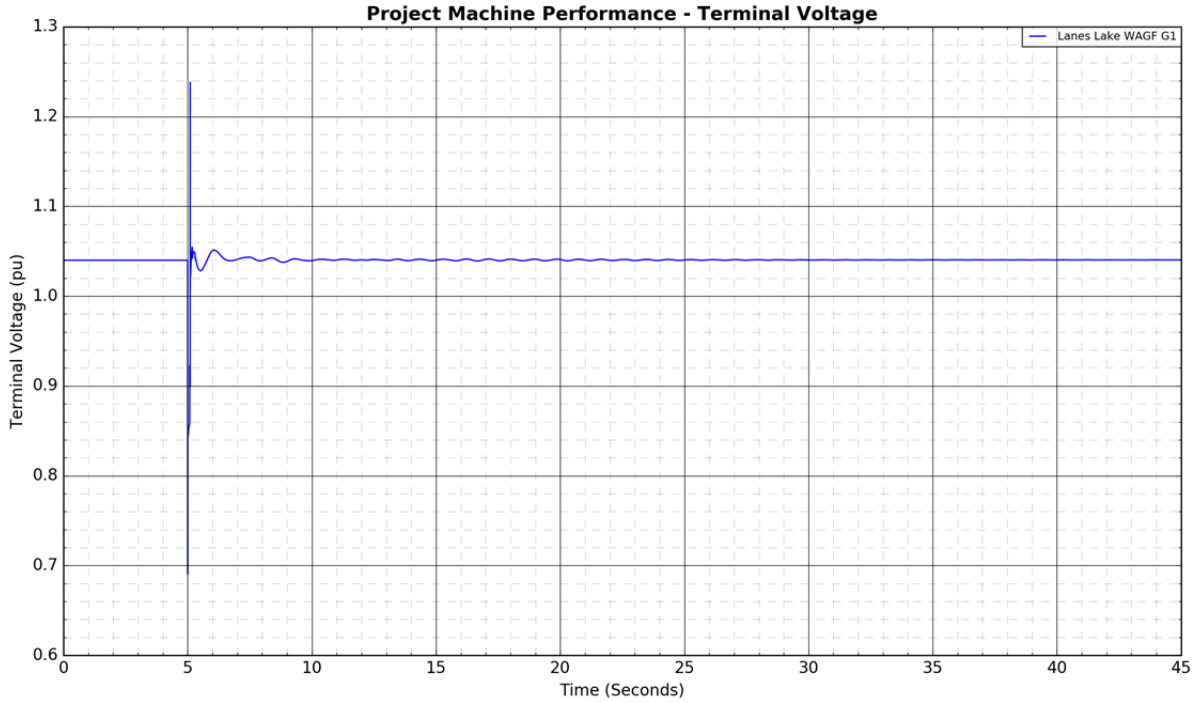
Project Machine Performance - Terminal Voltage
Lanes Lake WAGF G1
Terminal Voltage (pu)
Time (Seconds)
1.3
1.2
1.1
1.0
0.9
0.8
0.7
0.6
0
5
10
15
20
25
30
35
40
45


Project Machine Performance - Active Power
Lanes Lake WAGF G1
Active Power (pu)
Time (Seconds)
2.2
2.0
1.8
1.6
1.4
1.2
1.0
0.8
0
5
10
15
20
25
30
35
40
45

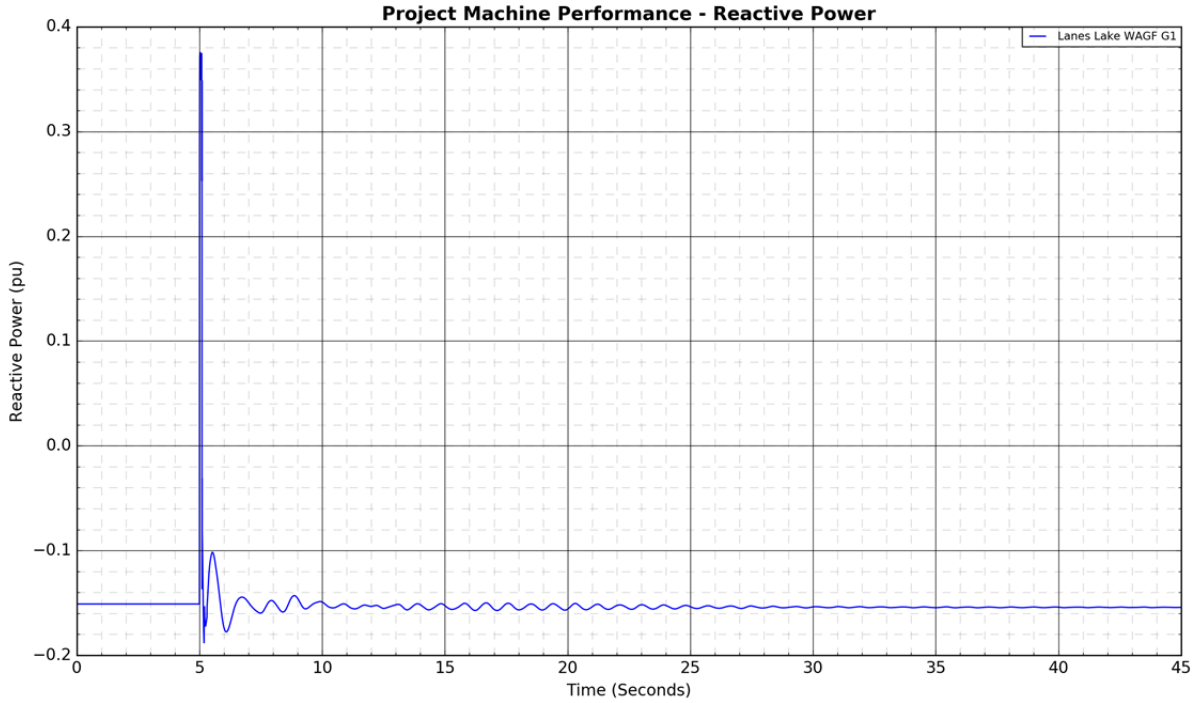
Project Machine Performance - Reactive Power
Lanes Lake WAGF G1
Reactive Power (pu)
Time (Seconds)
0.4
0.3
0.2
0.1
0.0
−0.1
−0.2
0
5
10
15
20
25
30
35
40
45

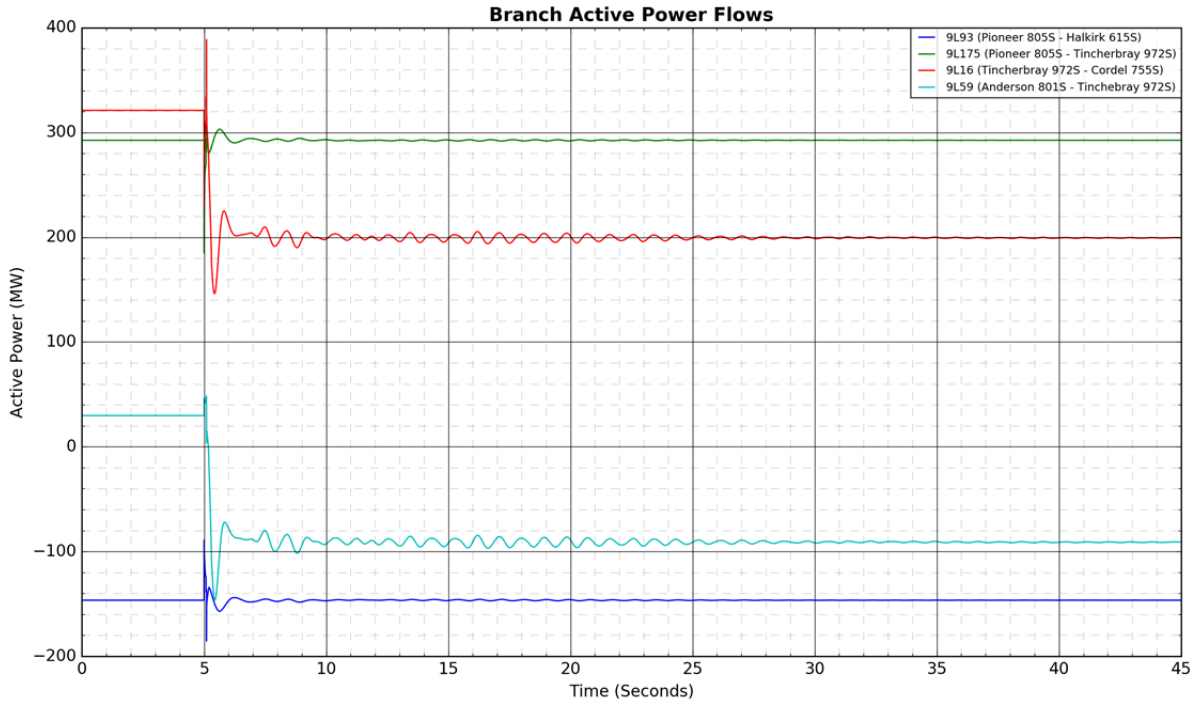
Branch Active Power Flows
9L93 (Pioneer 805S - Halkirk 615S)
9L175 (Pioneer 805S - Tincherbray 972S)
9L16 (Tincherbray 972S - Cordel 755S)
9L59 (Anderson 801S - Tinchebray 972S)
Active Power (MW)
Time (Seconds)

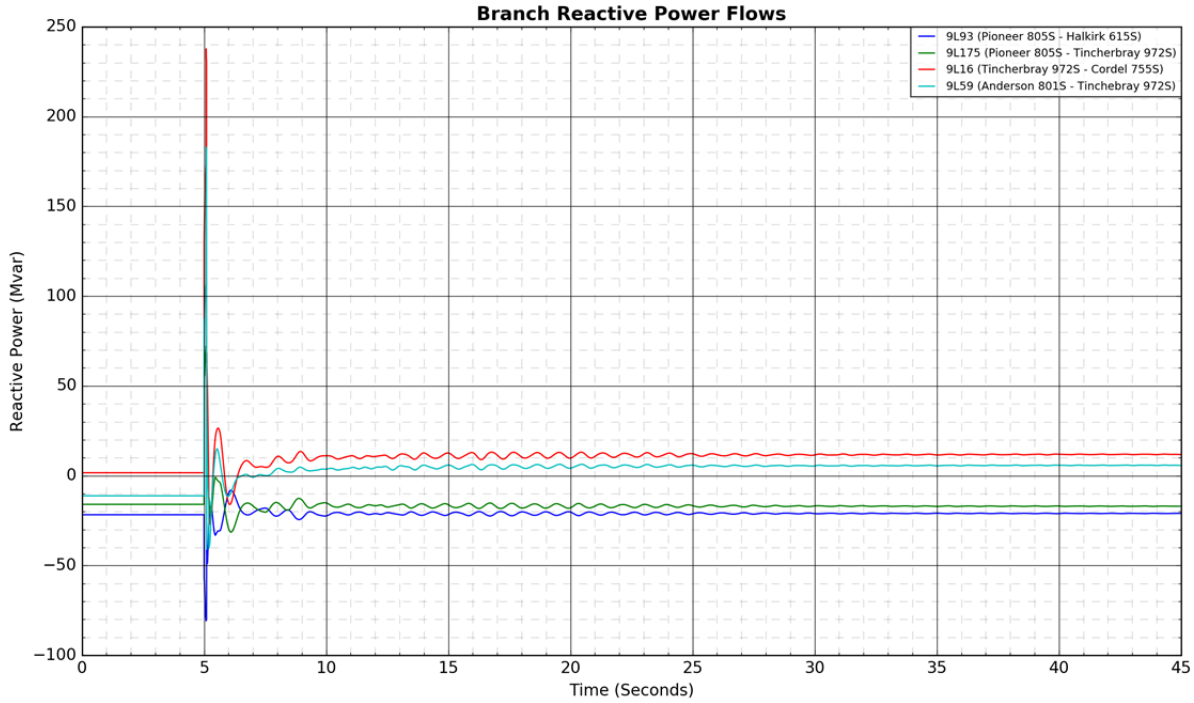
Branch Reactive Power Flows
9L93 (Pioneer 805S - Halkirk 615S)
9L175 (Pioneer 805S - Tincherbray 972S)
9L16 (Tincherbray 972S - Cordel 755S)
9L59 (Anderson 801S - Tinchebray 972S)
Reactive Power (Mvar)
Time (Seconds)

5. Stability Results 2019 Winter Peak - Case A

Figure A4-57: 9L24 (Oakland 946S - Lanfine 959S): 3-phase fault at Oakland 946S



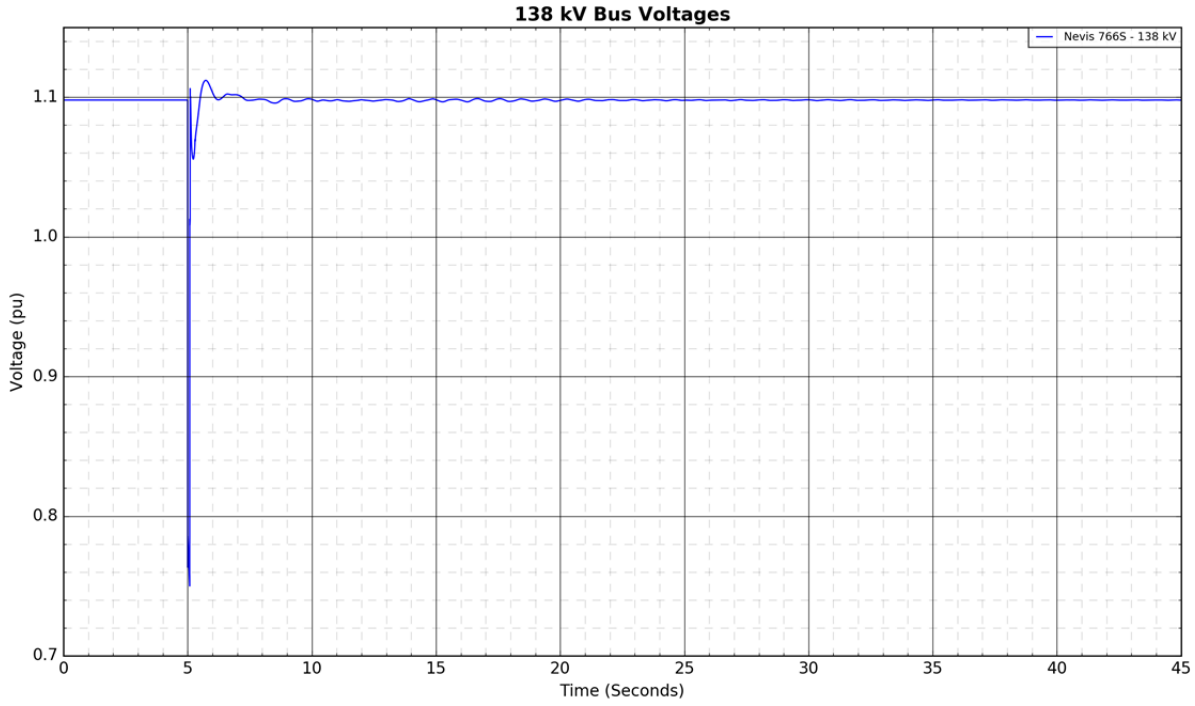

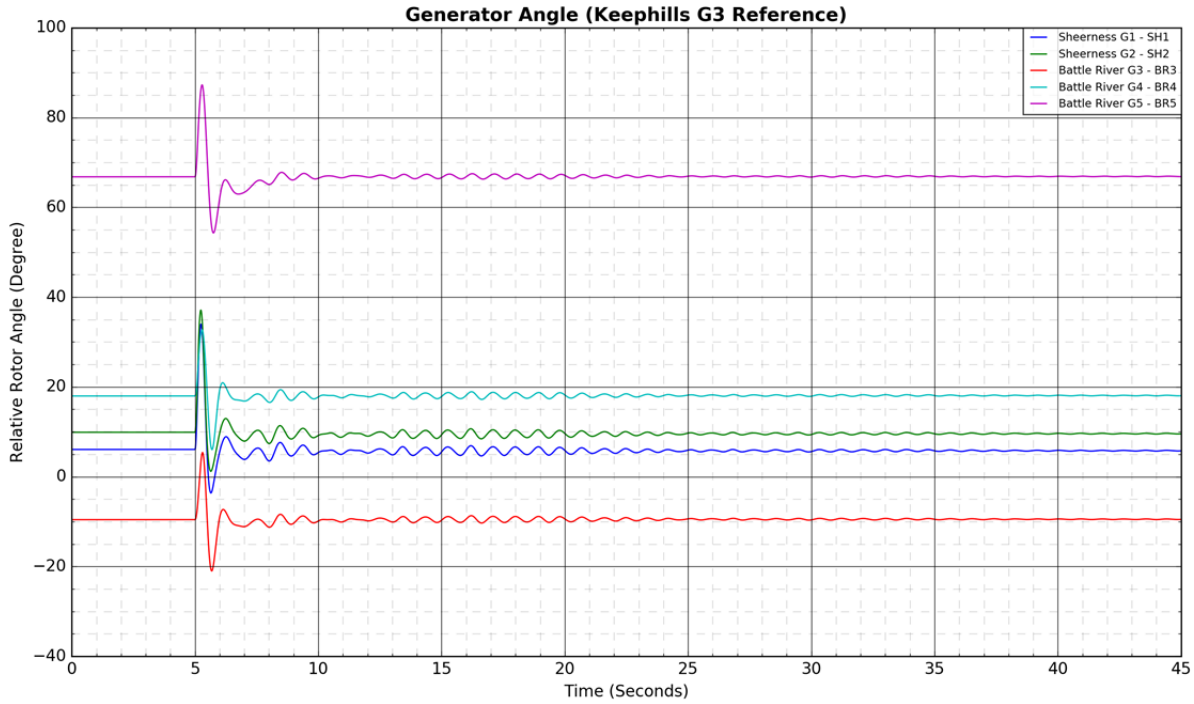
Generator Angle (Keephills G3 Reference)
Relative Rotor Angle (Degree)
Time (Seconds)
Sheerness G1 - SH1
Sheerness G2 - SH2
Battle River G3 - BR3
Battle River G4 - BR4
Battle River G5 - BR5

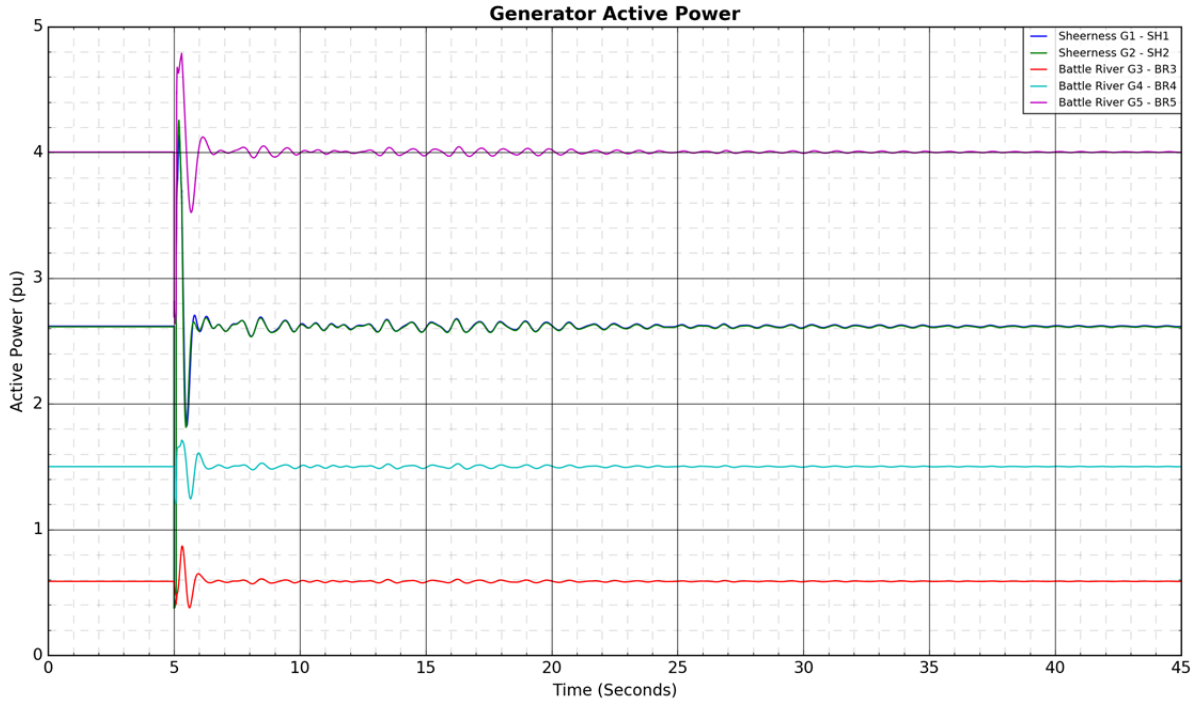
Generator Active Power
Active Power (pu)
Time (Seconds)
Sheerness G1 - SH1
Sheerness G2 - SH2
Battle River G3 - BR3
Battle River G4 - BR4
Battle River G5 - BR5

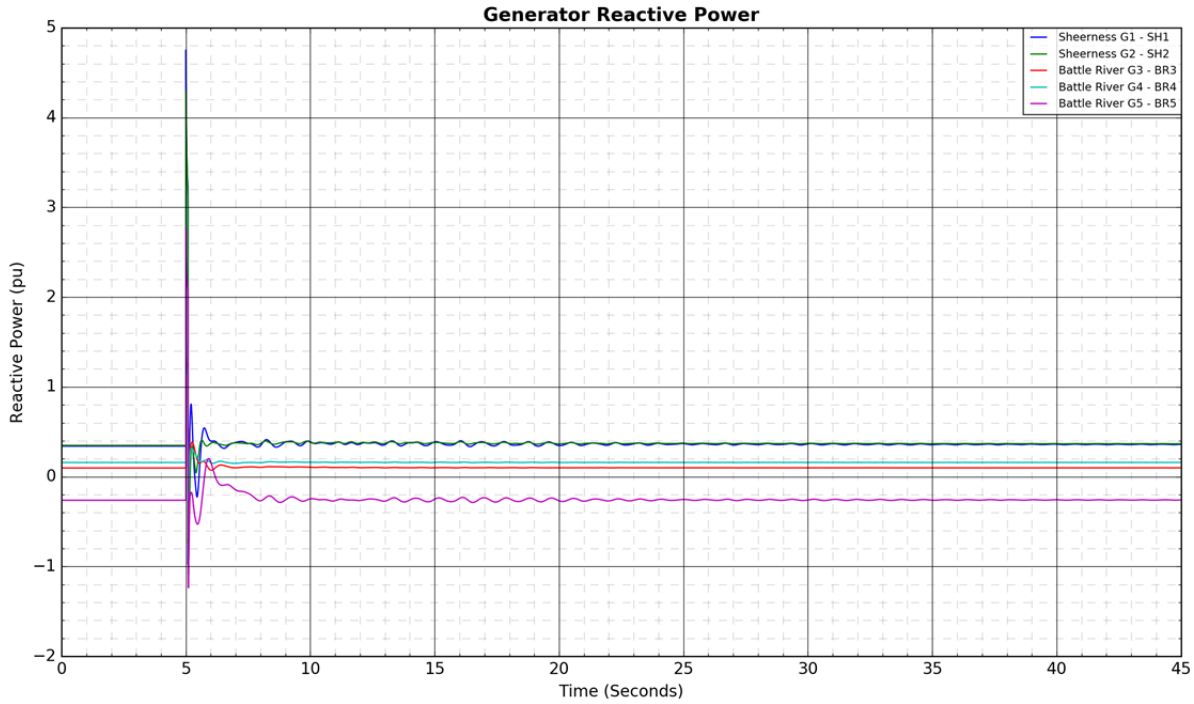
Generator Reactive Power
Sheerness G1 - SH1
Sheerness G2 - SH2
Battle River G3 - BR3
Battle River G4 - BR4
Battle River G5 - BR5
Reactive Power (pu)
Time (Seconds)

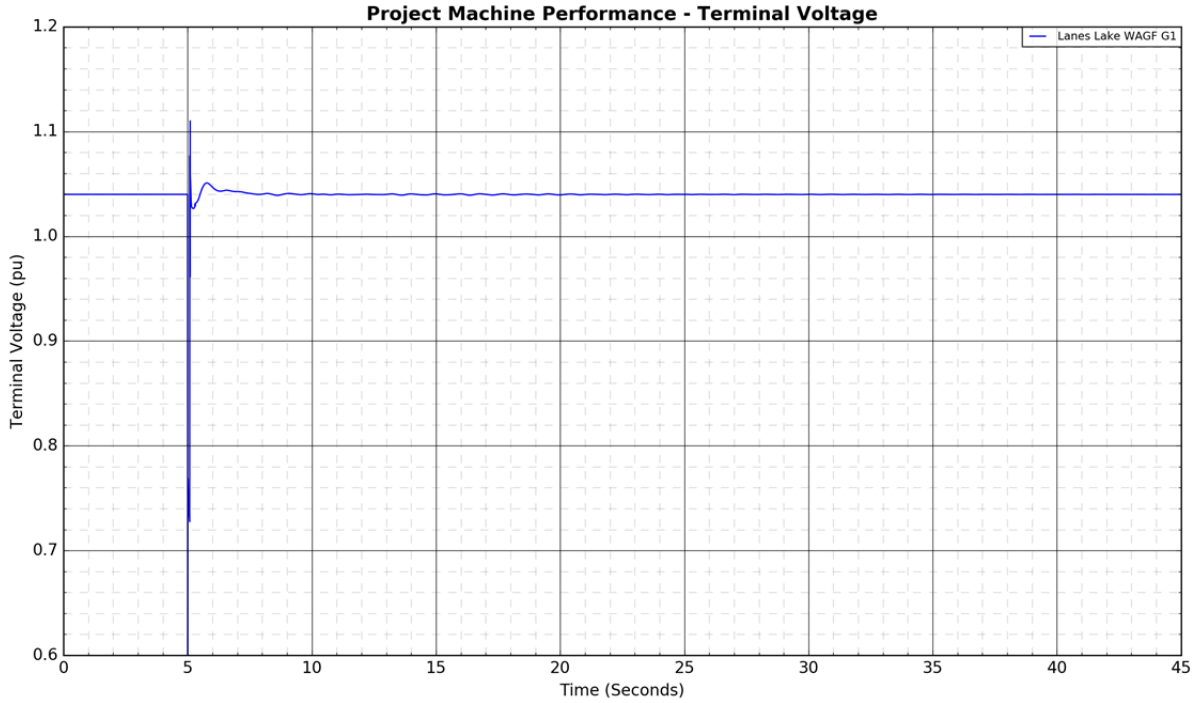
Project Machine Performance - Terminal Voltage
Lanes Lake WAGF G1
Terminal Voltage (pu)
Time (Seconds)


Project Machine Performance - Active Power
Lanes Lake WAGF G1
Active Power (pu)
Time (Seconds)
2.2
2.0
1.8
1.6
1.4
1.2
1.0
0.8
0
5
10
15
20
25
30
35
40
45

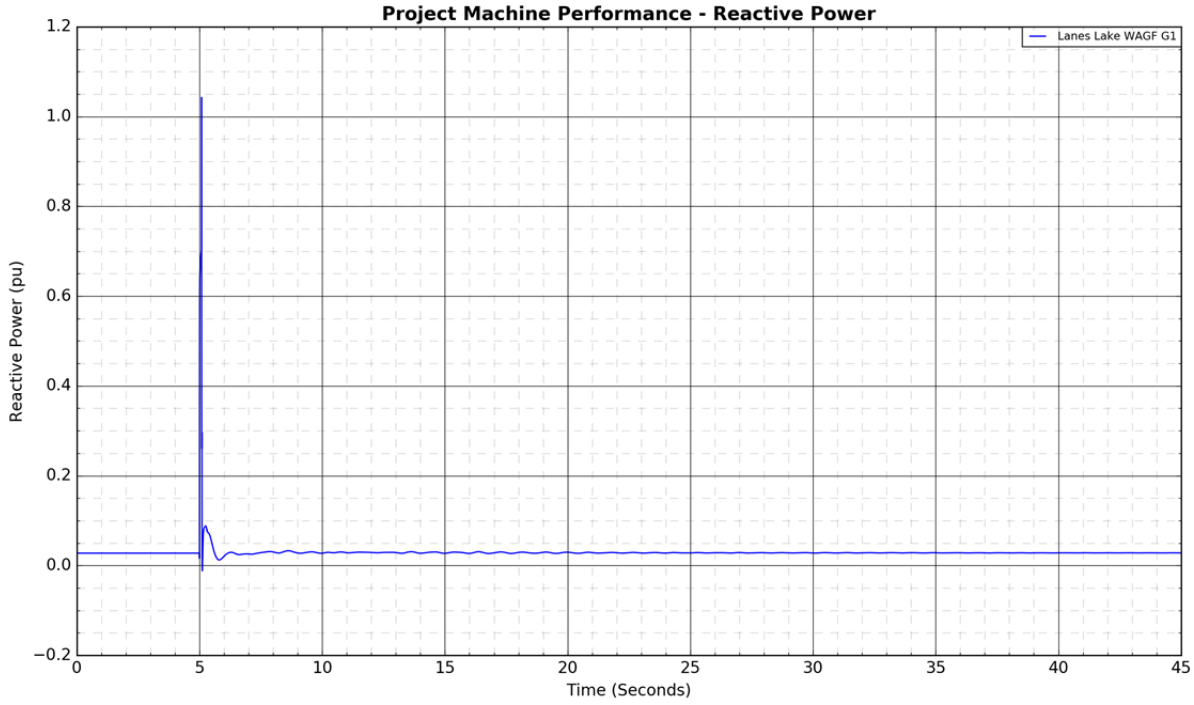
Project Machine Performance - Reactive Power
Lanes Lake WAGF G1
Reactive Power (pu)
Time (Seconds)
1.2
1.0
0.8
0.6
0.4
0.2
0.0
−0.2
0
5
10
15
20
25
30
35
40
45

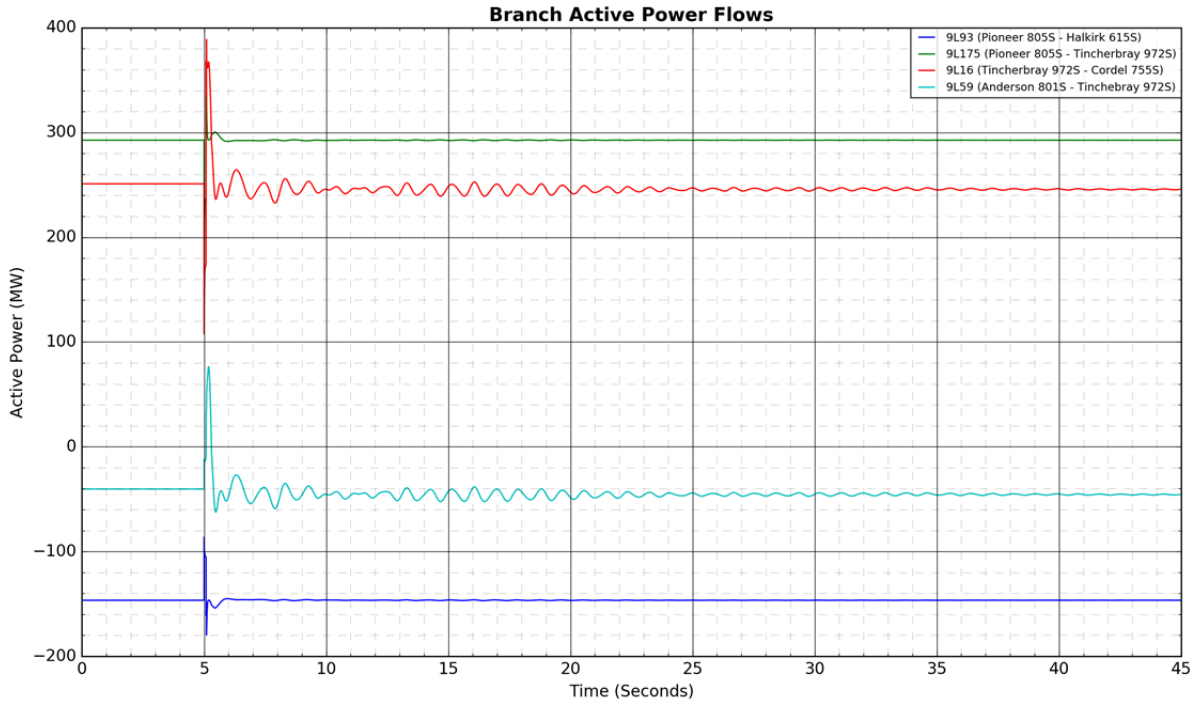
Branch Active Power Flows
9L93 (Pioneer 805S - Halkirk 615S)
9L175 (Pioneer 805S - Tincherbray 972S)
9L16 (Tincherbray 972S - Cordel 755S)
9L59 (Anderson 801S - Tinchebray 972S)
Active Power (MW)
Time (Seconds)

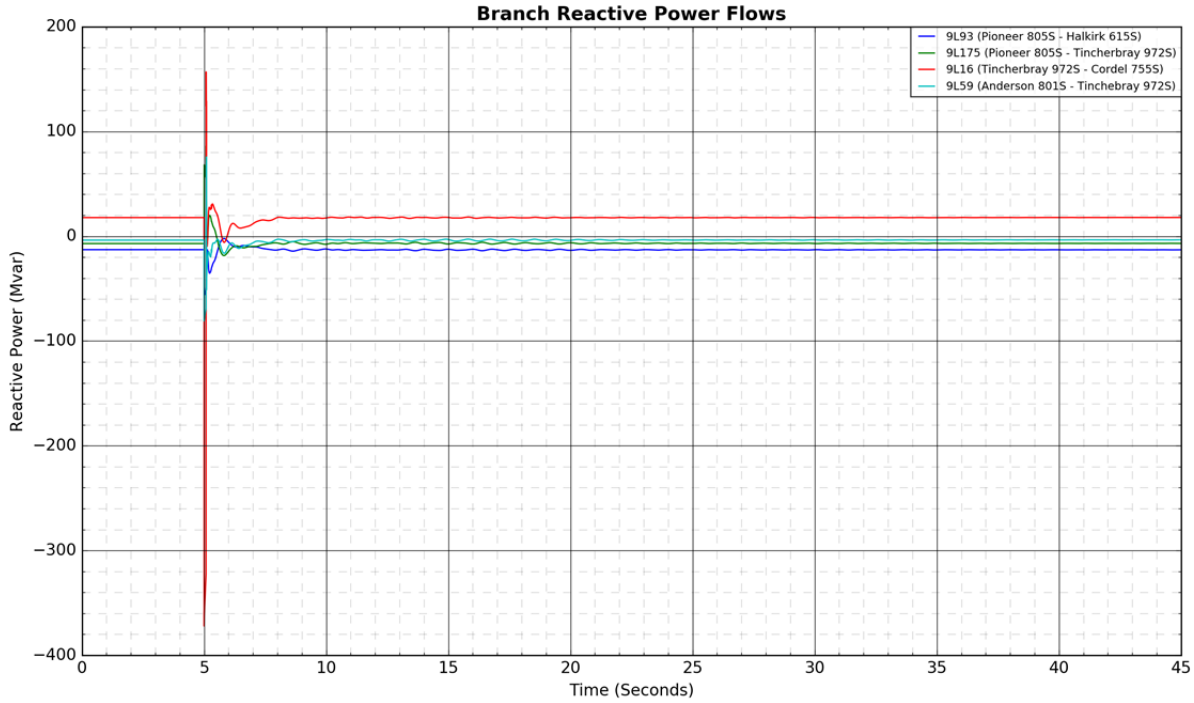
Branch Reactive Power Flows
9L93 (Pioneer 805S - Halkirk 615S)
9L175 (Pioneer 805S - Tincherbray 972S)
9L16 (Tincherbray 972S - Cordel 755S)
9L59 (Anderson 801S - Tinchebray 972S)
Reactive Power (Mvar)
Time (Seconds)

Figure A4-58: 9L24 (Oakland 946S - Lanfine 959S): 3-phase fault at Lanfine 959S

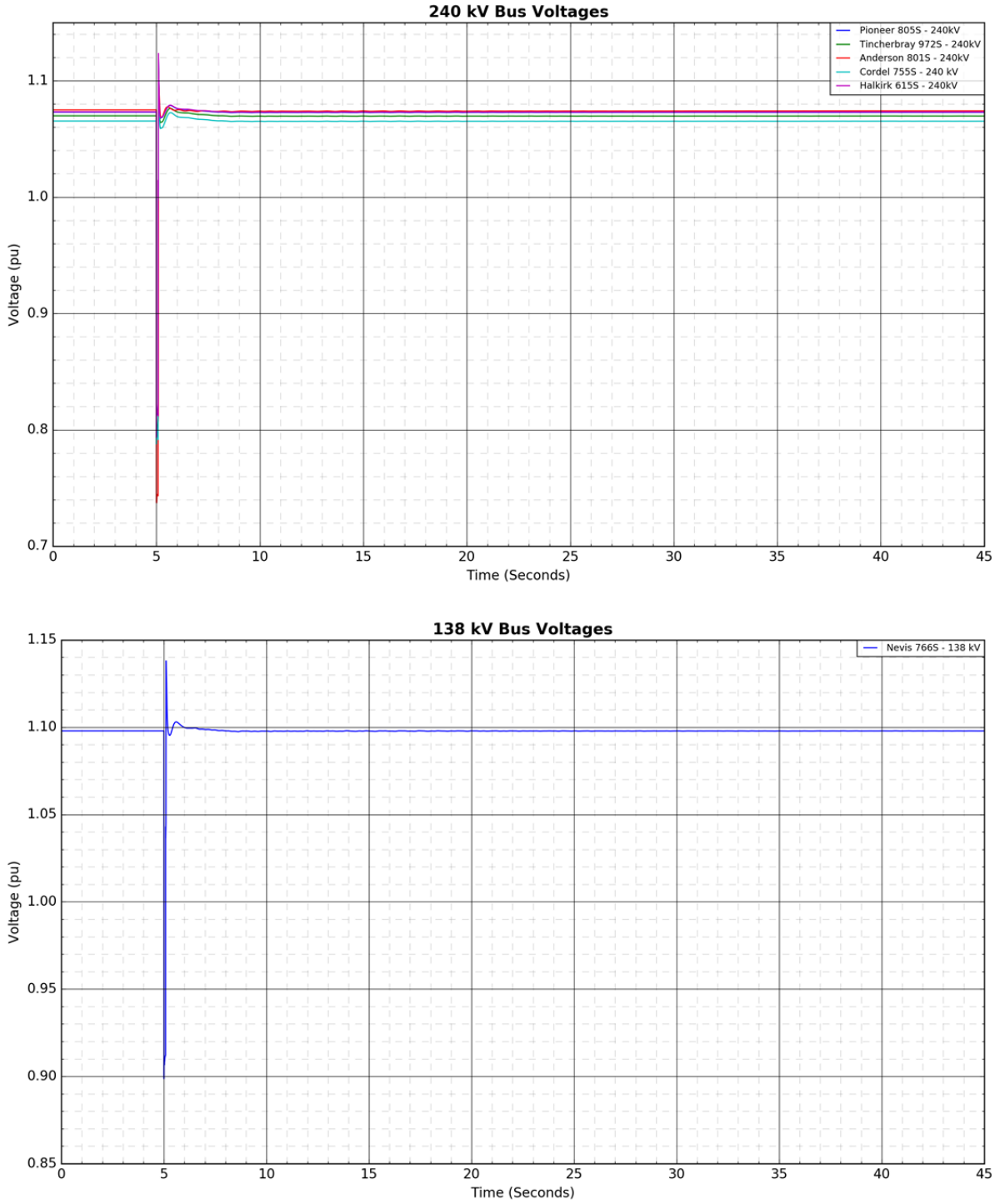

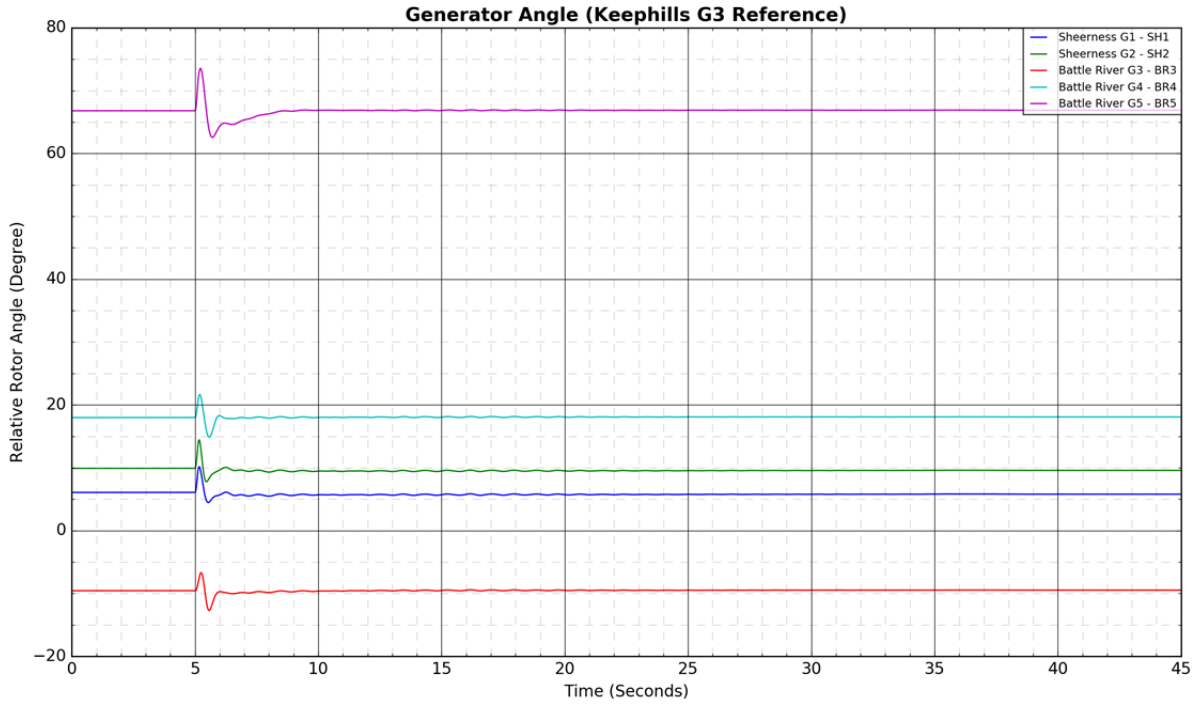
Generator Angle (Keephills G3 Reference)
Relative Rotor Angle (Degree)
Time (Seconds)
Sheerness G1 - SH1
Sheerness G2 - SH2
Battle River G3 - BR3
Battle River G4 - BR4
Battle River G5 - BR5

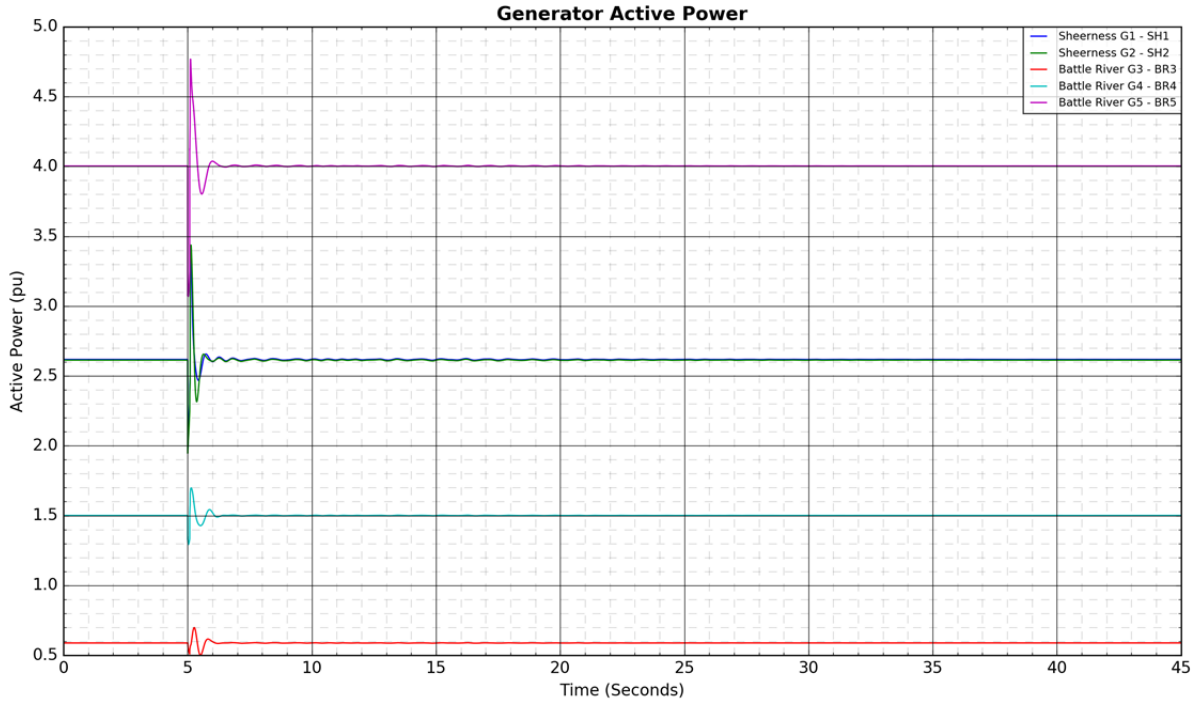
Generator Active Power
Active Power (pu)
Time (Seconds)
Sheerness G1 - SH1
Sheerness G2 - SH2
Battle River G3 - BR3
Battle River G4 - BR4
Battle River G5 - BR5

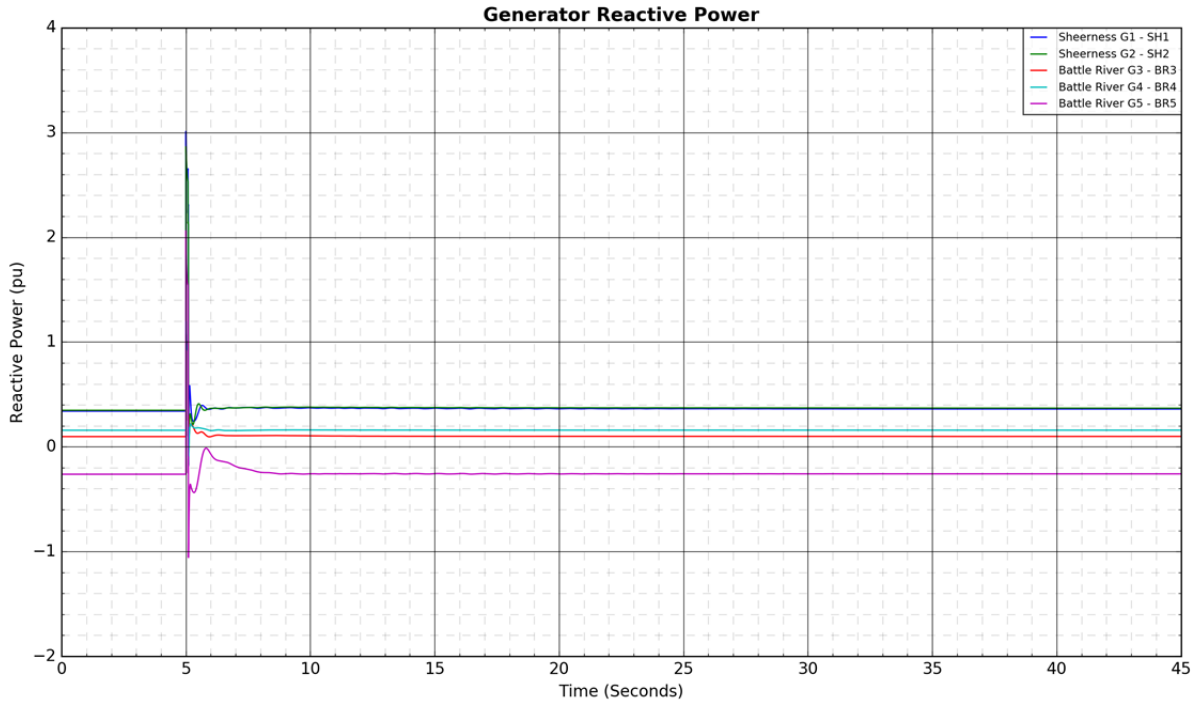
Generator Reactive Power
Sheerness G1 - SH1
Sheerness G2 - SH2
Battle River G3 - BR3
Battle River G4 - BR4
Battle River G5 - BR5
Reactive Power (pu)
Time (Seconds)

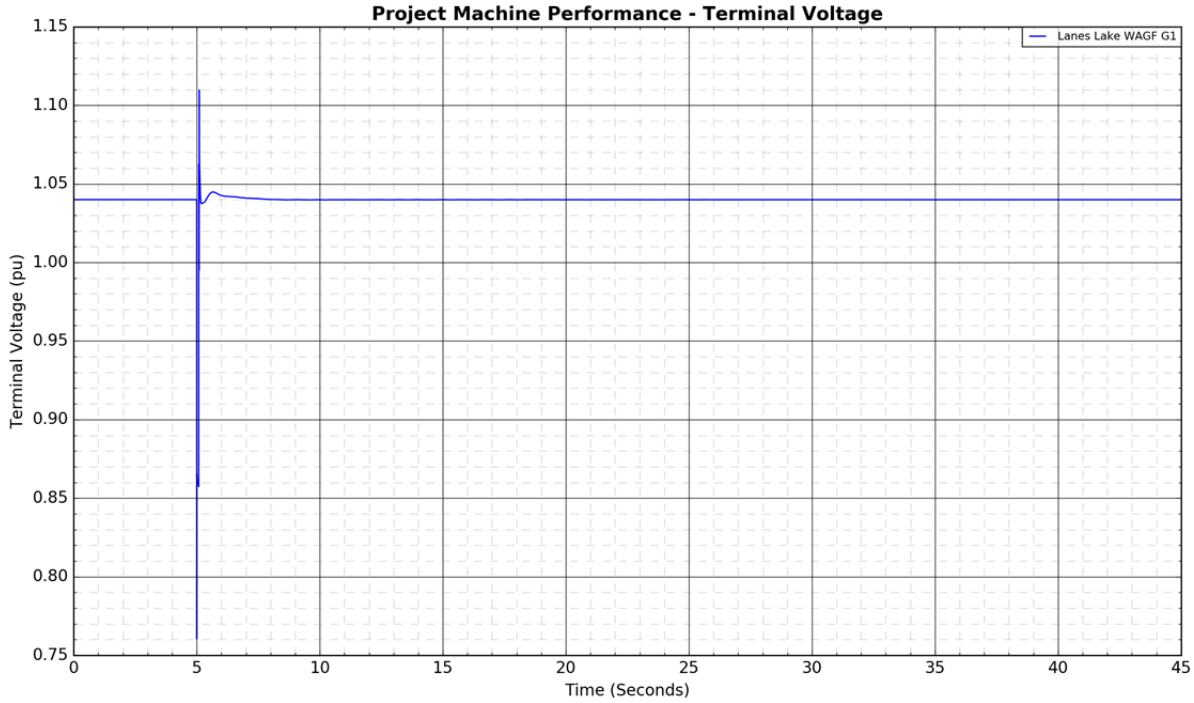
Project Machine Performance - Terminal Voltage
Lanes Lake WAGF G1
Terminal Voltage (pu)
Time (Seconds)


Project Machine Performance - Active Power
Lanes Lake WAGF G1
Active Power (pu)
1.9
1.8
1.7
1.6
1.5
1.4
1.3
1.2
1.1
1.0
0
5
10
15
20
25
30
35
40
45
Time (Seconds)

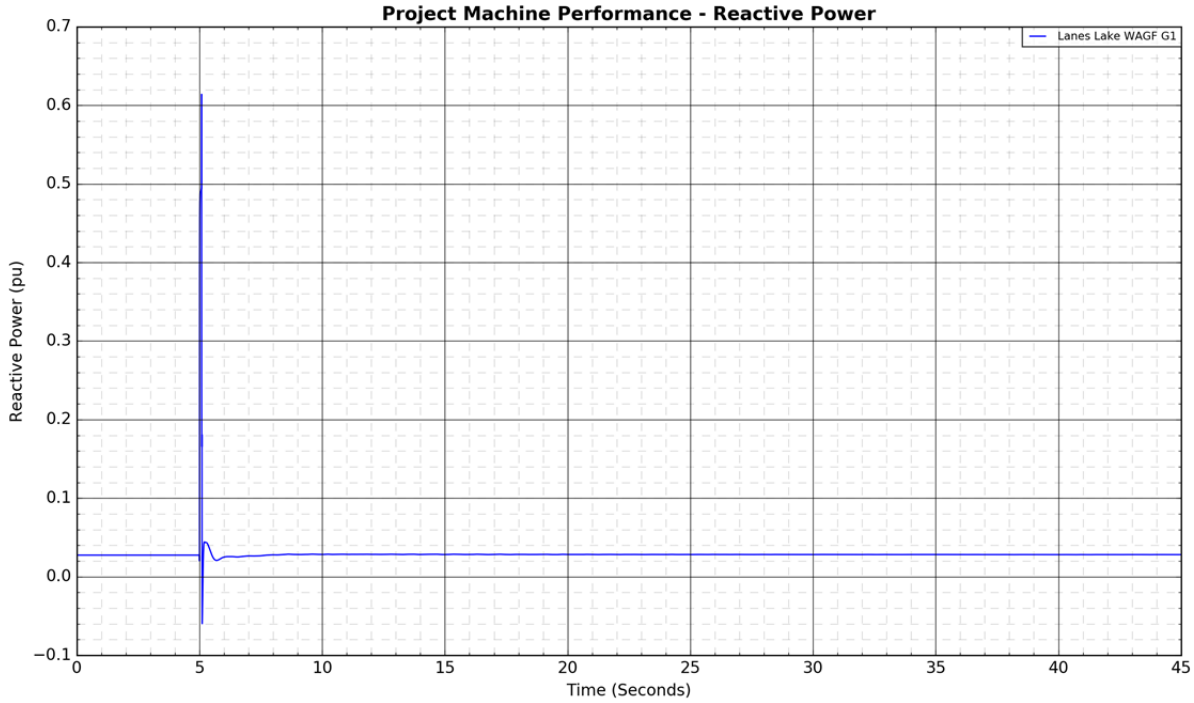
Project Machine Performance - Reactive Power
Lanes Lake WAGF G1
Reactive Power (pu)
0.7
0.6
0.5
0.4
0.3
0.2
0.1
0.0
−0.1
0
5
10
15
20
25
30
35
40
45
Time (Seconds)


Branch Active Power Flows
9L93 (Pioneer 805S - Halkirk 615S)
9L175 (Pioneer 805S - Tincherbray 972S)
9L16 (Tincherbray 972S - Cordel 755S)
9L59 (Anderson 801S - Tinchebray 972S)
Active Power (MW)
Time (Seconds)

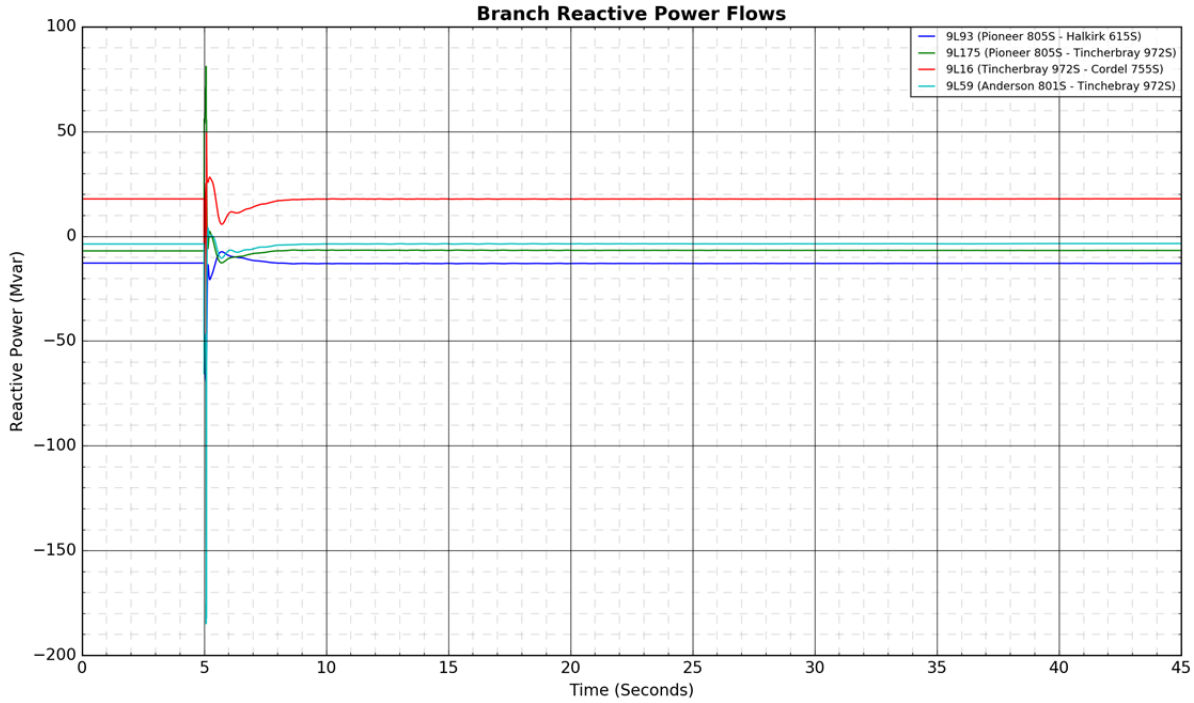
Branch Reactive Power Flows
9L93 (Pioneer 805S - Halkirk 615S)
9L175 (Pioneer 805S - Tincherbray 972S)
9L16 (Tincherbray 972S - Cordel 755S)
9L59 (Anderson 801S - Tinchebray 972S)
Reactive Power (Mvar)
Time (Seconds)

Figure A4-59: 9L29 (Oakland 946S - Coyote Lake 963S): 3-phase fault at Oakland 946S



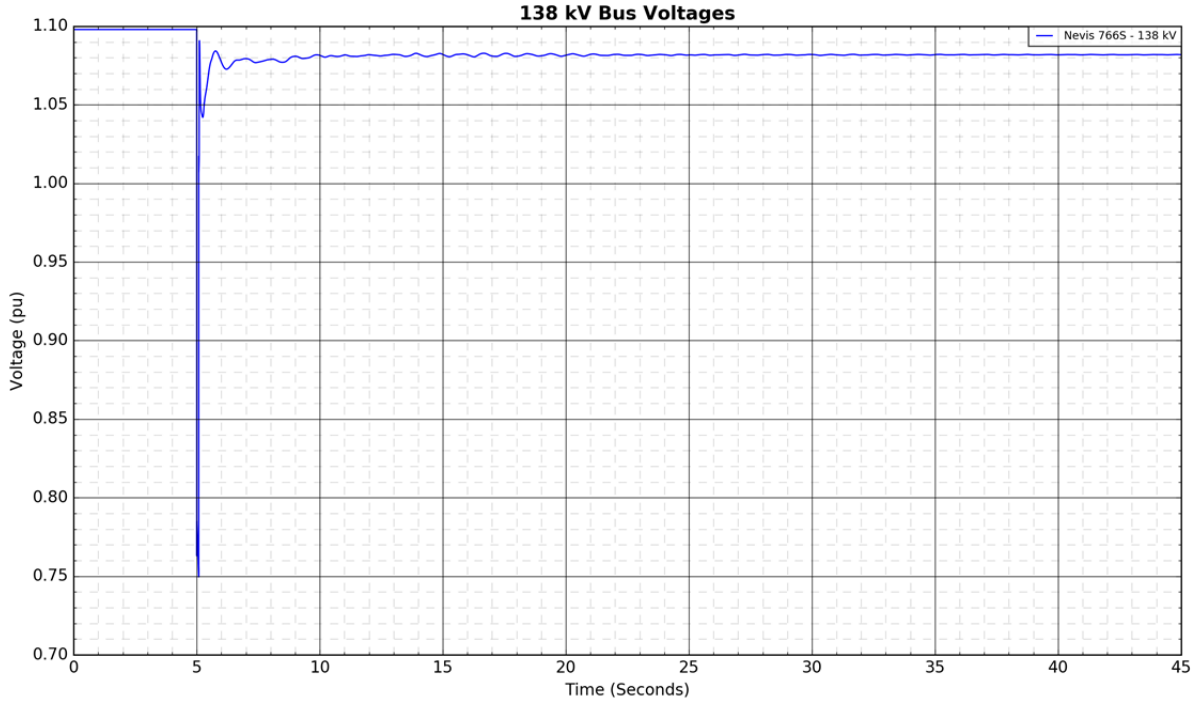

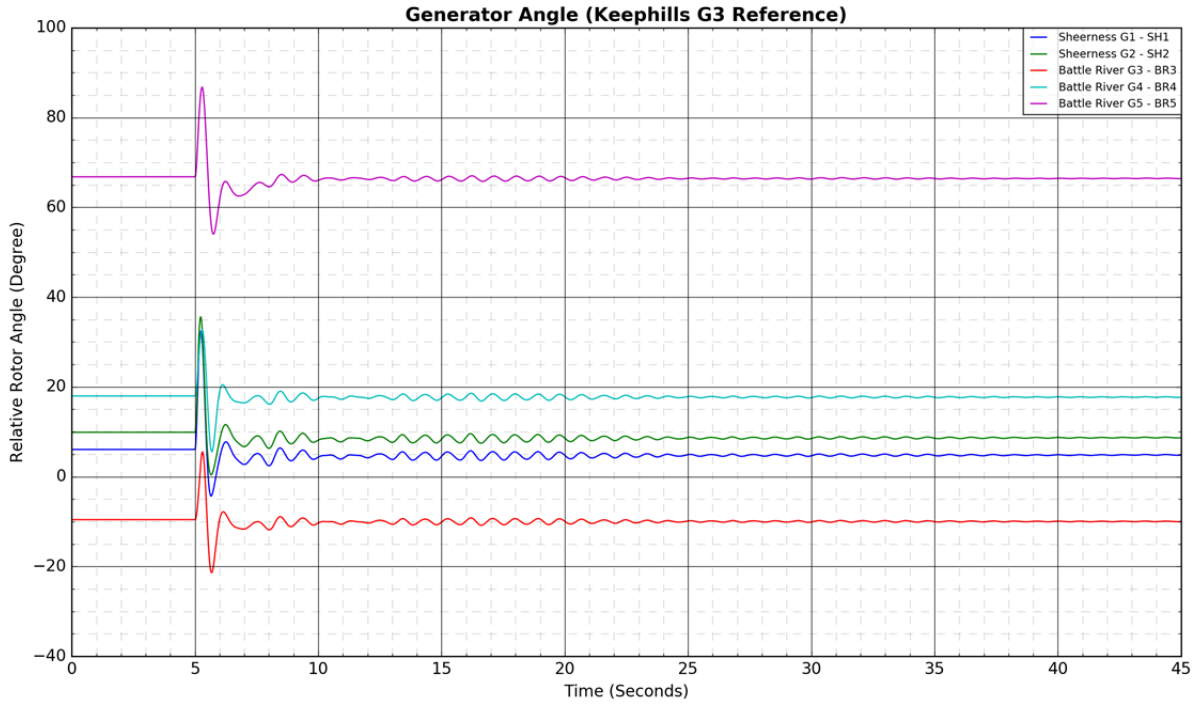
Generator Angle (Keephills G3 Reference)
Relative Rotor Angle (Degree)
Time (Seconds)
Sheerness G1 - SH1
Sheerness G2 - SH2
Battle River G3 - BR3
Battle River G4 - BR4
Battle River G5 - BR5

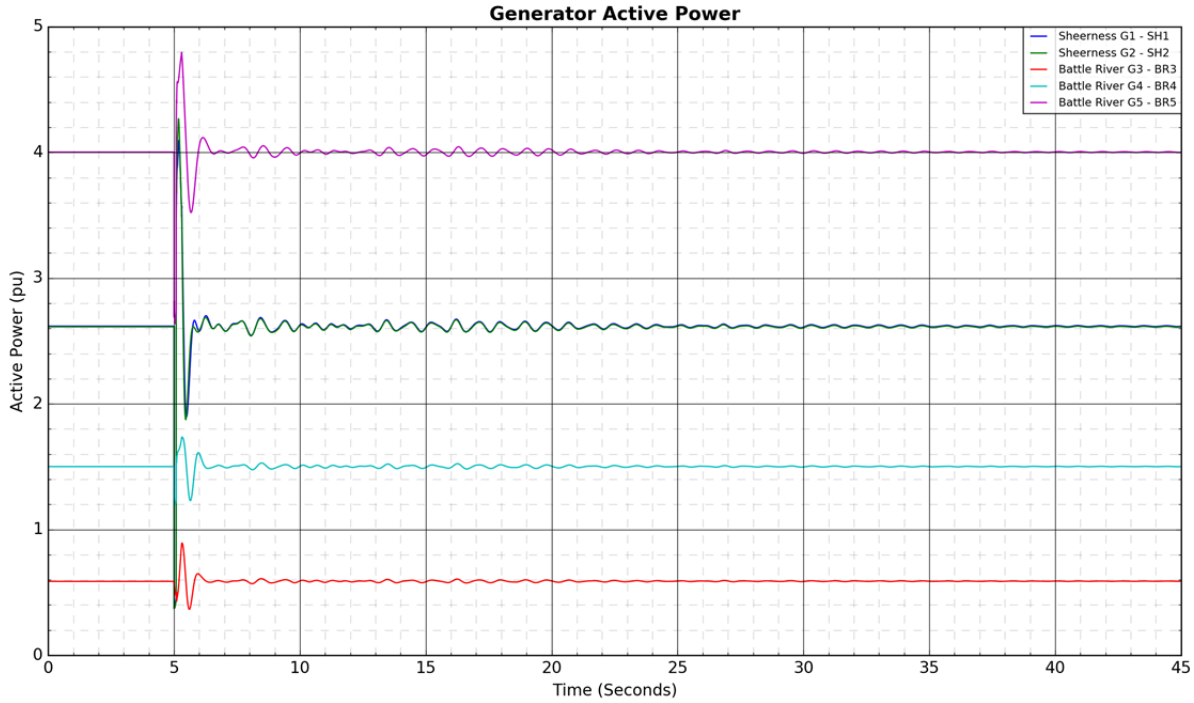
Generator Active Power
Active Power (pu)
Time (Seconds)
Sheerness G1 - SH1
Sheerness G2 - SH2
Battle River G3 - BR3
Battle River G4 - BR4
Battle River G5 - BR5

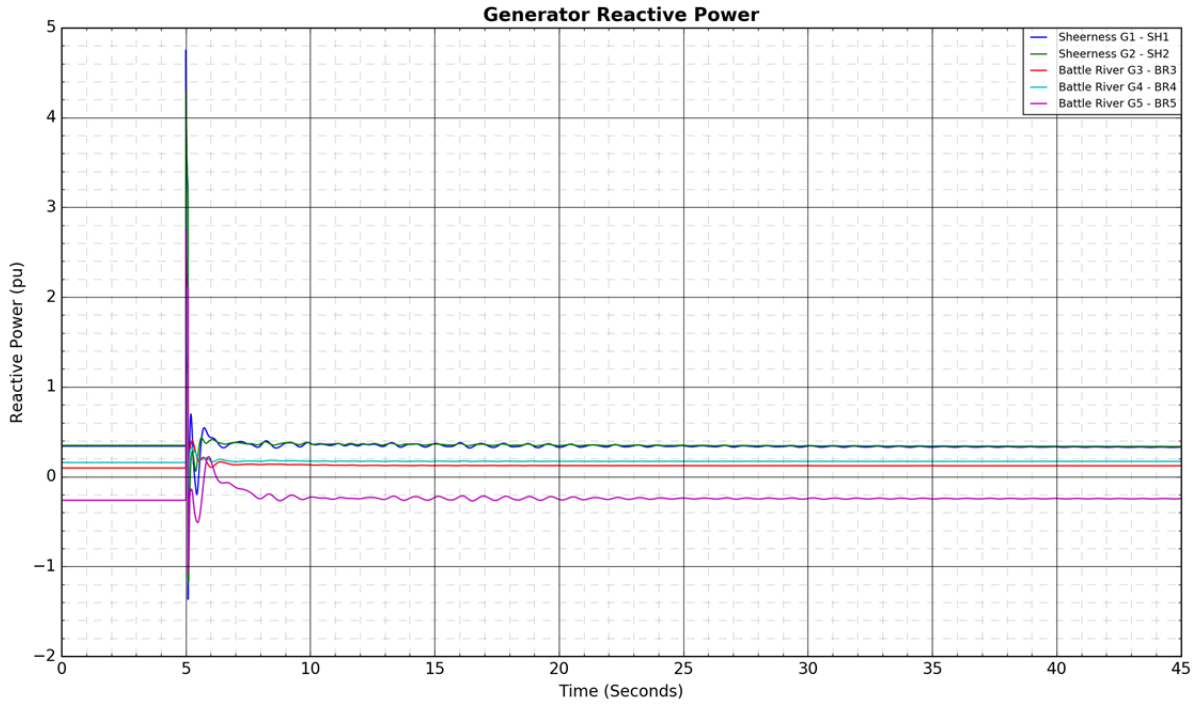
Generator Reactive Power
Sheerness G1 - SH1
Sheerness G2 - SH2
Battle River G3 - BR3
Battle River G4 - BR4
Battle River G5 - BR5
Reactive Power (pu)
Time (Seconds)

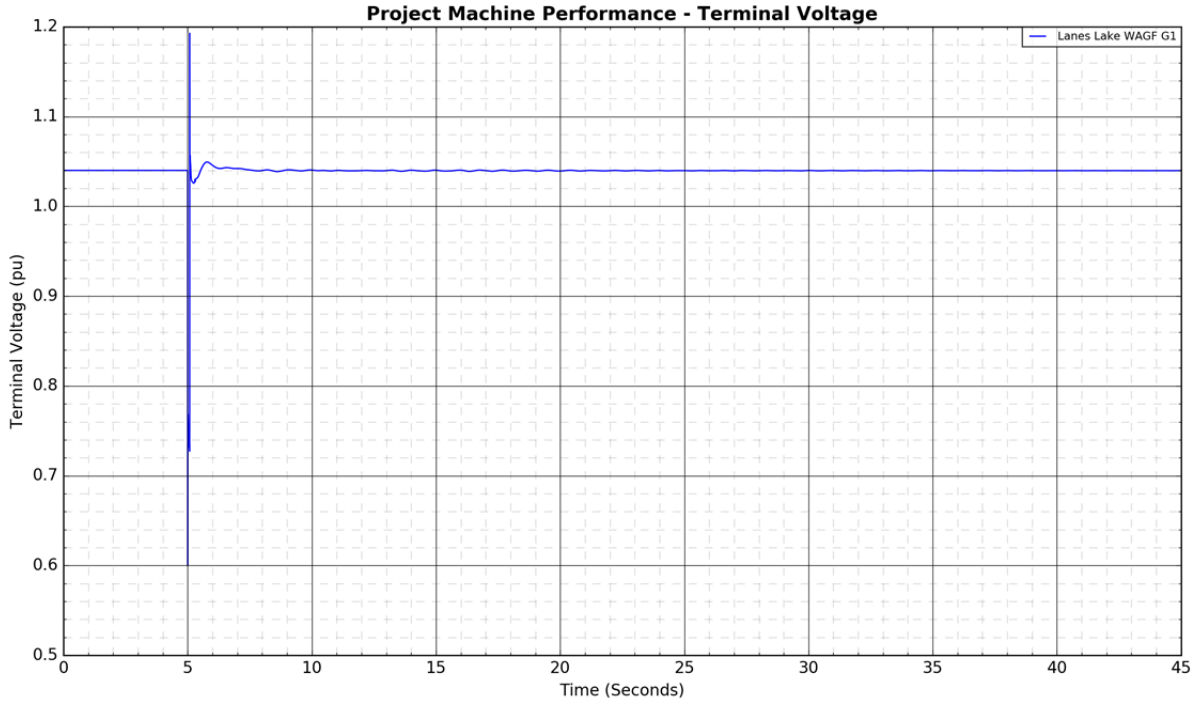
Project Machine Performance - Terminal Voltage
Lanes Lake WAGF G1
Terminal Voltage (pu)
Time (Seconds)


Project Machine Performance - Active Power
Lanes Lake WAGF G1
Active Power (pu)
Time (Seconds)
2.4
2.2
2.0
1.8
1.6
1.4
1.2
1.0
0.8
0
5
10
15
20
25
30
35
40
45

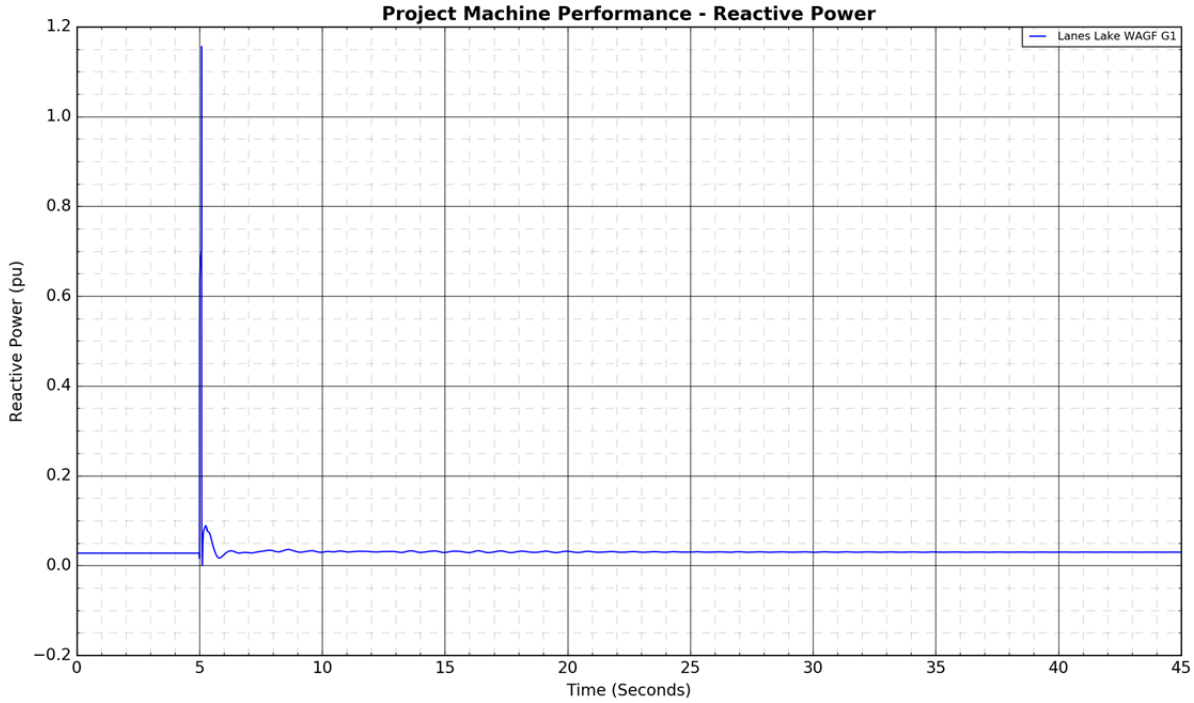
Project Machine Performance - Reactive Power
Lanes Lake WAGF G1
Reactive Power (pu)
Time (Seconds)
1.2
1.0
0.8
0.6
0.4
0.2
0.0
−0.2
0
5
10
15
20
25
30
35
40
45

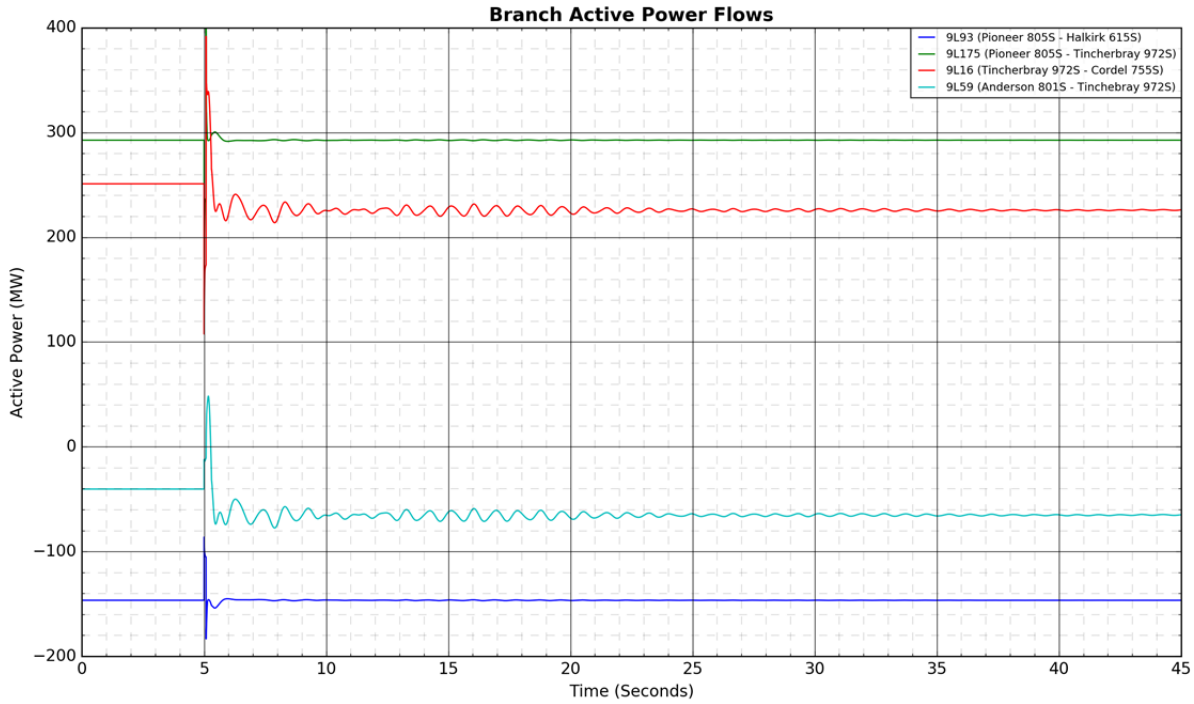
Branch Active Power Flows
9L93 (Pioneer 805S - Halkirk 615S)
9L175 (Pioneer 805S - Tincherbray 972S)
9L16 (Tincherbray 972S - Cordel 755S)
9L59 (Anderson 801S - Tinchebray 972S)
Active Power (MW)
Time (Seconds)

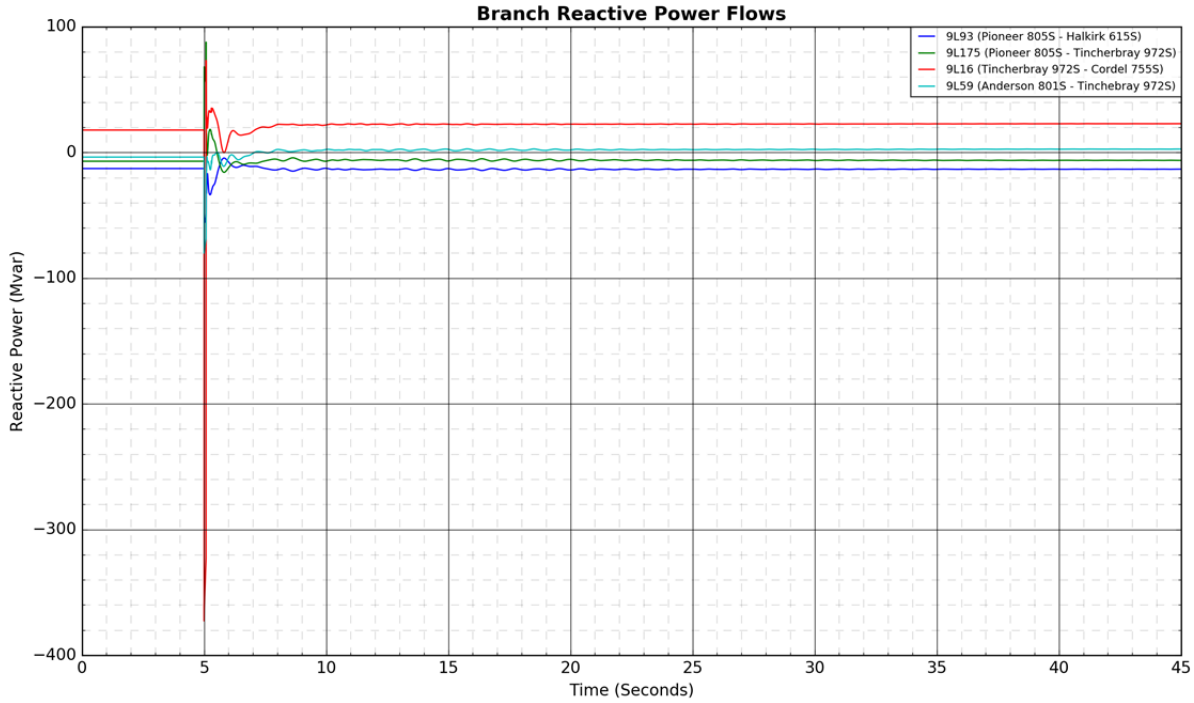
Branch Reactive Power Flows
9L93 (Pioneer 805S - Halkirk 615S)
9L175 (Pioneer 805S - Tincherbray 972S)
9L16 (Tincherbray 972S - Cordel 755S)
9L59 (Anderson 801S - Tinchebray 972S)
Reactive Power (Mvar)
Time (Seconds)

Figure A4-60: 9L29 (Oakland 946S - Coyote Lake 963S): 3-phase fault at Coyote Lake 963S

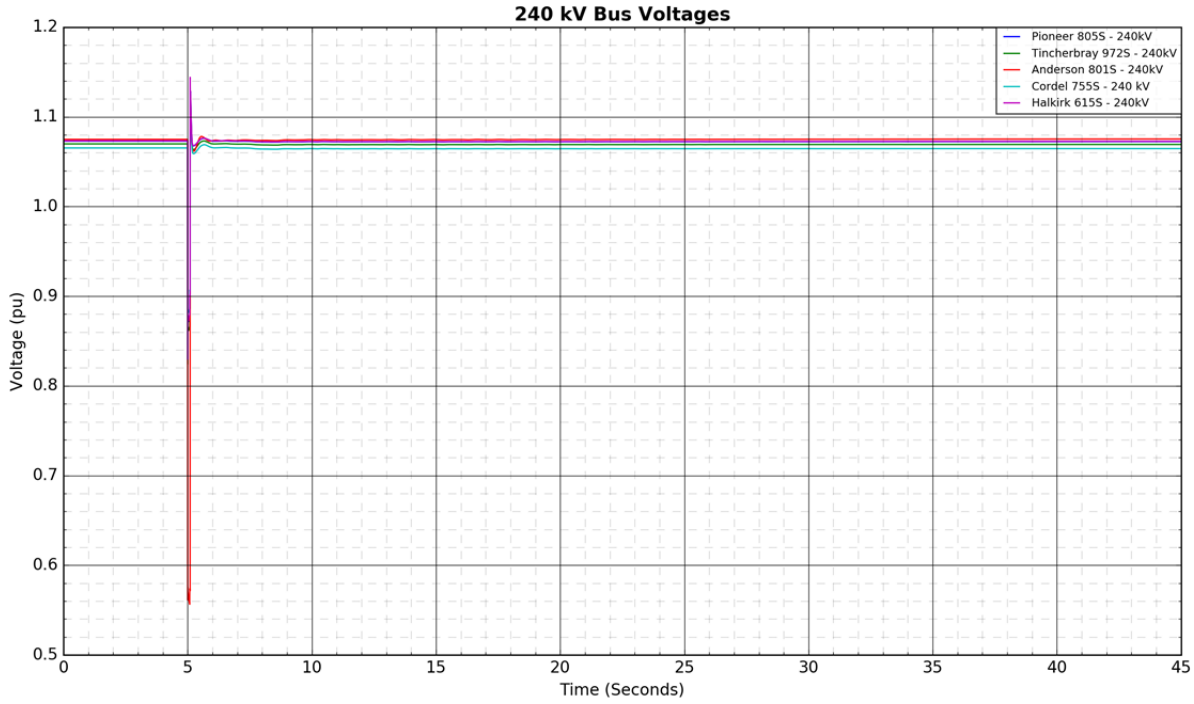

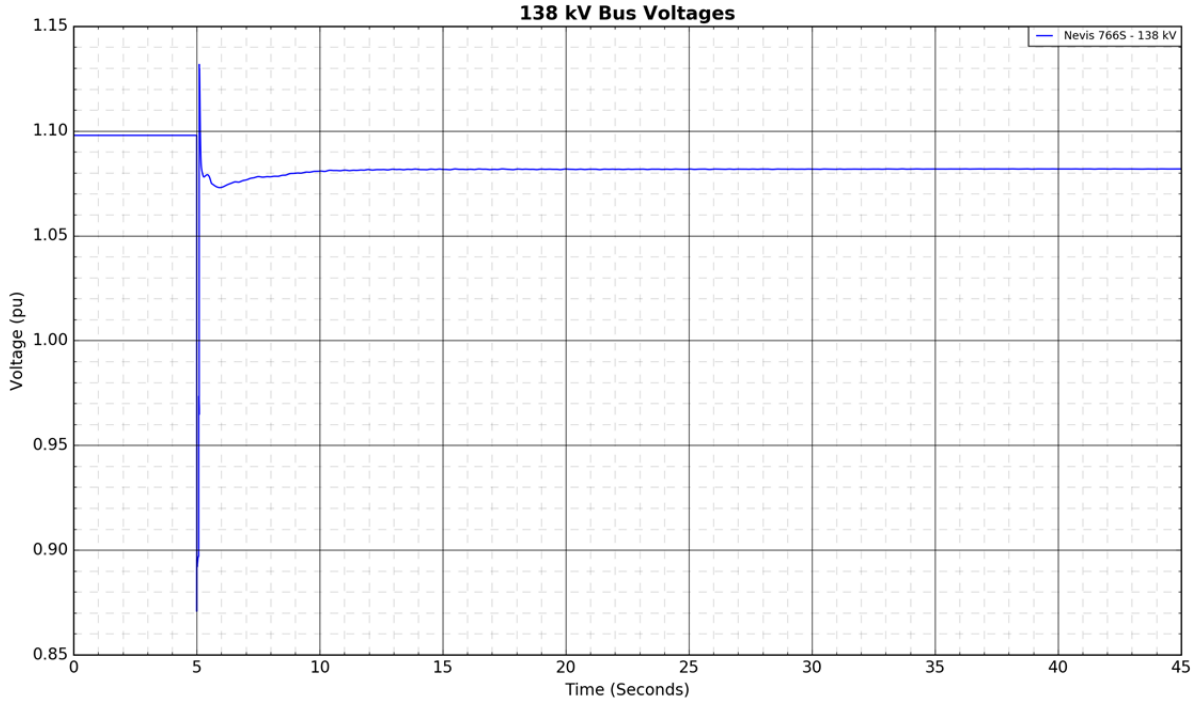

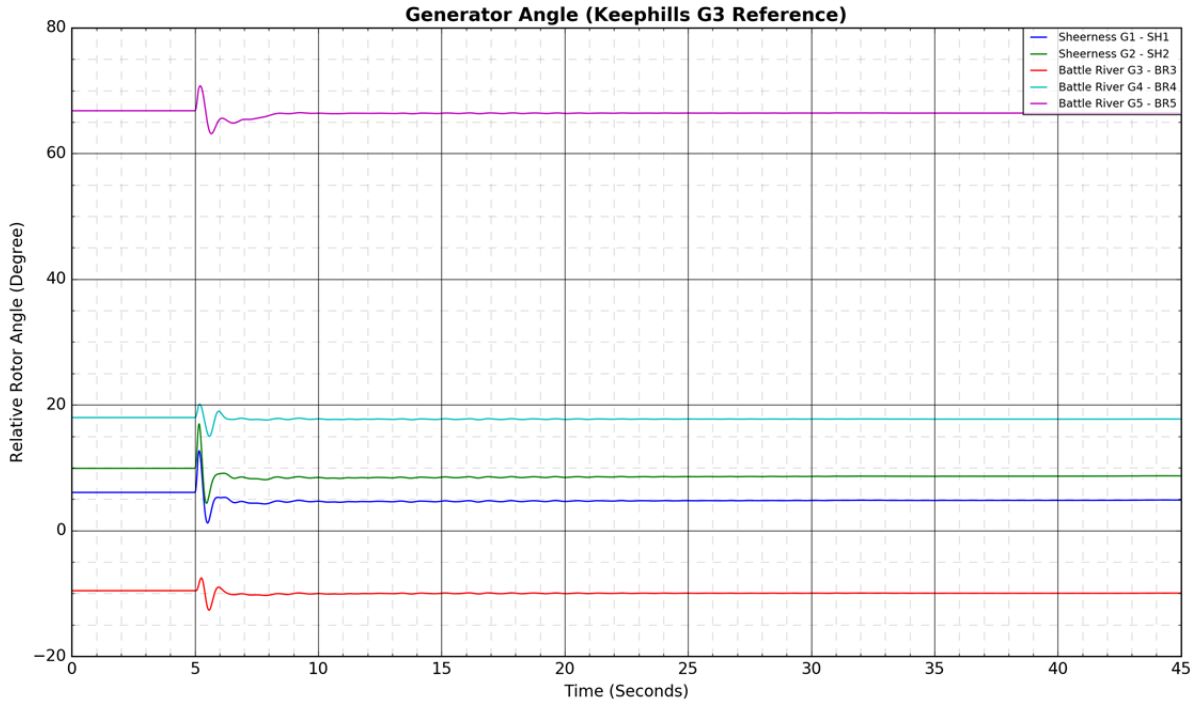
Generator Angle (Keephills G3 Reference)
Relative Rotor Angle (Degree)
Time (Seconds)
Sheerness G1 - SH1
Sheerness G2 - SH2
Battle River G3 - BR3
Battle River G4 - BR4
Battle River G5 - BR5

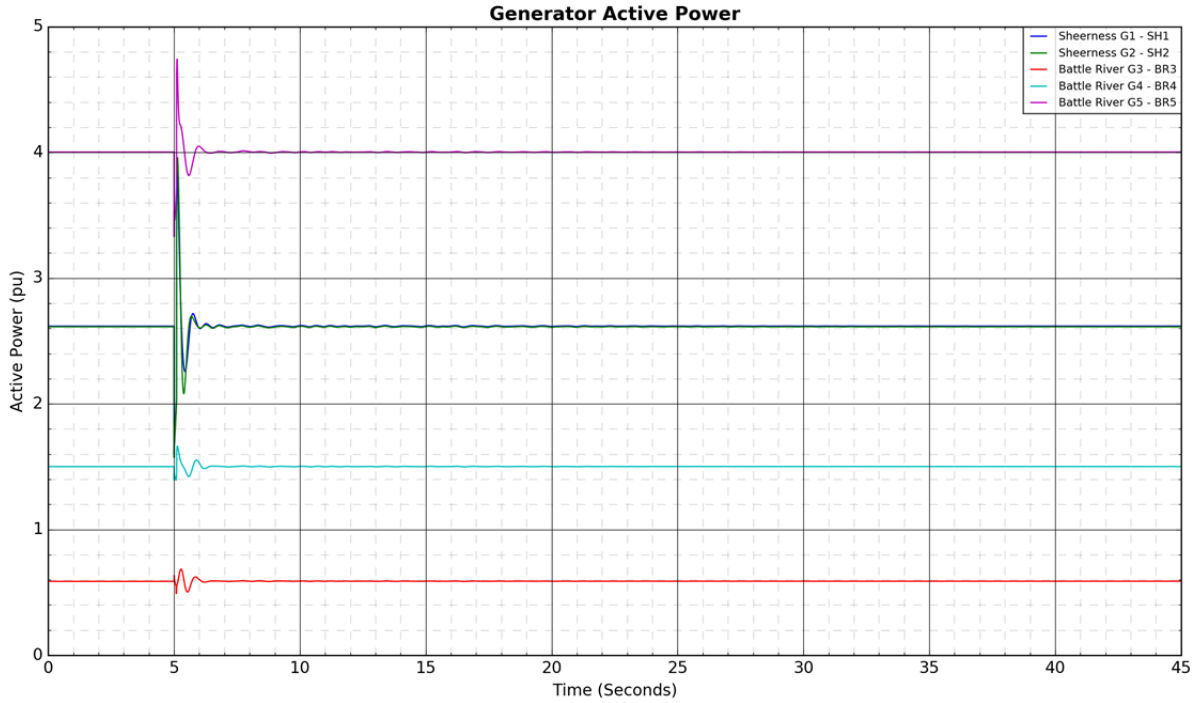
Generator Active Power
Active Power (pu)
Time (Seconds)
Sheerness G1 - SH1
Sheerness G2 - SH2
Battle River G3 - BR3
Battle River G4 - BR4
Battle River G5 - BR5

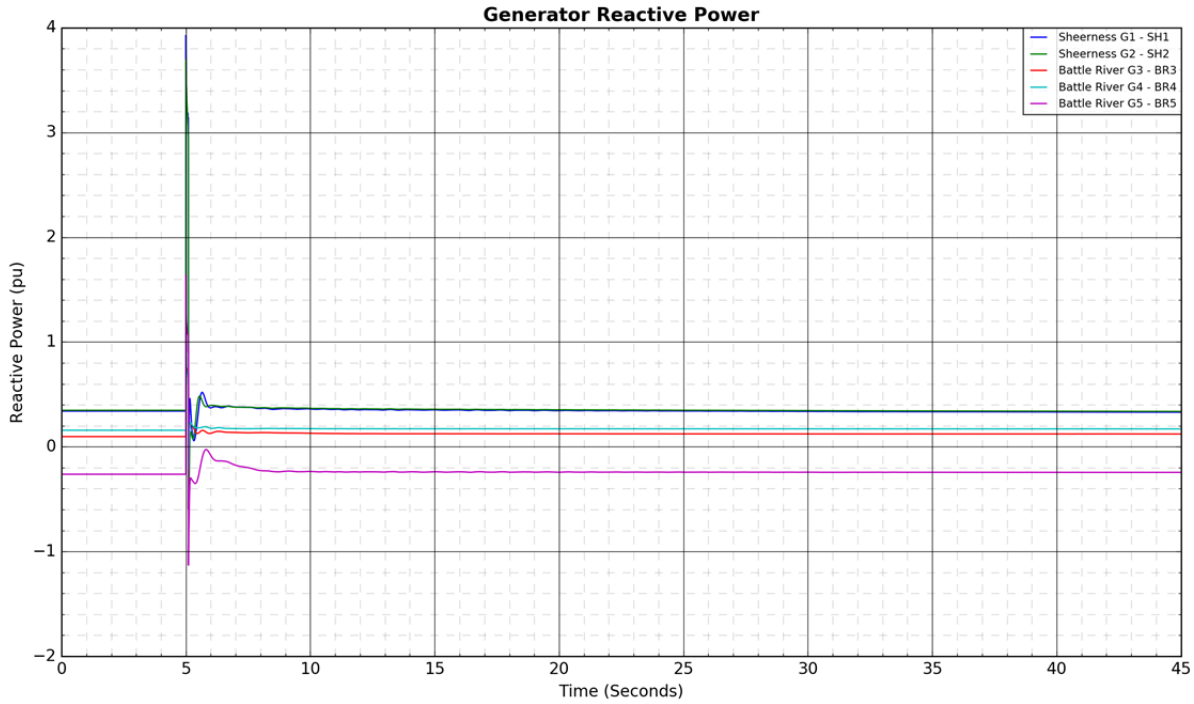
Generator Reactive Power
Sheerness G1 - SH1
Sheerness G2 - SH2
Battle River G3 - BR3
Battle River G4 - BR4
Battle River G5 - BR5
Reactive Power (pu)
Time (Seconds)

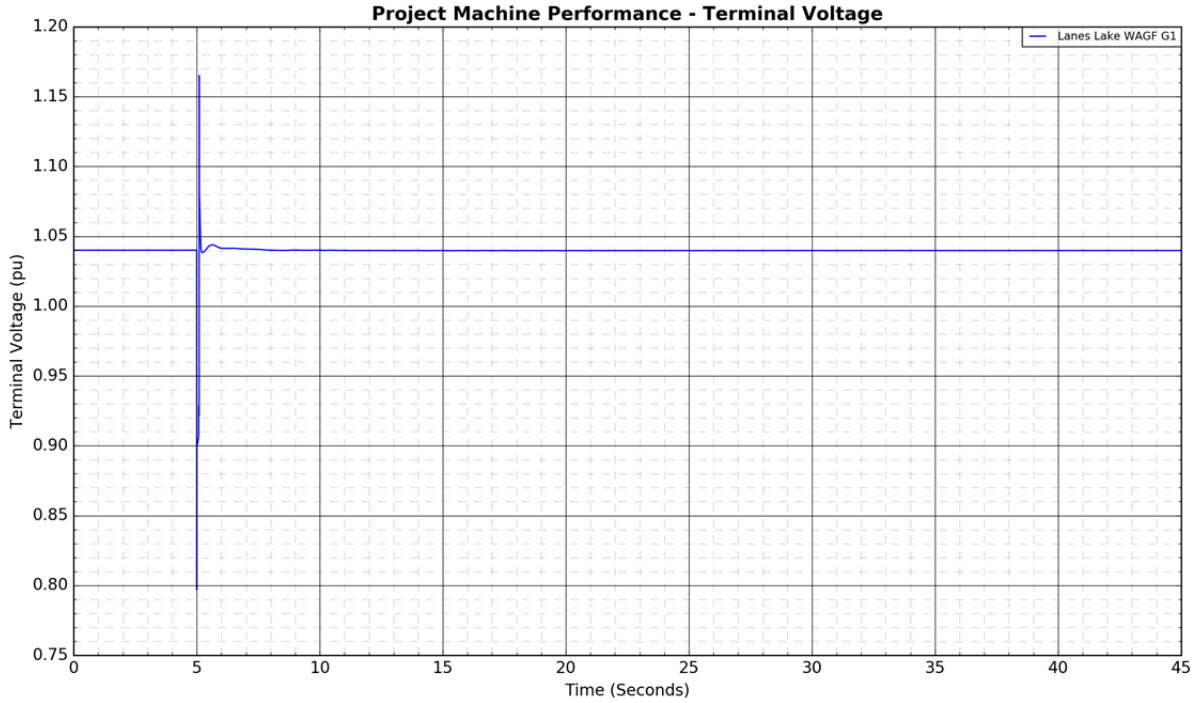
Project Machine Performance - Terminal Voltage
Lanes Lake WAGF G1
Terminal Voltage (pu)
Time (Seconds)


Project Machine Performance - Active Power
Lanes Lake WAGF G1
Active Power (pu)
Time (Seconds)
1.9
1.8
1.7
1.6
1.5
1.4
1.3
1.2
1.1
0
5
10
15
20
25
30
35
40
45

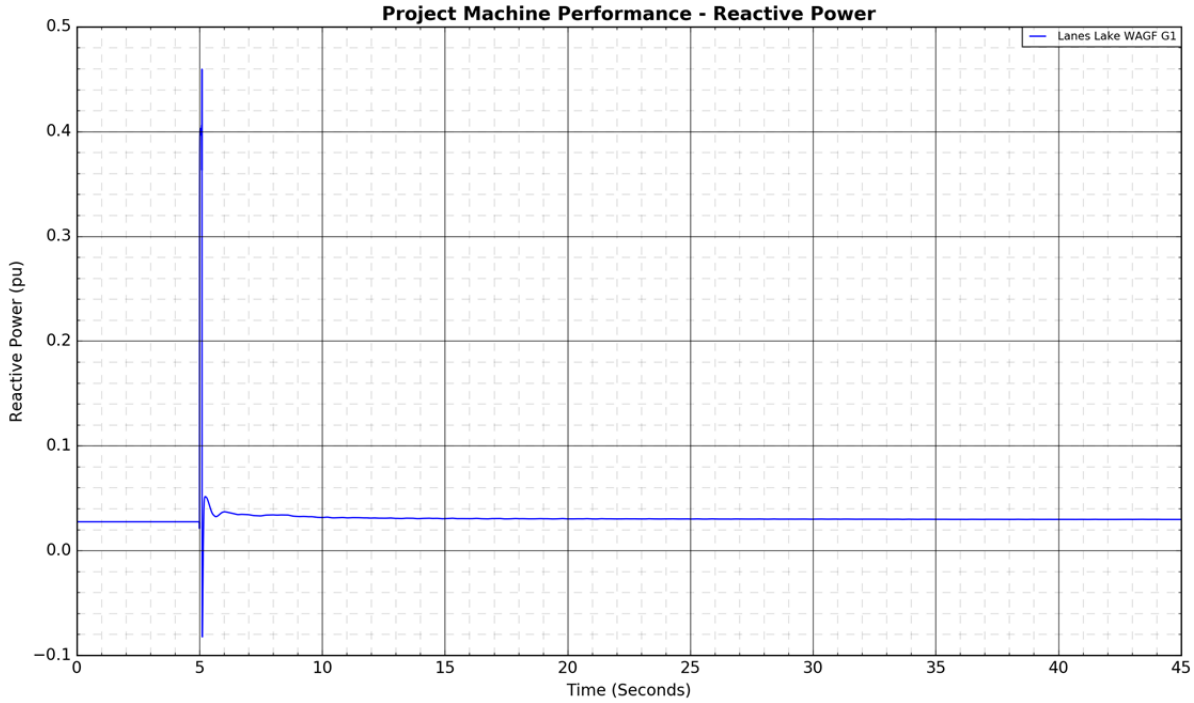
Project Machine Performance - Reactive Power
Lanes Lake WAGF G1
Reactive Power (pu)
Time (Seconds)
0.5
0.4
0.3
0.2
0.1
0.0
−0.1
0
5
10
15
20
25
30
35
40
45


Branch Active Power Flows
9L93 (Pioneer 805S - Halkirk 615S)
9L175 (Pioneer 805S - Tincherbray 972S)
9L16 (Tincherbray 972S - Cordel 755S)
9L59 (Anderson 801S - Tinchebray 972S)
Active Power (MW)
Time (Seconds)

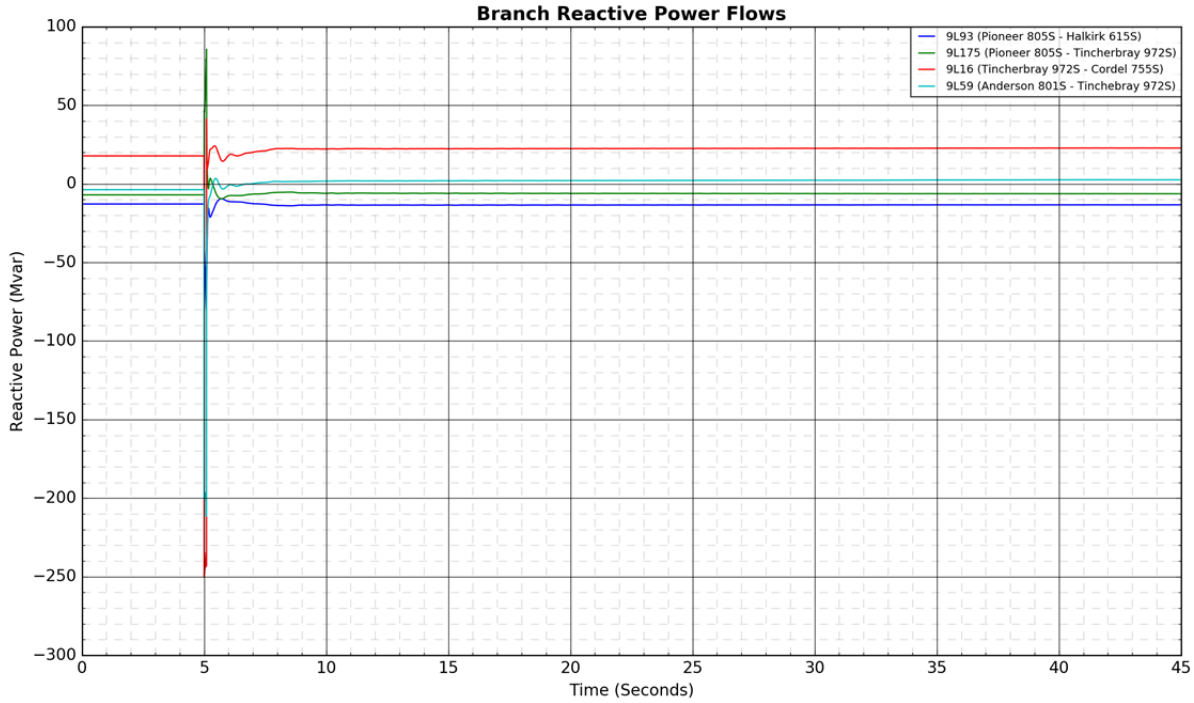
Branch Reactive Power Flows
9L93 (Pioneer 805S - Halkirk 615S)
9L175 (Pioneer 805S - Tincherbray 972S)
9L16 (Tincherbray 972S - Cordel 755S)
9L59 (Anderson 801S - Tinchebray 972S)
Reactive Power (Mvar)
Time (Seconds)

Figure A4-61: 9L20 (Cordel 755S - Nevis 766S): 3-phase fault at Cordel 755S



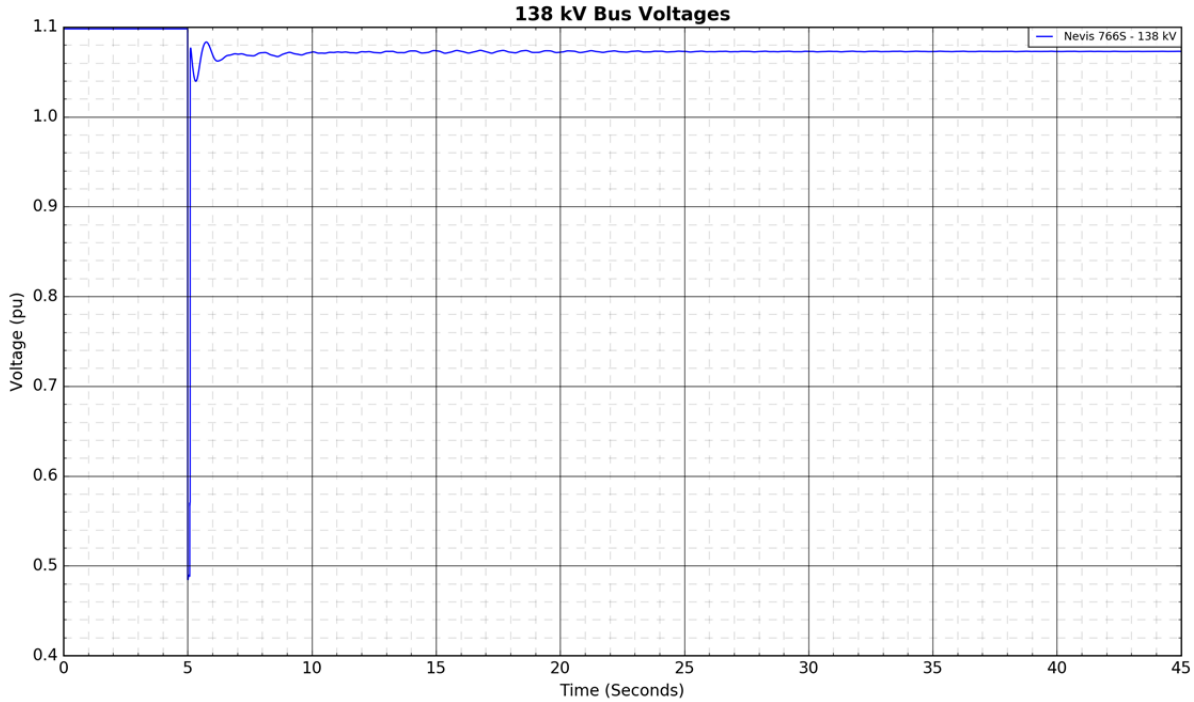

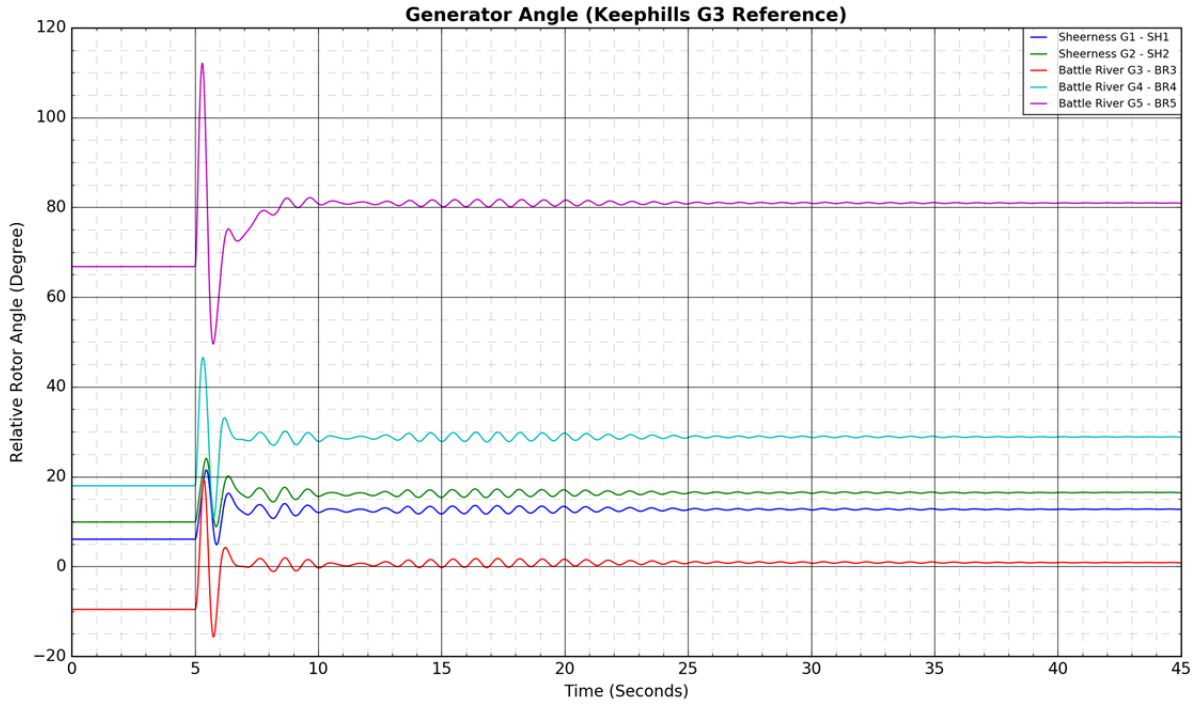
Generator Angle (Keephills G3 Reference)
Relative Rotor Angle (Degree)
Time (Seconds)
Sheerness G1 - SH1
Sheerness G2 - SH2
Battle River G3 - BR3
Battle River G4 - BR4
Battle River G5 - BR5

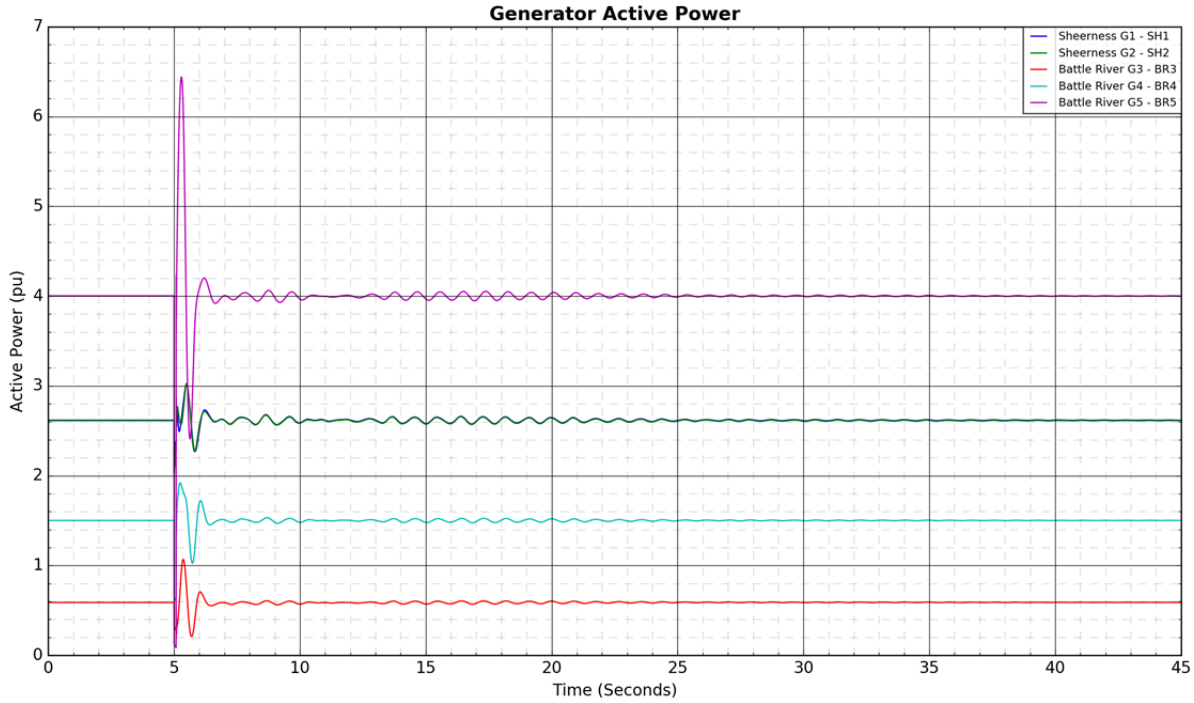
Generator Active Power
Active Power (pu)
Time (Seconds)
Sheerness G1 - SH1
Sheerness G2 - SH2
Battle River G3 - BR3
Battle River G4 - BR4
Battle River G5 - BR5

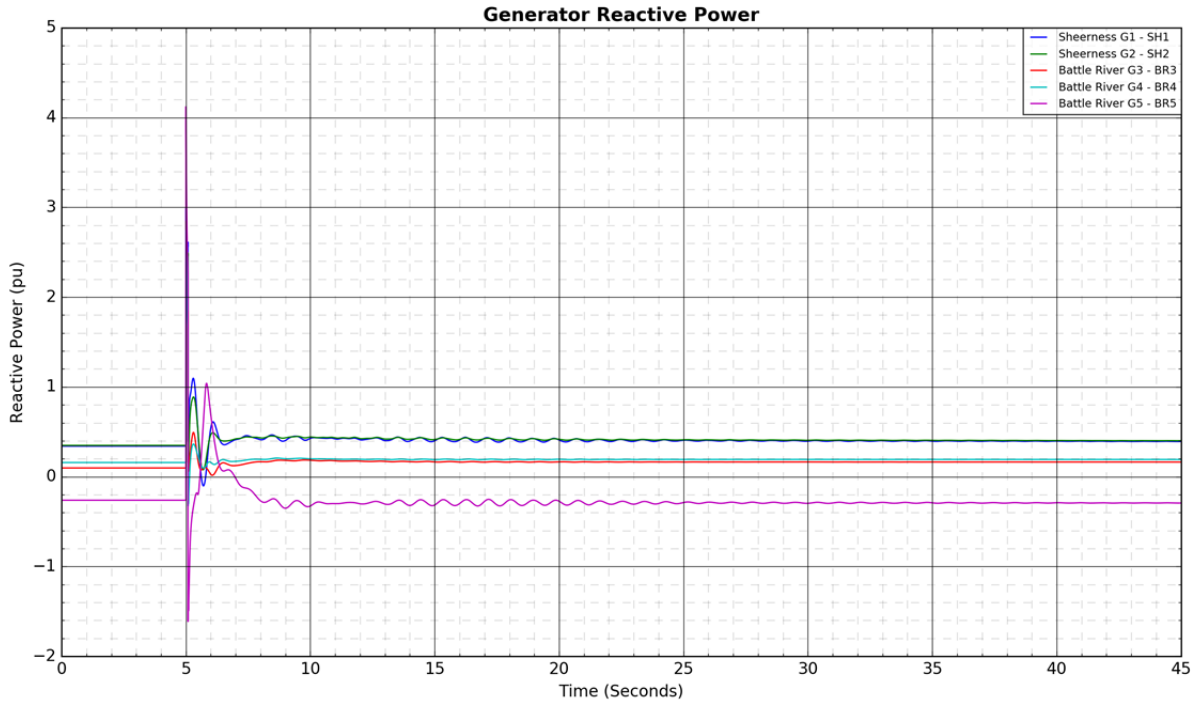
Generator Reactive Power
Sheerness G1 - SH1
Sheerness G2 - SH2
Battle River G3 - BR3
Battle River G4 - BR4
Battle River G5 - BR5
Reactive Power (pu)
Time (Seconds)

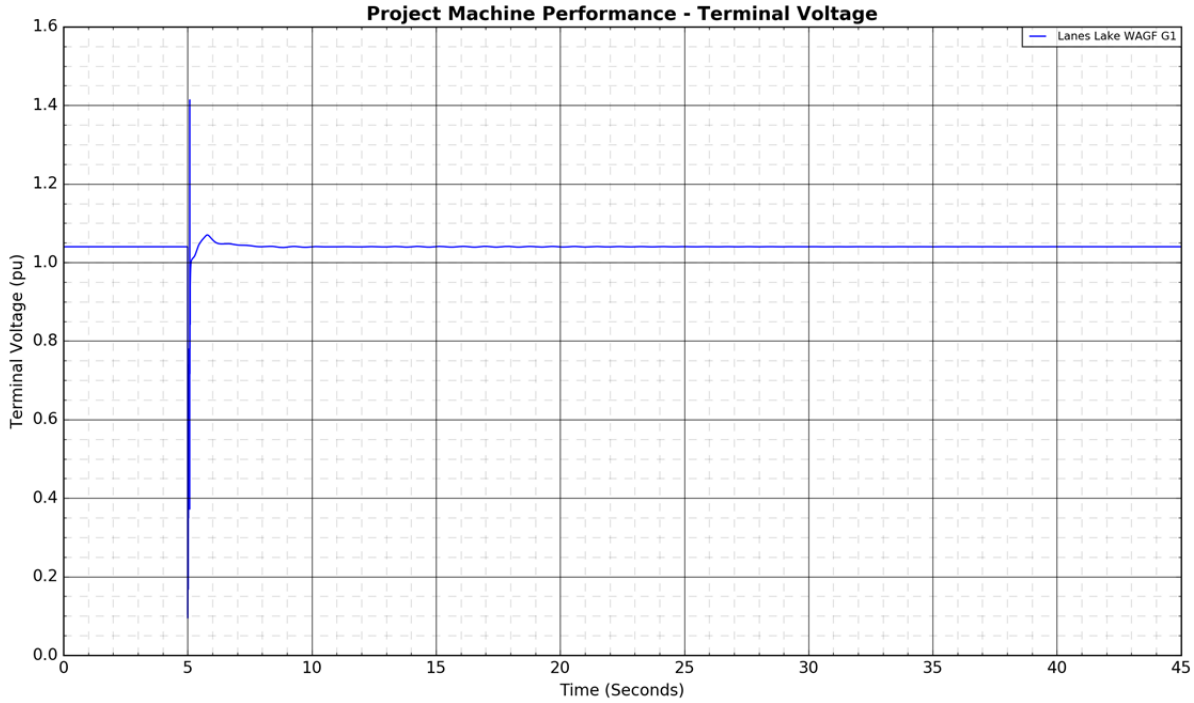
Project Machine Performance - Terminal Voltage
Lanes Lake WAGF G1
Terminal Voltage (pu)
Time (Seconds)


Project Machine Performance - Active Power
Lanes Lake WAGF G1
Active Power (pu)
Time (Seconds)
2.5
2.0
1.5
1.0
0.5
0.0
0
5
10
15
20
25
30
35
40
45

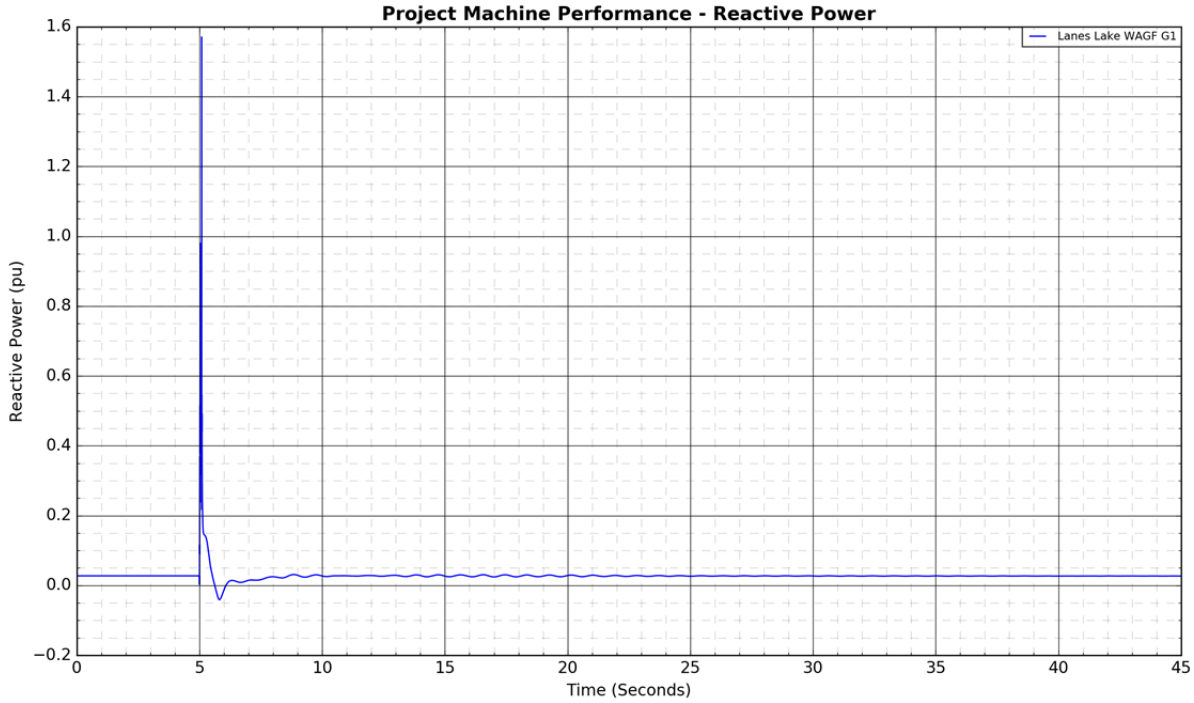
Project Machine Performance - Reactive Power
Lanes Lake WAGF G1
Reactive Power (pu)
Time (Seconds)
1.6
1.4
1.2
1.0
0.8
0.6
0.4
0.2
0.0
−0.2
0
5
10
15
20
25
30
35
40
45

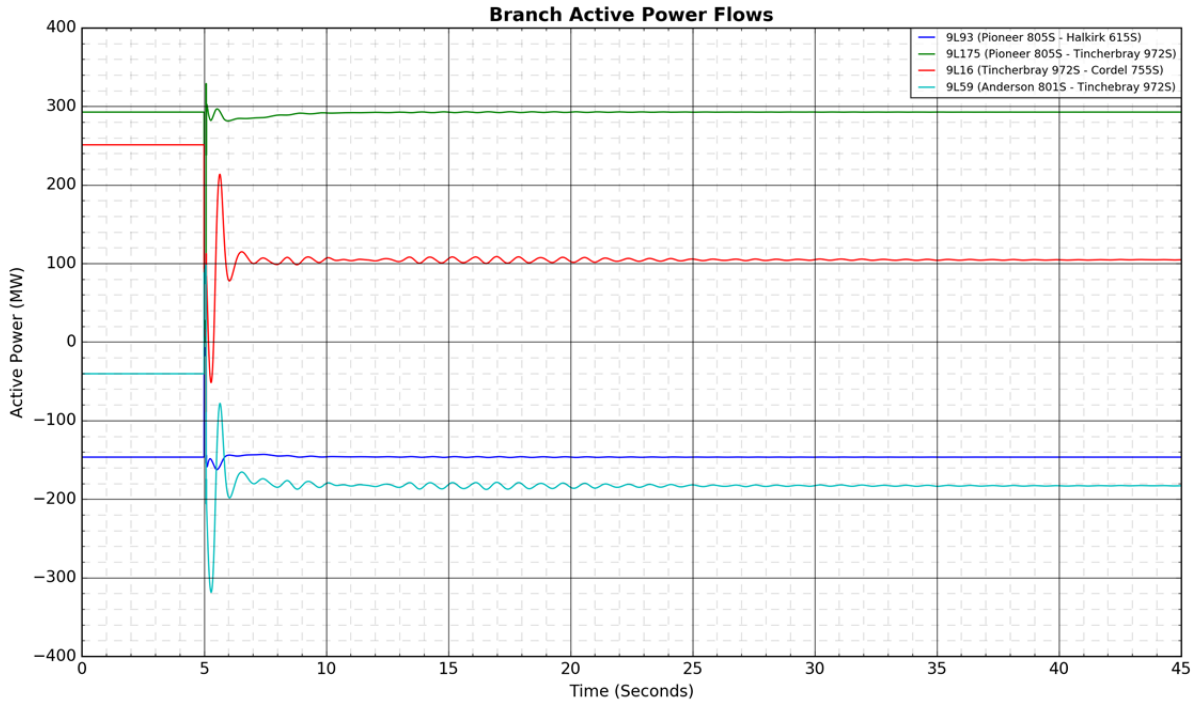
Branch Active Power Flows
9L93 (Pioneer 805S - Halkirk 615S)
9L175 (Pioneer 805S - Tincherbray 972S)
9L16 (Tincherbray 972S - Cordel 755S)
9L59 (Anderson 801S - Tinchebray 972S)
Active Power (MW)
Time (Seconds)

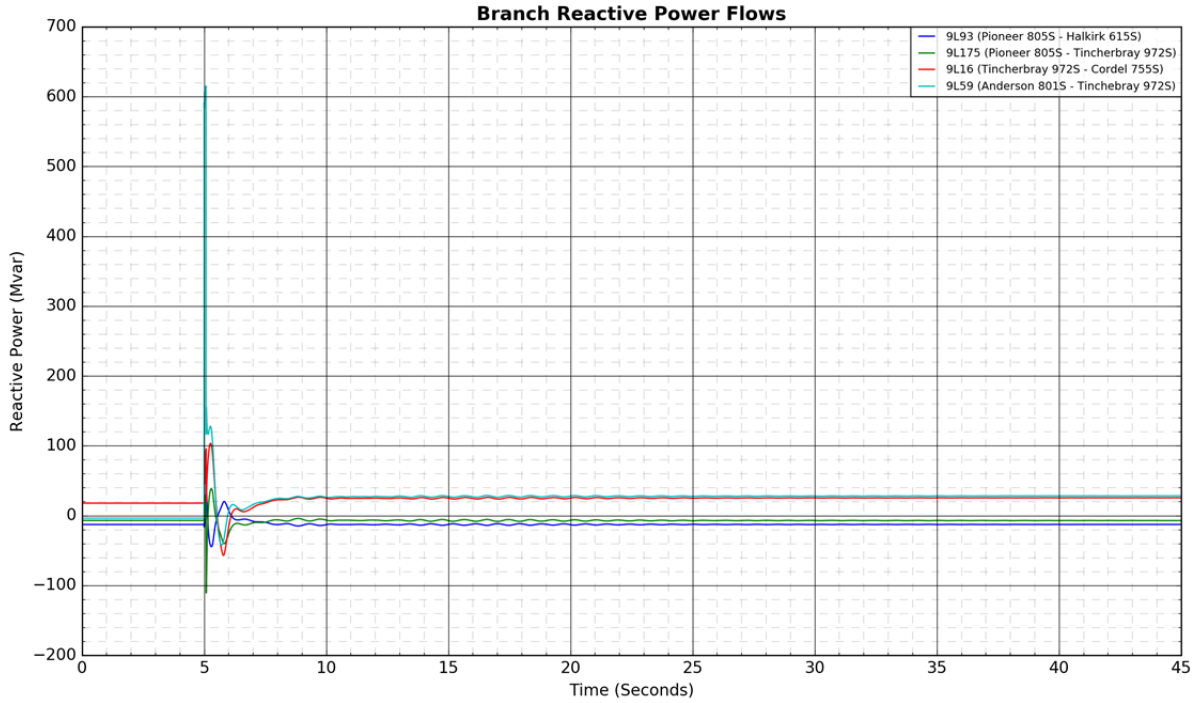
Branch Reactive Power Flows
9L93 (Pioneer 805S - Halkirk 615S)
9L175 (Pioneer 805S - Tincherbray 972S)
9L16 (Tincherbray 972S - Cordel 755S)
9L59 (Anderson 801S - Tinchebray 972S)
Reactive Power (Mvar)
Time (Seconds)

Figure A4-62: 9L20 (Cordel 755S - Nevis 766S): 3-phase fault at Nevis 766S

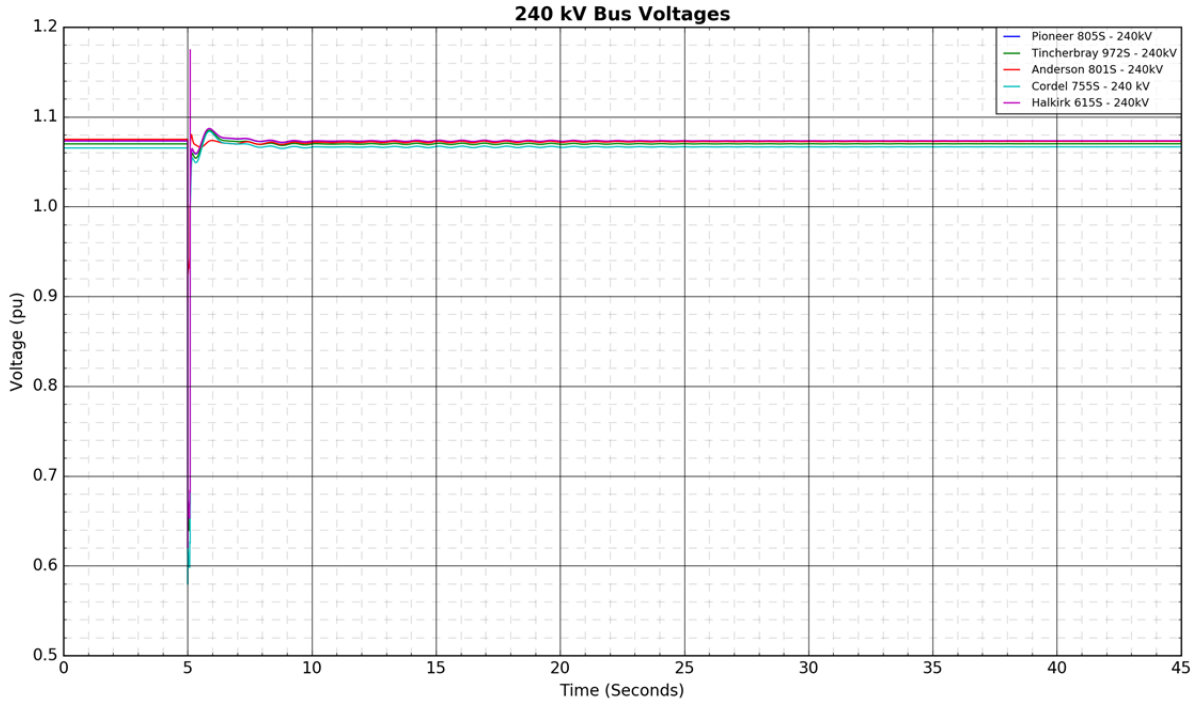

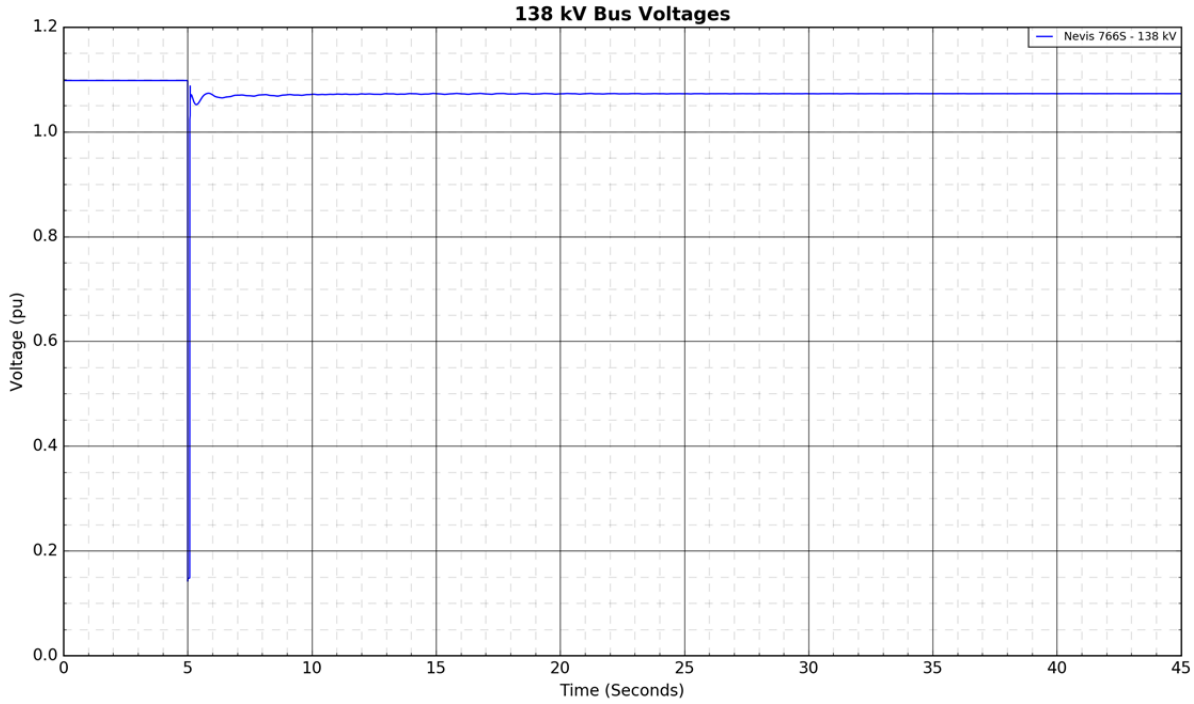

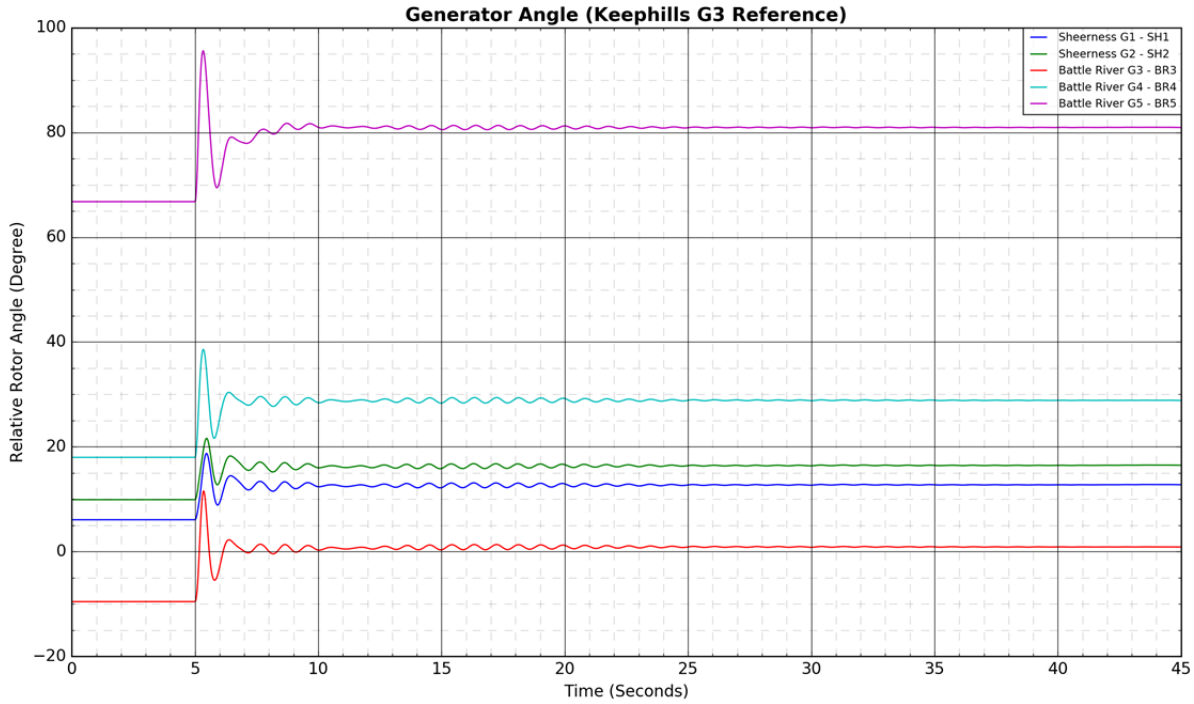
Generator Angle (Keephills G3 Reference)
Relative Rotor Angle (Degree)
Time (Seconds)
Sheerness G1 - SH1
Sheerness G2 - SH2
Battle River G3 - BR3
Battle River G4 - BR4
Battle River G5 - BR5

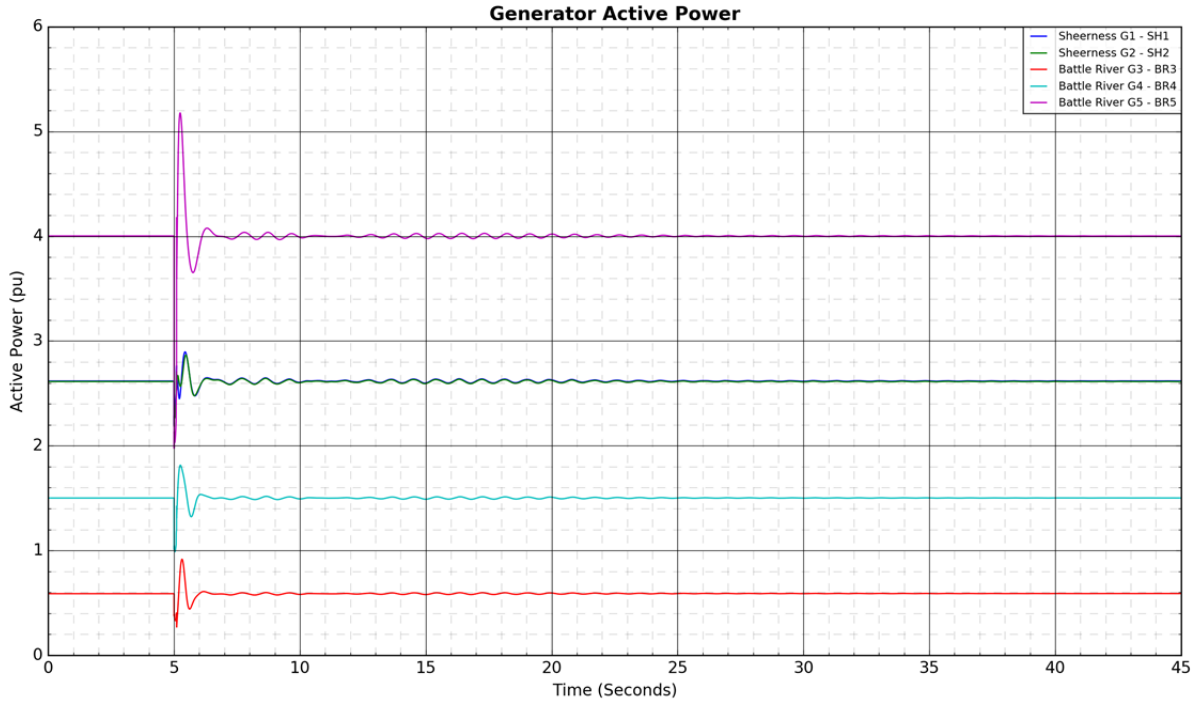
Generator Active Power
Active Power (pu)
Time (Seconds)
Sheerness G1 - SH1
Sheerness G2 - SH2
Battle River G3 - BR3
Battle River G4 - BR4
Battle River G5 - BR5

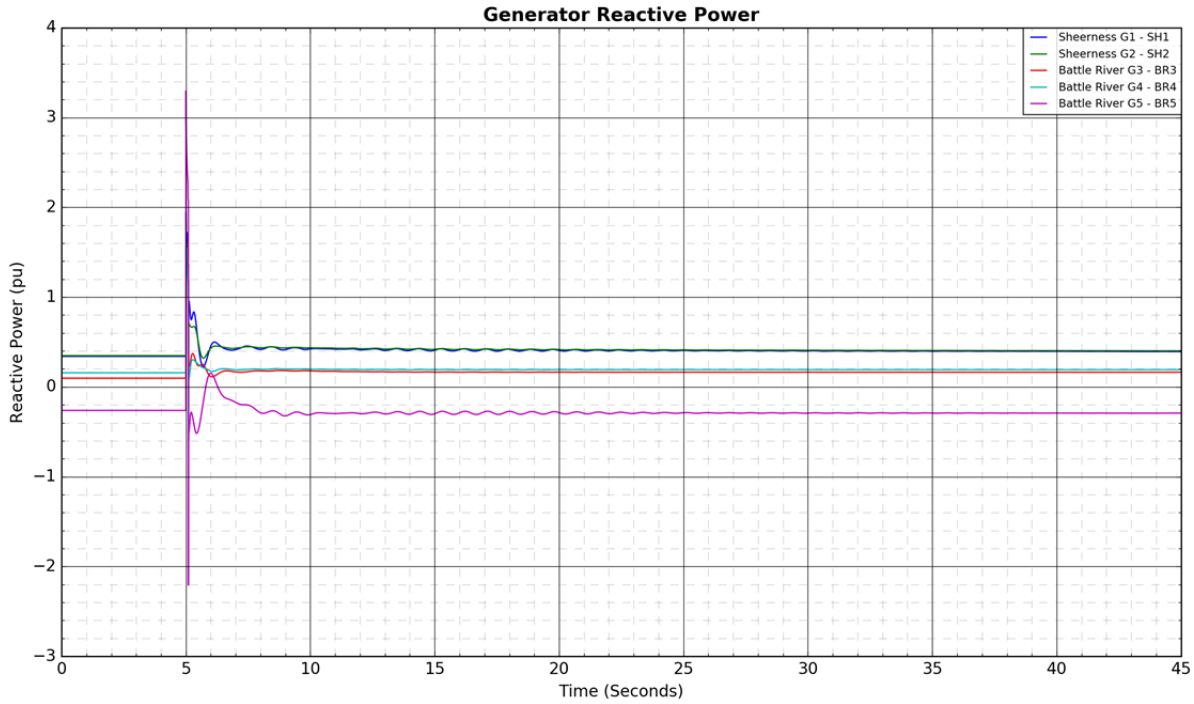
Generator Reactive Power
Sheerness G1 - SH1
Sheerness G2 - SH2
Battle River G3 - BR3
Battle River G4 - BR4
Battle River G5 - BR5
Reactive Power (pu)
Time (Seconds)

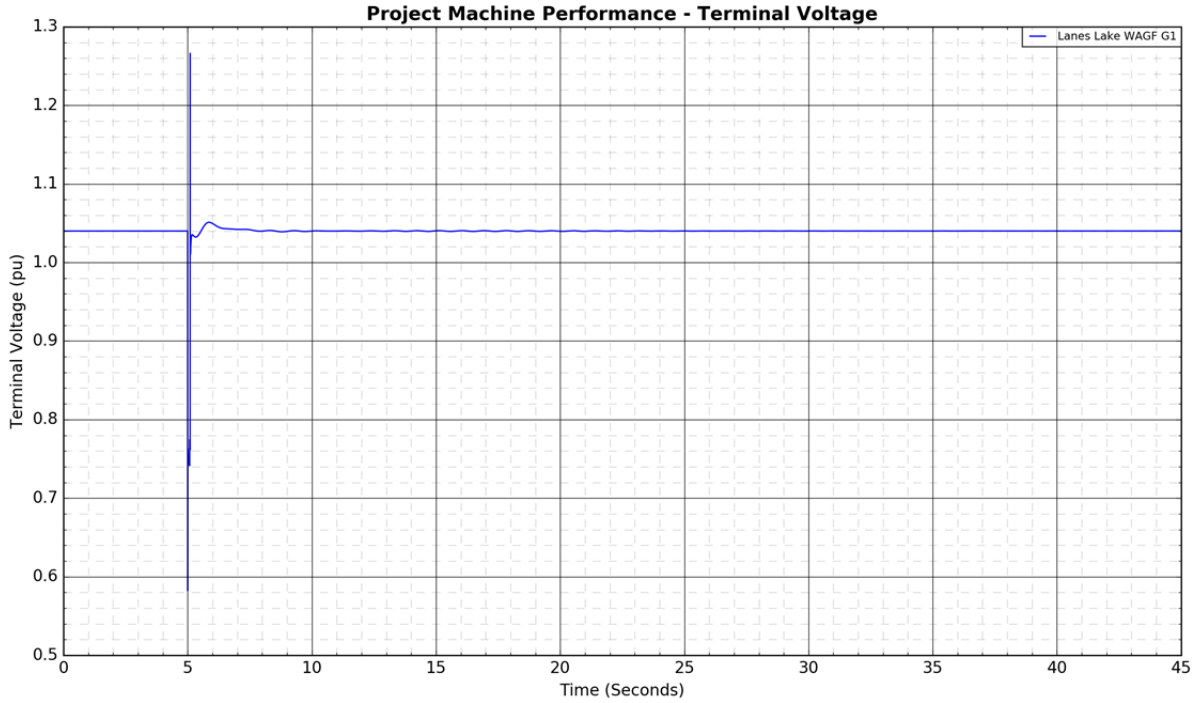
Project Machine Performance - Terminal Voltage
Lanes Lake WAGF G1
Terminal Voltage (pu)
Time (Seconds)


Project Machine Performance - Active Power
Lanes Lake WAGF G1
Active Power (pu)
Time (Seconds)
2.6
2.4
2.2
2.0
1.8
1.6
1.4
1.2
1.0
0.8
0
5
10
15
20
25
30
35
40
45

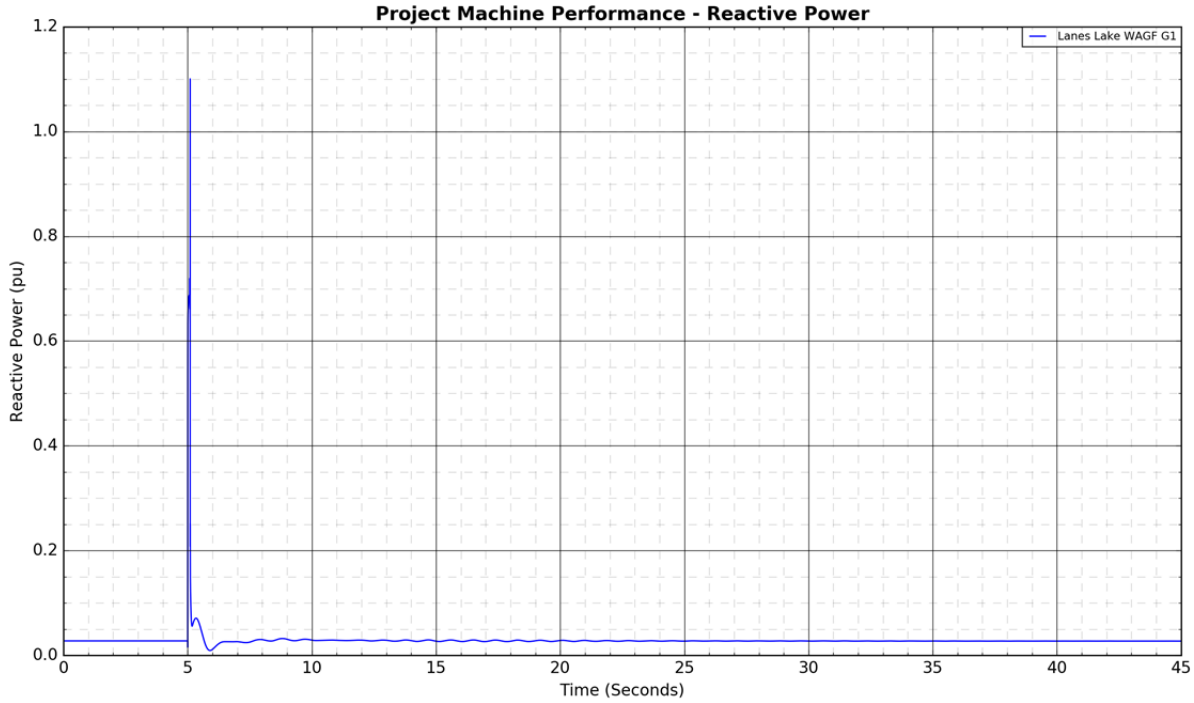
Project Machine Performance - Reactive Power
Lanes Lake WAGF G1
Reactive Power (pu)
Time (Seconds)
1.2
1.0
0.8
0.6
0.4
0.2
0.0
0
5
10
15
20
25
30
35
40
45


Branch Active Power Flows
9L93 (Pioneer 805S - Halkirk 615S)
9L175 (Pioneer 805S - Tincherbray 972S)
9L16 (Tincherbray 972S - Cordel 755S)
9L59 (Anderson 801S - Tinchebray 972S)
Active Power (MW)
Time (Seconds)

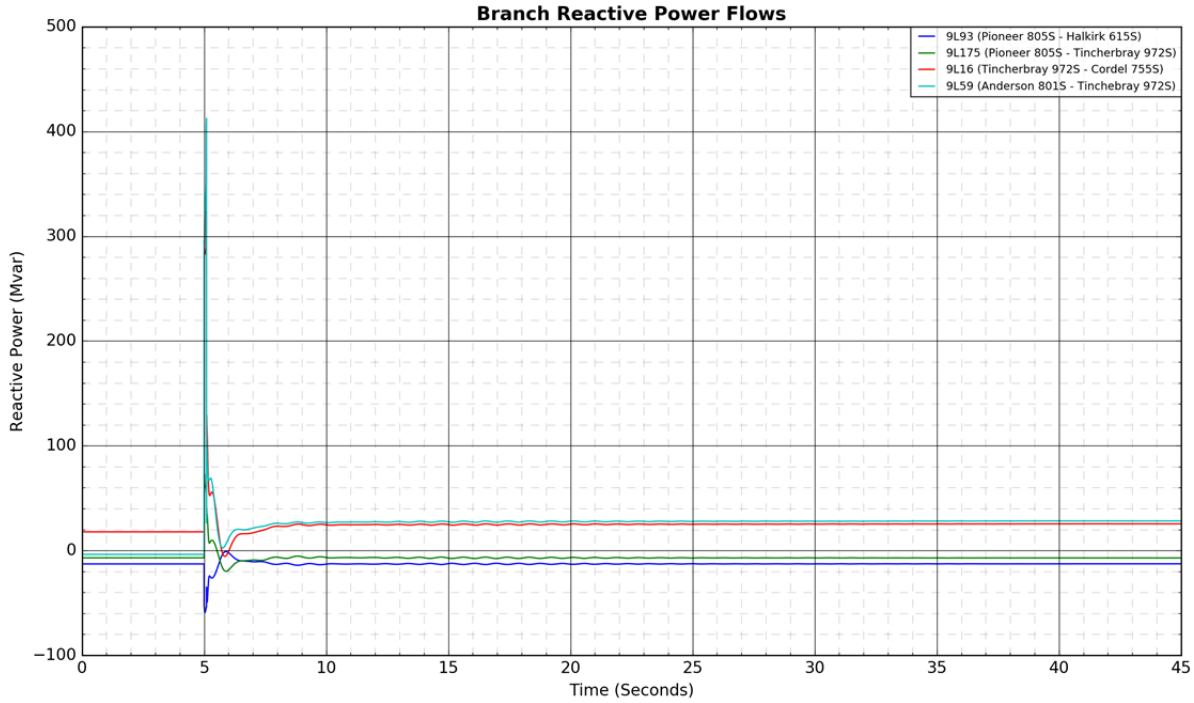
Branch Reactive Power Flows
9L93 (Pioneer 805S - Halkirk 615S)
9L175 (Pioneer 805S - Tincherbray 972S)
9L16 (Tincherbray 972S - Cordel 755S)
9L59 (Anderson 801S - Tinchebray 972S)
Reactive Power (Mvar)
Time (Seconds)

Figure A4-63: 9L16 (Tinchebray 972S - Cordel 755S): 3-phase fault at Cordel 755S

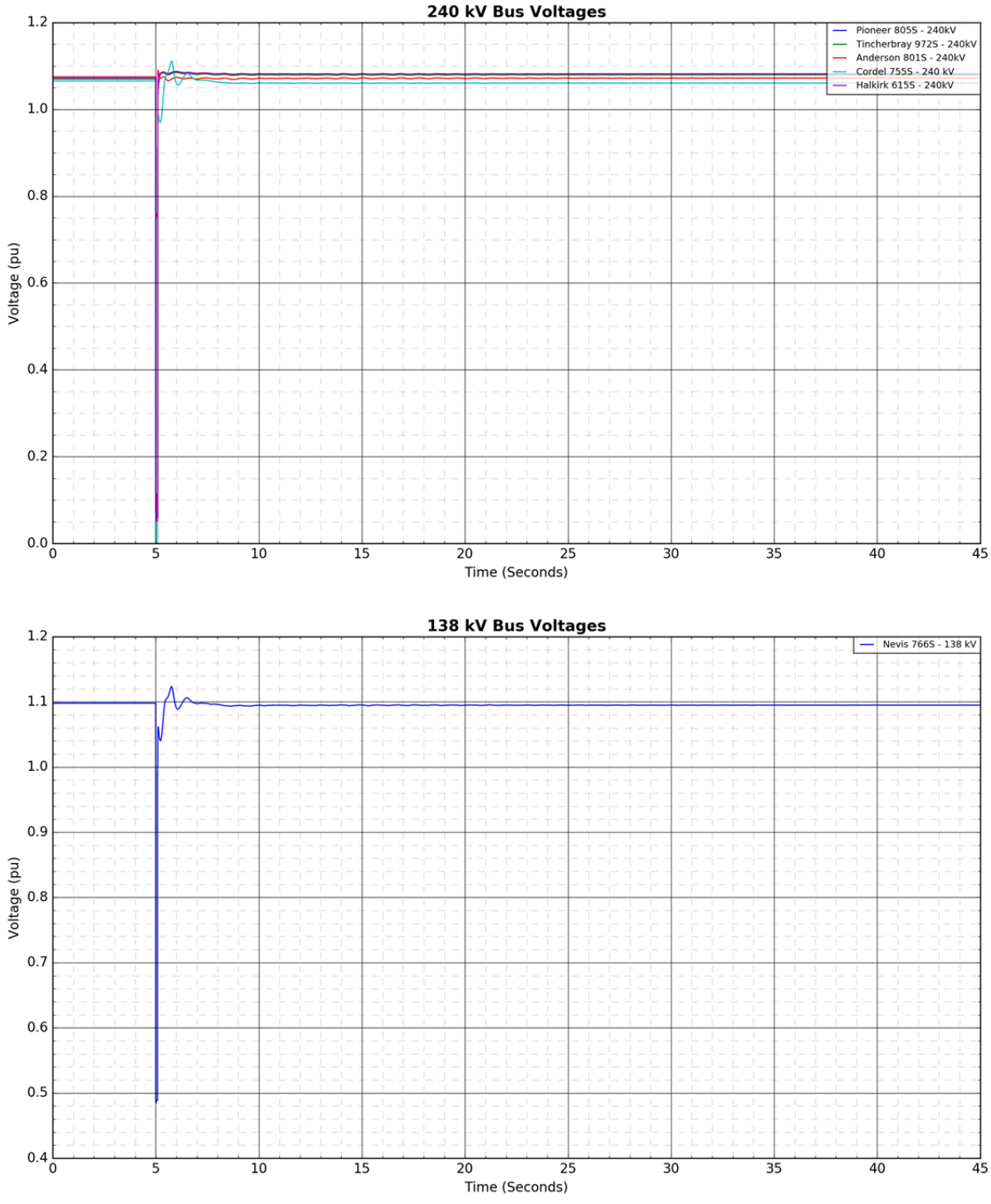

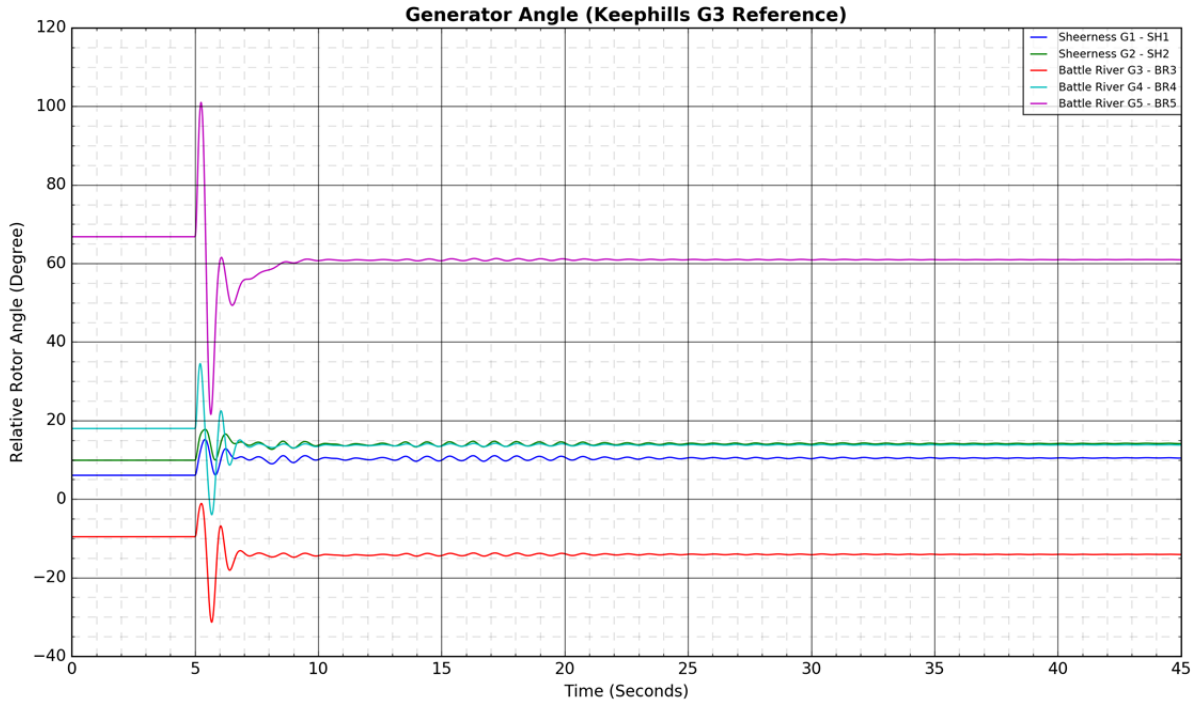
Generator Angle (Keephills G3 Reference)
Relative Rotor Angle (Degree)
Time (Seconds)
Sheerness G1 - SH1
Sheerness G2 - SH2
Battle River G3 - BR3
Battle River G4 - BR4
Battle River G5 - BR5

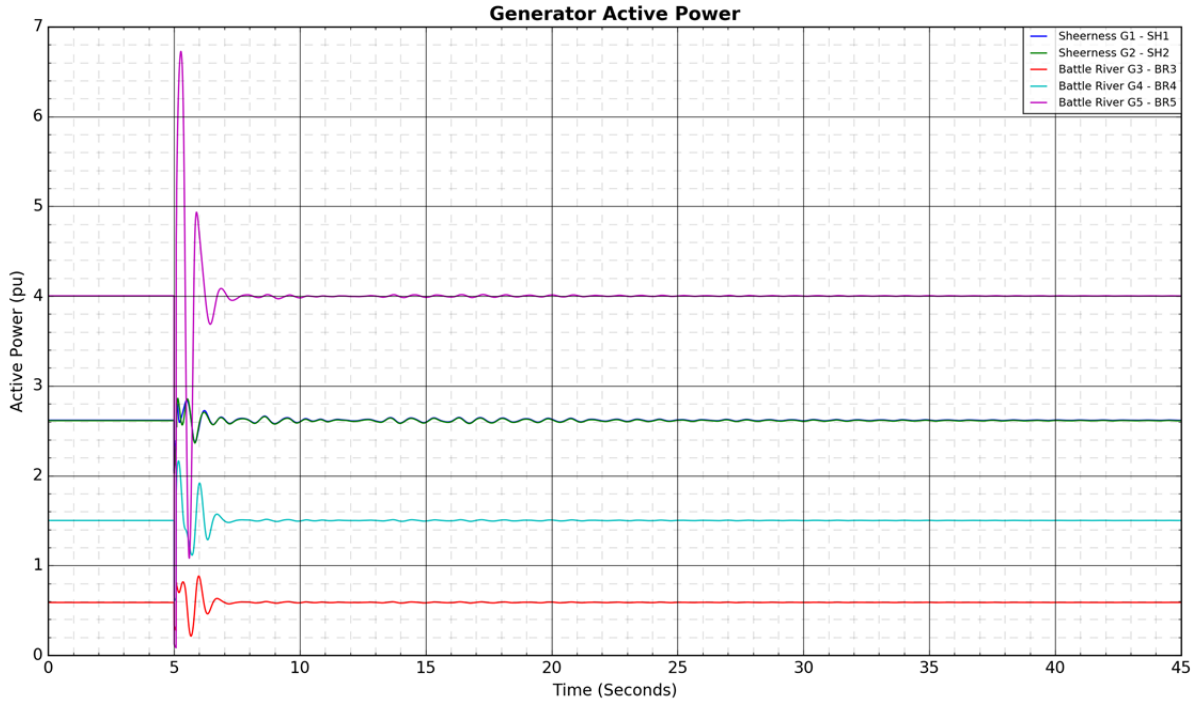
Generator Active Power
Active Power (pu)
Time (Seconds)
Sheerness G1 - SH1
Sheerness G2 - SH2
Battle River G3 - BR3
Battle River G4 - BR4
Battle River G5 - BR5

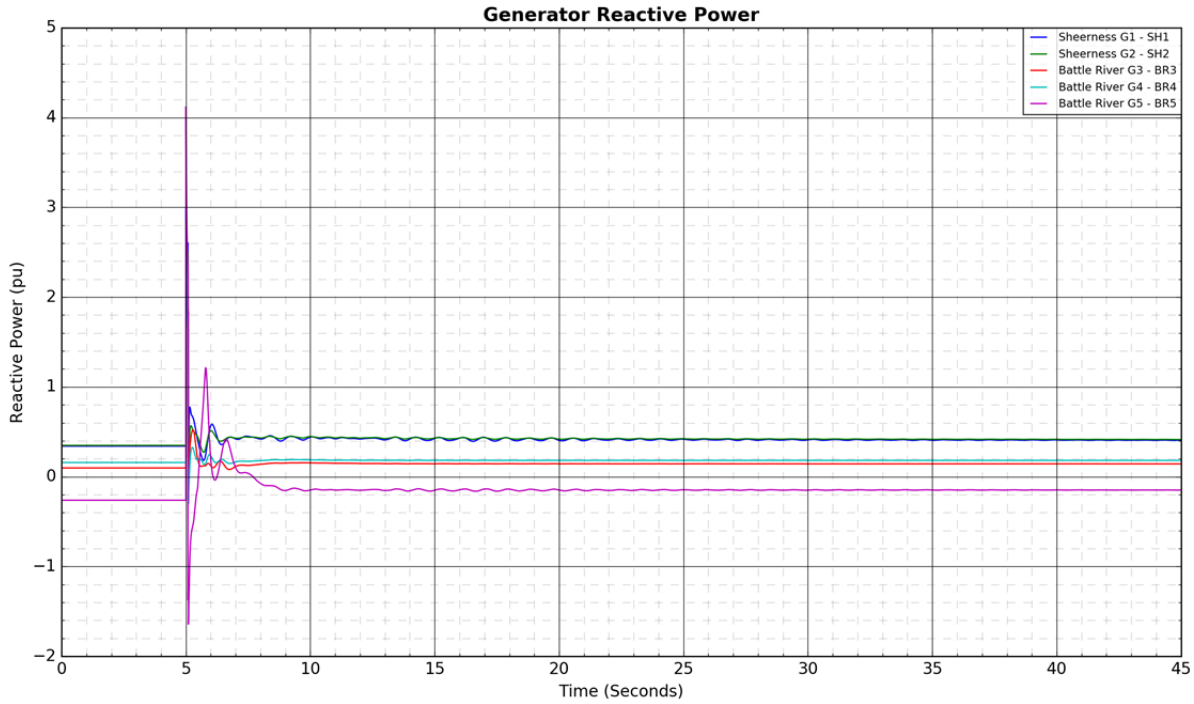
Generator Reactive Power
Sheerness G1 - SH1
Sheerness G2 - SH2
Battle River G3 - BR3
Battle River G4 - BR4
Battle River G5 - BR5
Reactive Power (pu)
Time (Seconds)

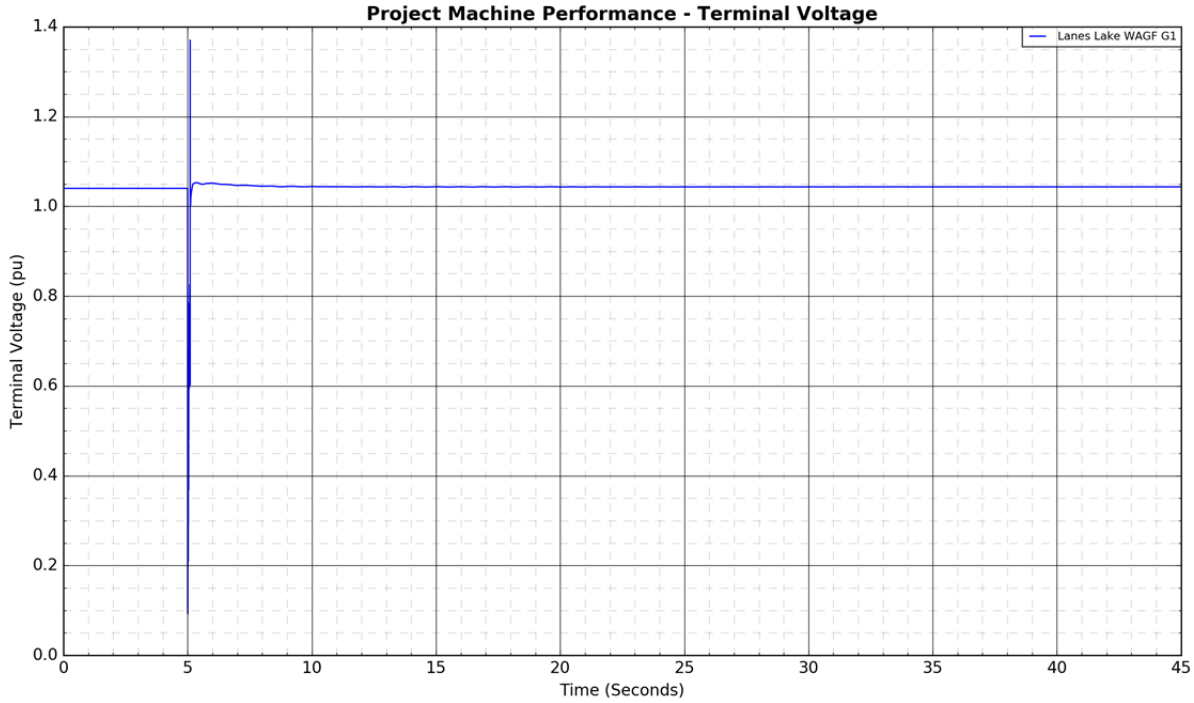
Project Machine Performance - Terminal Voltage
Lanes Lake WAGF G1
Terminal Voltage (pu)
Time (Seconds)


Project Machine Performance - Active Power
Lanes Lake WAGF G1
Active Power (pu)
Time (Seconds)
2.5
2.0
1.5
1.0
0.5
0.0
0
5
10
15
20
25
30
35
40
45

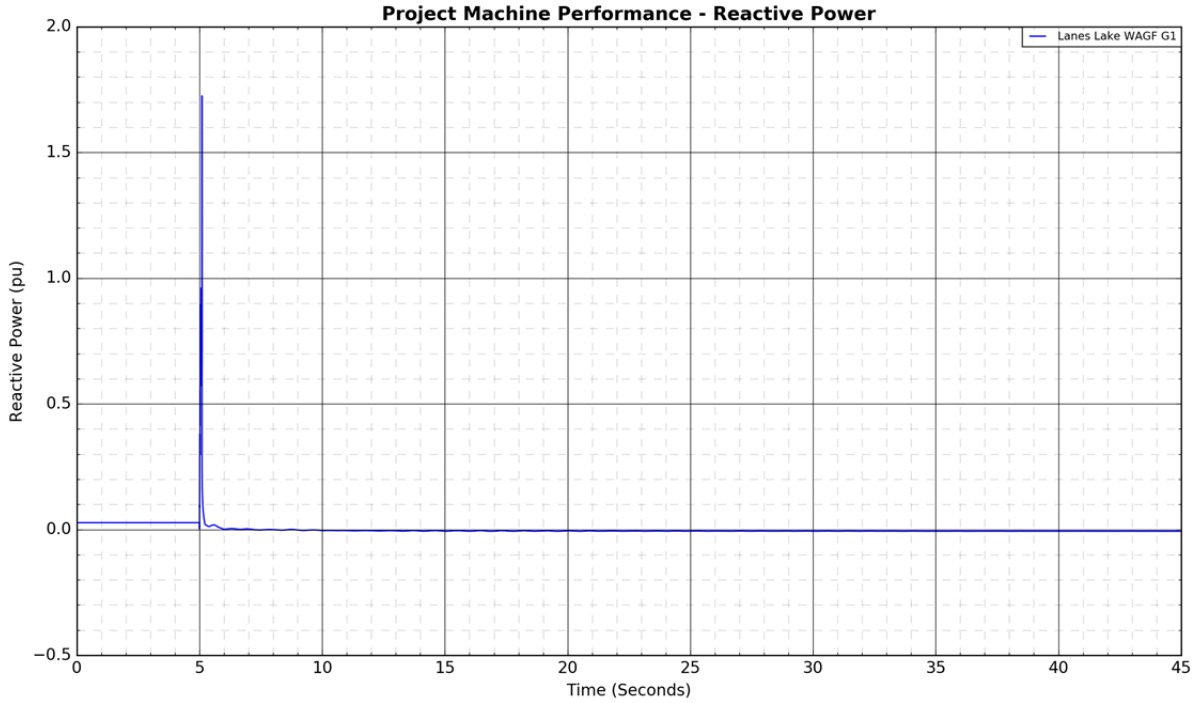
Project Machine Performance - Reactive Power
Lanes Lake WAGF G1
Reactive Power (pu)
Time (Seconds)
2.0
1.5
1.0
0.5
0.0
−0.5
0
5
10
15
20
25
30
35
40
45

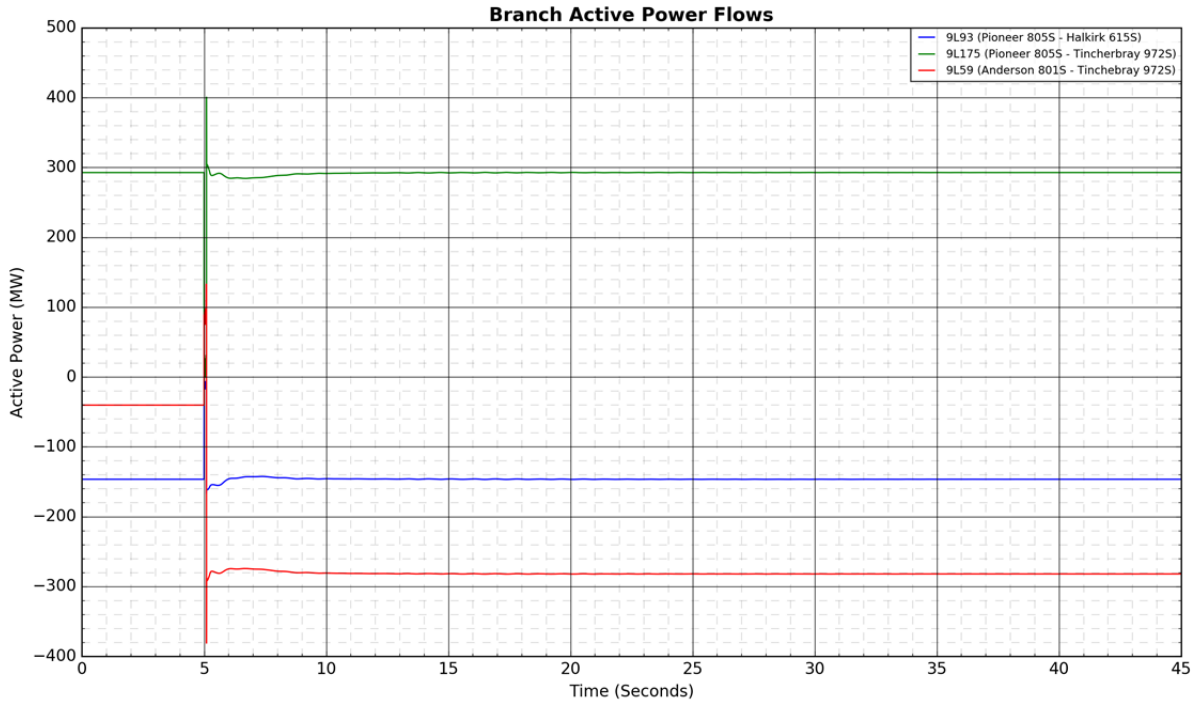
Branch Active Power Flows
9L93 (Pioneer 805S - Halkirk 615S)
9L175 (Pioneer 805S - Tincherbray 972S)
9L59 (Anderson 801S - Tinchebray 972S)
Active Power (MW)
Time (Seconds)

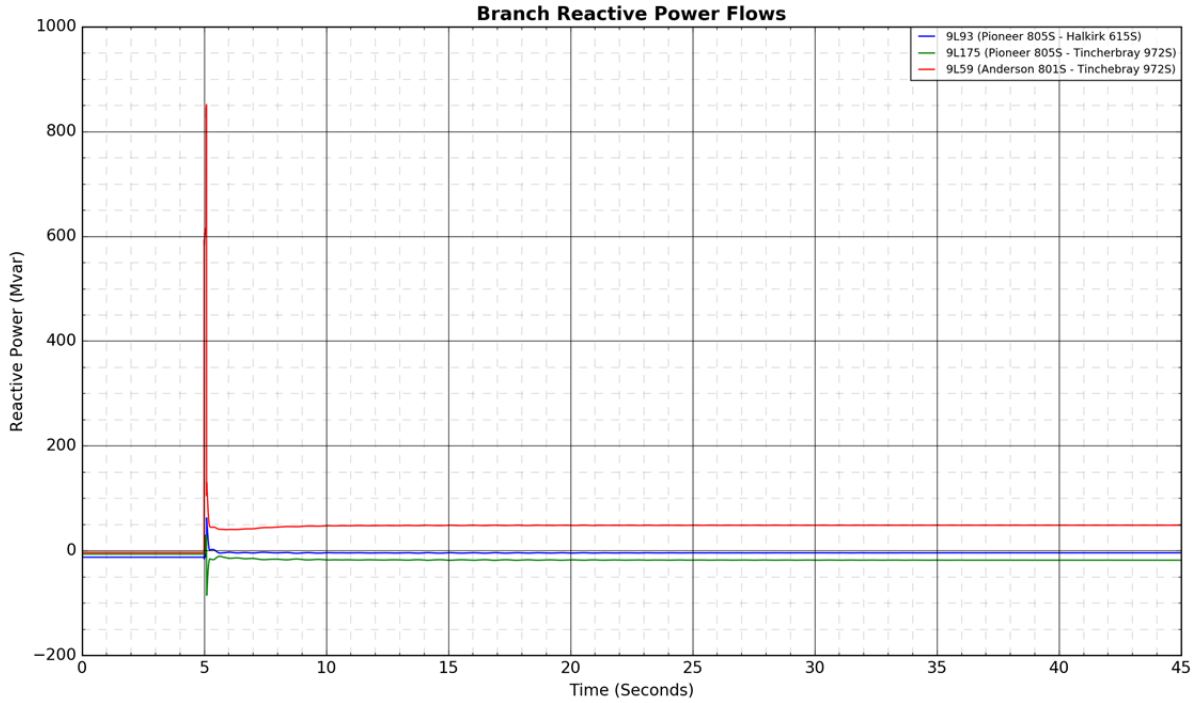
Branch Reactive Power Flows
9L93 (Pioneer 805S - Halkirk 615S)
9L175 (Pioneer 805S - Tincherbray 972S)
9L59 (Anderson 801S - Tinchebray 972S)
Reactive Power (Mvar)
Time (Seconds)

Figure A4-64: 9L16 (Tinchebray 972S - Cordel 755S): 3-phase fault at Tinchebray 972S

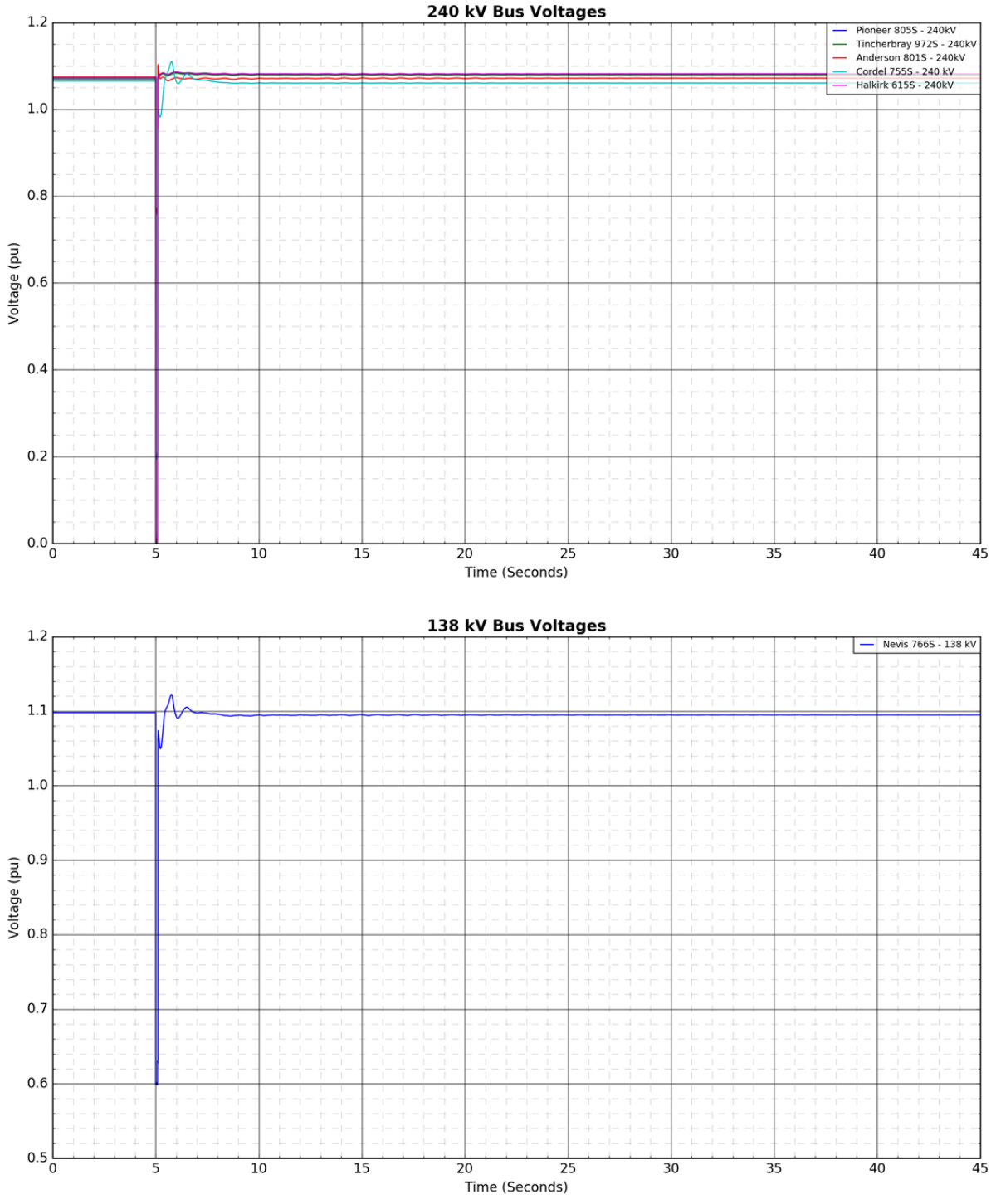

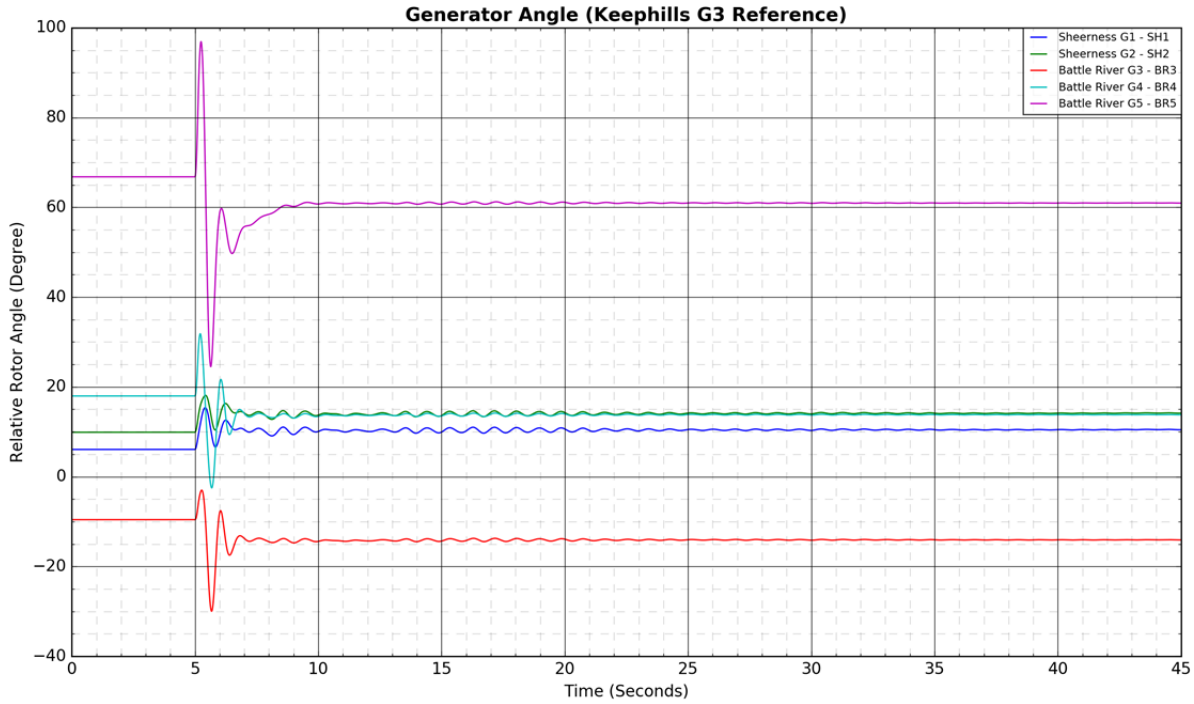
Generator Angle (Keephills G3 Reference)
Relative Rotor Angle (Degree)
Time (Seconds)
Sheerness G1 - SH1
Sheerness G2 - SH2
Battle River G3 - BR3
Battle River G4 - BR4
Battle River G5 - BR5

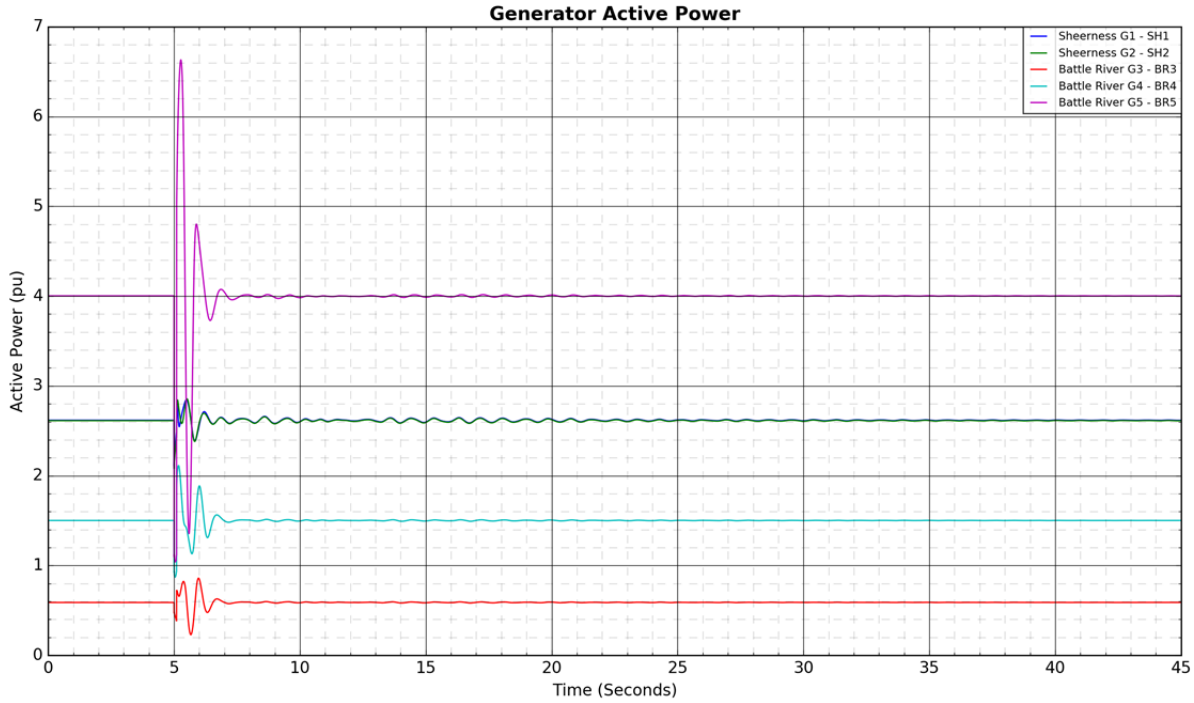
Generator Active Power
Active Power (pu)
Time (Seconds)
Sheerness G1 - SH1
Sheerness G2 - SH2
Battle River G3 - BR3
Battle River G4 - BR4
Battle River G5 - BR5

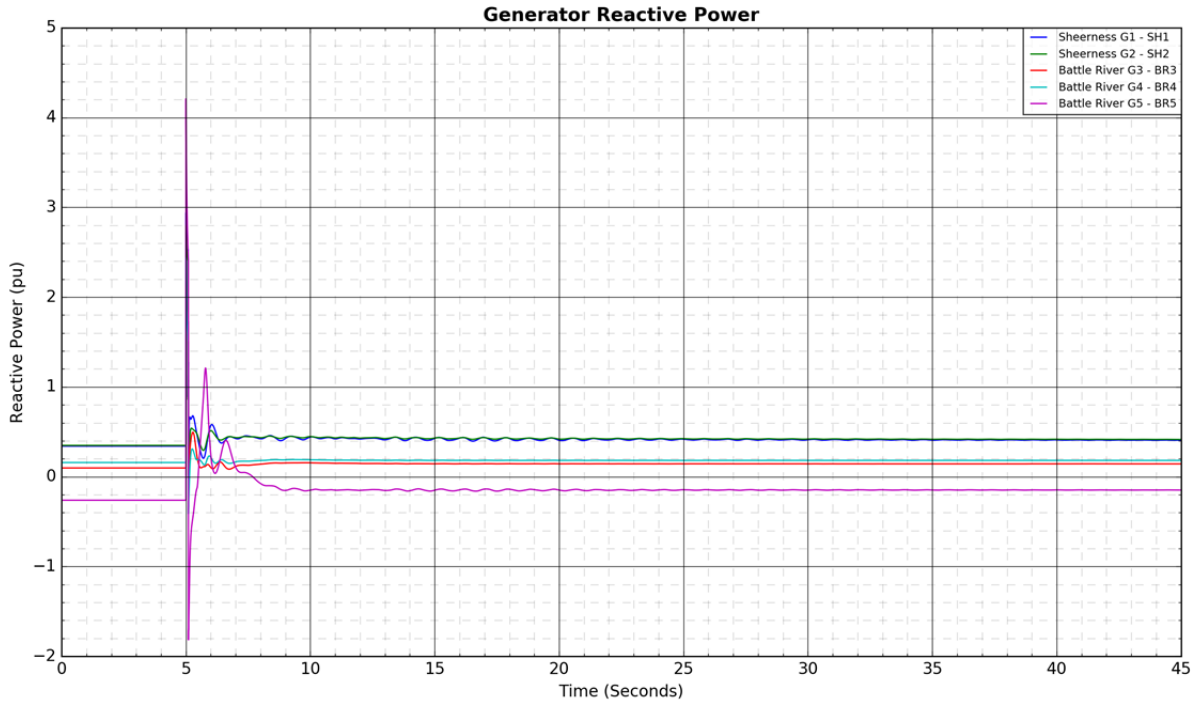
Generator Reactive Power
Sheerness G1 - SH1
Sheerness G2 - SH2
Battle River G3 - BR3
Battle River G4 - BR4
Battle River G5 - BR5
Reactive Power (pu)
Time (Seconds)

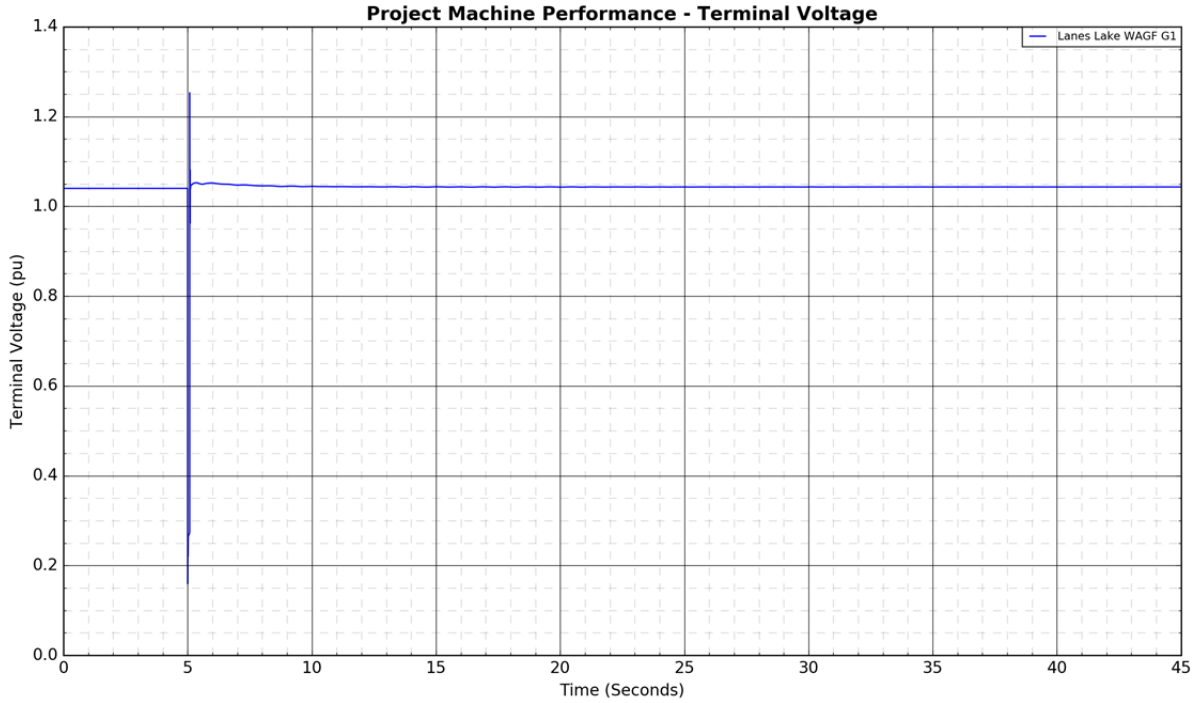
Project Machine Performance - Terminal Voltage
Lanes Lake WAGF G1
Terminal Voltage (pu)
Time (Seconds)

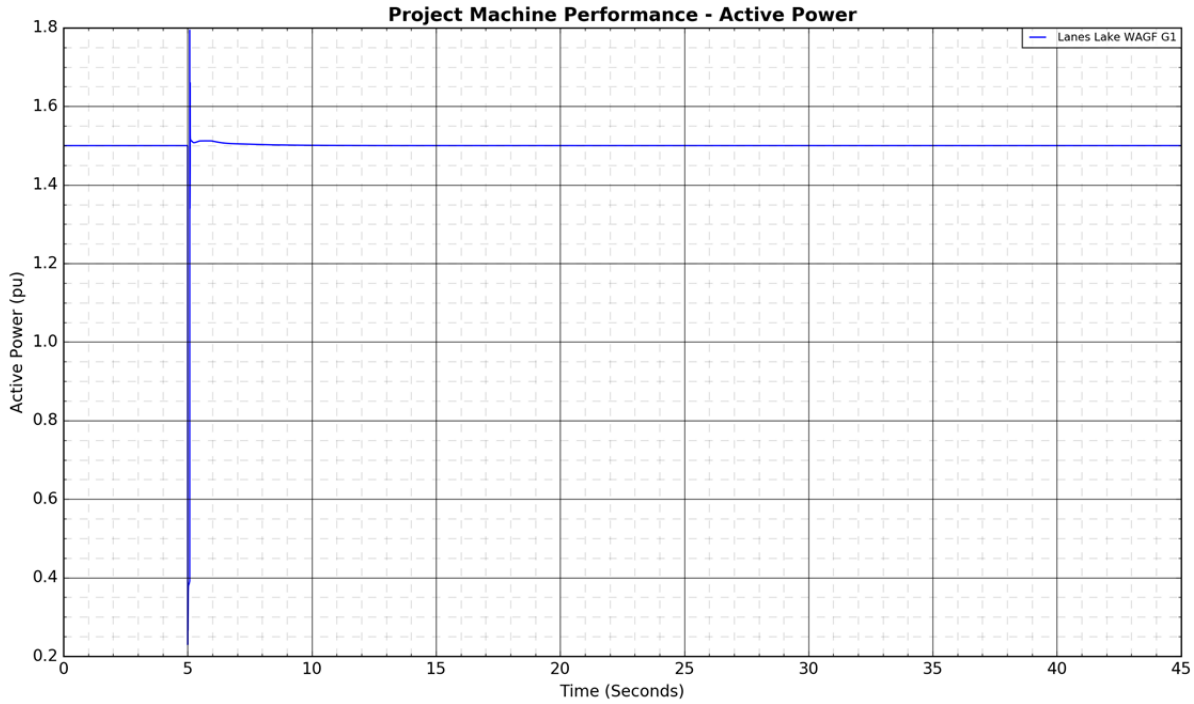
Project Machine Performance - Active Power
Lanes Lake WAGF G1
Active Power (pu)
Time (Seconds)
1.8
1.6
1.4
1.2
1.0
0.8
0.6
0.4
0.2
0
5
10
15
20
25
30
35
40
45

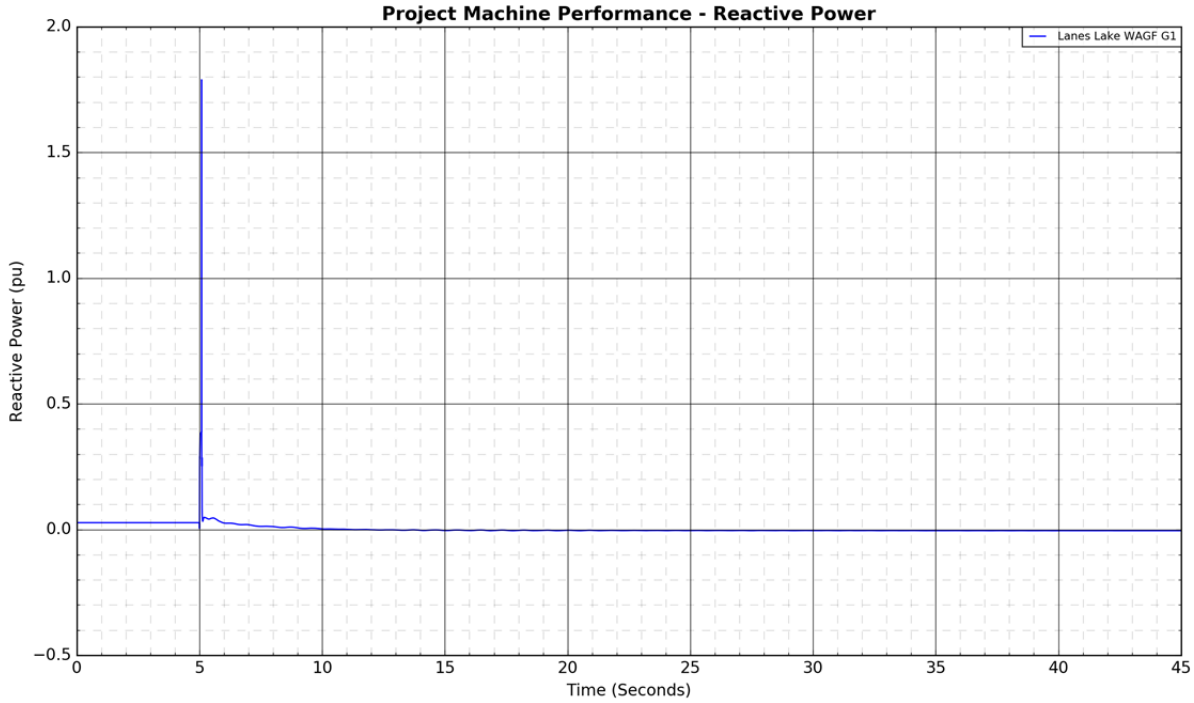
Project Machine Performance - Reactive Power
Lanes Lake WAGF G1
Reactive Power (pu)
Time (Seconds)
2.0
1.5
1.0
0.5
0.0
−0.5
0
5
10
15
20
25
30
35
40
45


Branch Active Power Flows
9L93 (Pioneer 805S - Halkirk 615S)
9L175 (Pioneer 805S - Tincherbray 972S)
9L59 (Anderson 801S - Tinchebray 972S)
Active Power (MW)
Time (Seconds)

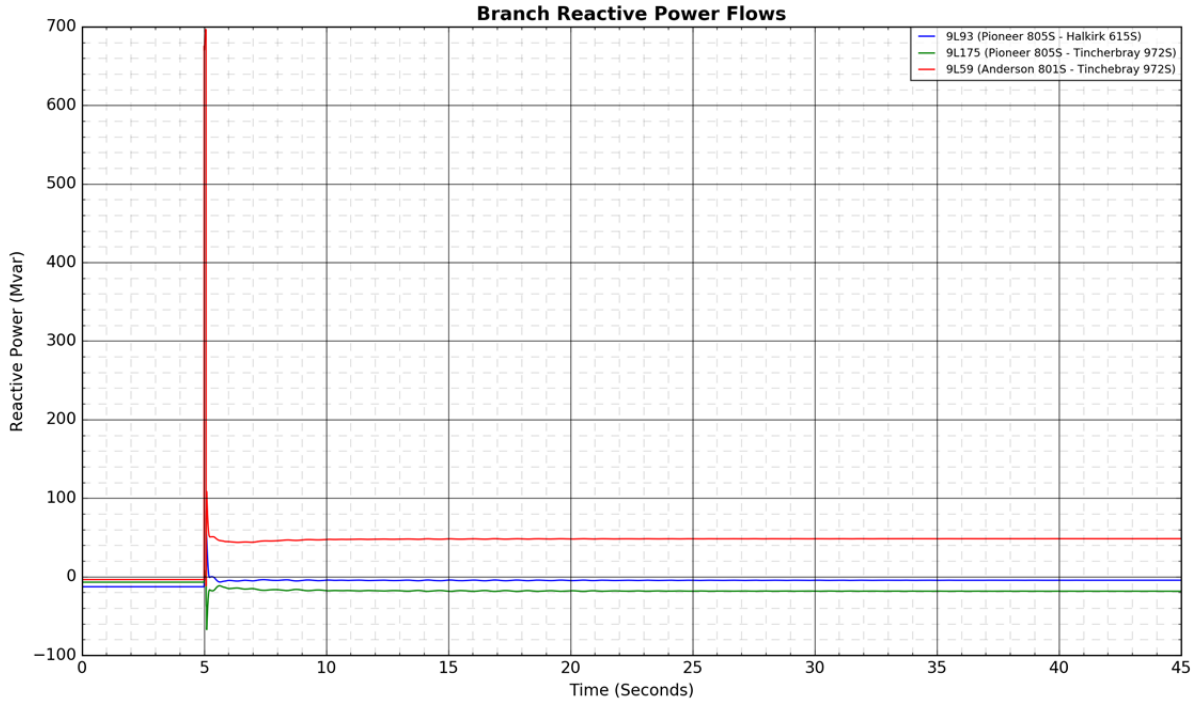
Branch Reactive Power Flows
9L93 (Pioneer 805S - Halkirk 615S)
9L175 (Pioneer 805S - Tincherbray 972S)
9L59 (Anderson 801S - Tinchebray 972S)
Reactive Power (Mvar)
Time (Seconds)

Figure A4-65: 9L59 (Anderson 801S - Tinchebray 972S): 3-phase fault at Anderson 801S

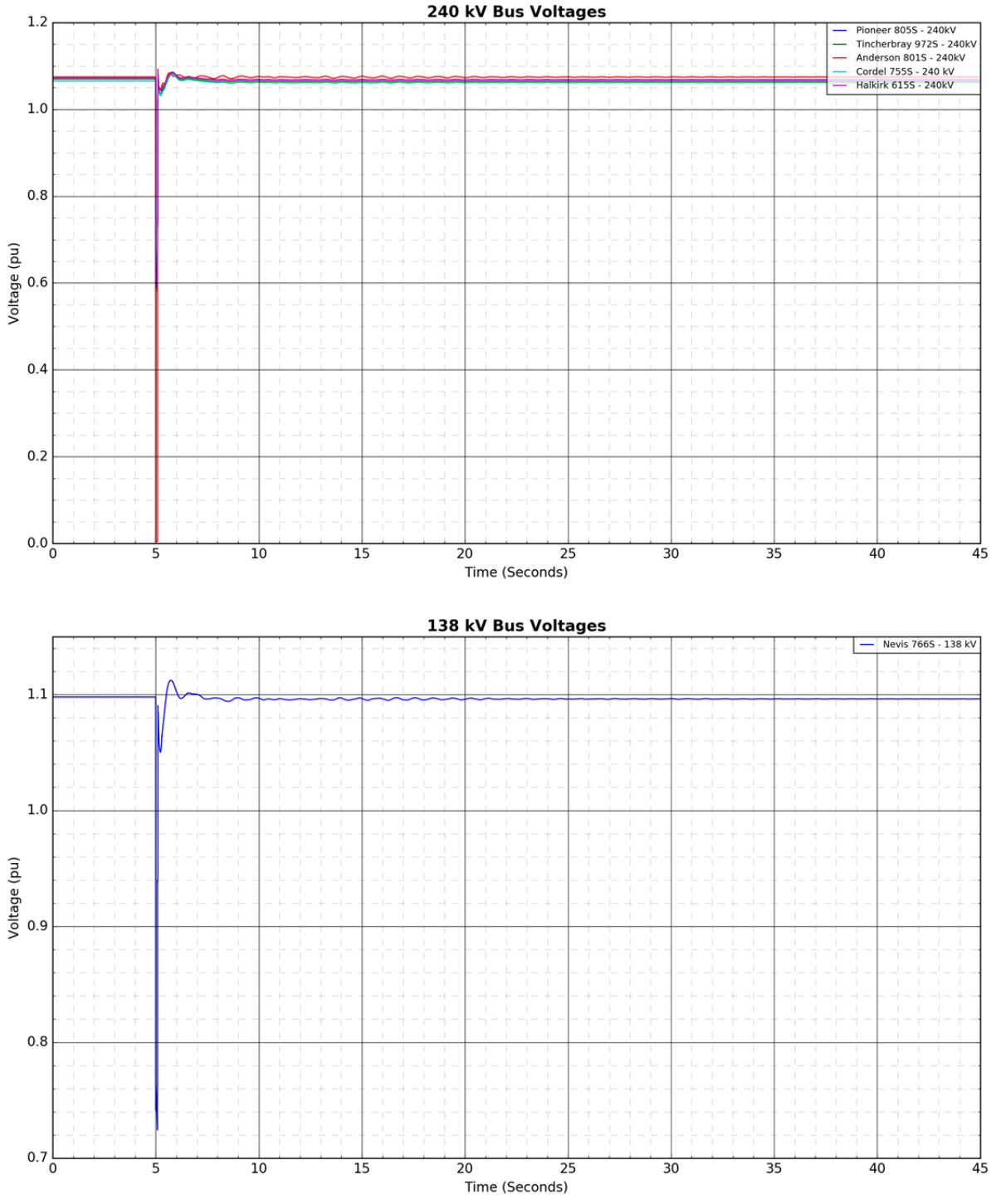

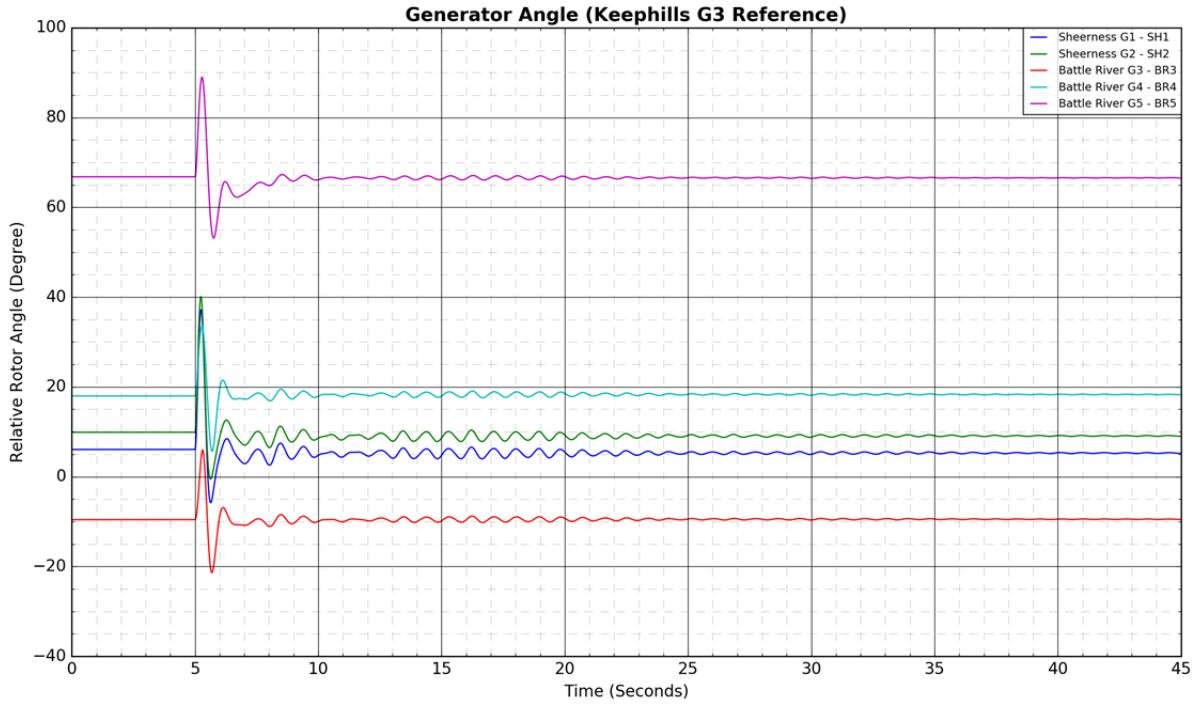
Generator Angle (Keephills G3 Reference)
Relative Rotor Angle (Degree)
Time (Seconds)
Sheerness G1 - SH1
Sheerness G2 - SH2
Battle River G3 - BR3
Battle River G4 - BR4
Battle River G5 - BR5

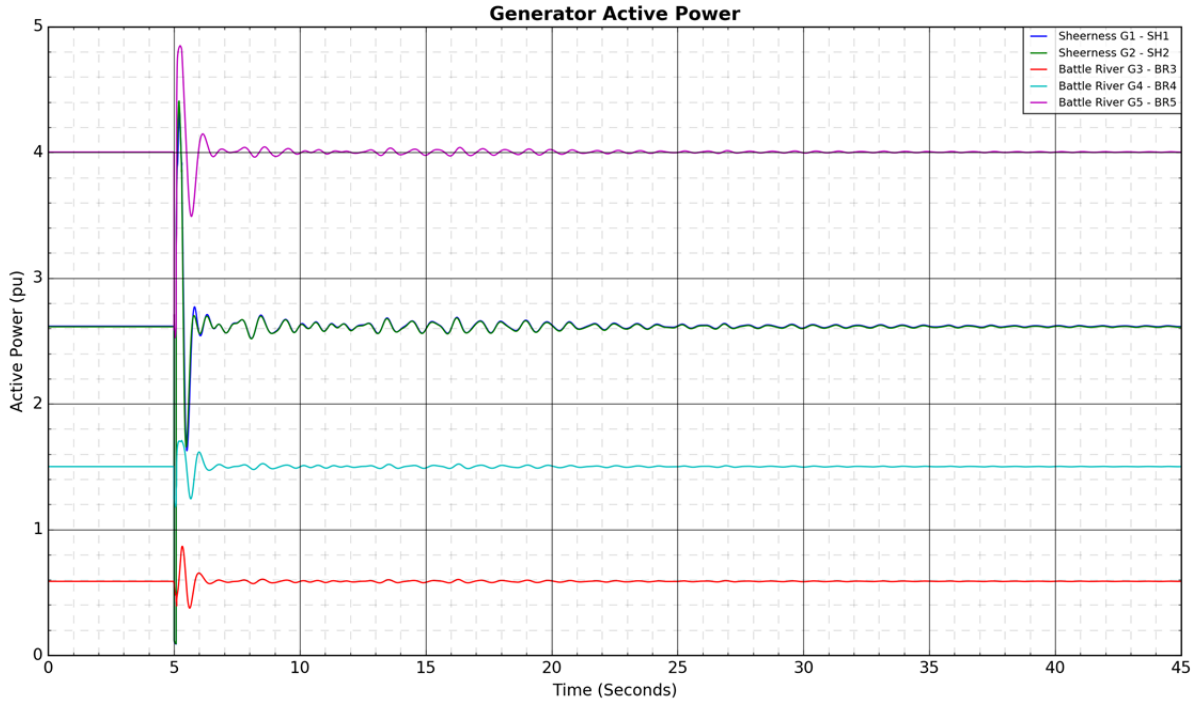
Generator Active Power
Active Power (pu)
Time (Seconds)
Sheerness G1 - SH1
Sheerness G2 - SH2
Battle River G3 - BR3
Battle River G4 - BR4
Battle River G5 - BR5

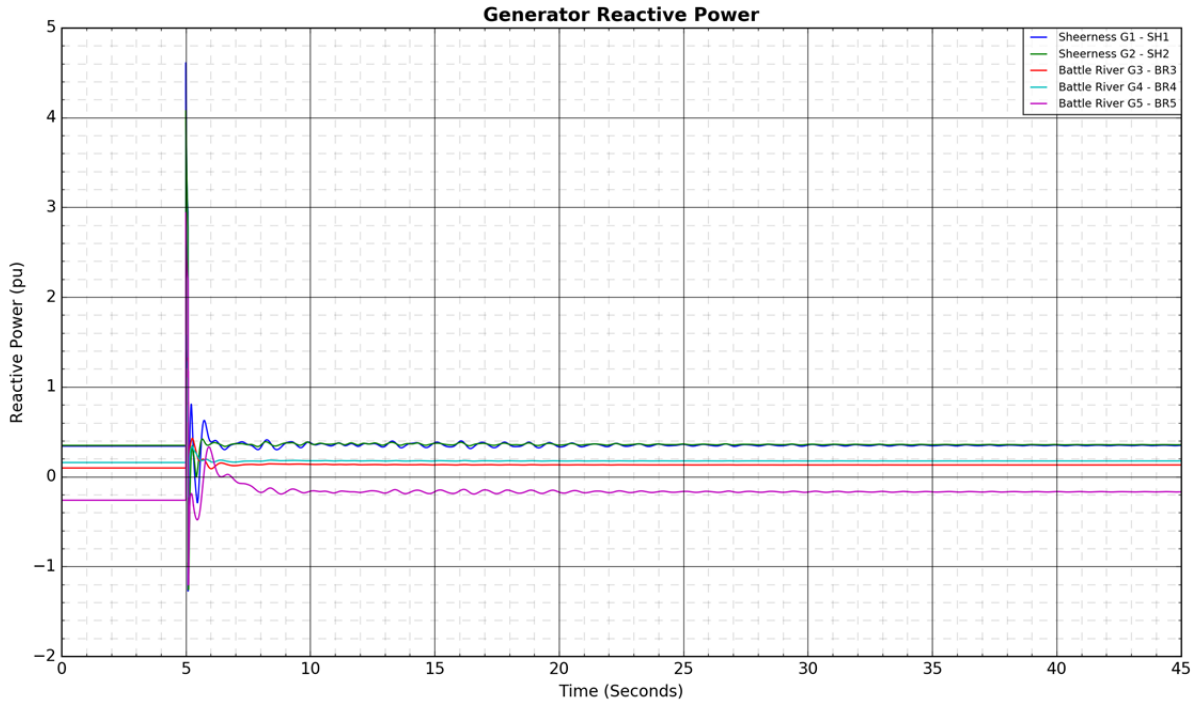
Generator Reactive Power
Sheerness G1 - SH1
Sheerness G2 - SH2
Battle River G3 - BR3
Battle River G4 - BR4
Battle River G5 - BR5
Reactive Power (pu)
Time (Seconds)

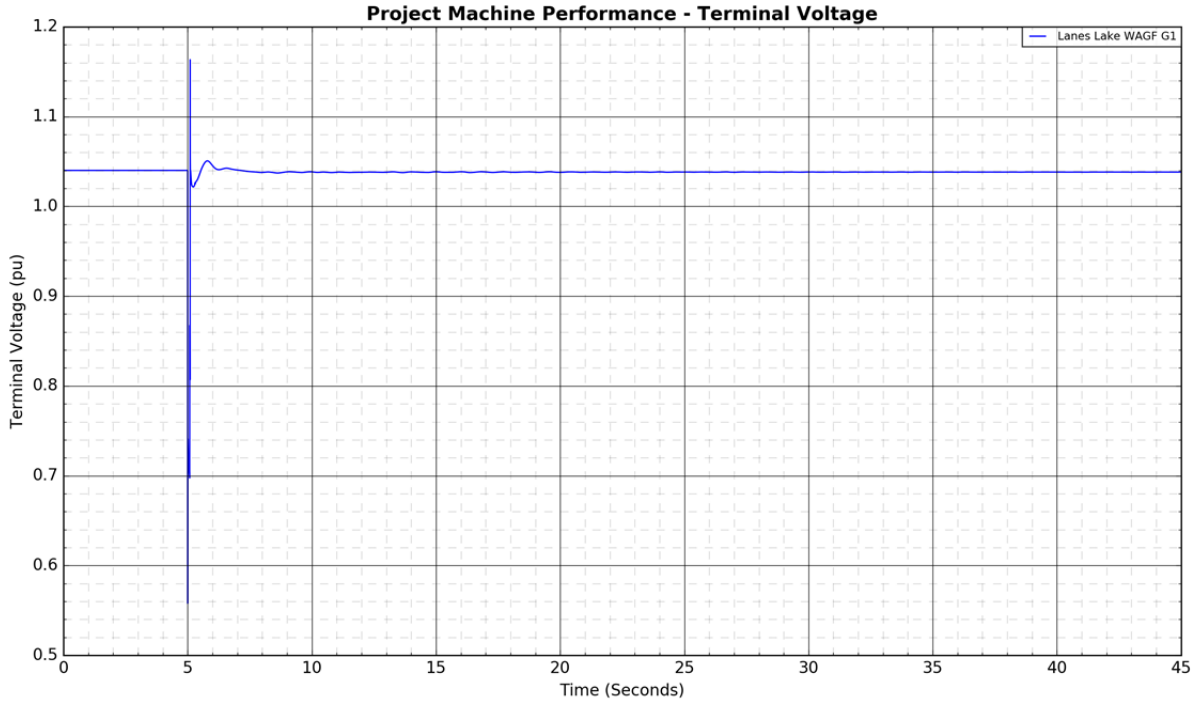
Project Machine Performance - Terminal Voltage
Lanes Lake WAGF G1
Terminal Voltage (pu)
Time (Seconds)


Project Machine Performance - Active Power
Lanes Lake WAGF G1
Active Power (pu)
Time (Seconds)
2.2
2.0
1.8
1.6
1.4
1.2
1.0
0.8
0
5
10
15
20
25
30
35
40
45

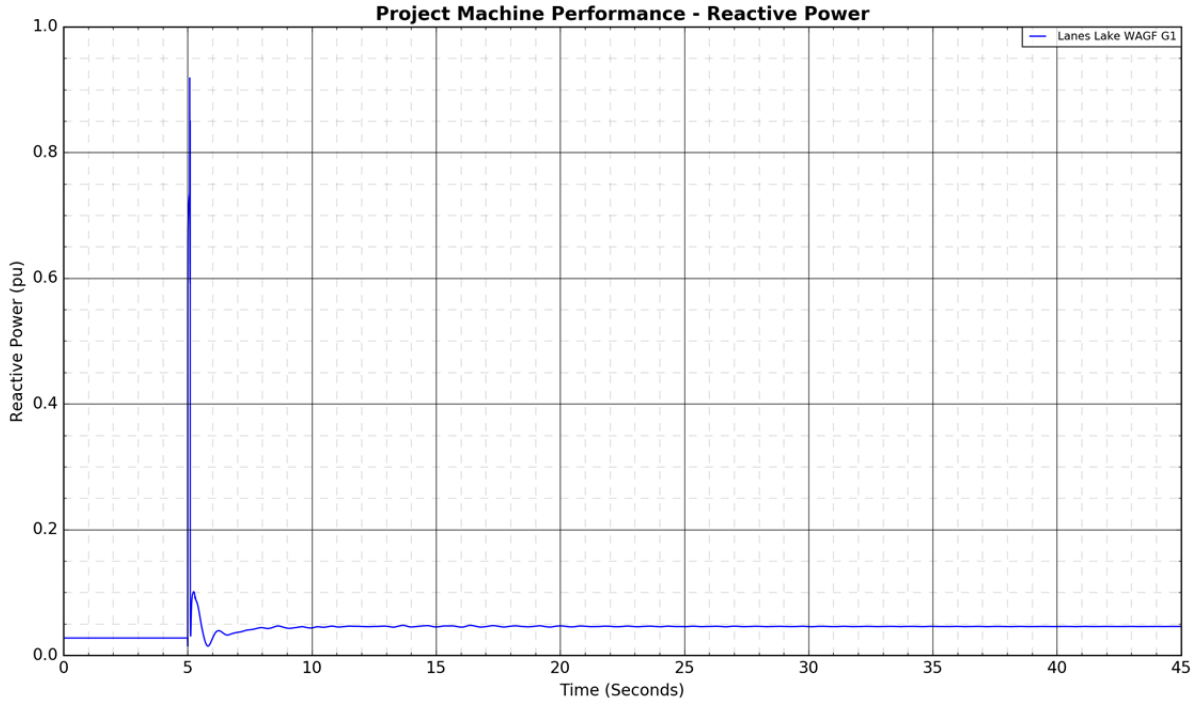
Project Machine Performance - Reactive Power
Lanes Lake WAGF G1
Reactive Power (pu)
Time (Seconds)
1.0
0.8
0.6
0.4
0.2
0.0
0
5
10
15
20
25
30
35
40
45

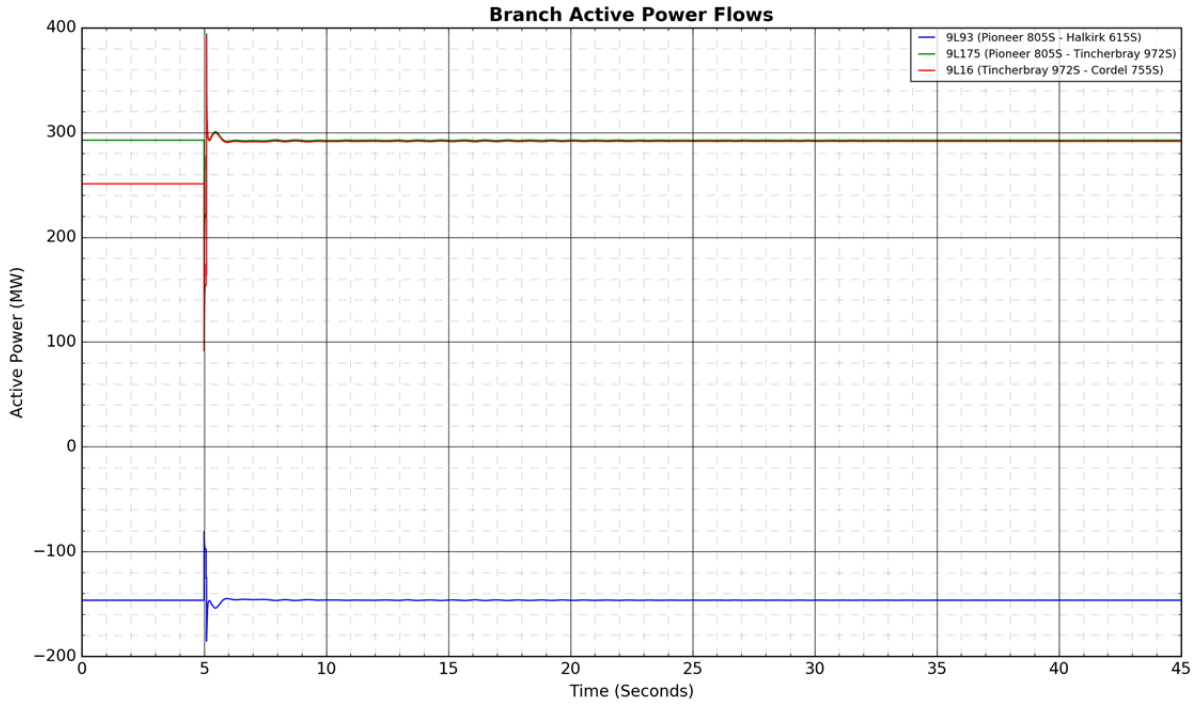
Branch Active Power Flows
9L93 (Pioneer 805S - Halkirk 615S)
9L175 (Pioneer 805S - Tincherbray 972S)
9L16 (Tincherbray 972S - Cordel 755S)
Active Power (MW)
Time (Seconds)

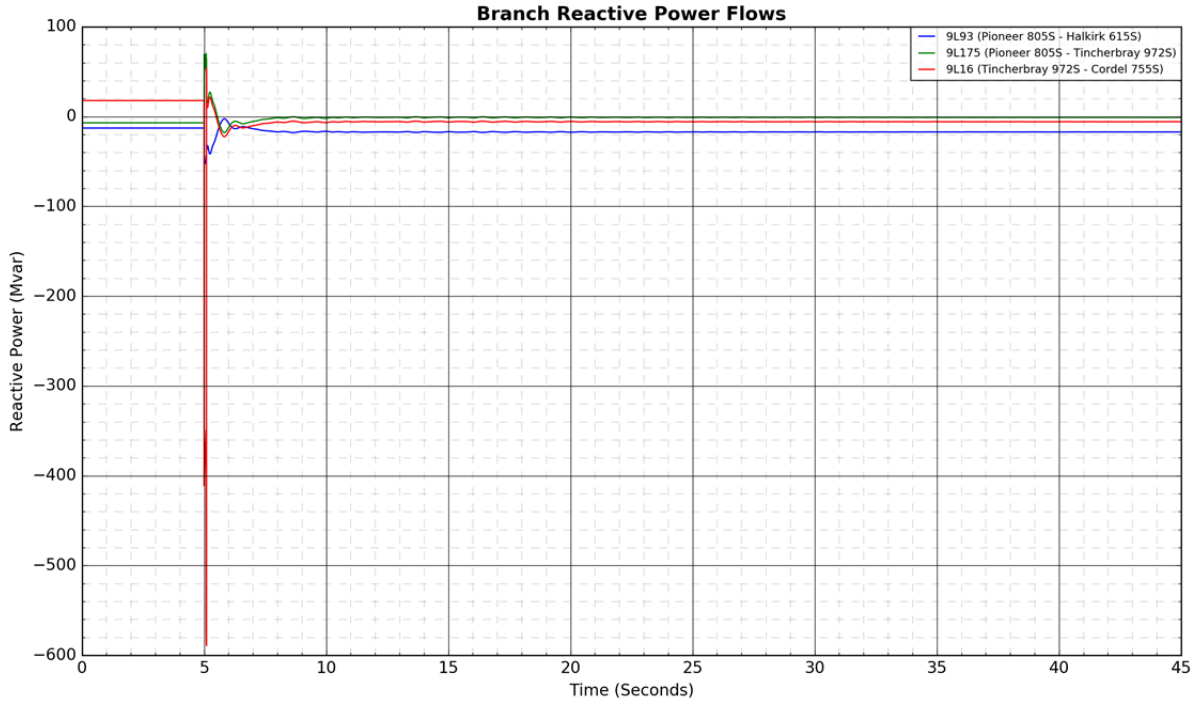
Branch Reactive Power Flows
9L93 (Pioneer 805S - Halkirk 615S)
9L175 (Pioneer 805S - Tincherbray 972S)
9L16 (Tincherbray 972S - Cordel 755S)
Reactive Power (Mvar)
Time (Seconds)

Figure A4-66: 9L59 (Anderson 801S - Tinchebray 972S): 3-phase fault at Tinchebray 972S

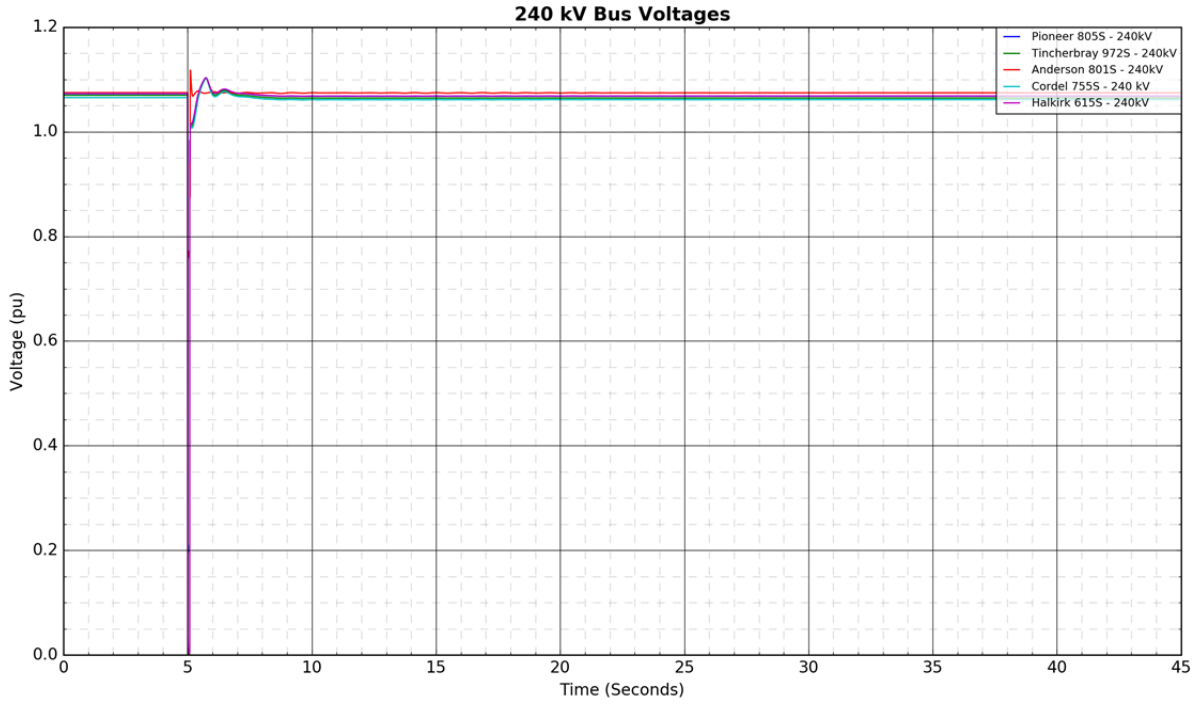

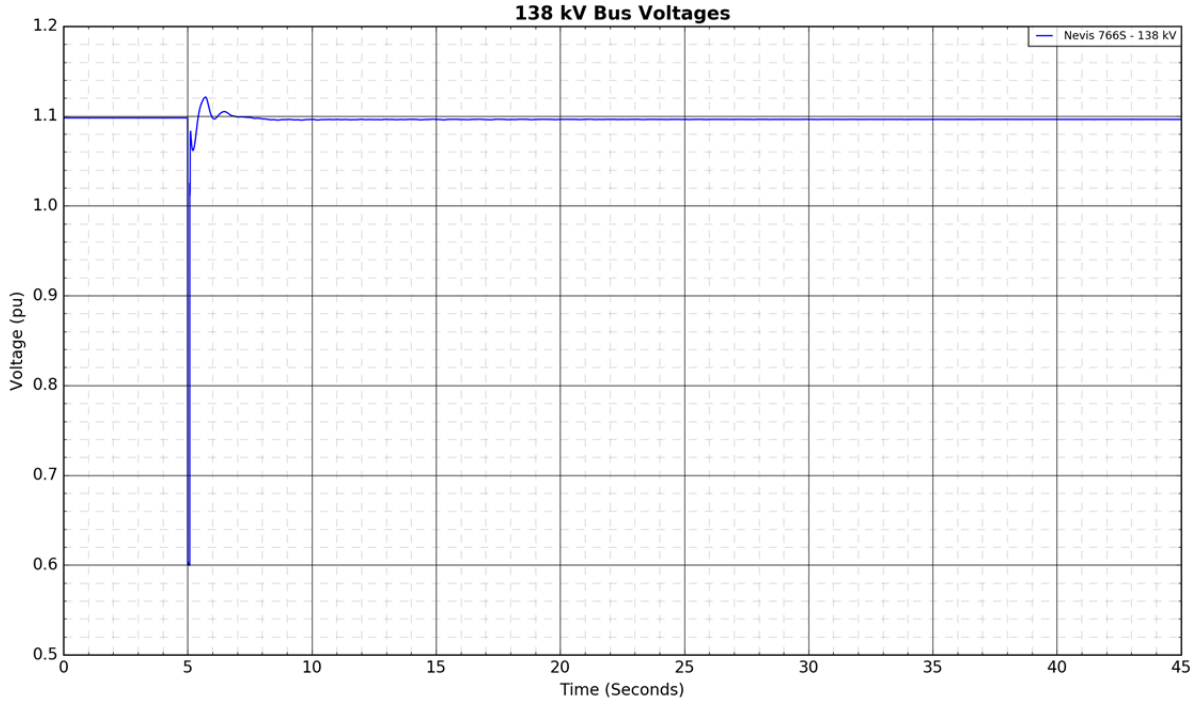

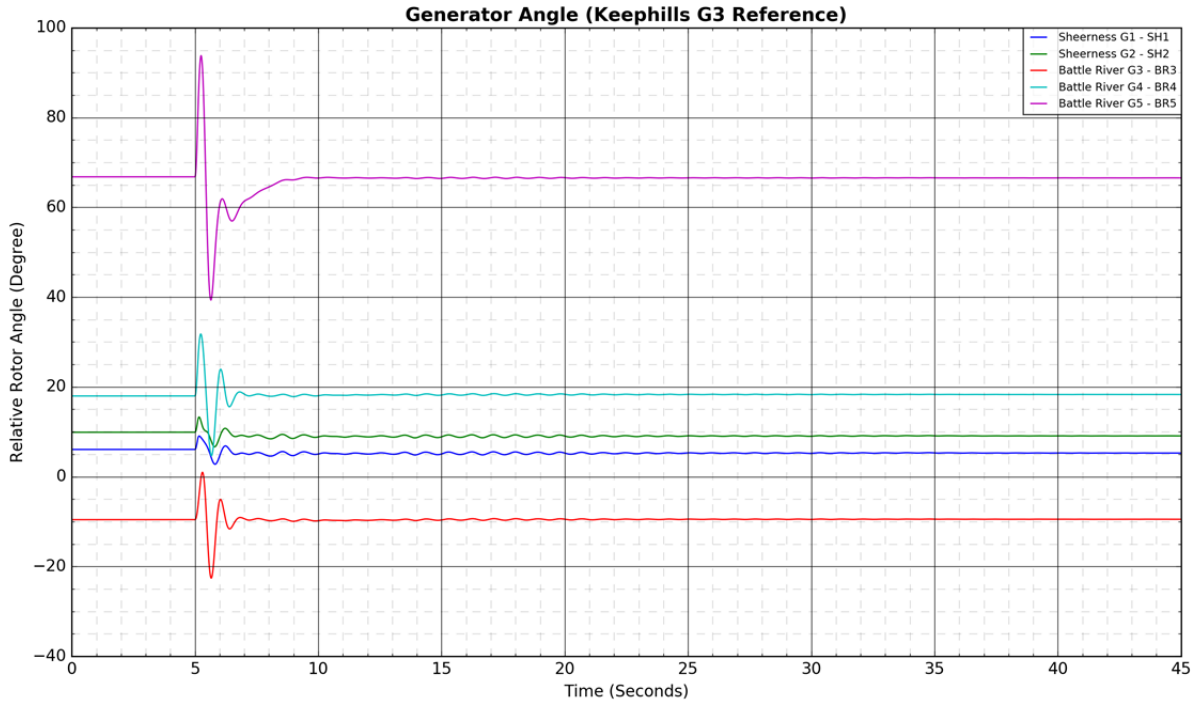
Generator Angle (Keephills G3 Reference)
Relative Rotor Angle (Degree)
Time (Seconds)
Sheerness G1 - SH1
Sheerness G2 - SH2
Battle River G3 - BR3
Battle River G4 - BR4
Battle River G5 - BR5

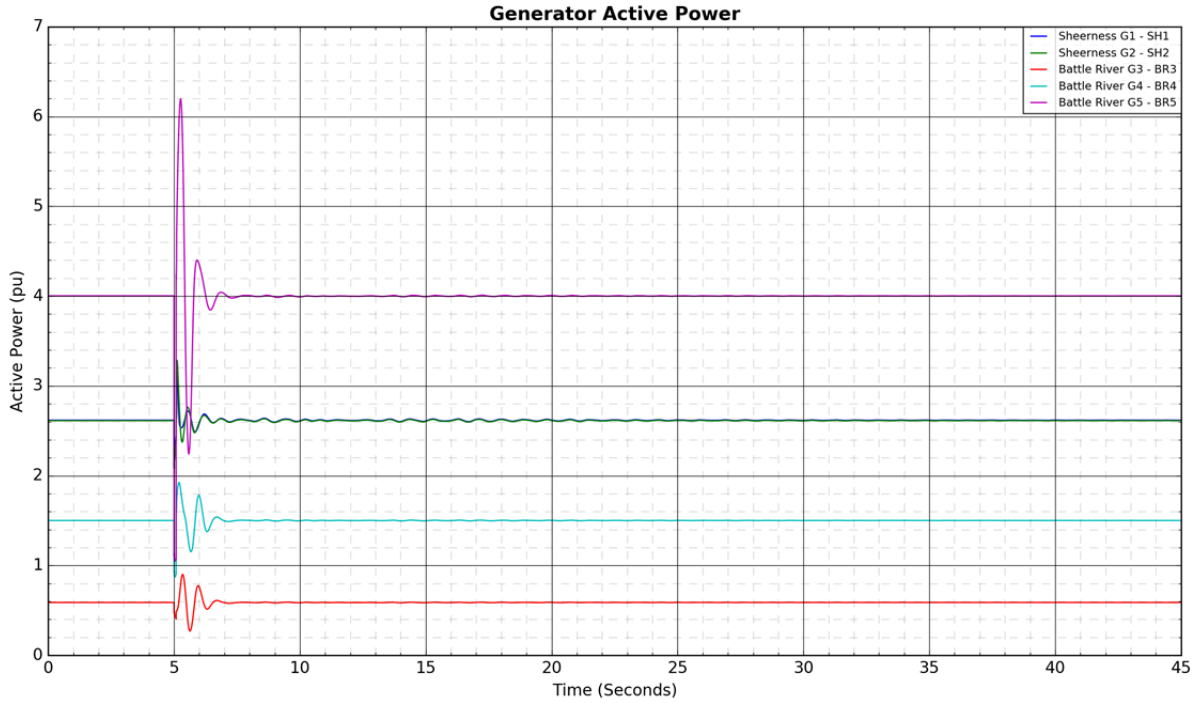
Generator Active Power
Active Power (pu)
Time (Seconds)
Sheerness G1 - SH1
Sheerness G2 - SH2
Battle River G3 - BR3
Battle River G4 - BR4
Battle River G5 - BR5

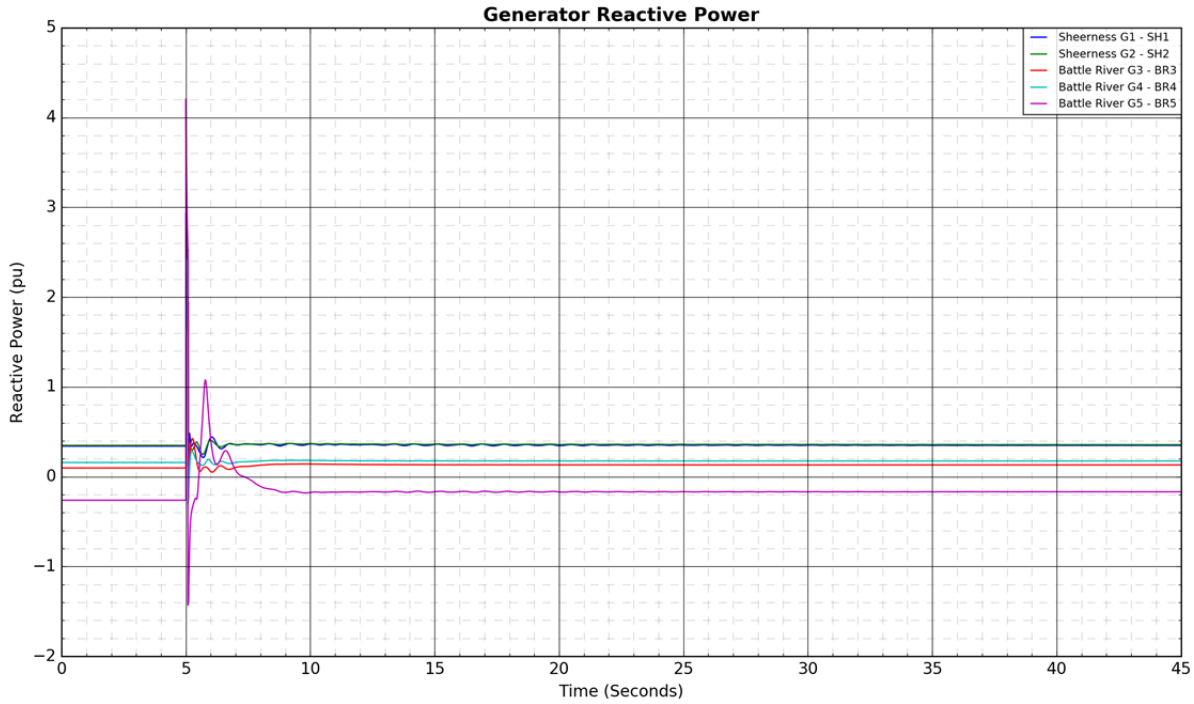
Generator Reactive Power
Sheerness G1 - SH1
Sheerness G2 - SH2
Battle River G3 - BR3
Battle River G4 - BR4
Battle River G5 - BR5
Reactive Power (pu)
Time (Seconds)

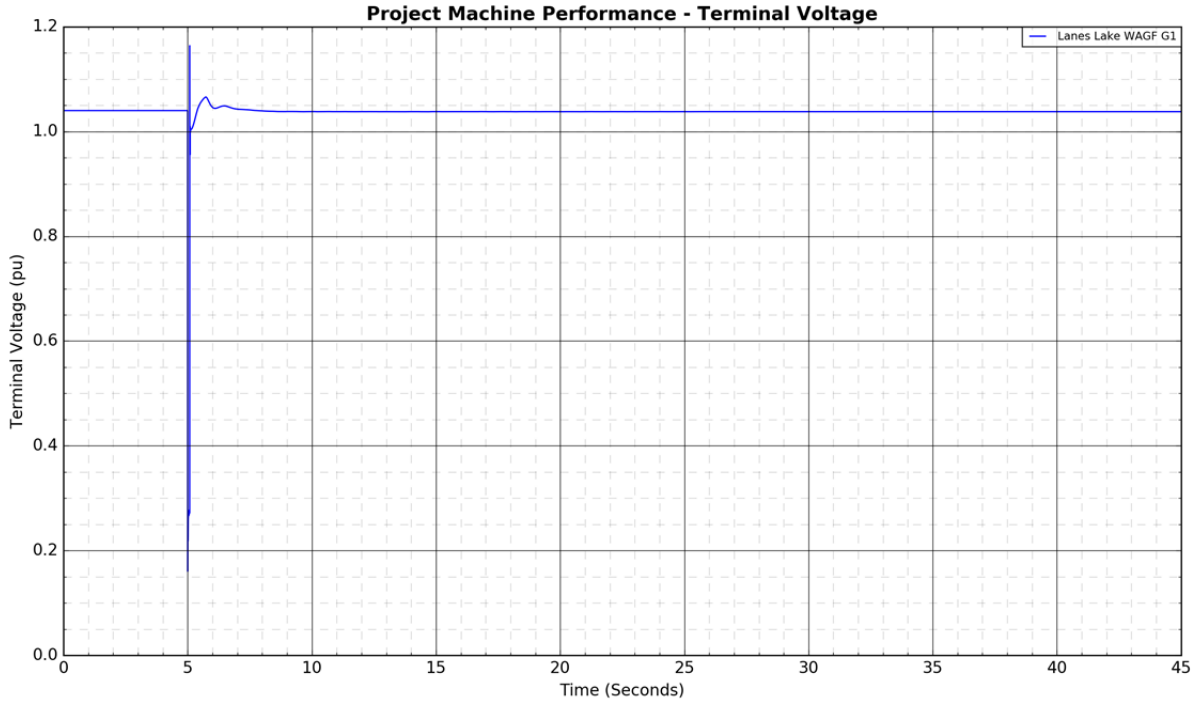
Project Machine Performance - Terminal Voltage
Lanes Lake WAGF G1
Terminal Voltage (pu)
Time (Seconds)

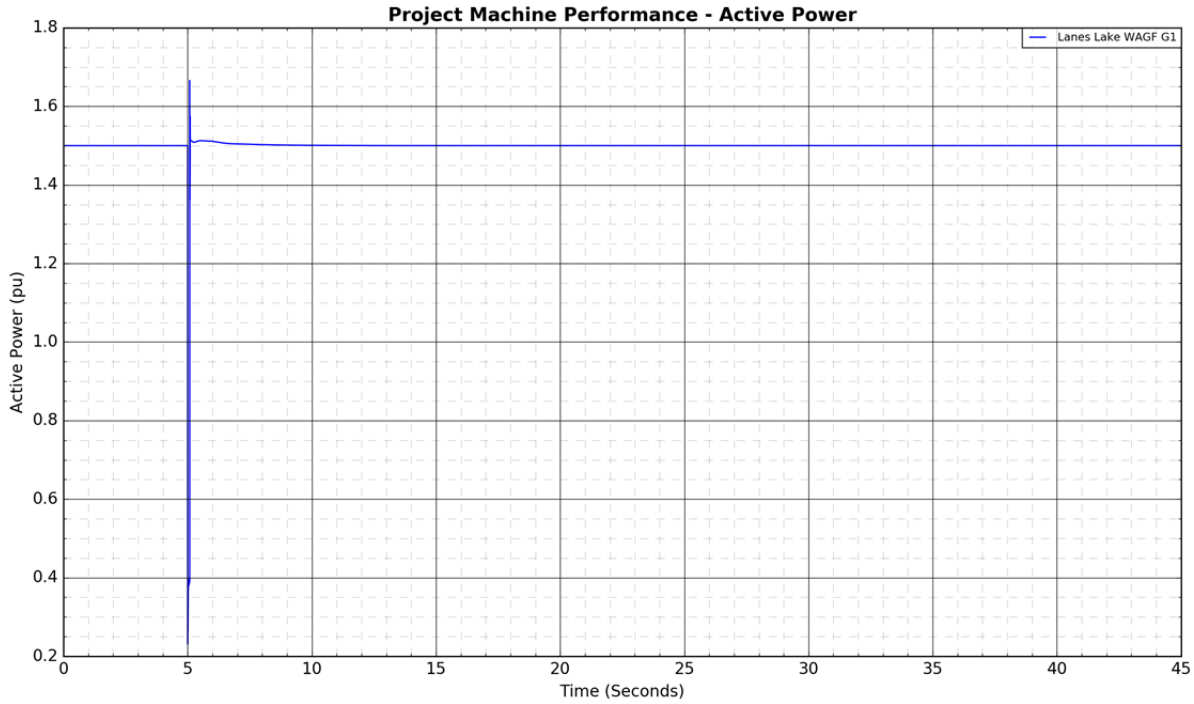
Project Machine Performance - Active Power
Lanes Lake WAGF G1
Active Power (pu)
Time (Seconds)
1.8
1.6
1.4
1.2
1.0
0.8
0.6
0.4
0.2
0
5
10
15
20
25
30
35
40
45

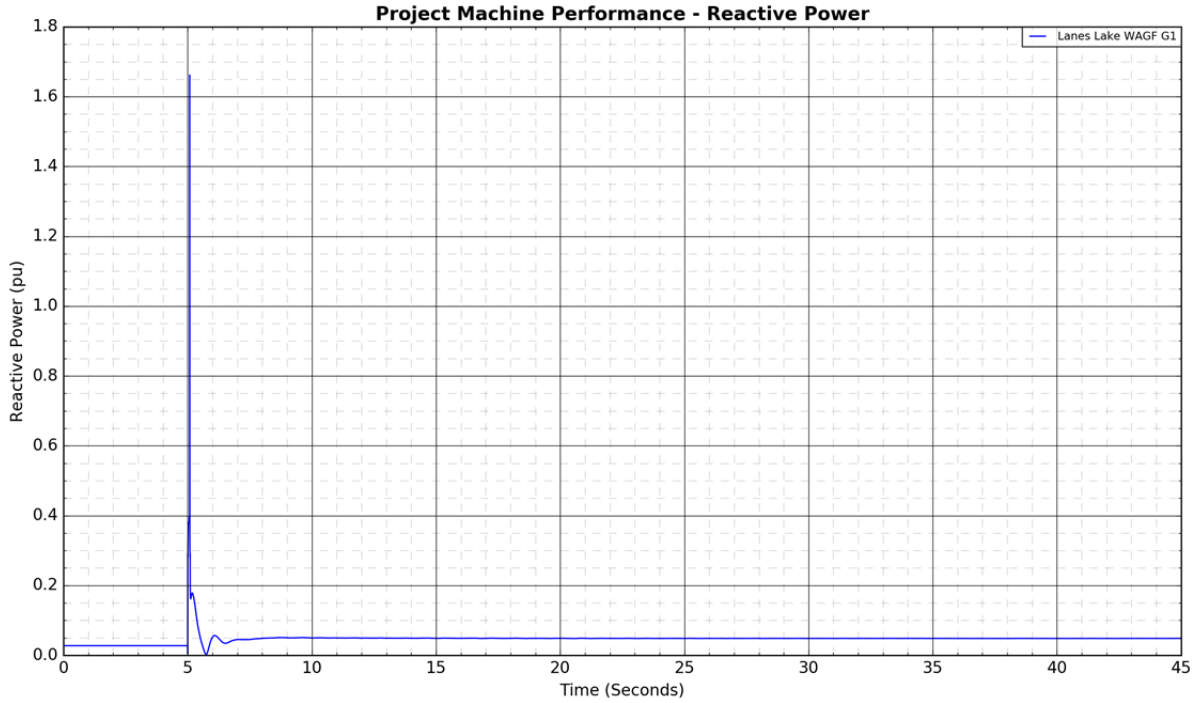
Project Machine Performance - Reactive Power
Lanes Lake WAGF G1
Reactive Power (pu)
Time (Seconds)
1.8
1.6
1.4
1.2
1.0
0.8
0.6
0.4
0.2
0.0
0
5
10
15
20
25
30
35
40
45

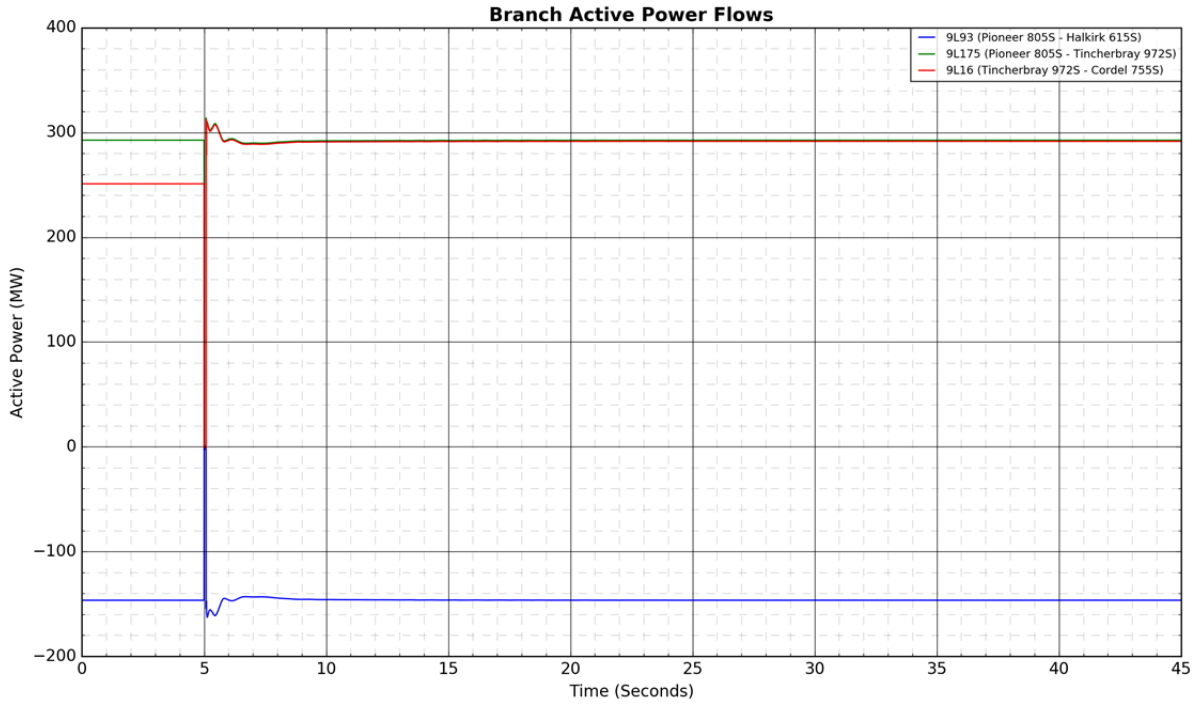
Branch Active Power Flows
9L93 (Pioneer 805S - Halkirk 615S)
9L175 (Pioneer 805S - Tincherbray 972S)
9L16 (Tincherbray 972S - Cordel 755S)
Active Power (MW)
Time (Seconds)

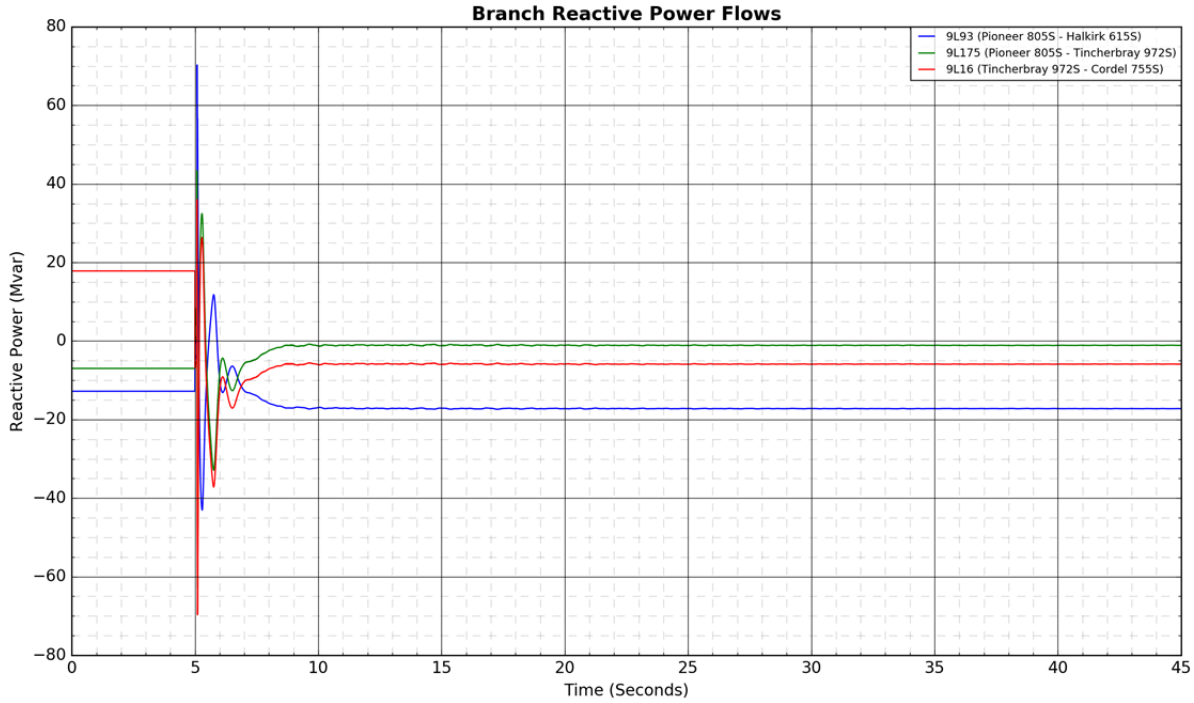
Branch Reactive Power Flows
9L93 (Pioneer 805S - Halkirk 615S)
9L175 (Pioneer 805S - Tincherbray 972S)
9L16 (Tincherbray 972S - Cordel 755S)
Reactive Power (Mvar)
Time (Seconds)

Figure A4-67: 9L966 (Pemukan 932S - Hansman Lake 650S): 3-phase fault at Pemukan 932S

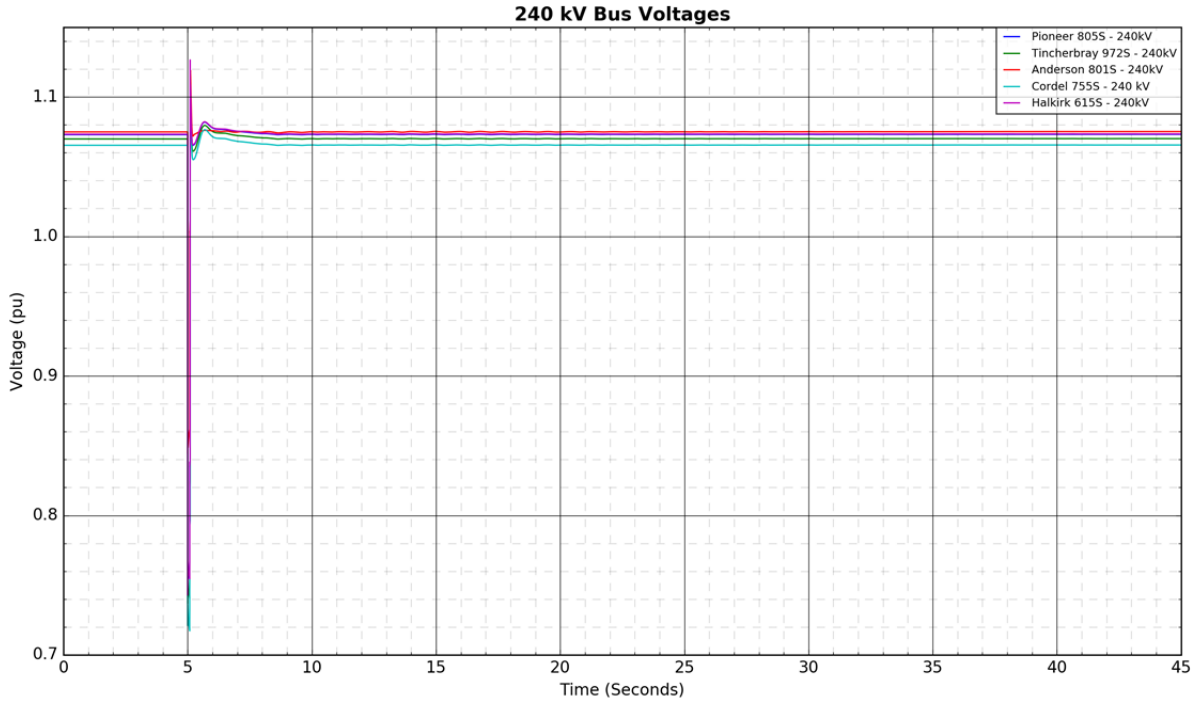

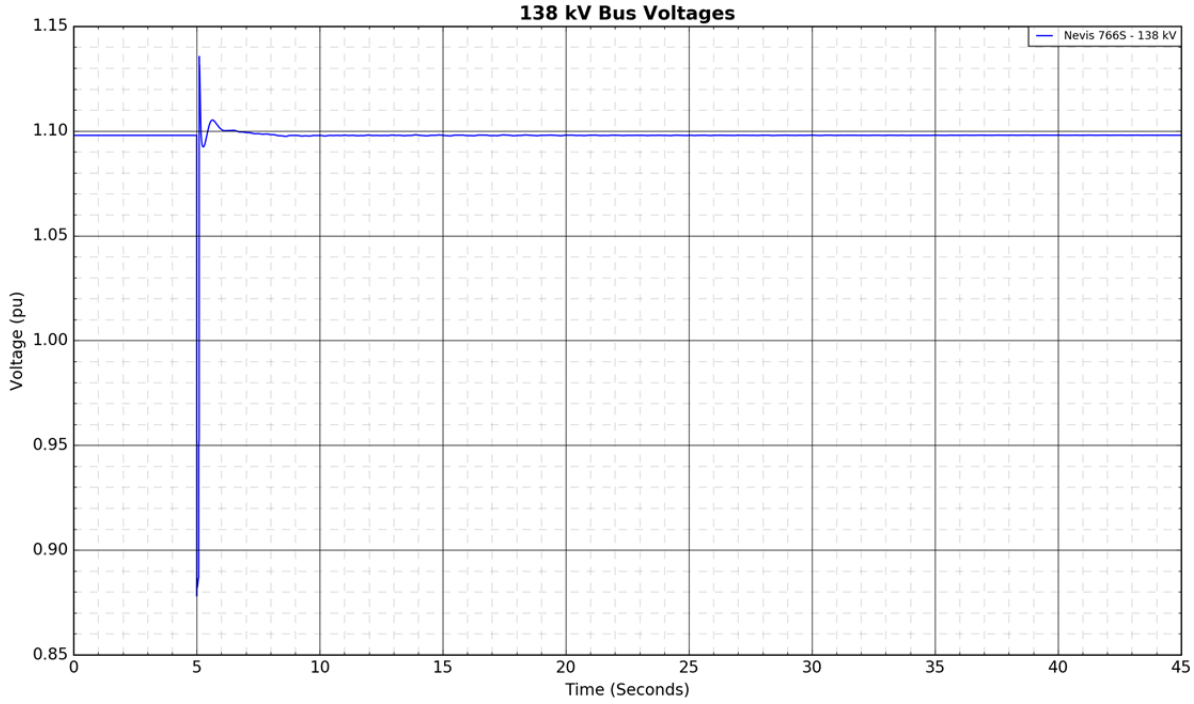

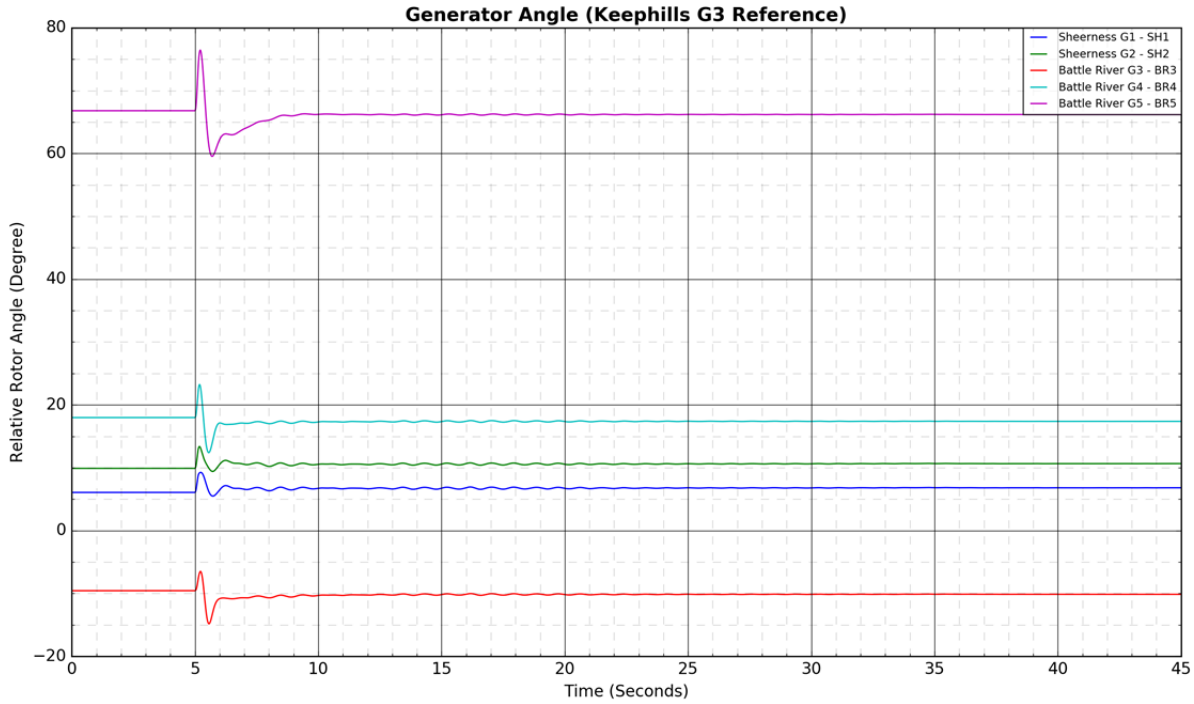
Generator Angle (Keephills G3 Reference)
Relative Rotor Angle (Degree)
Time (Seconds)
Sheerness G1 - SH1
Sheerness G2 - SH2
Battle River G3 - BR3
Battle River G4 - BR4
Battle River G5 - BR5

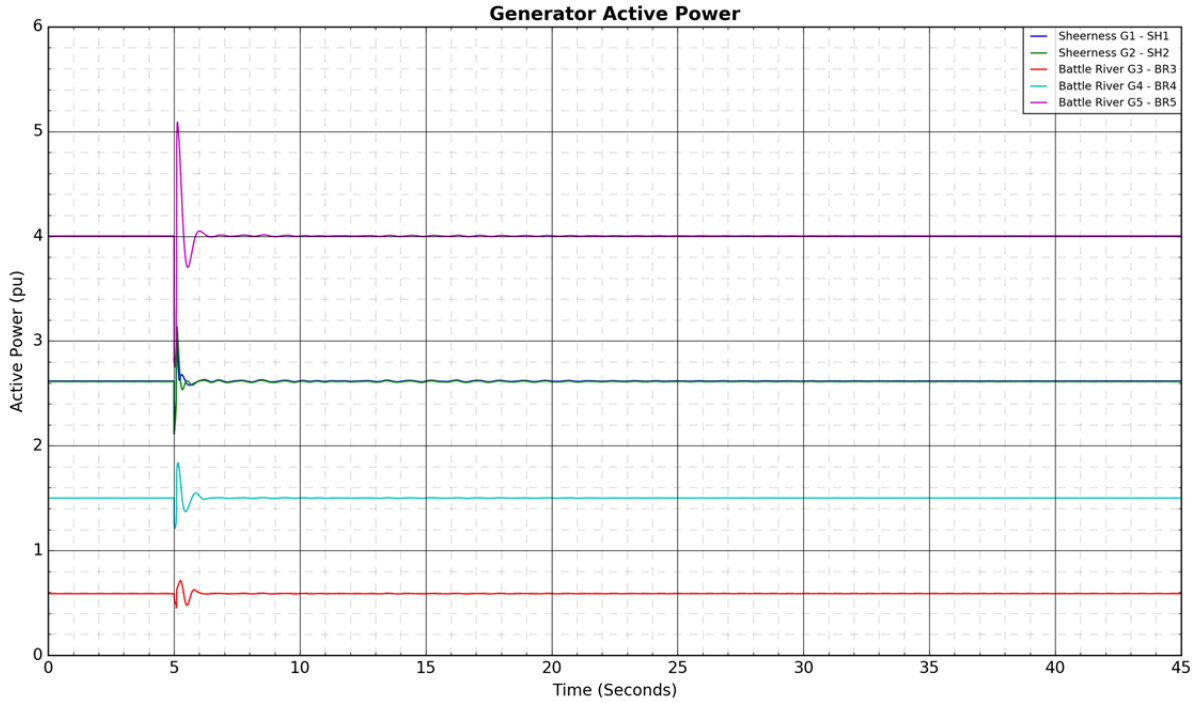
Generator Active Power
Active Power (pu)
Time (Seconds)
Sheerness G1 - SH1
Sheerness G2 - SH2
Battle River G3 - BR3
Battle River G4 - BR4
Battle River G5 - BR5

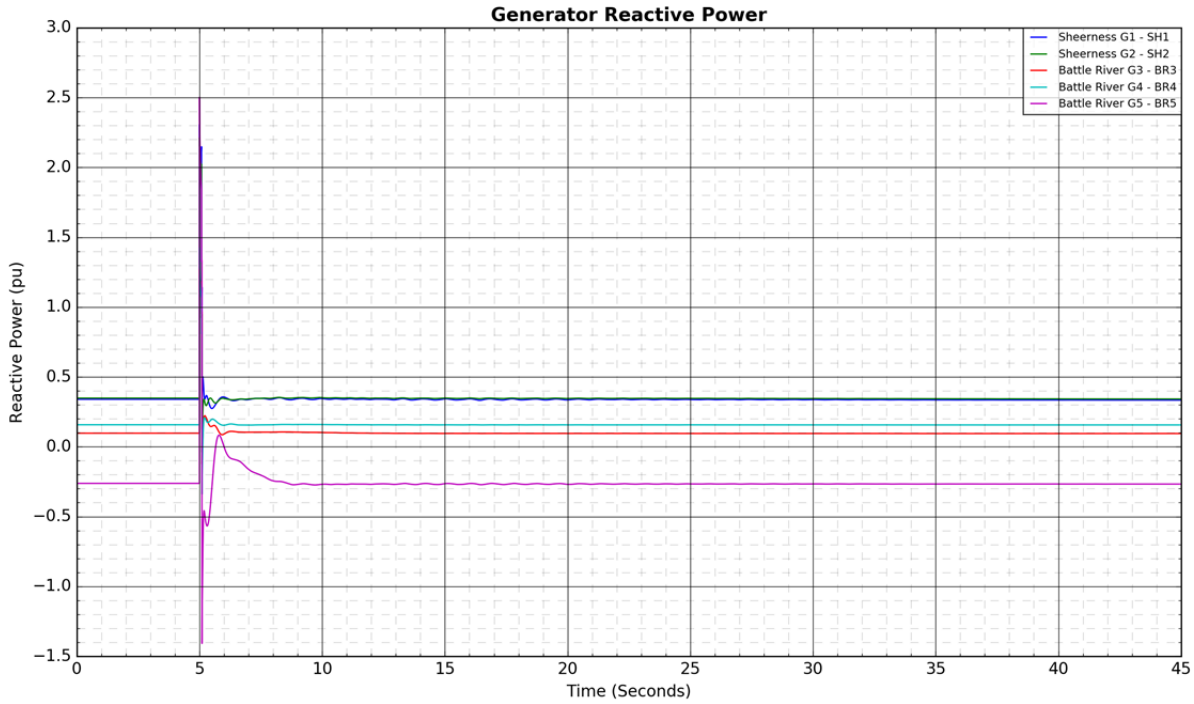
Generator Reactive Power
Sheerness G1 - SH1
Sheerness G2 - SH2
Battle River G3 - BR3
Battle River G4 - BR4
Battle River G5 - BR5
Reactive Power (pu)
Time (Seconds)

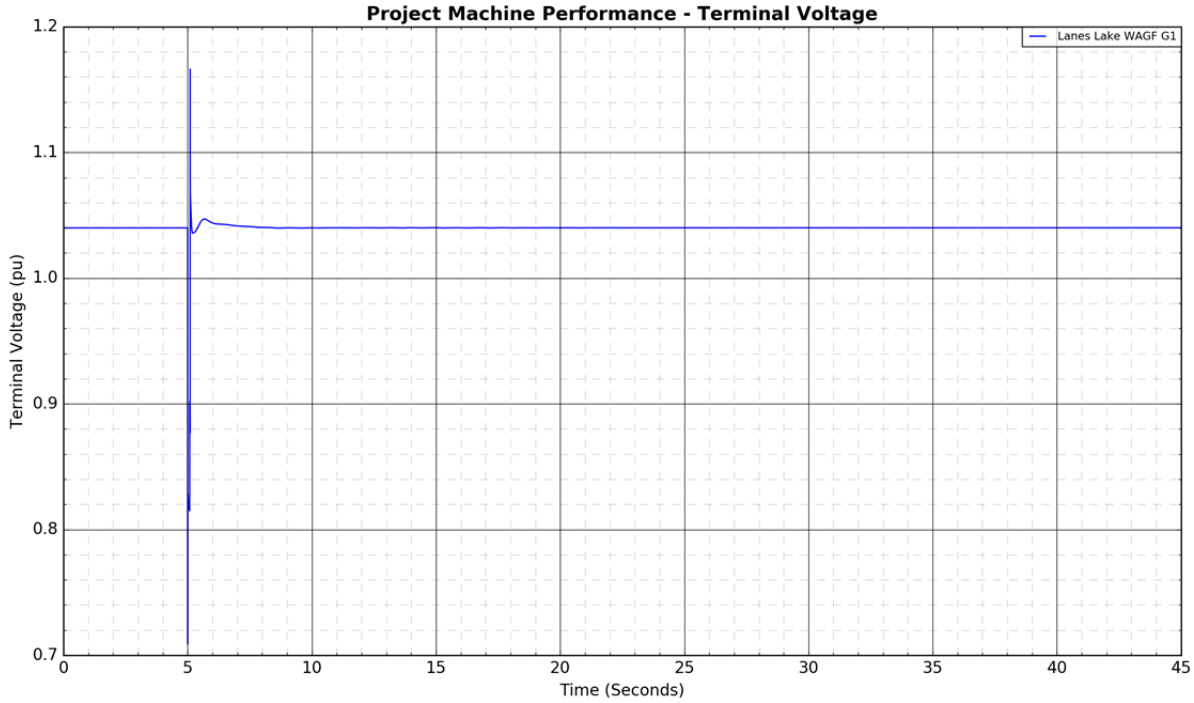
Project Machine Performance - Terminal Voltage
Lanes Lake WAGF G1
Terminal Voltage (pu)
Time (Seconds)


Project Machine Performance - Active Power
Lanes Lake WAGF G1
Active Power (pu)
2.0
1.8
1.6
1.4
1.2
1.0
0
5
10
15
20
25
30
35
40
45
Time (Seconds)

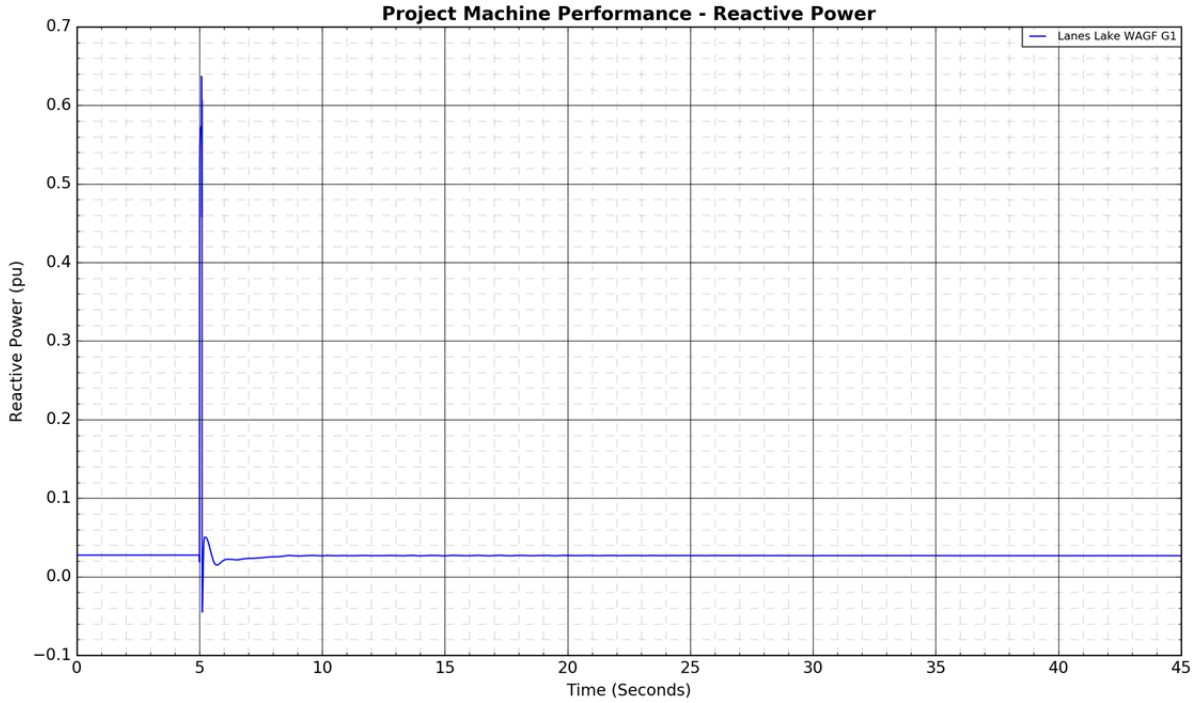
Project Machine Performance - Reactive Power
Lanes Lake WAGF G1
Reactive Power (pu)
0.7
0.6
0.5
0.4
0.3
0.2
0.1
0.0
−0.1
0
5
10
15
20
25
30
35
40
45
Time (Seconds)

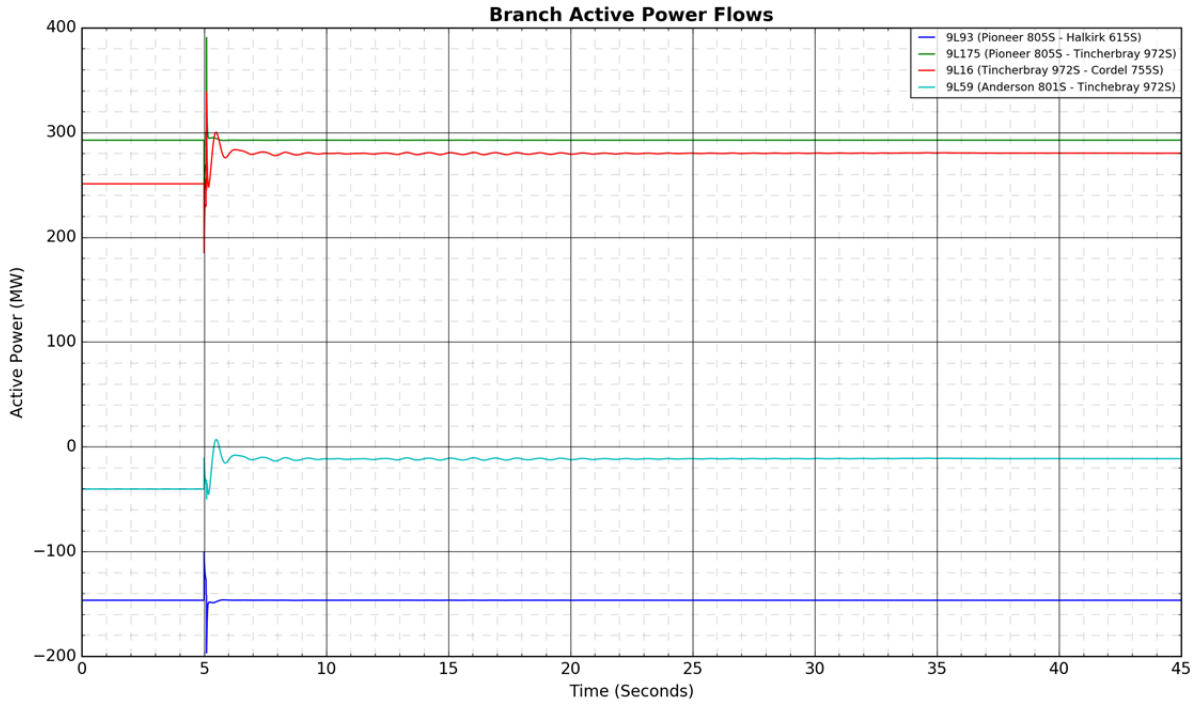
Branch Active Power Flows
9L93 (Pioneer 805S - Halkirk 615S)
9L175 (Pioneer 805S - Tincherbray 972S)
9L16 (Tincherbray 972S - Cordel 755S)
9L59 (Anderson 801S - Tinchebray 972S)
Active Power (MW)
Time (Seconds)

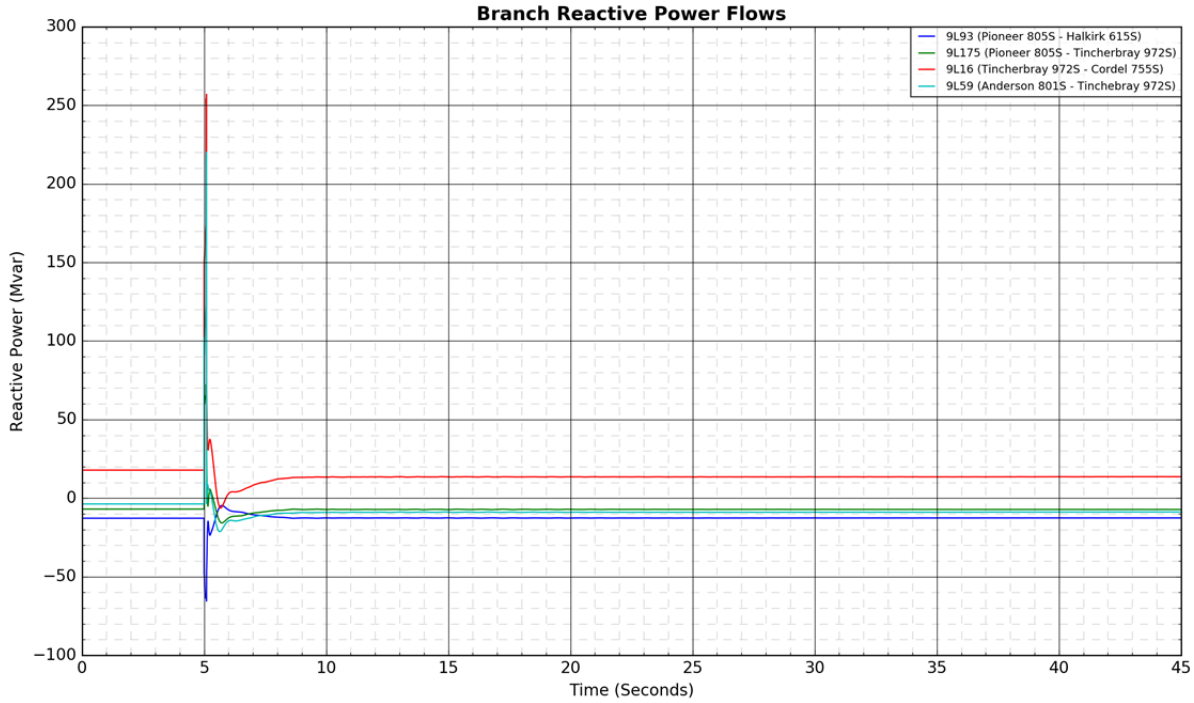
Branch Reactive Power Flows
9L93 (Pioneer 805S - Halkirk 615S)
9L175 (Pioneer 805S - Tincherbray 972S)
9L16 (Tincherbray 972S - Cordel 755S)
9L59 (Anderson 801S - Tinchebray 972S)
Reactive Power (Mvar)
Time (Seconds)

Figure A4-68: 9L966 (Pemukan 932S - Hansman Lake 650S): 3-phase fault at Hansman Lake 650S

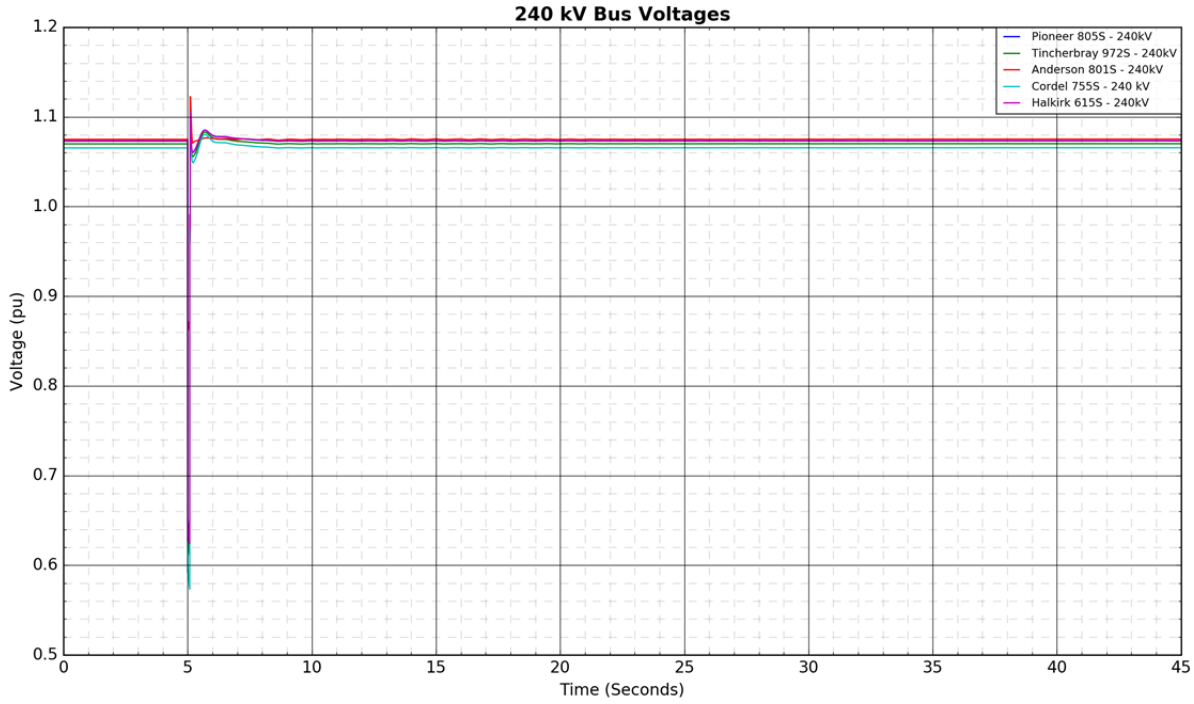

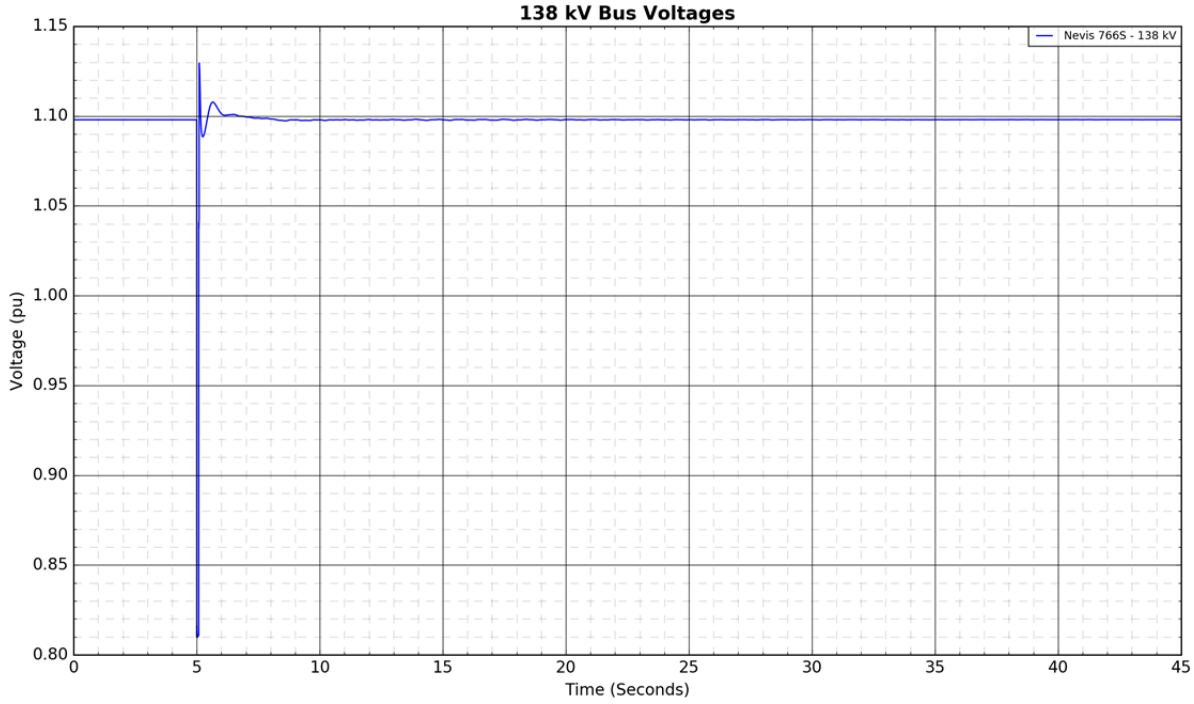

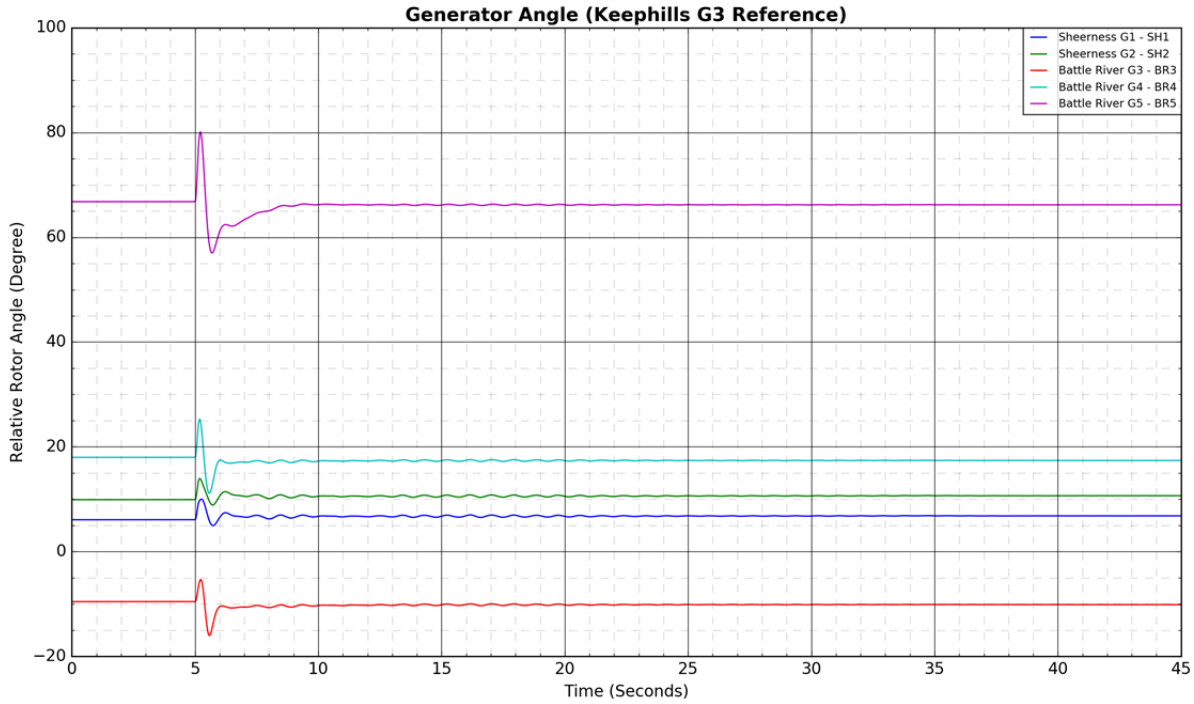
Generator Angle (Keephills G3 Reference)
Relative Rotor Angle (Degree)
Time (Seconds)
Sheerness G1 - SH1
Sheerness G2 - SH2
Battle River G3 - BR3
Battle River G4 - BR4
Battle River G5 - BR5

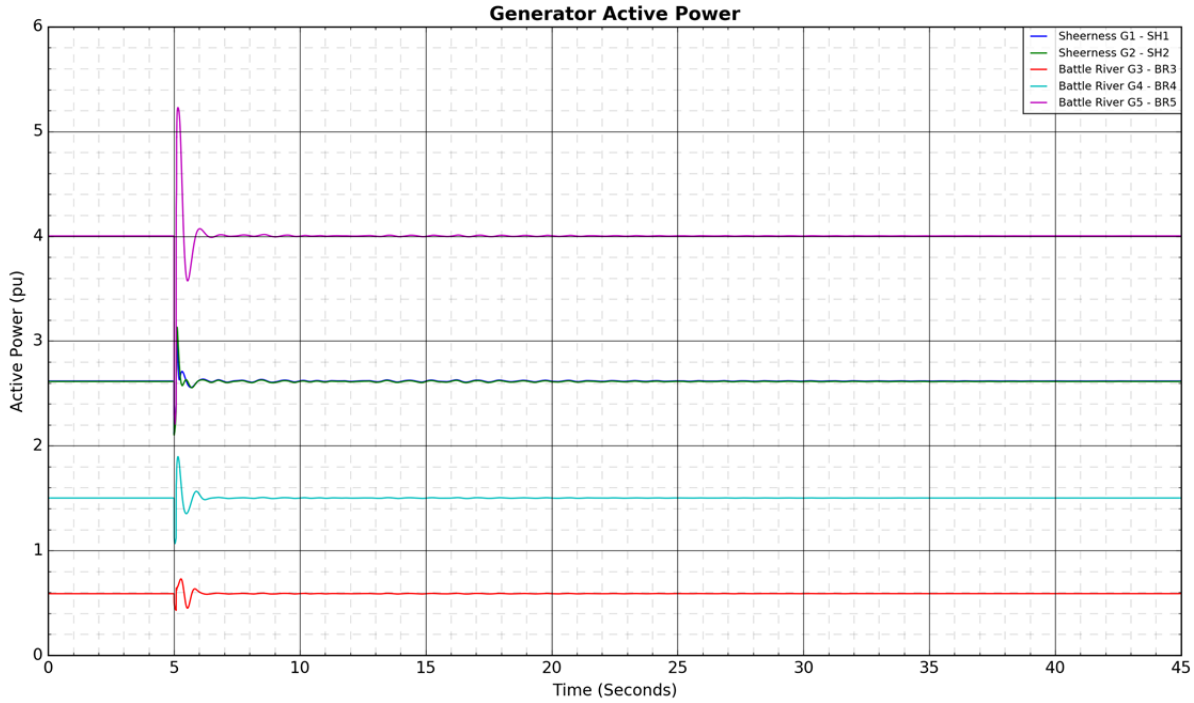
Generator Active Power
Active Power (pu)
Time (Seconds)
Sheerness G1 - SH1
Sheerness G2 - SH2
Battle River G3 - BR3
Battle River G4 - BR4
Battle River G5 - BR5

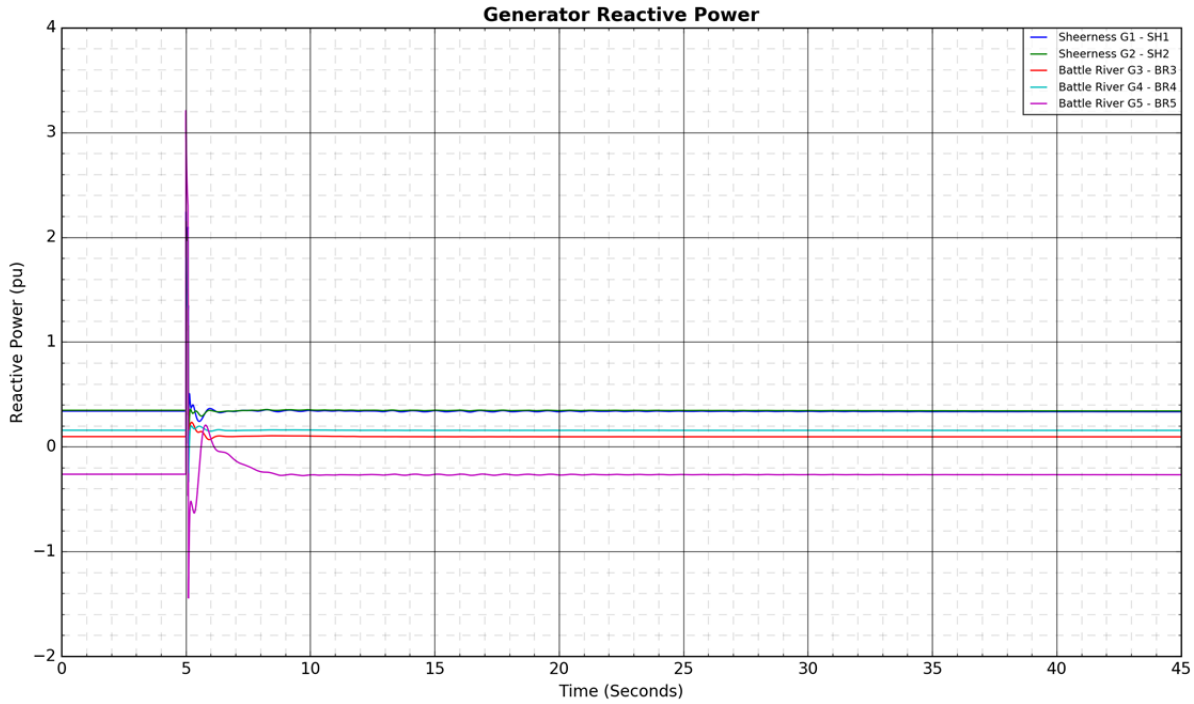
Generator Reactive Power
Sheerness G1 - SH1
Sheerness G2 - SH2
Battle River G3 - BR3
Battle River G4 - BR4
Battle River G5 - BR5
Reactive Power (pu)
Time (Seconds)

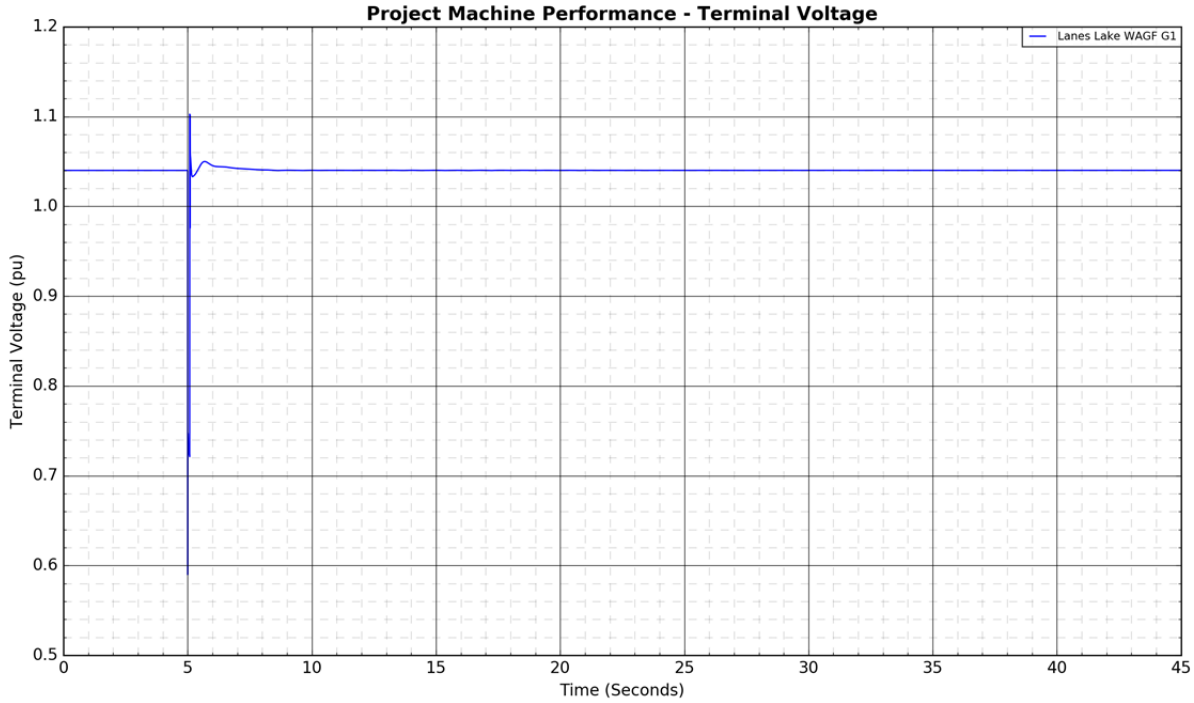
Project Machine Performance - Terminal Voltage
Lanes Lake WAGF G1
Terminal Voltage (pu)
Time (Seconds)


Project Machine Performance - Active Power
Lanes Lake WAGF G1
Active Power (pu)
Time (Seconds)
2.2
2.0
1.8
1.6
1.4
1.2
1.0
0.8
0
5
10
15
20
25
30
35
40
45

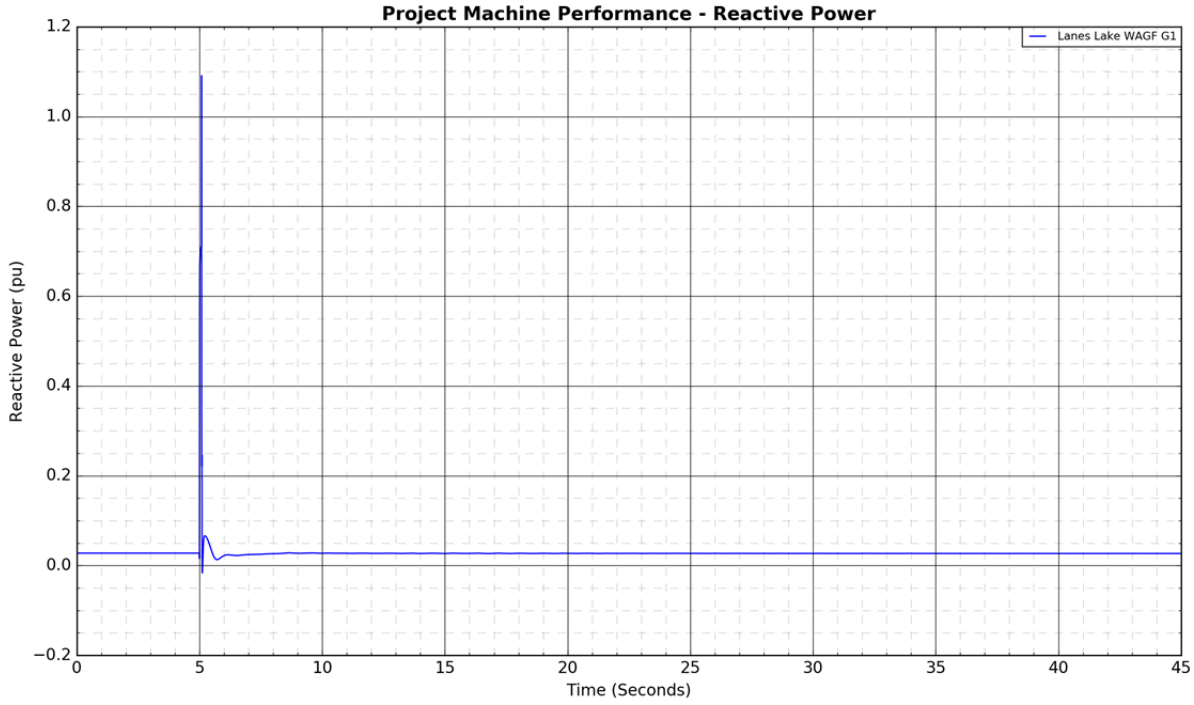
Project Machine Performance - Reactive Power
Lanes Lake WAGF G1
Reactive Power (pu)
Time (Seconds)
1.2
1.0
0.8
0.6
0.4
0.2
0.0
−0.2
0
5
10
15
20
25
30
35
40
45

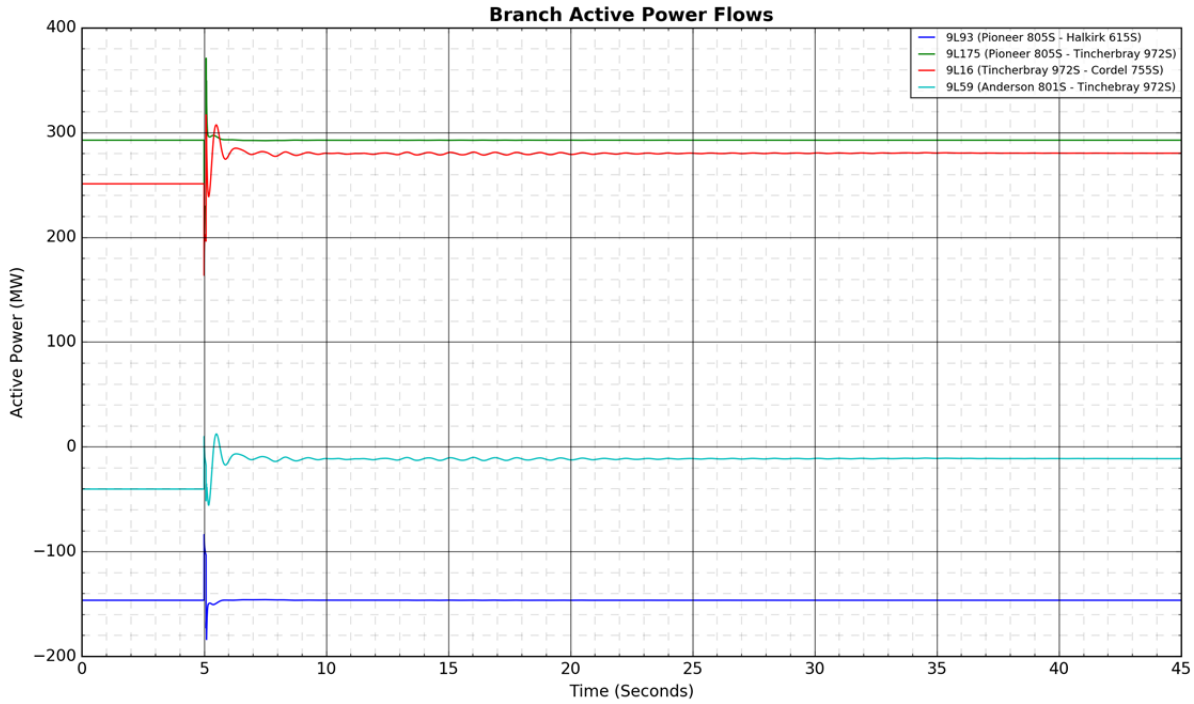
Branch Active Power Flows
9L93 (Pioneer 805S - Halkirk 615S)
9L175 (Pioneer 805S - Tincherbray 972S)
9L16 (Tincherbray 972S - Cordel 755S)
9L59 (Anderson 801S - Tinchebray 972S)
Active Power (MW)
Time (Seconds)

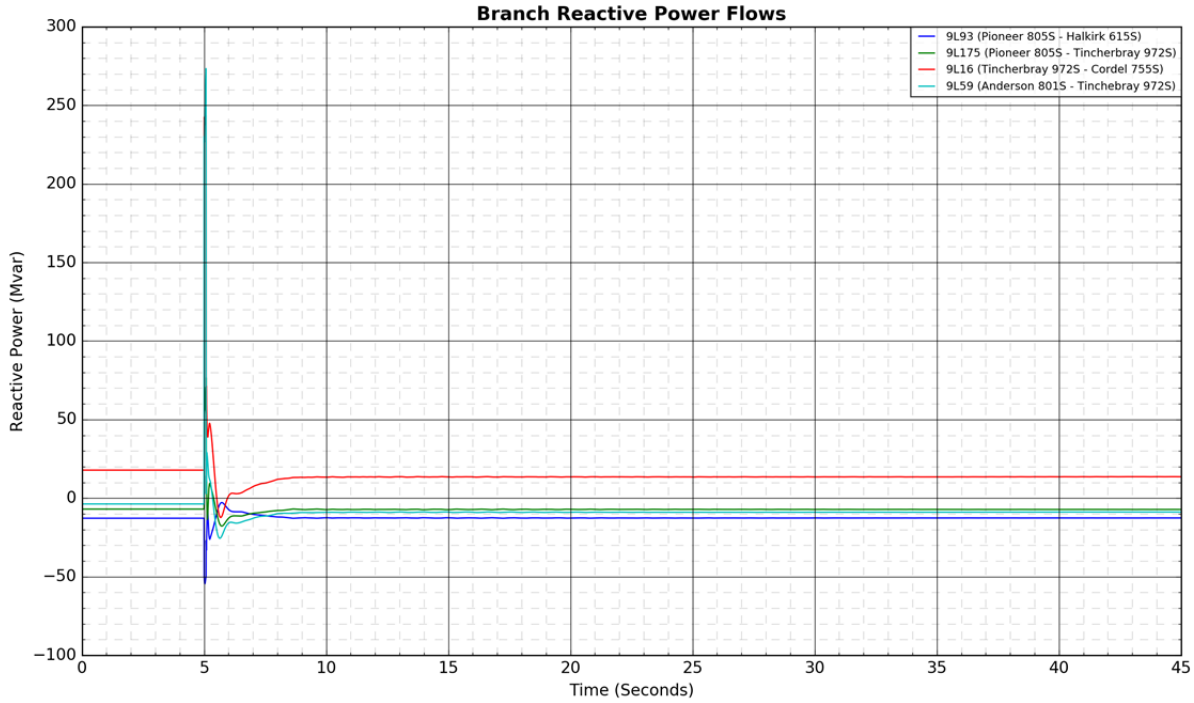
Branch Reactive Power Flows
9L93 (Pioneer 805S - Halkirk 615S)
9L175 (Pioneer 805S - Tincherbray 972S)
9L16 (Tincherbray 972S - Cordel 755S)
9L59 (Anderson 801S - Tinchebray 972S)
Reactive Power (Mvar)
Time (Seconds)

Figure A4-69: 912L\9L912 (Nevis 766S - Red Deer 63S): 3-phase fault at Nevis 766S

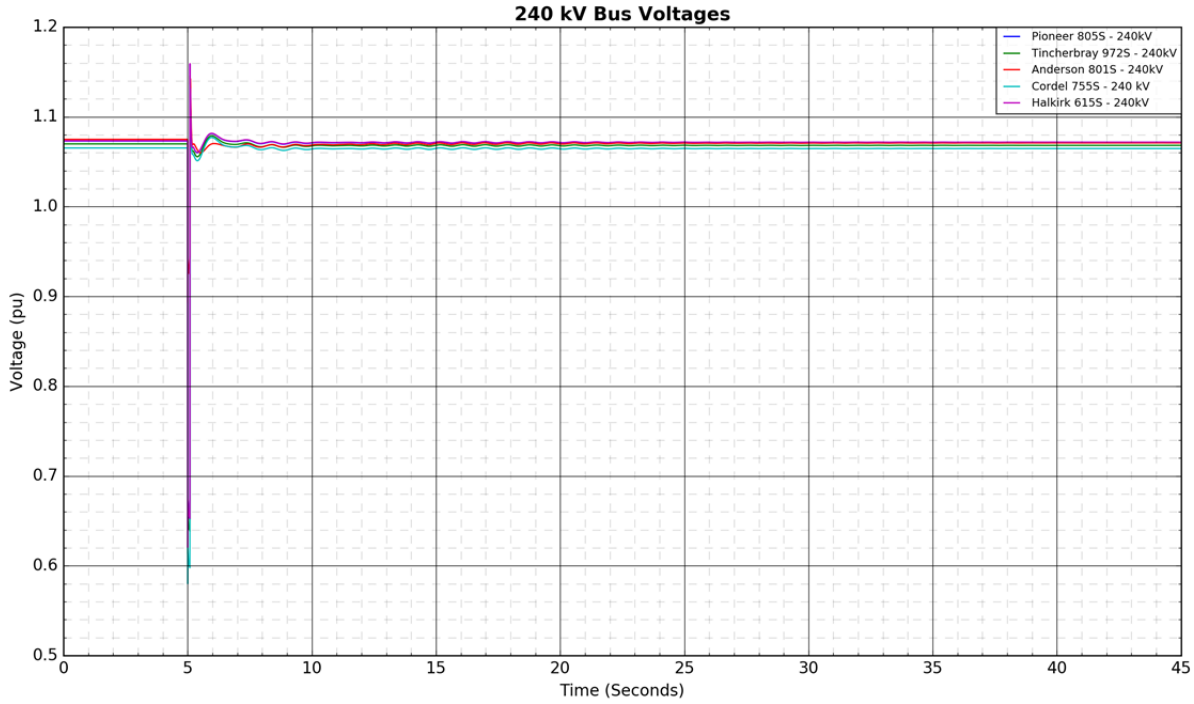

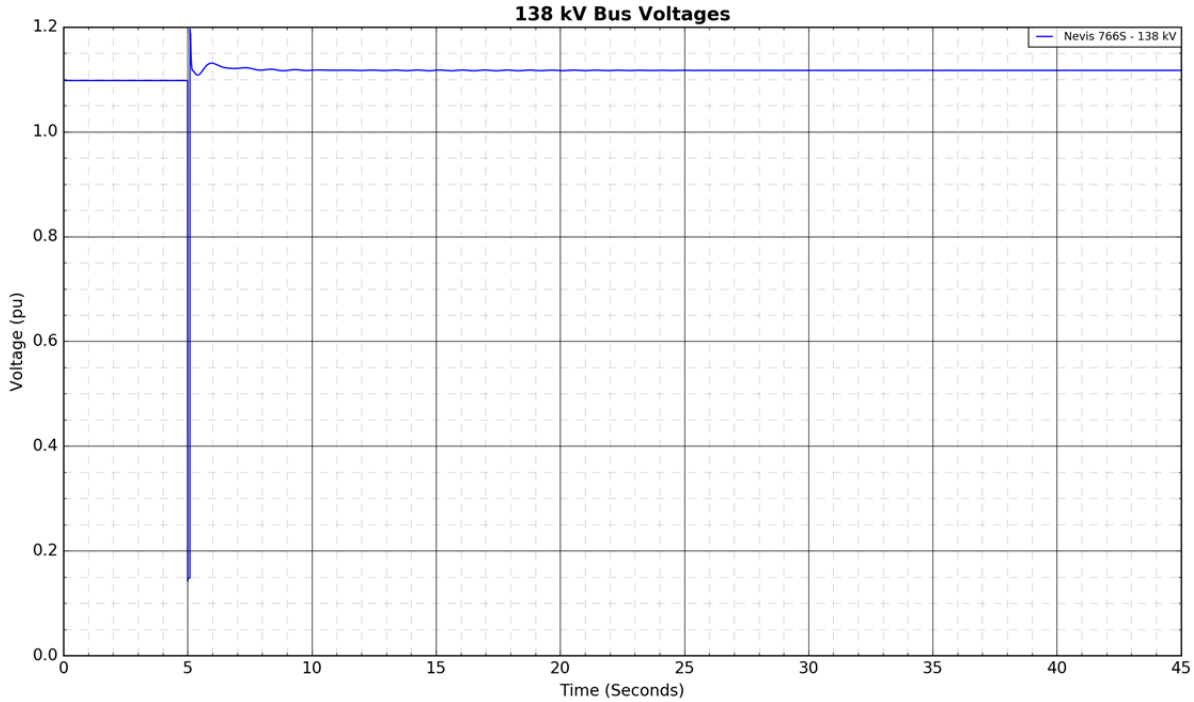

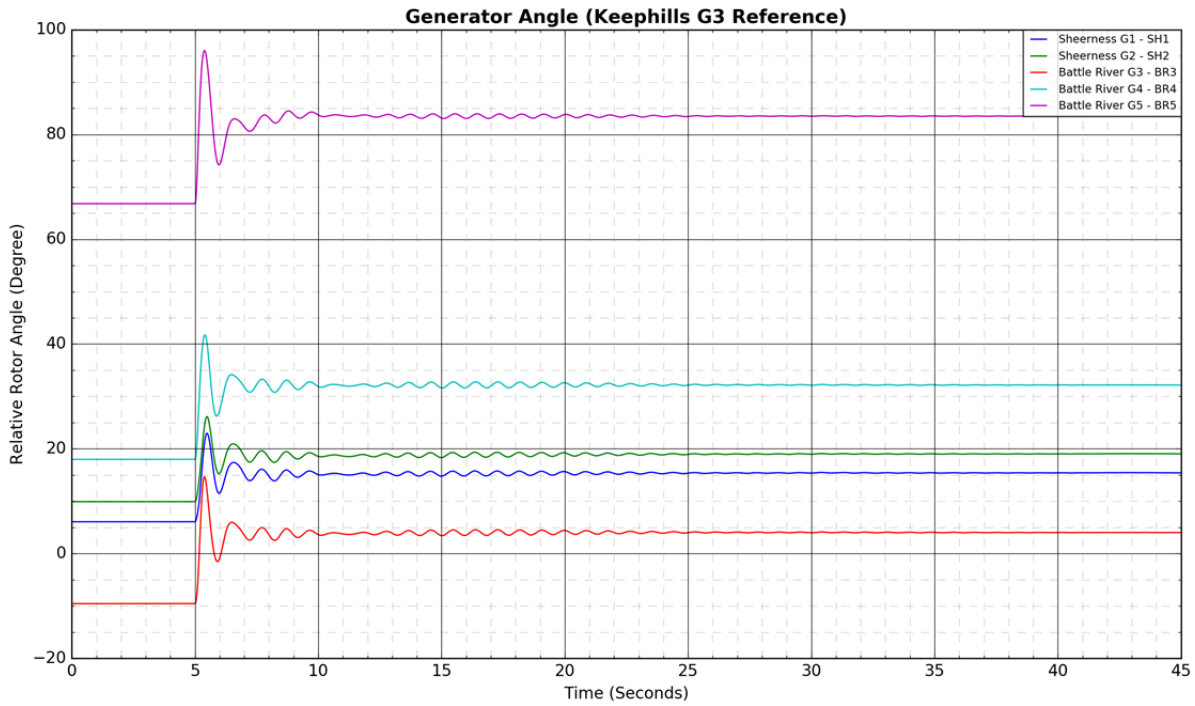
Generator Angle (Keephills G3 Reference)
Relative Rotor Angle (Degree)
Time (Seconds)
Sheerness G1 - SH1
Sheerness G2 - SH2
Battle River G3 - BR3
Battle River G4 - BR4
Battle River G5 - BR5

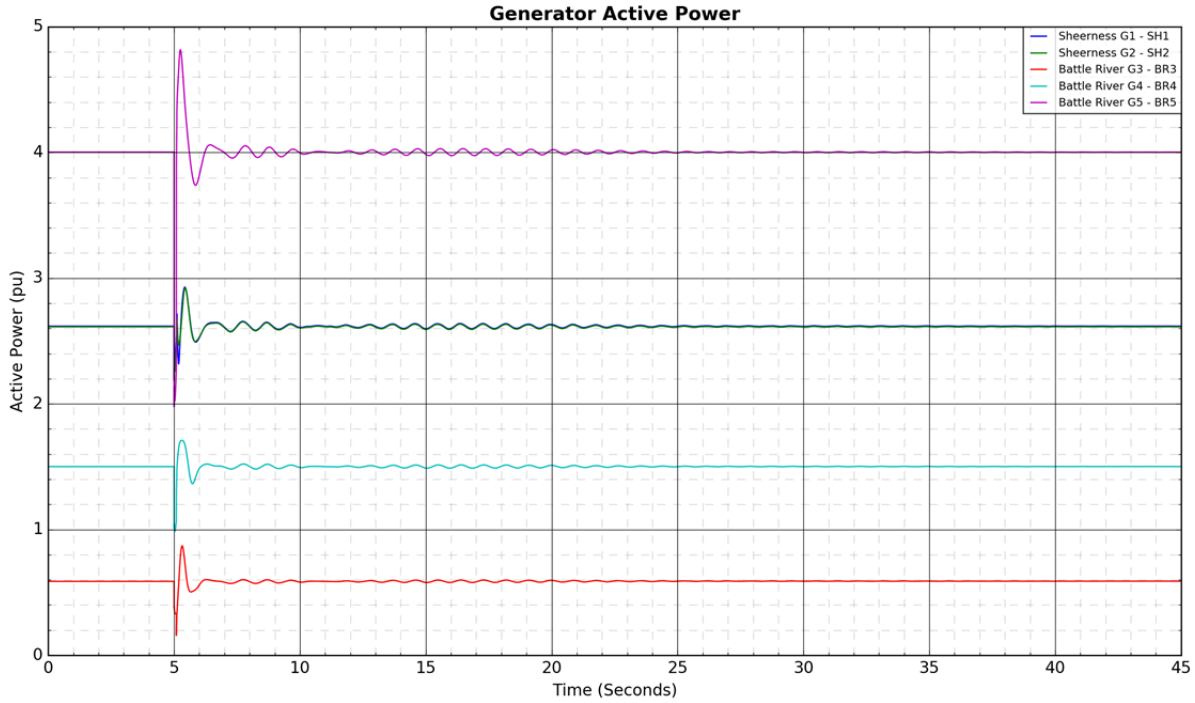
Generator Active Power
Active Power (pu)
Time (Seconds)
Sheerness G1 - SH1
Sheerness G2 - SH2
Battle River G3 - BR3
Battle River G4 - BR4
Battle River G5 - BR5

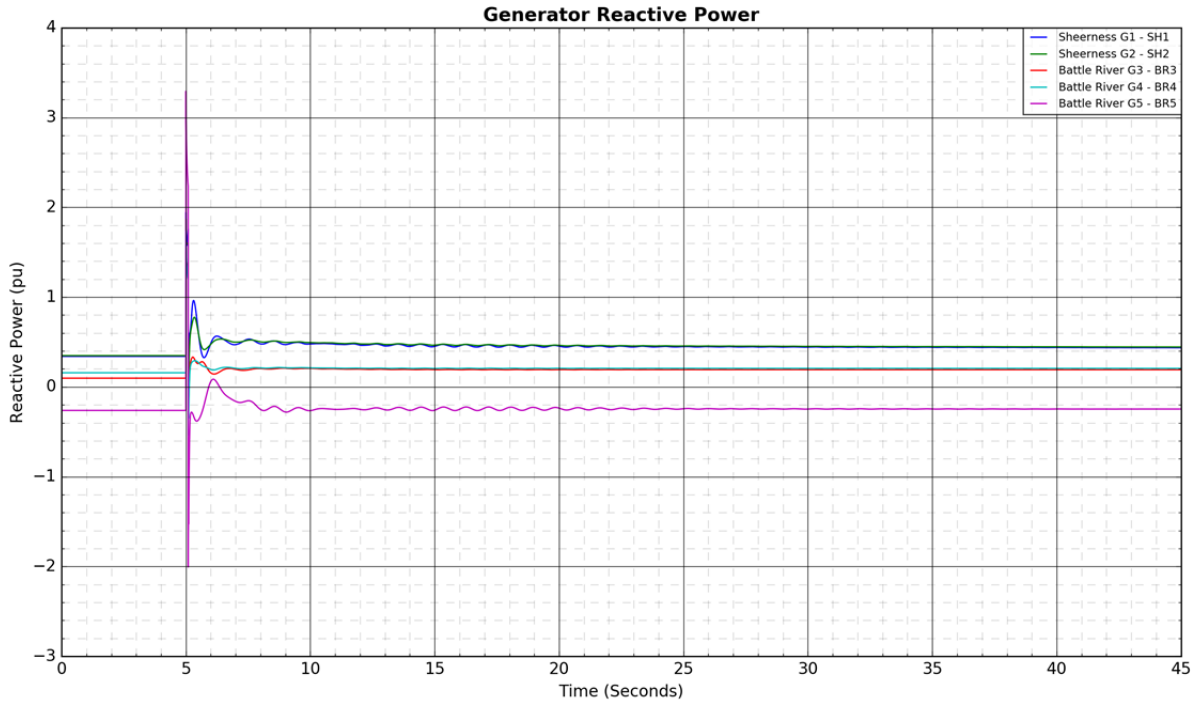
Generator Reactive Power
Sheerness G1 - SH1
Sheerness G2 - SH2
Battle River G3 - BR3
Battle River G4 - BR4
Battle River G5 - BR5
Reactive Power (pu)
Time (Seconds)

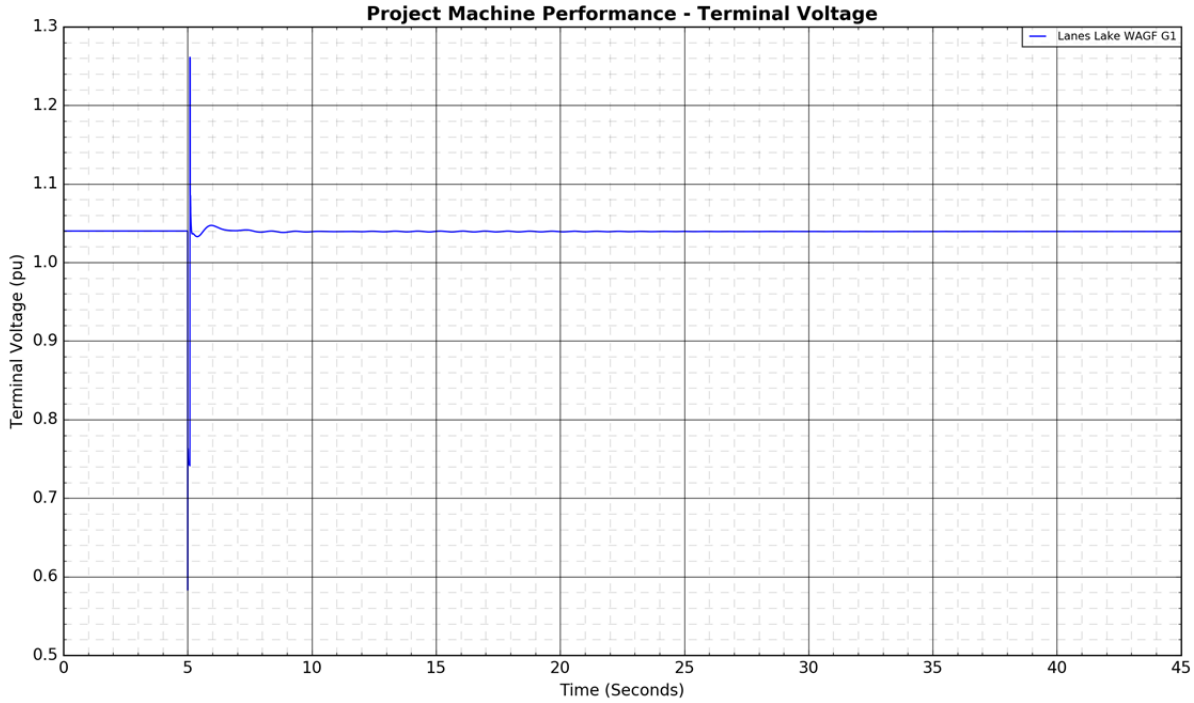
Project Machine Performance - Terminal Voltage
Lanes Lake WAGF G1
Terminal Voltage (pu)
Time (Seconds)


Project Machine Performance - Active Power
Lanes Lake WAGF G1
Active Power (pu)
Time (Seconds)
2.4
2.2
2.0
1.8
1.6
1.4
1.2
1.0
0.8
0
5
10
15
20
25
30
35
40
45

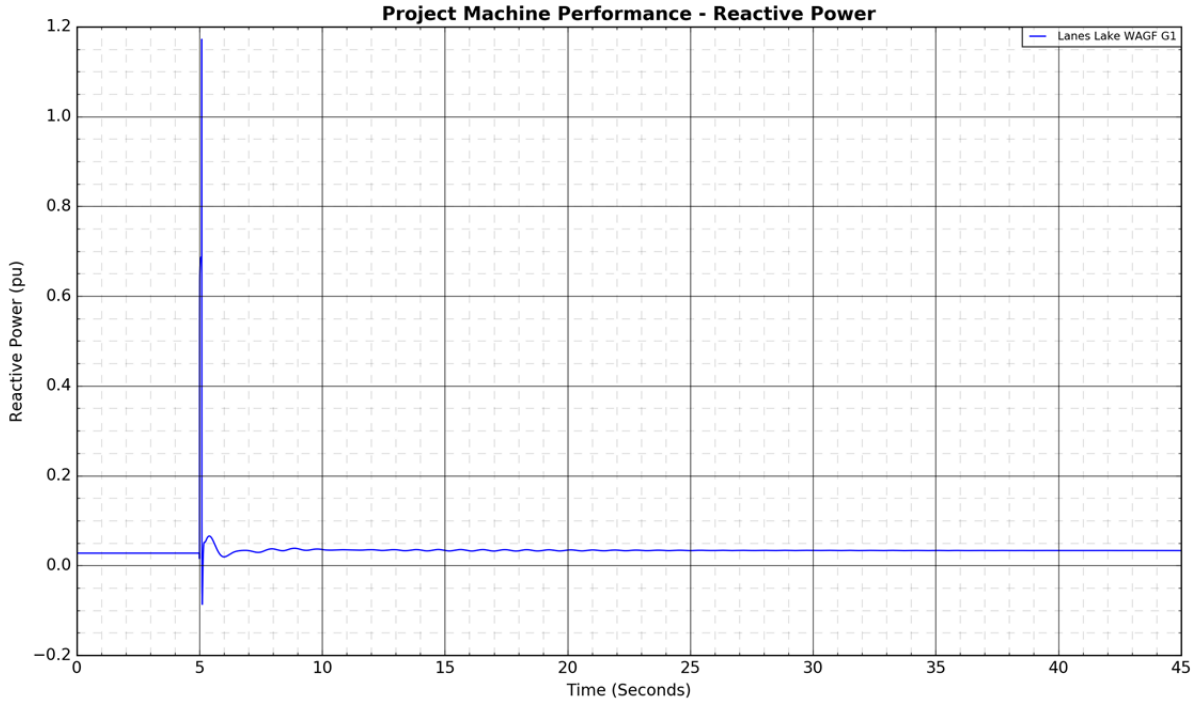
Project Machine Performance - Reactive Power
Lanes Lake WAGF G1
Reactive Power (pu)
Time (Seconds)
1.2
1.0
0.8
0.6
0.4
0.2
0.0
−0.2
0
5
10
15
20
25
30
35
40
45

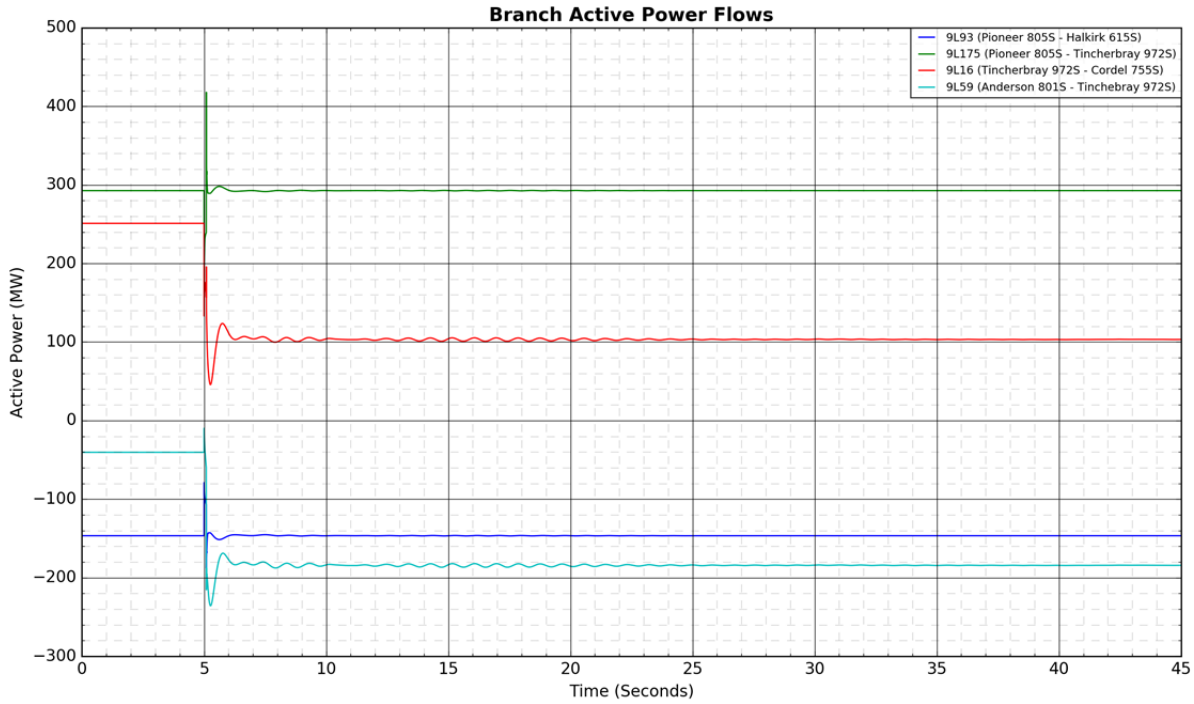
Branch Active Power Flows
9L93 (Pioneer 805S - Halkirk 615S)
9L175 (Pioneer 805S - Tincherbray 972S)
9L16 (Tincherbray 972S - Cordel 755S)
9L59 (Anderson 801S - Tinchebray 972S)
Active Power (MW)
Time (Seconds)

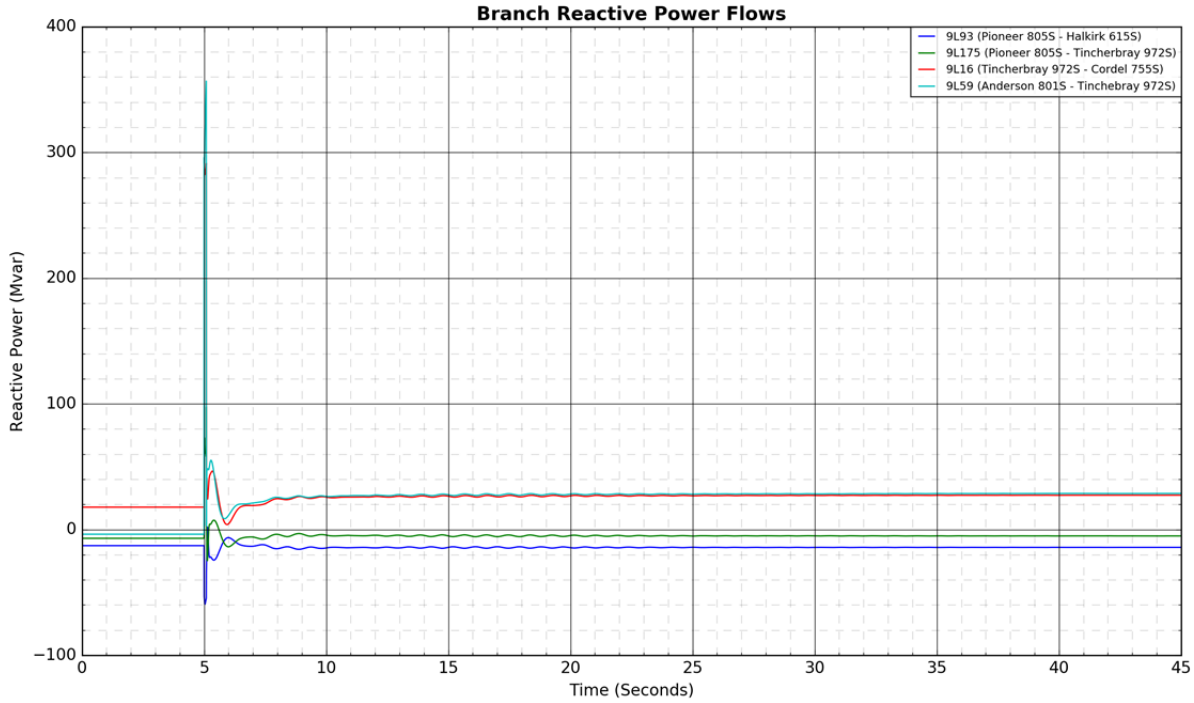
Branch Reactive Power Flows
9L93 (Pioneer 805S - Halkirk 615S)
9L175 (Pioneer 805S - Tincherbray 972S)
9L16 (Tincherbray 972S - Cordel 755S)
9L59 (Anderson 801S - Tinchebray 972S)
Reactive Power (Mvar)
Time (Seconds)

Figure A4-70: 912L\9L912 (Nevis 766S - Red Deer 63S): 3-phase fault at Red Deer 63S

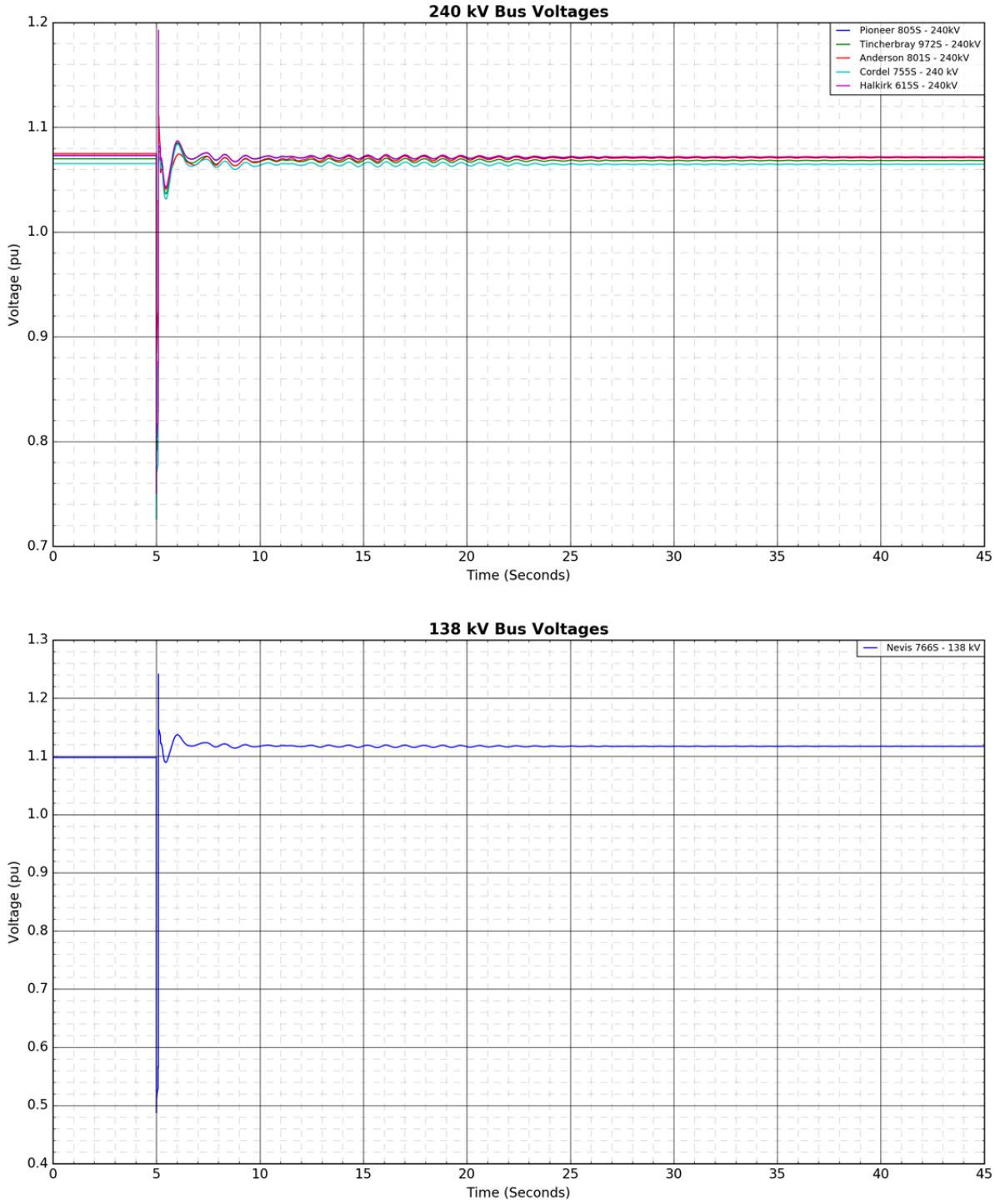

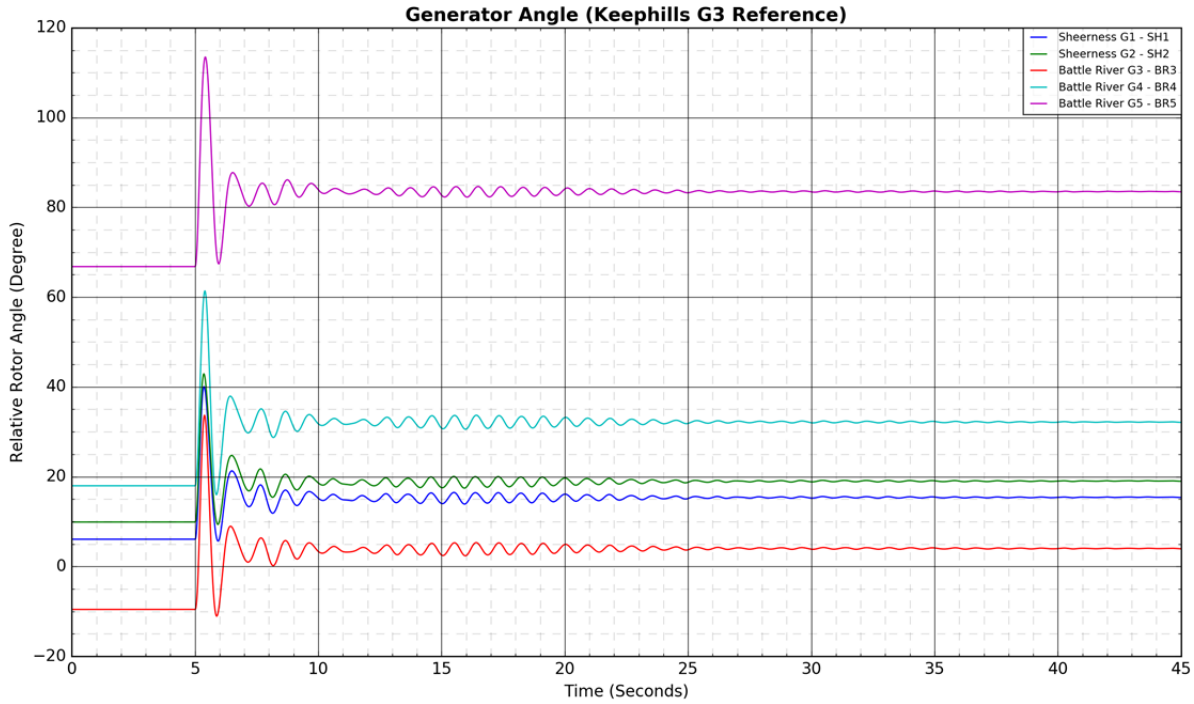
Generator Angle (Keephills G3 Reference)
Relative Rotor Angle (Degree)
Time (Seconds)
Sheerness G1 - SH1
Sheerness G2 - SH2
Battle River G3 - BR3
Battle River G4 - BR4
Battle River G5 - BR5

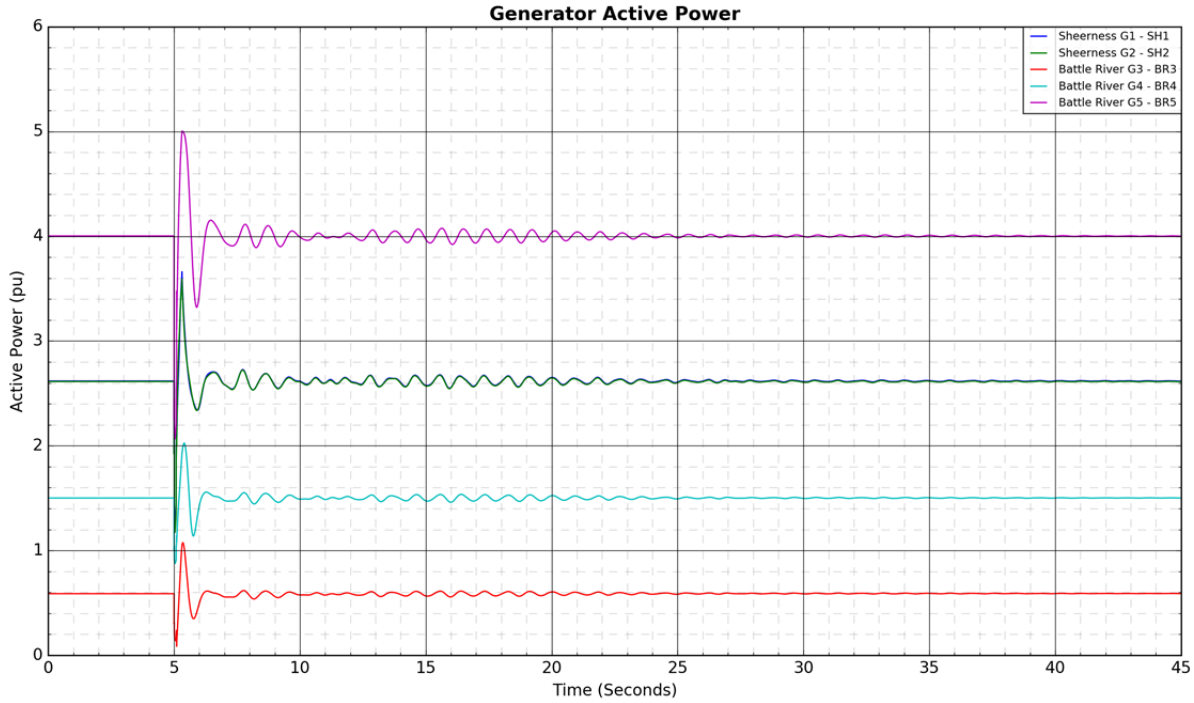
Generator Active Power
Active Power (pu)
Time (Seconds)
Sheerness G1 - SH1
Sheerness G2 - SH2
Battle River G3 - BR3
Battle River G4 - BR4
Battle River G5 - BR5

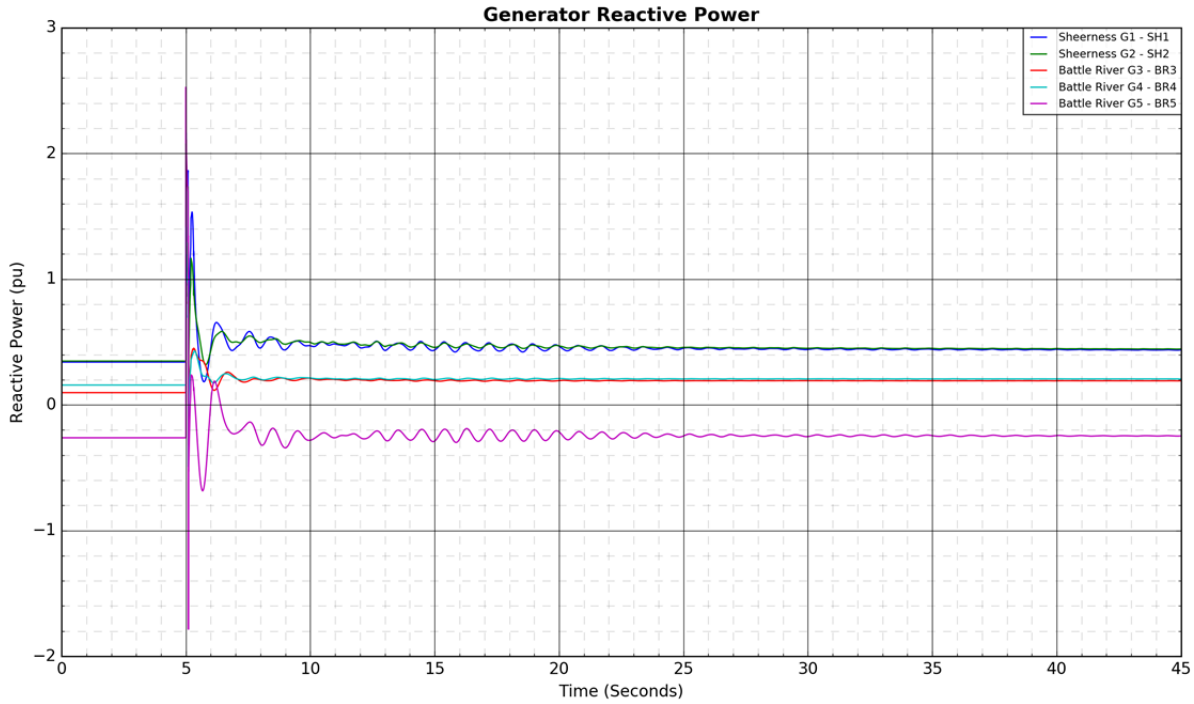
Generator Reactive Power
Sheerness G1 - SH1
Sheerness G2 - SH2
Battle River G3 - BR3
Battle River G4 - BR4
Battle River G5 - BR5
Reactive Power (pu)
Time (Seconds)

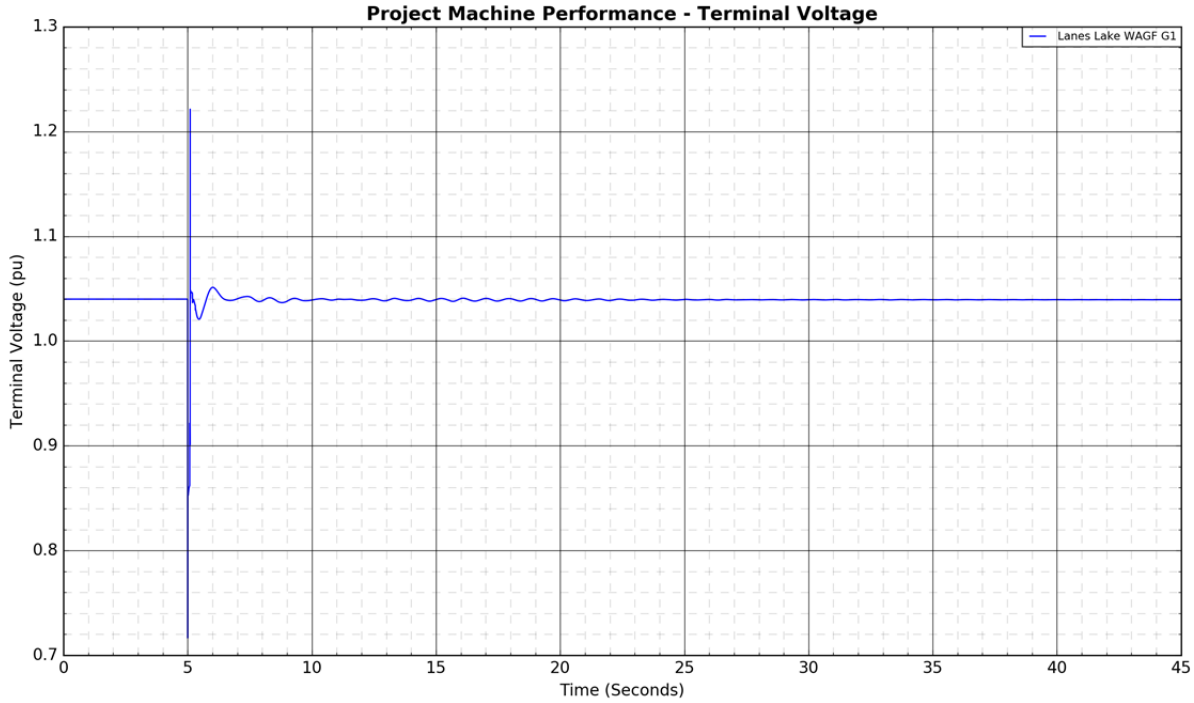
Project Machine Performance - Terminal Voltage
Lanes Lake WAGF G1
Terminal Voltage (pu)
Time (Seconds)


Project Machine Performance - Active Power
Lanes Lake WAGF G1
Active Power (pu)
Time (Seconds)
2.2
2.0
1.8
1.6
1.4
1.2
1.0
0
5
10
15
20
25
30
35
40
45

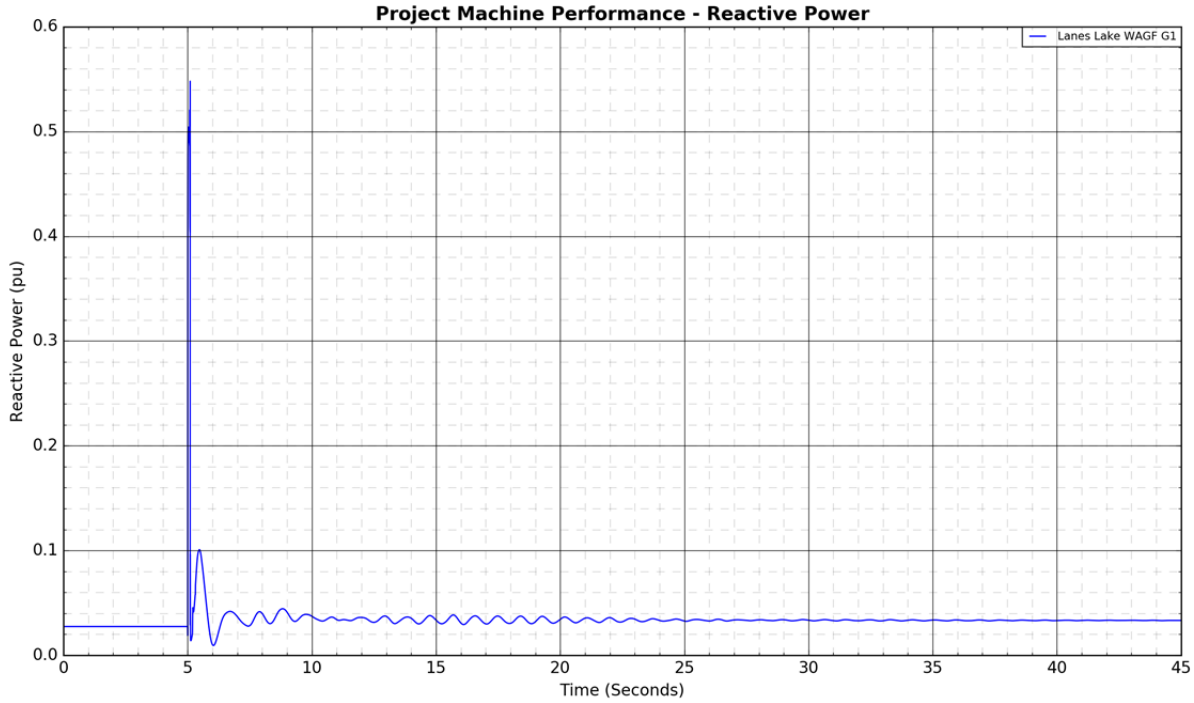
Project Machine Performance - Reactive Power
Lanes Lake WAGF G1
Reactive Power (pu)
Time (Seconds)
0.6
0.5
0.4
0.3
0.2
0.1
0.0
0
5
10
15
20
25
30
35
40
45

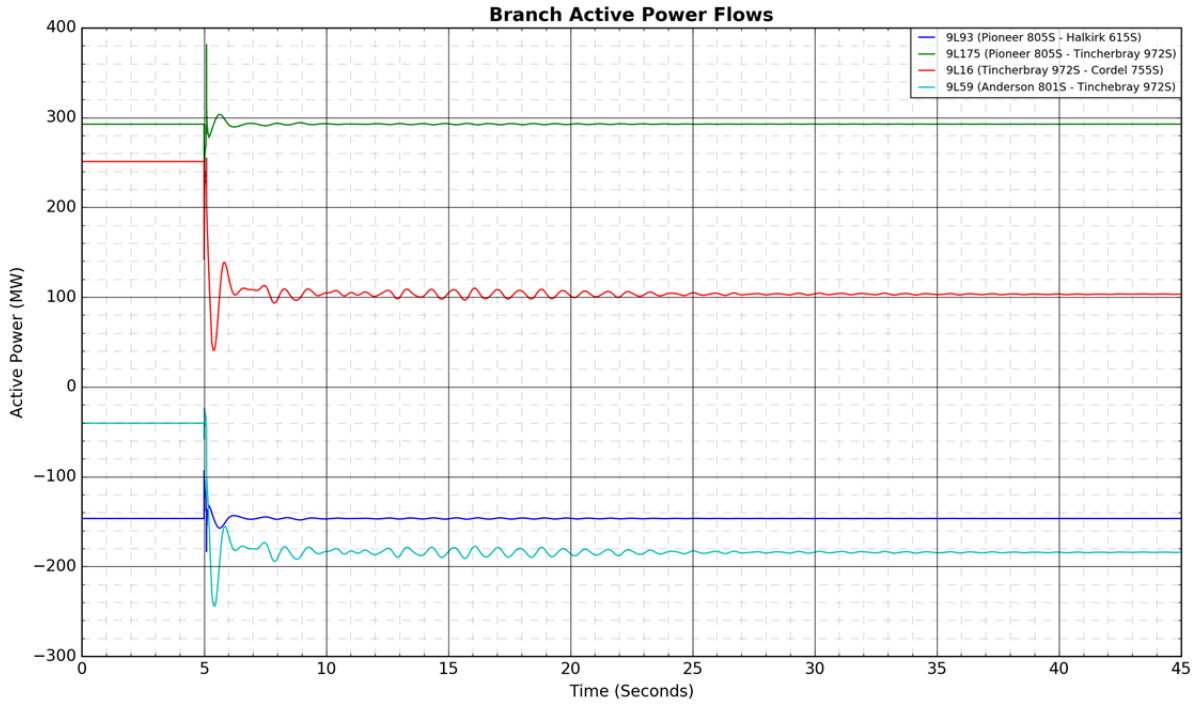
Branch Active Power Flows
9L93 (Pioneer 805S - Halkirk 615S)
9L175 (Pioneer 805S - Tincherbray 972S)
9L16 (Tincherbray 972S - Cordel 755S)
9L59 (Anderson 801S - Tinchebray 972S)
Active Power (MW)
Time (Seconds)

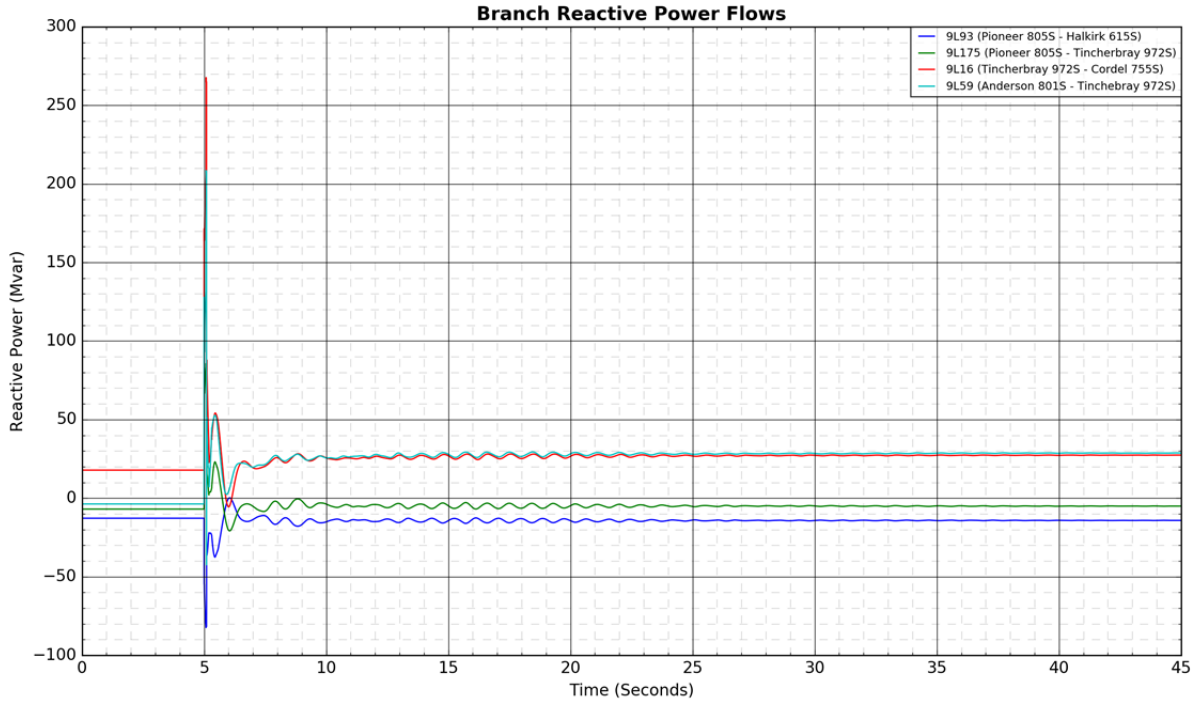
Branch Reactive Power Flows
9L93 (Pioneer 805S - Halkirk 615S)
9L175 (Pioneer 805S - Tincherbray 972S)
9L16 (Tincherbray 972S - Cordel 755S)
9L59 (Anderson 801S - Tinchebray 972S)
Reactive Power (Mvar)
Time (Seconds)

6. Stability Results 2019 Winter Peak - Case B

Figure A4-71: 9L24 (Oakland 946S - Lanfine 959S): 3-phase fault at Oakland 946S



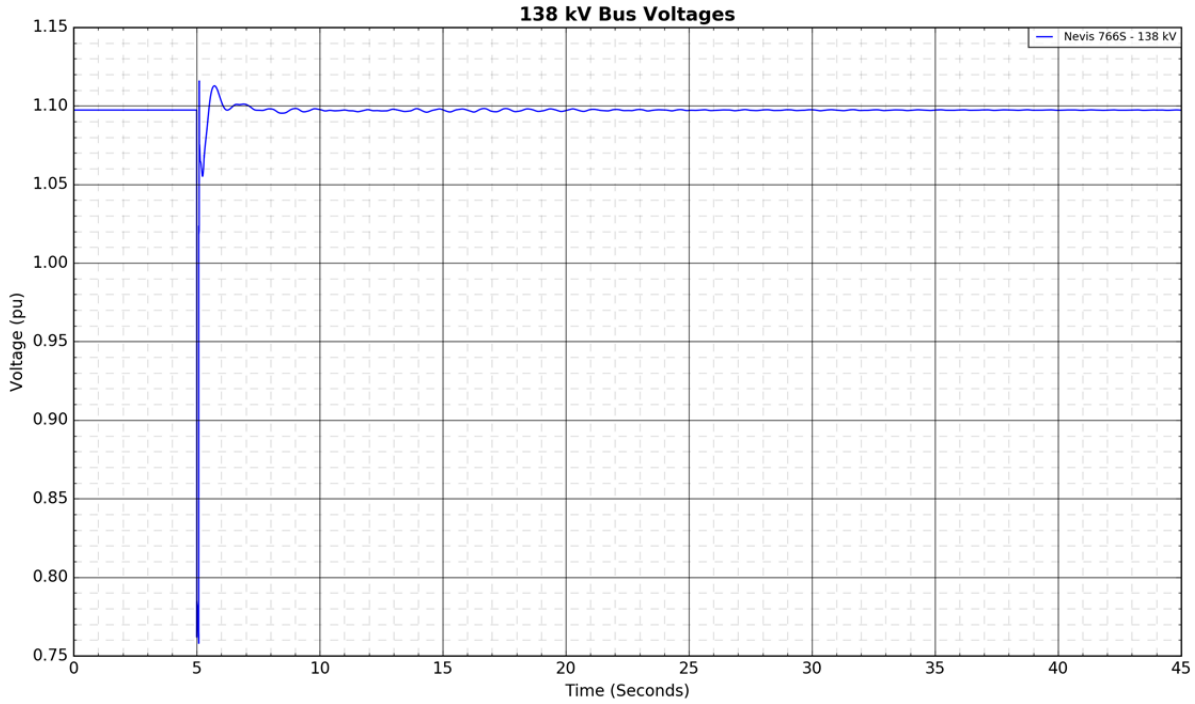

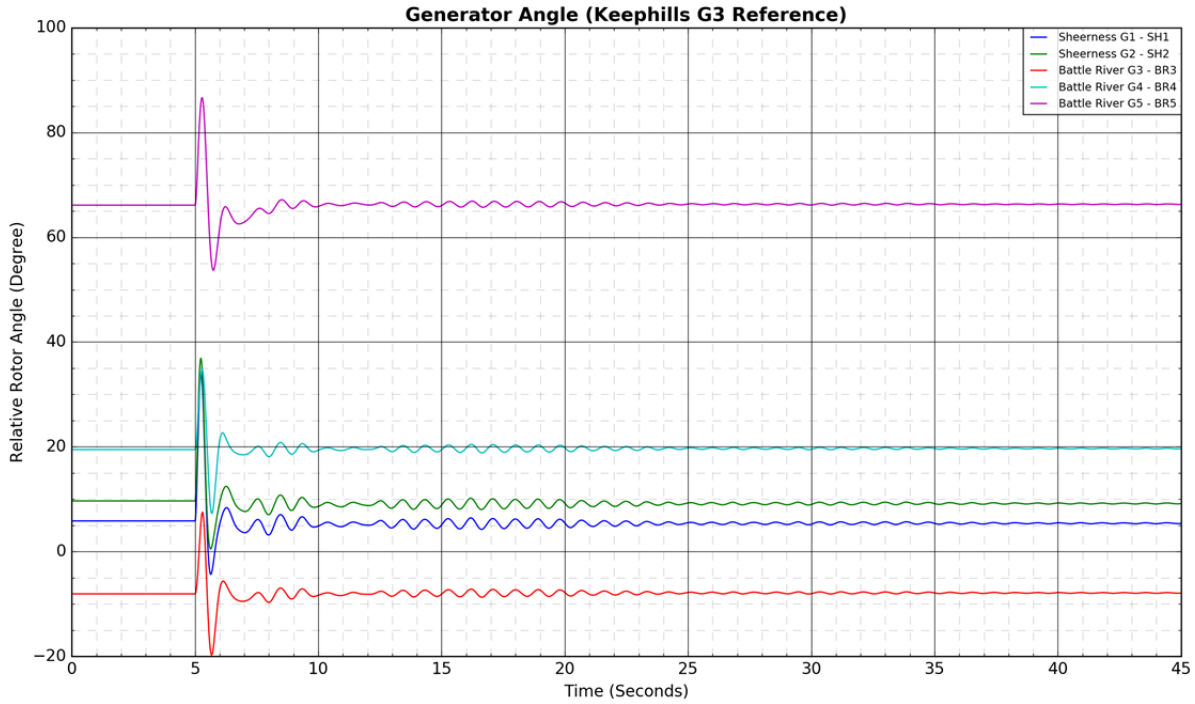
Generator Angle (Keephills G3 Reference)
Relative Rotor Angle (Degree)
Time (Seconds)
Sheerness G1 - SH1
Sheerness G2 - SH2
Battle River G3 - BR3
Battle River G4 - BR4
Battle River G5 - BR5

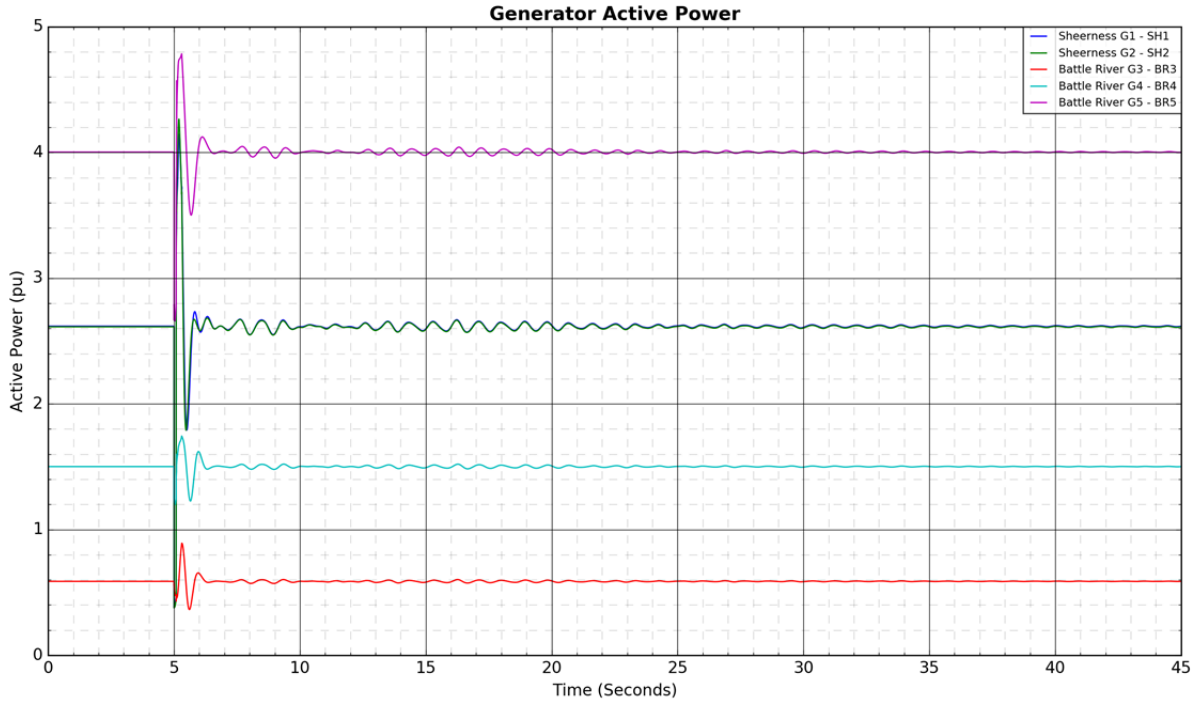
Generator Active Power
Active Power (pu)
Time (Seconds)
Sheerness G1 - SH1
Sheerness G2 - SH2
Battle River G3 - BR3
Battle River G4 - BR4
Battle River G5 - BR5

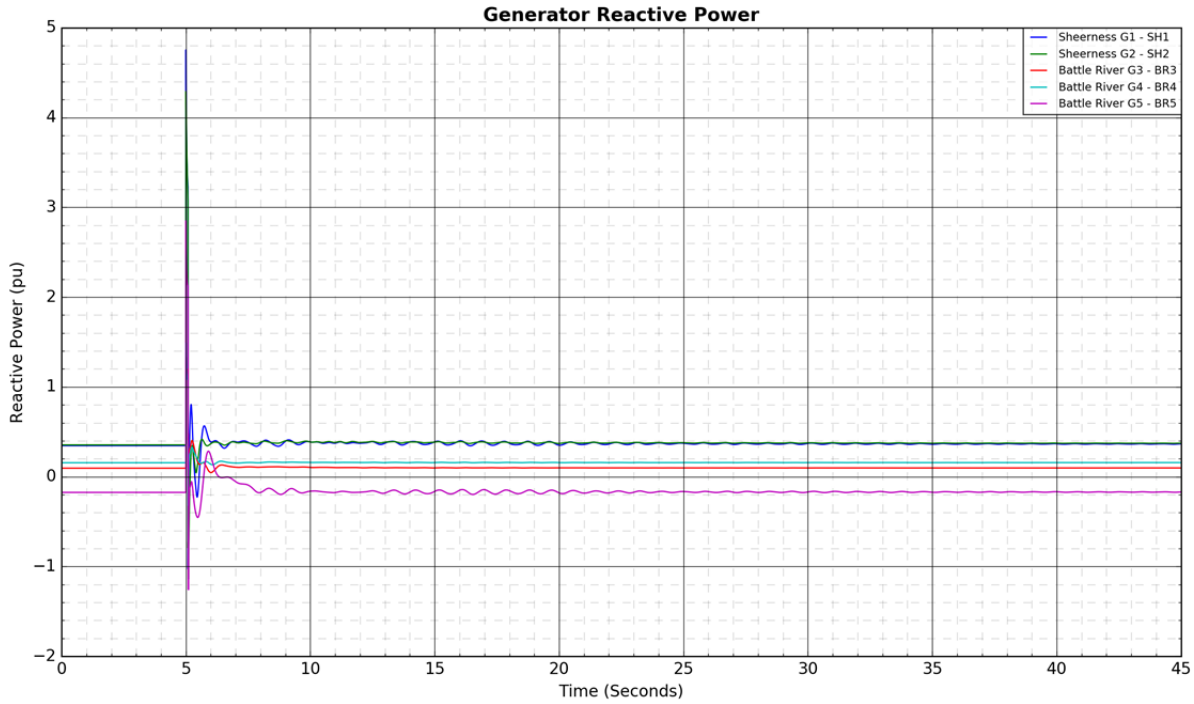
Generator Reactive Power
Sheerness G1 - SH1
Sheerness G2 - SH2
Battle River G3 - BR3
Battle River G4 - BR4
Battle River G5 - BR5
Reactive Power (pu)
Time (Seconds)

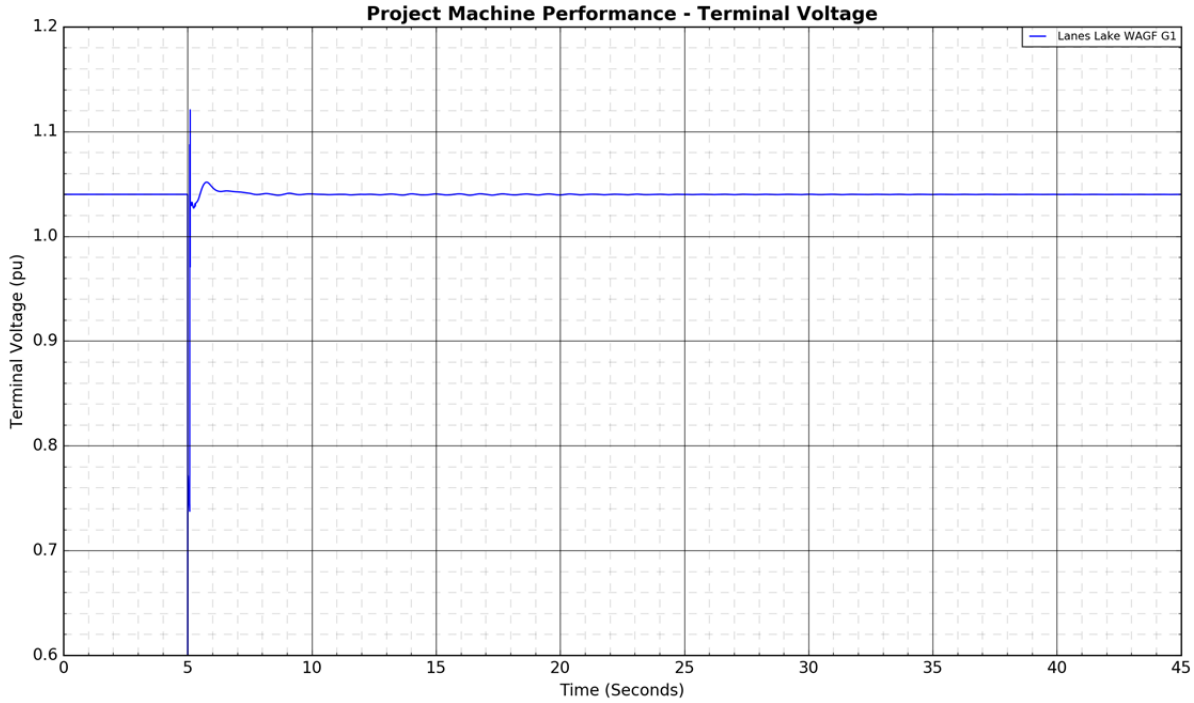
Project Machine Performance - Terminal Voltage
Lanes Lake WAGF G1
Terminal Voltage (pu)
Time (Seconds)


Project Machine Performance - Active Power
Lanes Lake WAGF G1
Active Power (pu)
Time (Seconds)
2.2
2.0
1.8
1.6
1.4
1.2
1.0
0.8
0
5
10
15
20
25
30
35
40
45

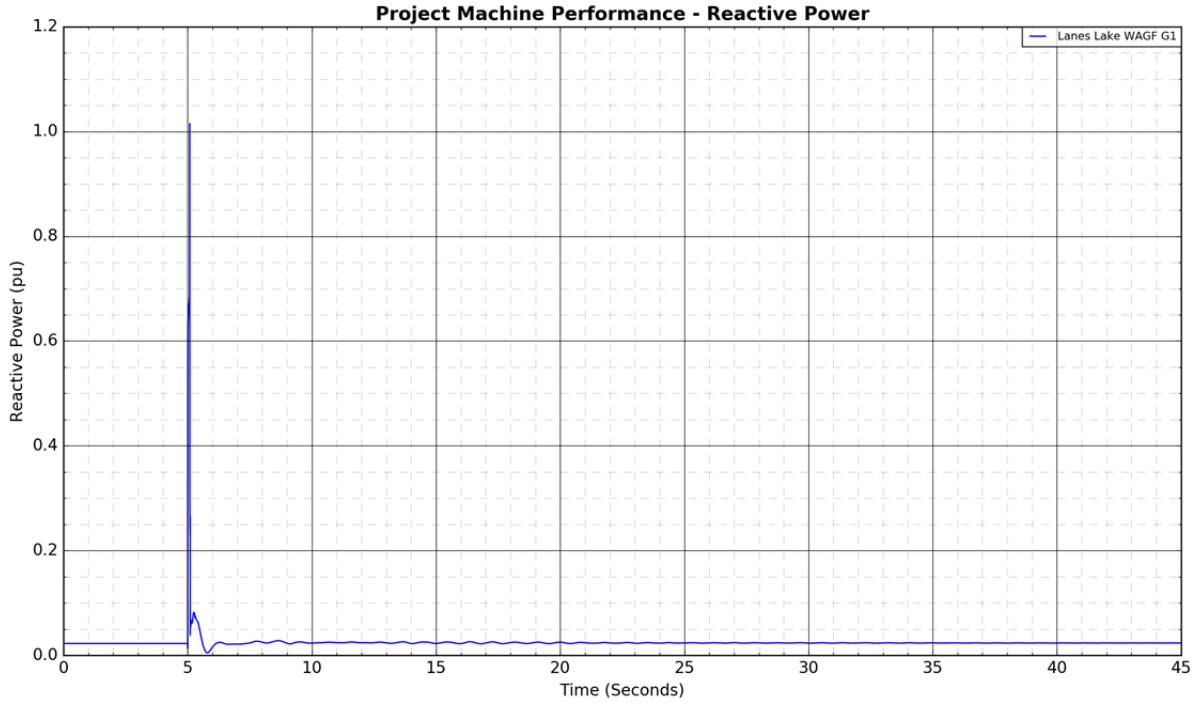
Project Machine Performance - Reactive Power
Lanes Lake WAGF G1
Reactive Power (pu)
Time (Seconds)
1.2
1.0
0.8
0.6
0.4
0.2
0.0
0
5
10
15
20
25
30
35
40
45

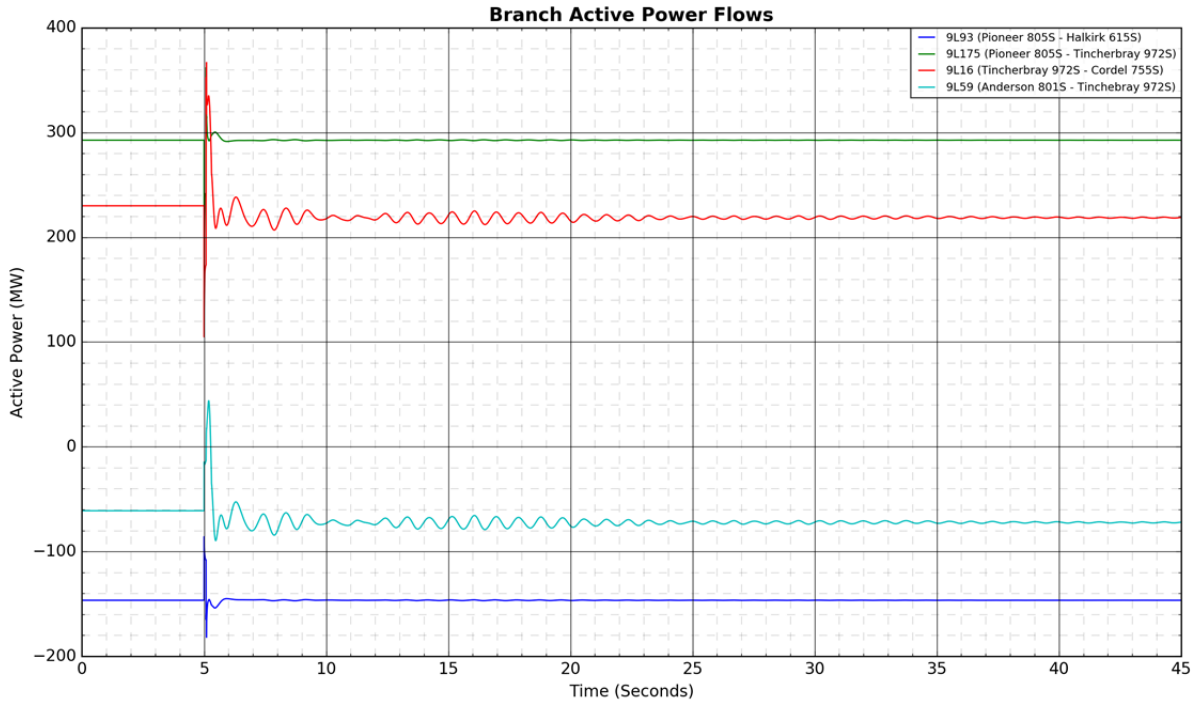
Branch Active Power Flows
9L93 (Pioneer 805S - Halkirk 615S)
9L175 (Pioneer 805S - Tincherbray 972S)
9L16 (Tincherbray 972S - Cordel 755S)
9L59 (Anderson 801S - Tinchebray 972S)
Active Power (MW)
Time (Seconds)

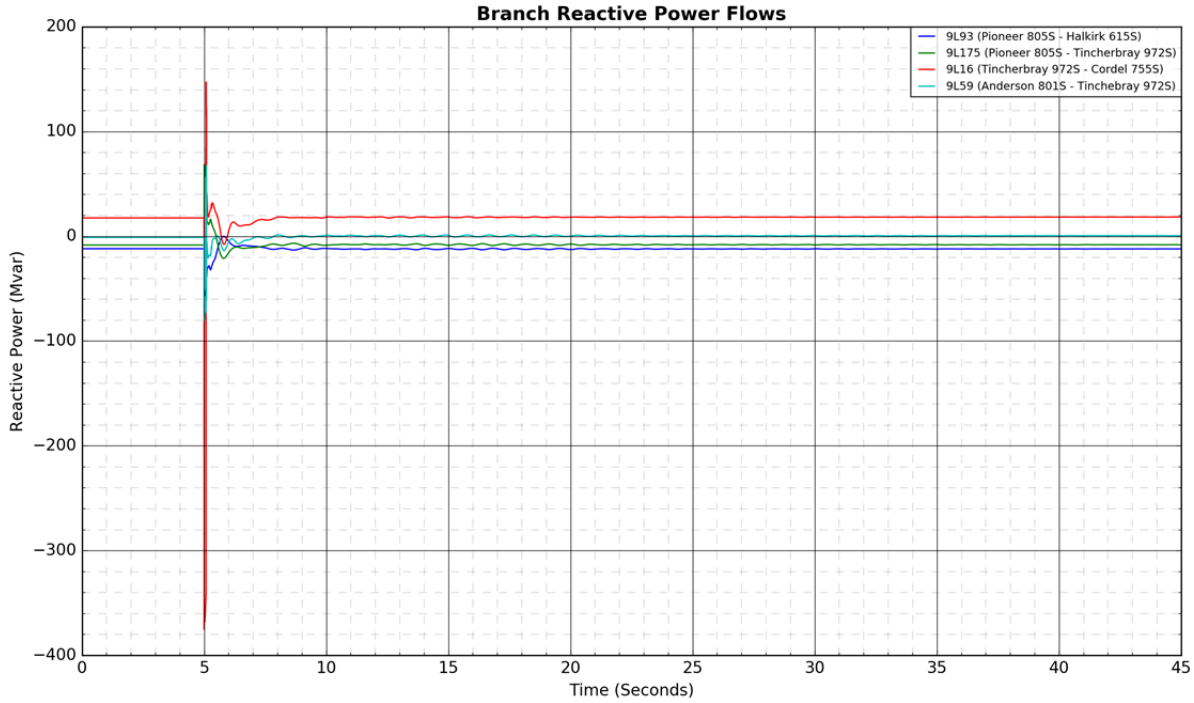
Branch Reactive Power Flows
9L93 (Pioneer 805S - Halkirk 615S)
9L175 (Pioneer 805S - Tincherbray 972S)
9L16 (Tincherbray 972S - Cordel 755S)
9L59 (Anderson 801S - Tinchebray 972S)
Reactive Power (Mvar)
Time (Seconds)

Figure A4-69: 912L\9L912 (Nevis 766S - Red Deer 63S): 3-phase fault at Nevis 766S

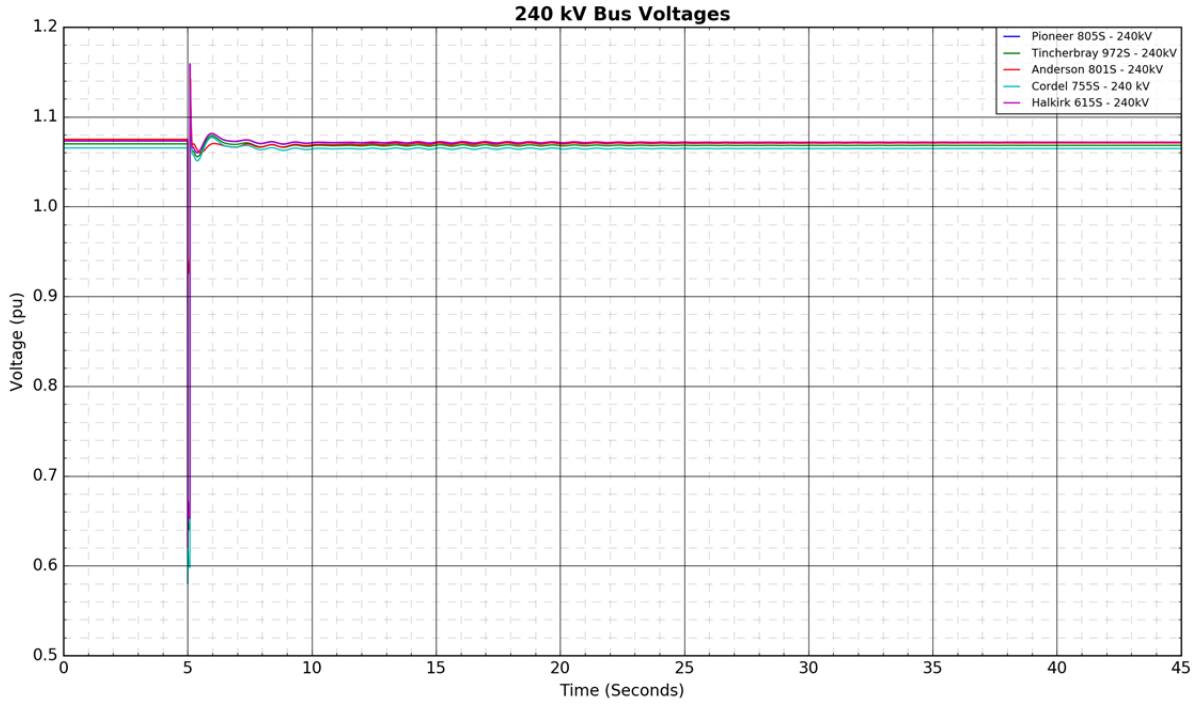

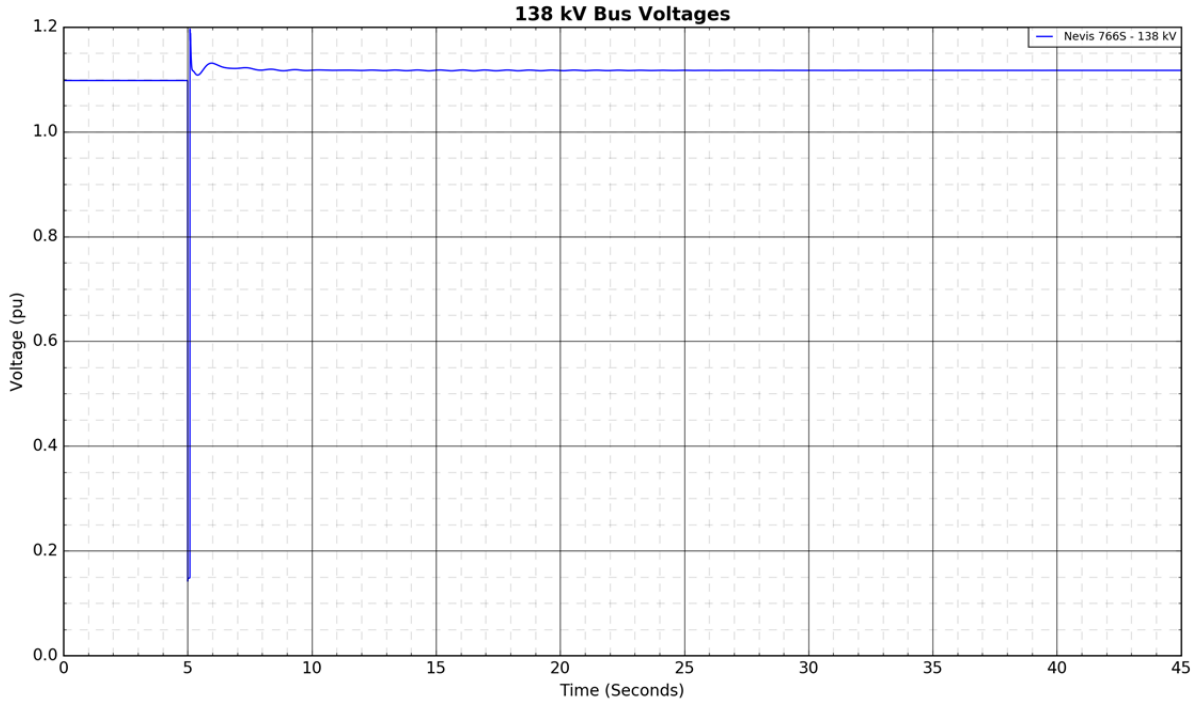

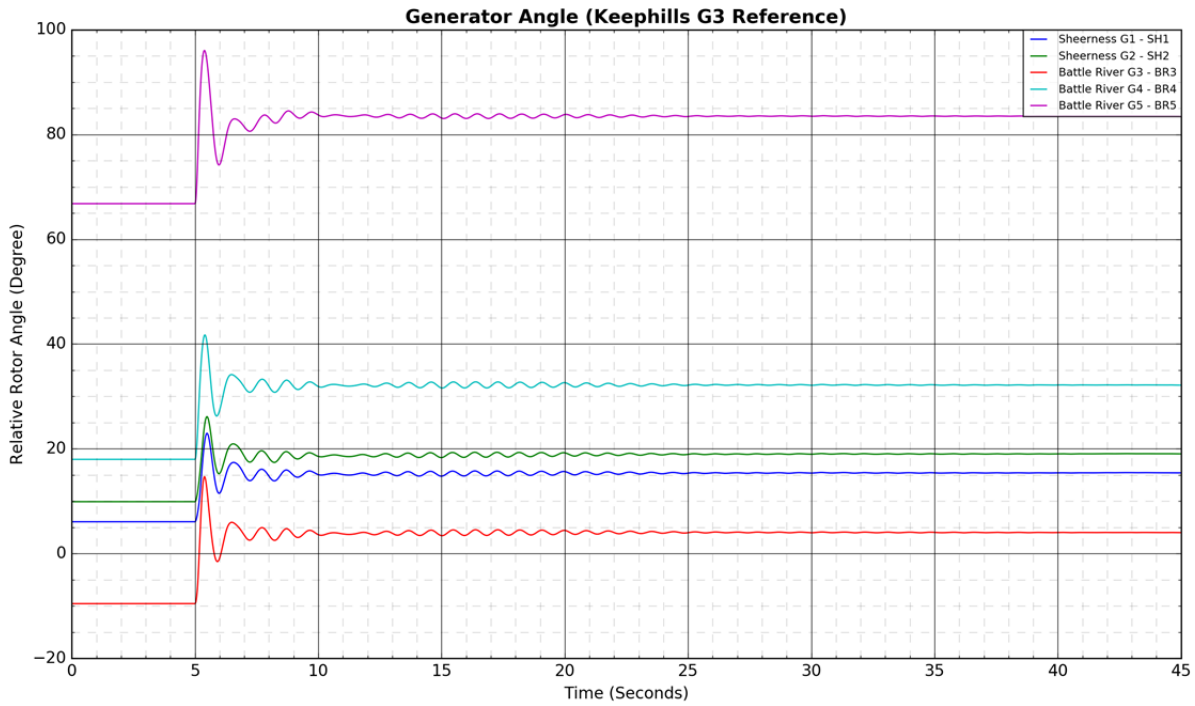
Generator Angle (Keephills G3 Reference)
Relative Rotor Angle (Degree)
Time (Seconds)
Sheerness G1 - SH1
Sheerness G2 - SH2
Battle River G3 - BR3
Battle River G4 - BR4
Battle River G5 - BR5

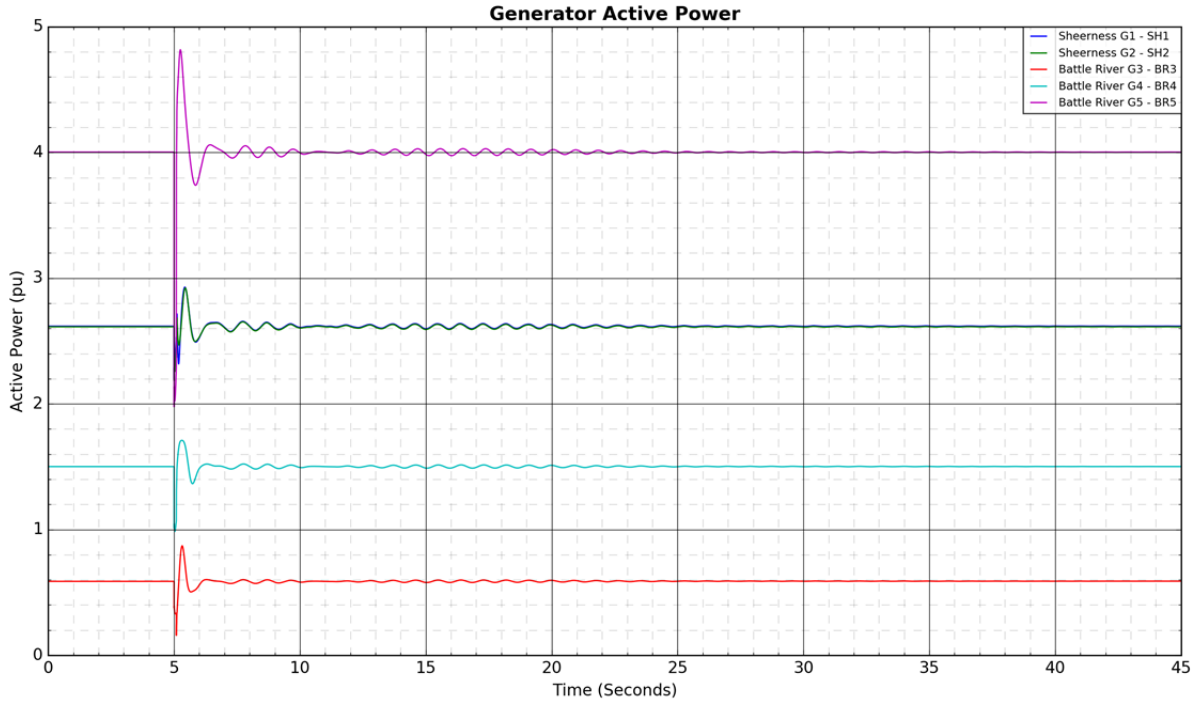
Generator Active Power
Active Power (pu)
Time (Seconds)
Sheerness G1 - SH1
Sheerness G2 - SH2
Battle River G3 - BR3
Battle River G4 - BR4
Battle River G5 - BR5

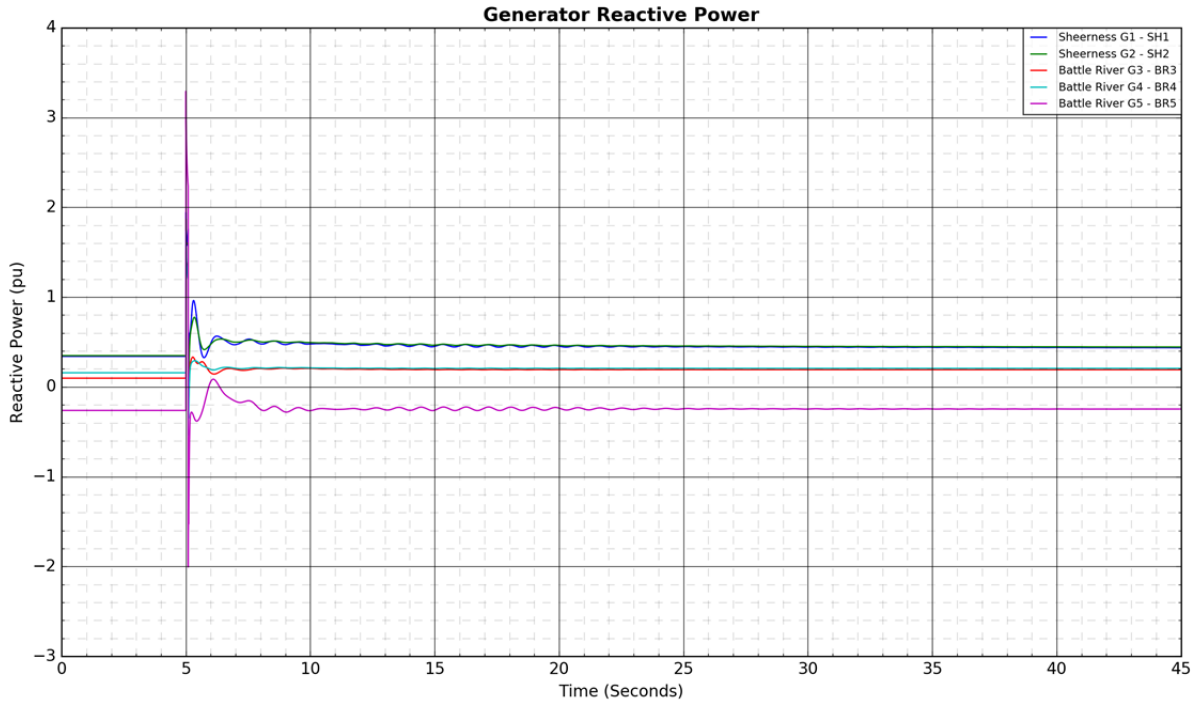
Generator Reactive Power
Sheerness G1 - SH1
Sheerness G2 - SH2
Battle River G3 - BR3
Battle River G4 - BR4
Battle River G5 - BR5
Reactive Power (pu)
Time (Seconds)

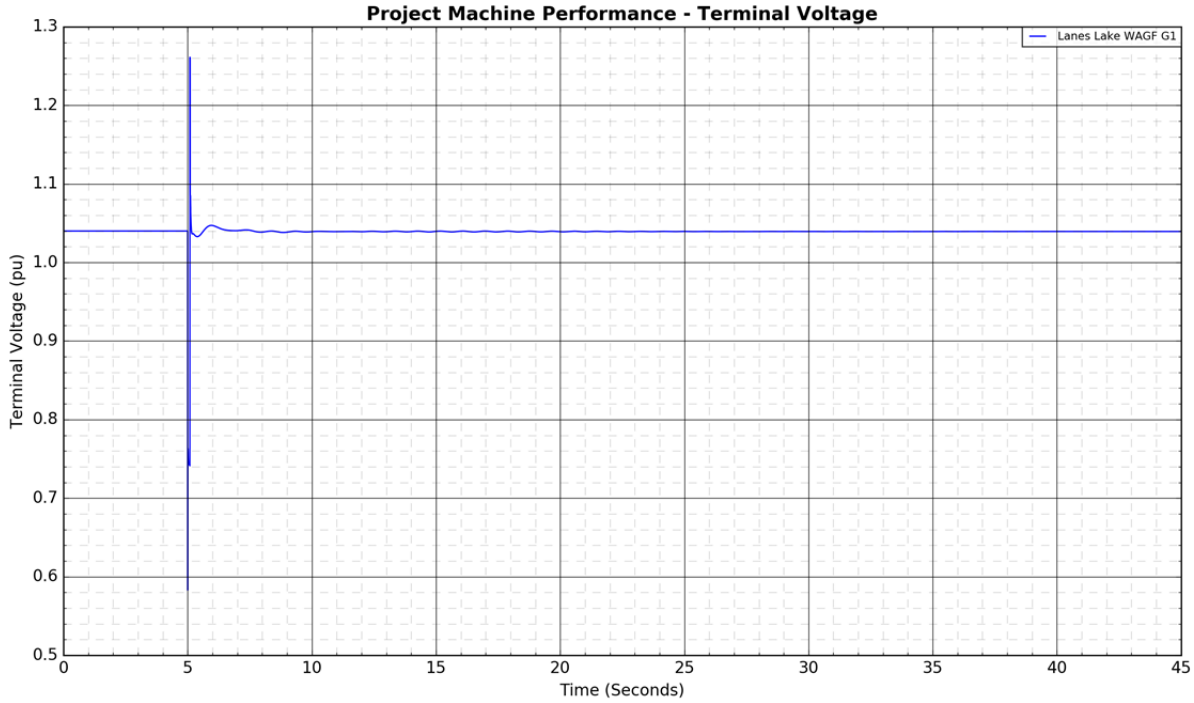
Project Machine Performance - Terminal Voltage
Lanes Lake WAGF G1
Terminal Voltage (pu)
Time (Seconds)


Project Machine Performance - Active Power
Lanes Lake WAGF G1
Active Power (pu)
Time (Seconds)
2.4
2.2
2.0
1.8
1.6
1.4
1.2
1.0
0.8
0
5
10
15
20
25
30
35
40
45

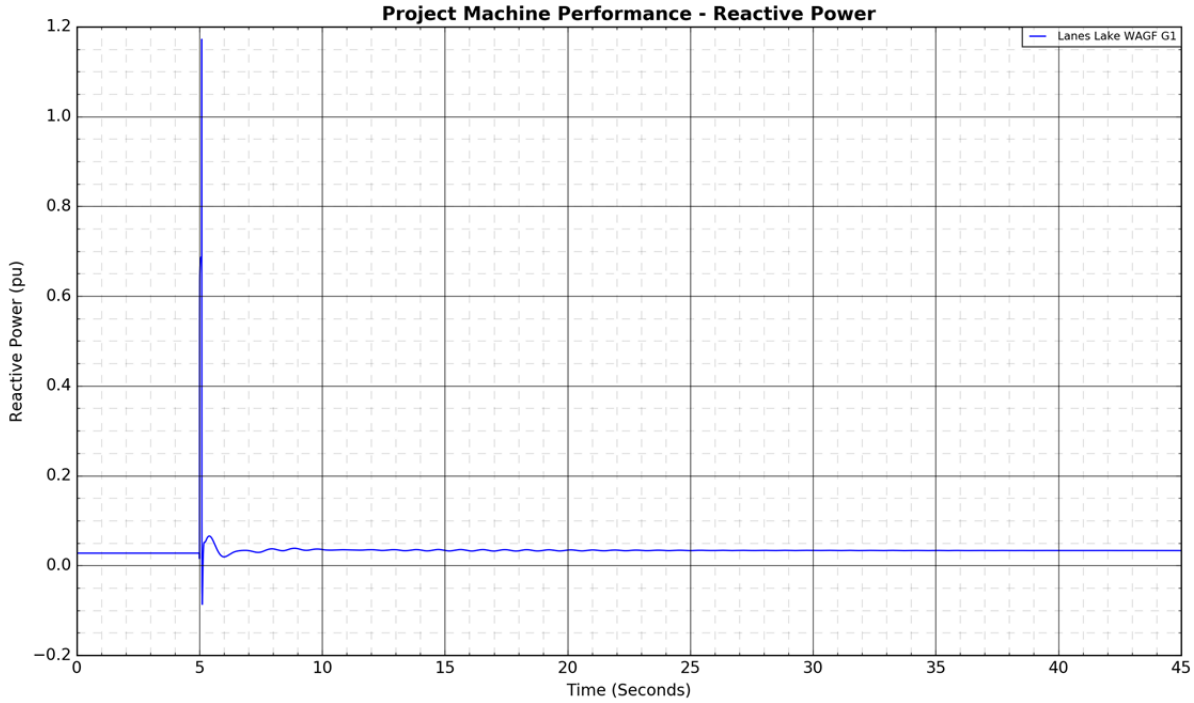
Project Machine Performance - Reactive Power
Lanes Lake WAGF G1
Reactive Power (pu)
Time (Seconds)
1.2
1.0
0.8
0.6
0.4
0.2
0.0
−0.2
0
5
10
15
20
25
30
35
40
45

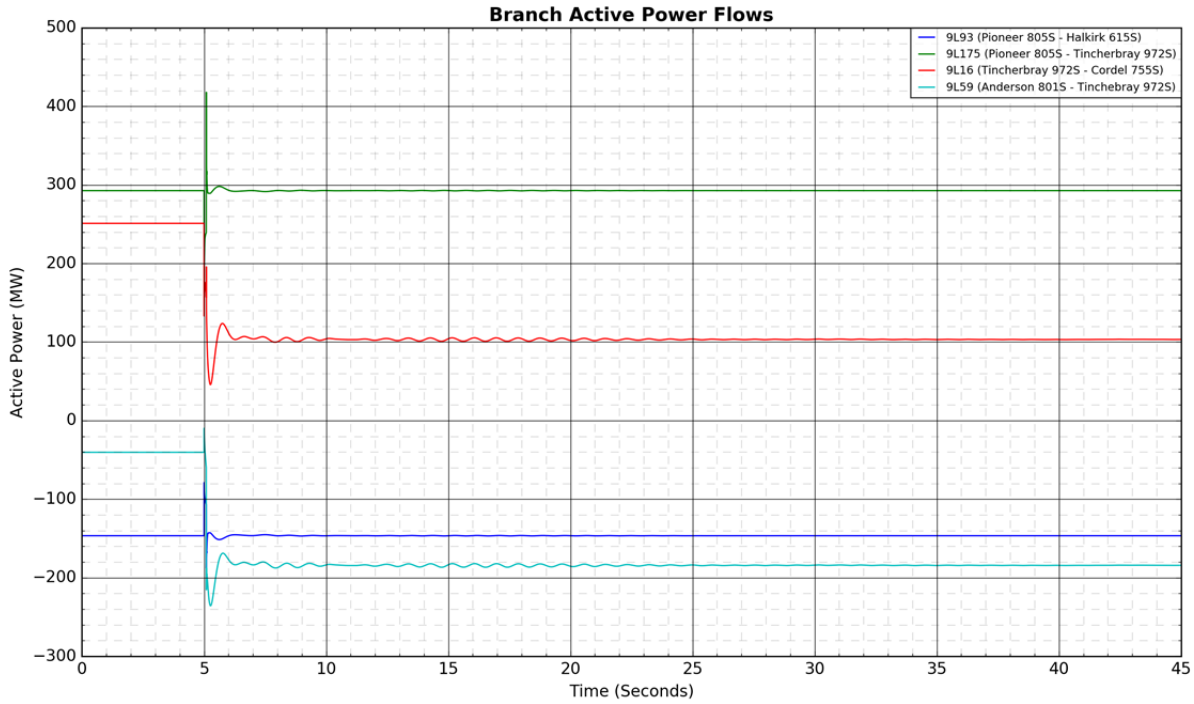
Branch Active Power Flows
9L93 (Pioneer 805S - Halkirk 615S)
9L175 (Pioneer 805S - Tincherbray 972S)
9L16 (Tincherbray 972S - Cordel 755S)
9L59 (Anderson 801S - Tinchebray 972S)
Active Power (MW)
Time (Seconds)

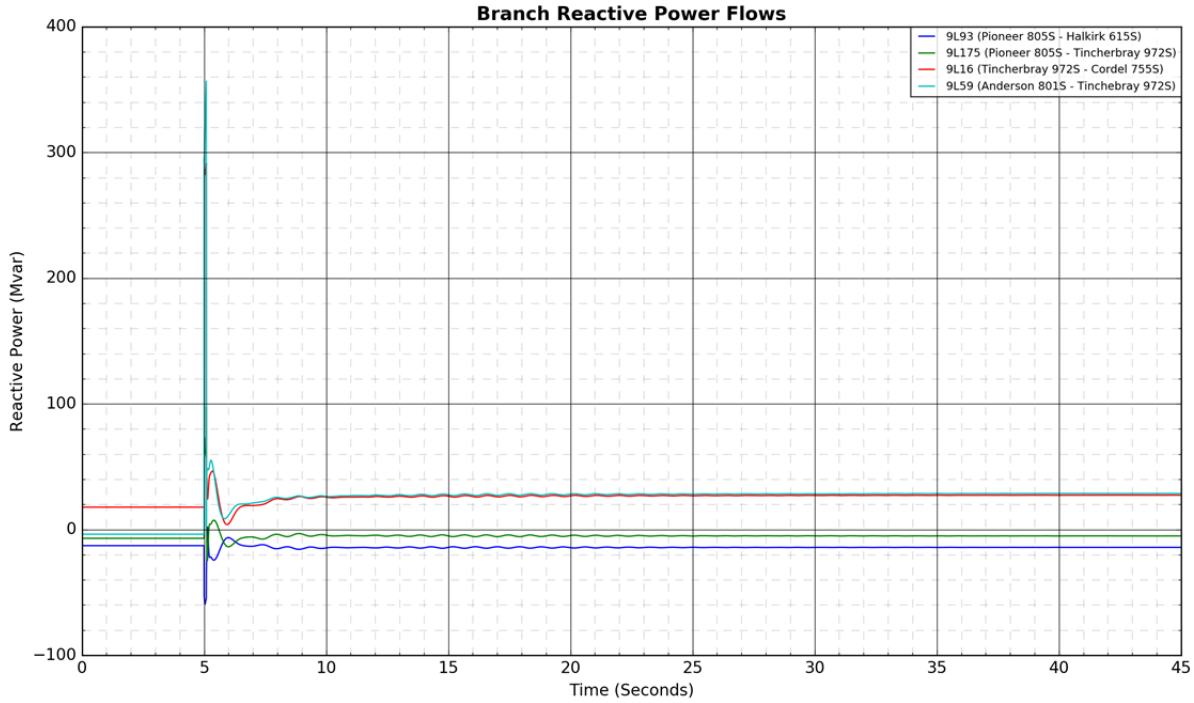
Branch Reactive Power Flows
9L93 (Pioneer 805S - Halkirk 615S)
9L175 (Pioneer 805S - Tincherbray 972S)
9L16 (Tincherbray 972S - Cordel 755S)
9L59 (Anderson 801S - Tinchebray 972S)
Reactive Power (Mvar)
Time (Seconds)

Figure A4-70: 912L\9L912 (Nevis 766S - Red Deer 63S): 3-phase fault at Red Deer 63S

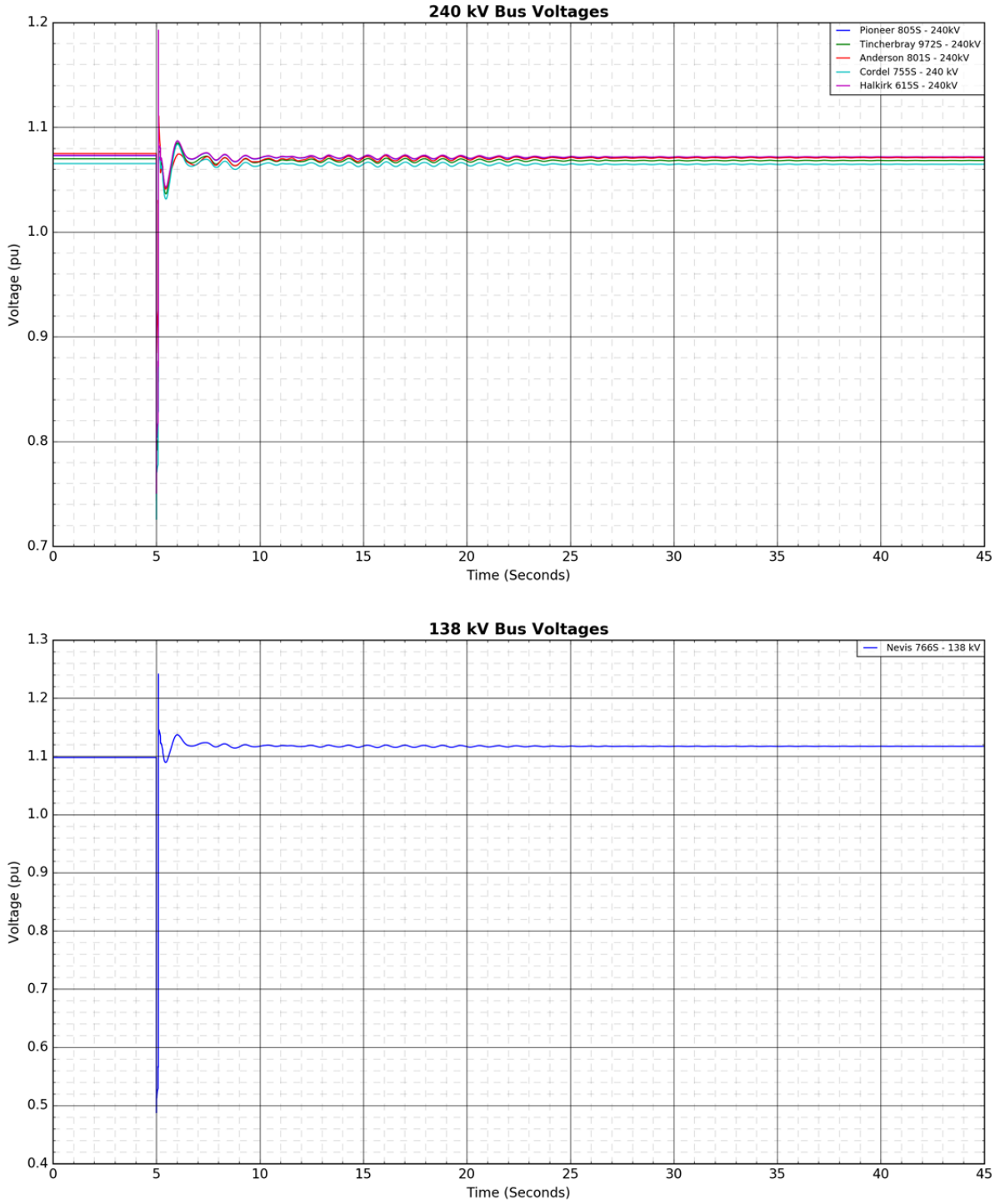

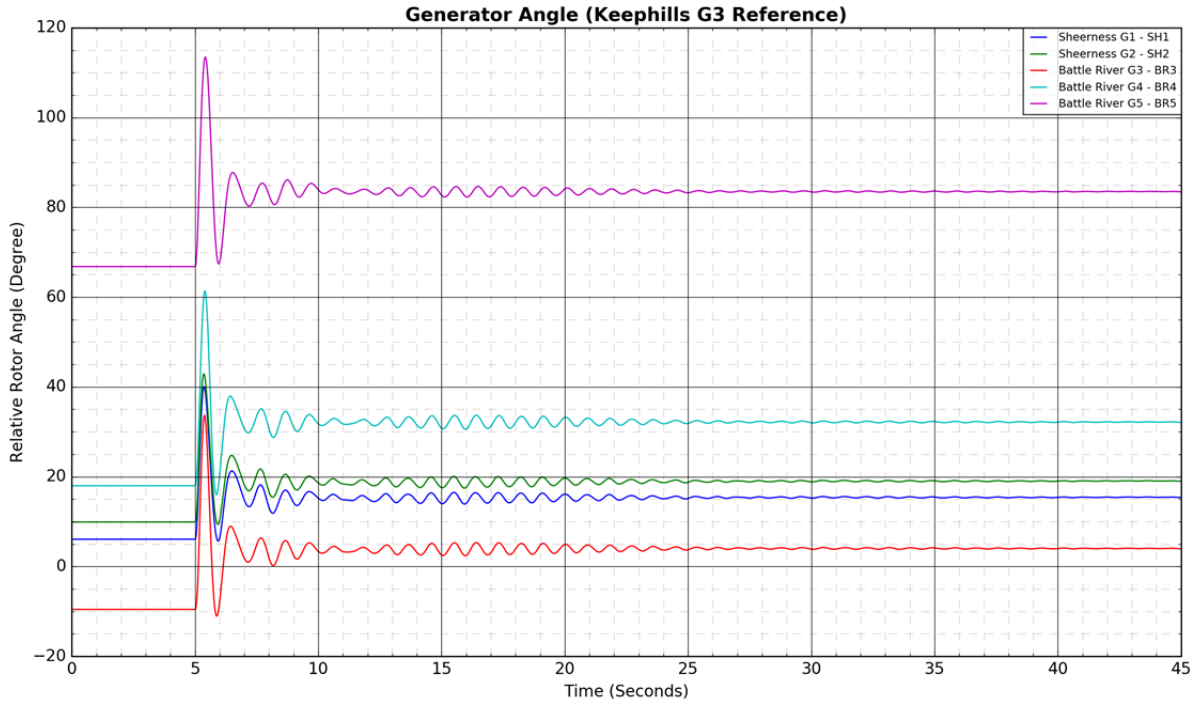
Generator Angle (Keephills G3 Reference)
Relative Rotor Angle (Degree)
Time (Seconds)
Sheerness G1 - SH1
Sheerness G2 - SH2
Battle River G3 - BR3
Battle River G4 - BR4
Battle River G5 - BR5

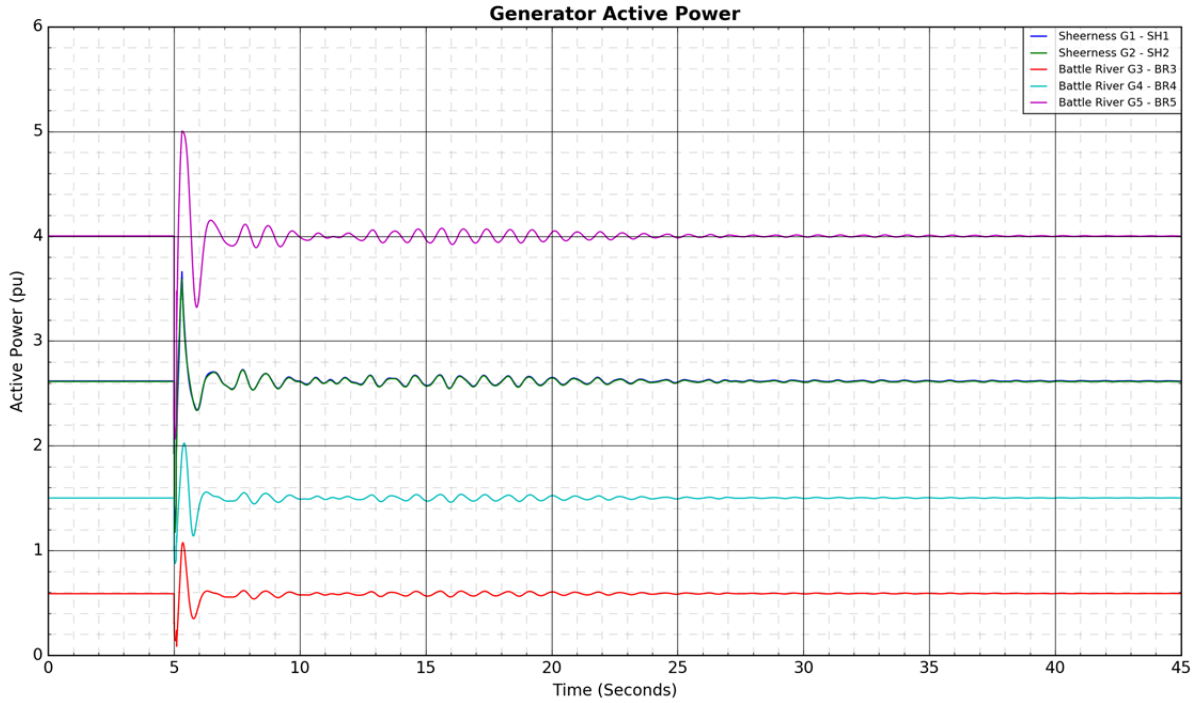
Generator Active Power
Active Power (pu)
Time (Seconds)
Sheerness G1 - SH1
Sheerness G2 - SH2
Battle River G3 - BR3
Battle River G4 - BR4
Battle River G5 - BR5

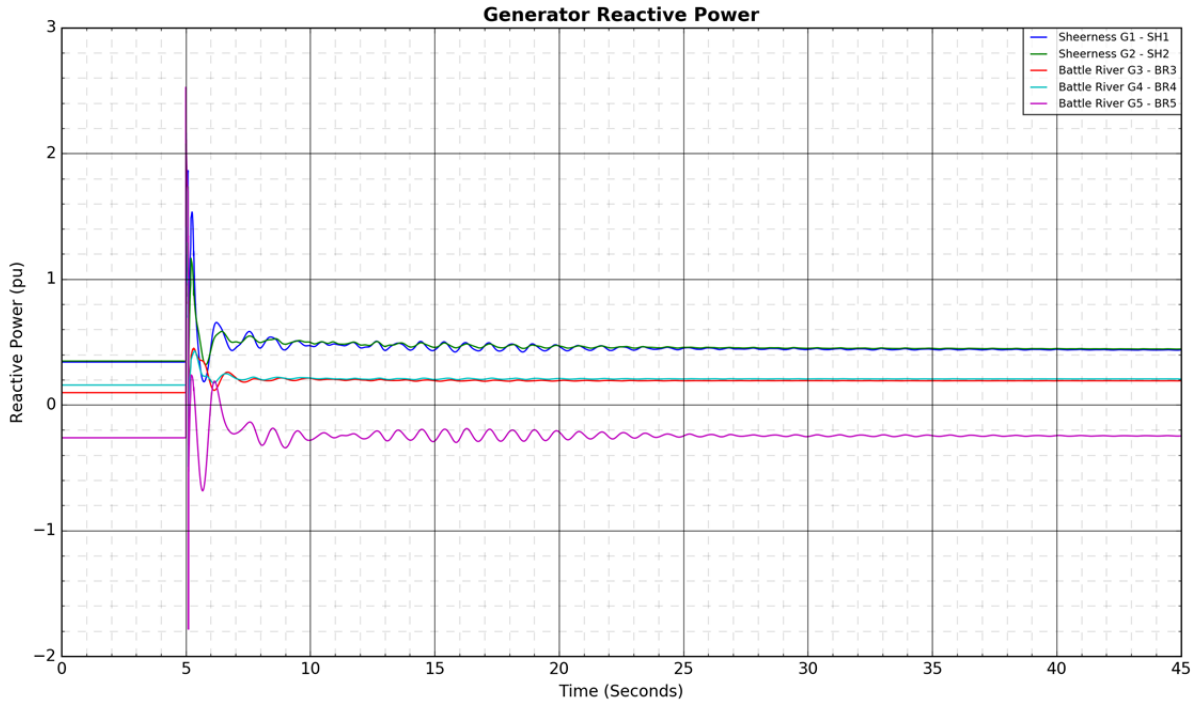
Generator Reactive Power
Sheerness G1 - SH1
Sheerness G2 - SH2
Battle River G3 - BR3
Battle River G4 - BR4
Battle River G5 - BR5
Reactive Power (pu)
Time (Seconds)

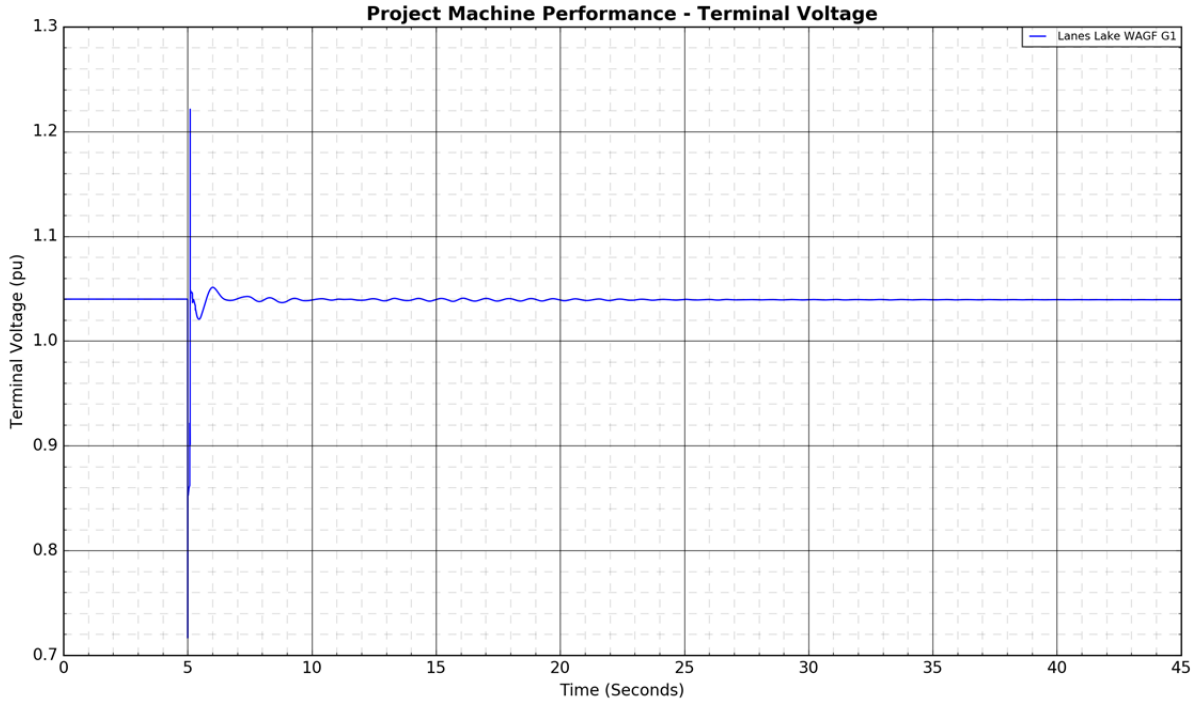
Project Machine Performance - Terminal Voltage
Lanes Lake WAGF G1
Terminal Voltage (pu)
Time (Seconds)


Project Machine Performance - Active Power
Lanes Lake WAGF G1
Active Power (pu)
Time (Seconds)
2.2
2.0
1.8
1.6
1.4
1.2
1.0
0
5
10
15
20
25
30
35
40
45

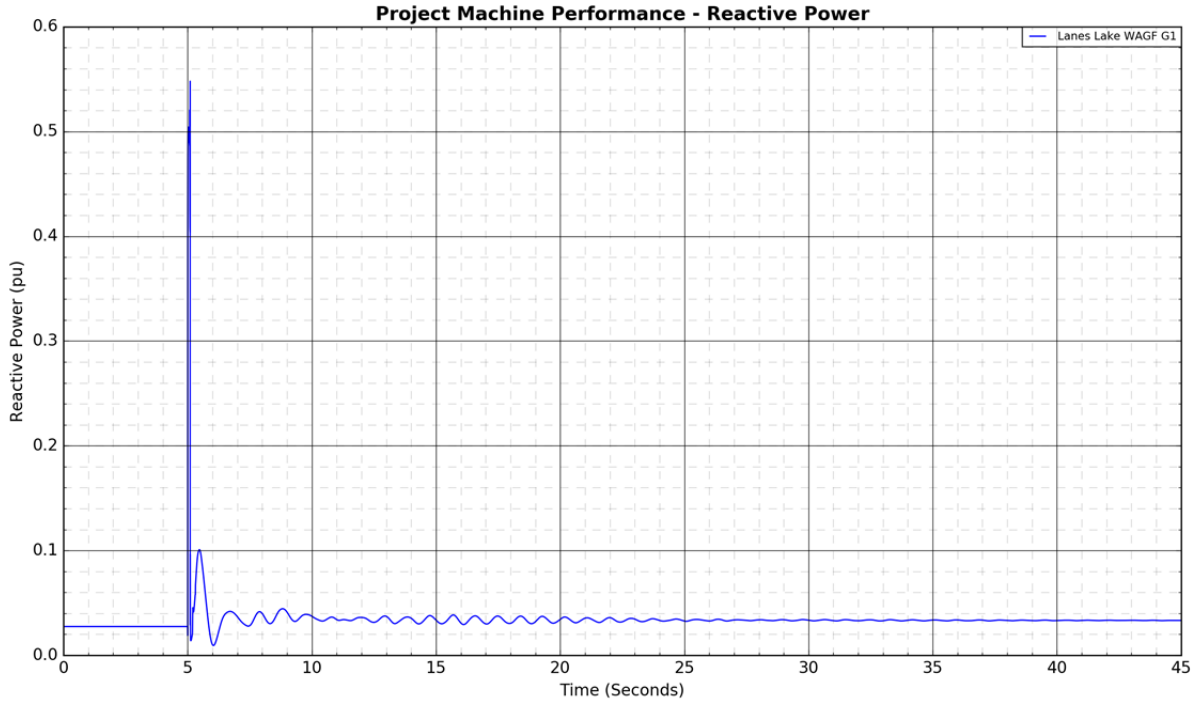
Project Machine Performance - Reactive Power
Lanes Lake WAGF G1
Reactive Power (pu)
Time (Seconds)
0.6
0.5
0.4
0.3
0.2
0.1
0.0
0
5
10
15
20
25
30
35
40
45

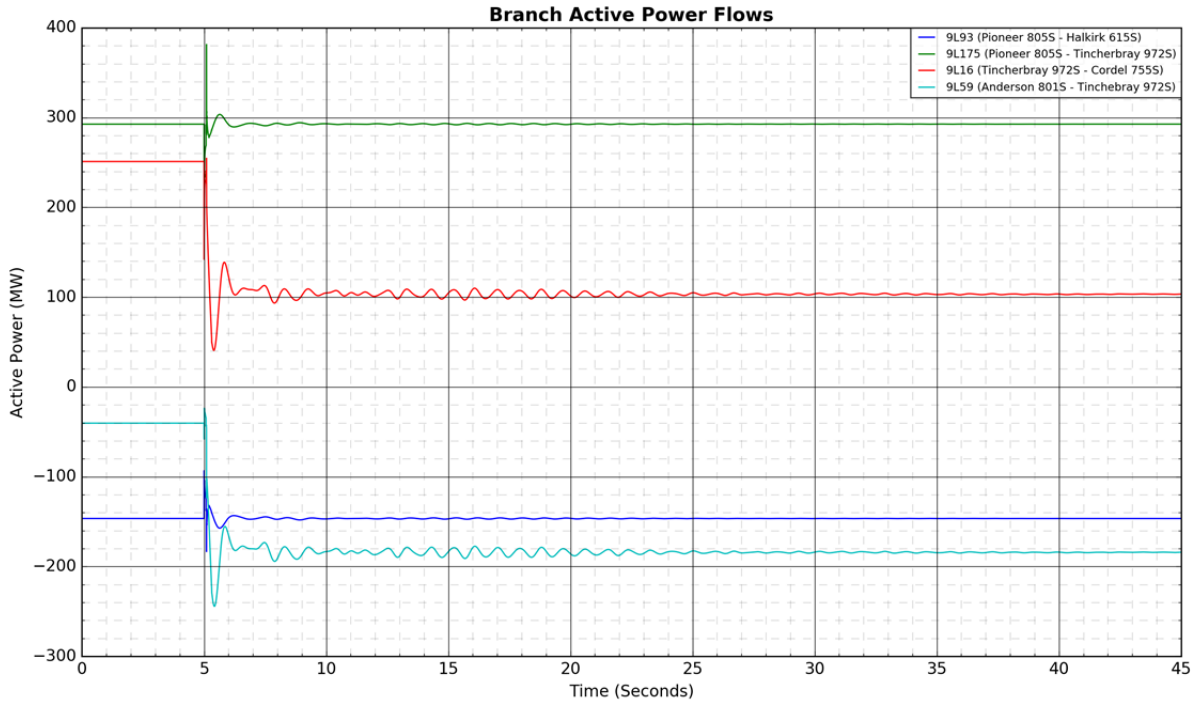
Branch Active Power Flows
9L93 (Pioneer 805S - Halkirk 615S)
9L175 (Pioneer 805S - Tincherbray 972S)
9L16 (Tincherbray 972S - Cordel 755S)
9L59 (Anderson 801S - Tinchebray 972S)
Active Power (MW)
Time (Seconds)

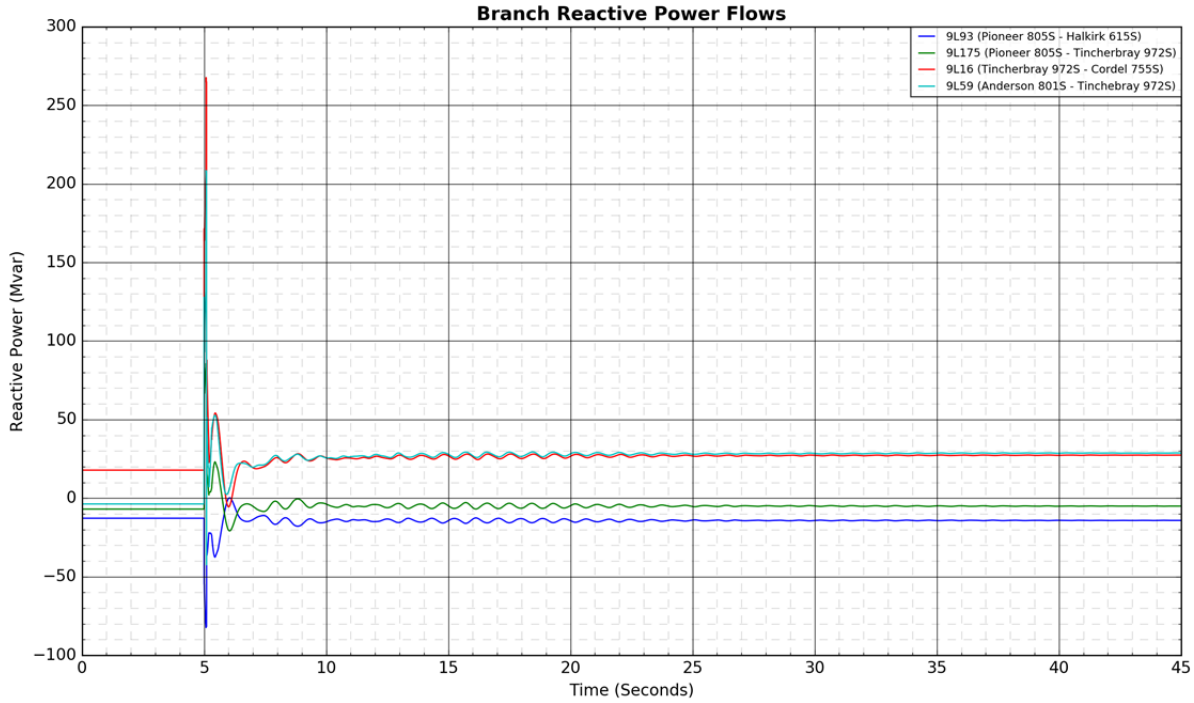
Branch Reactive Power Flows
9L93 (Pioneer 805S - Halkirk 615S)
9L175 (Pioneer 805S - Tincherbray 972S)
9L16 (Tincherbray 972S - Cordel 755S)
9L59 (Anderson 801S - Tinchebray 972S)
Reactive Power (Mvar)
Time (Seconds)

6. Stability Results 2019 Winter Peak - Case B

Figure A4-71: 9L24 (Oakland 946S - Lanfine 959S): 3-phase fault at Oakland 946S



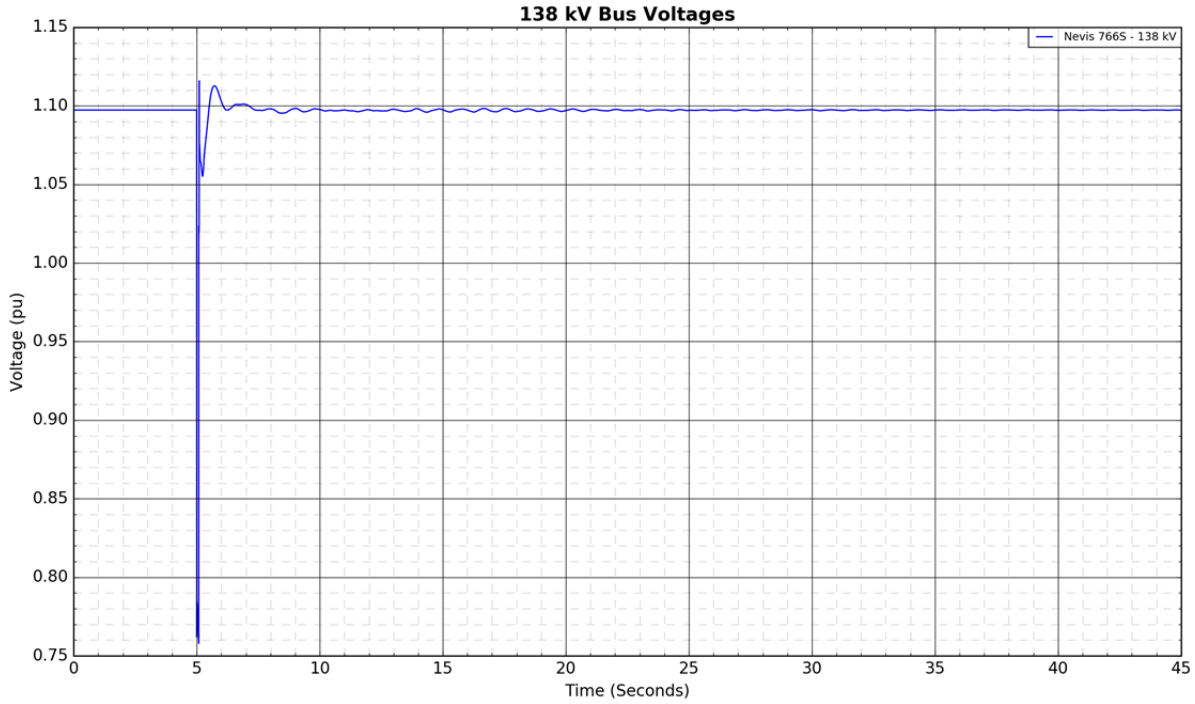

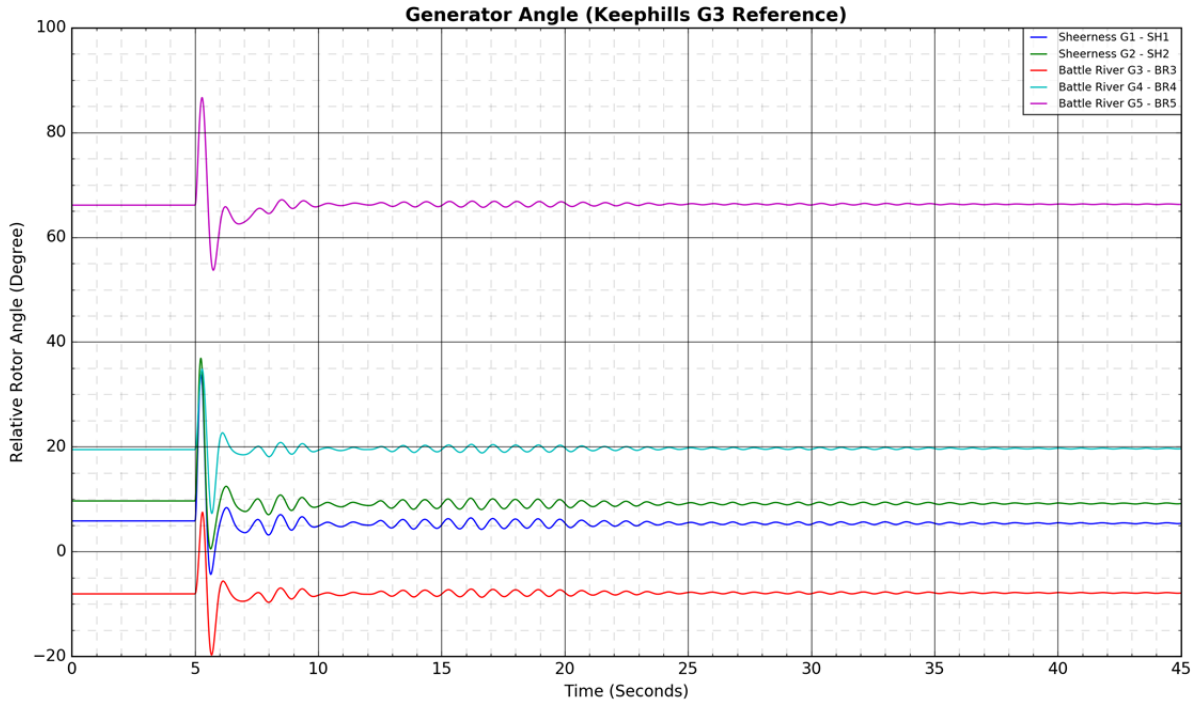
Generator Angle (Keephills G3 Reference)
Relative Rotor Angle (Degree)
Time (Seconds)
Sheerness G1 - SH1
Sheerness G2 - SH2
Battle River G3 - BR3
Battle River G4 - BR4
Battle River G5 - BR5

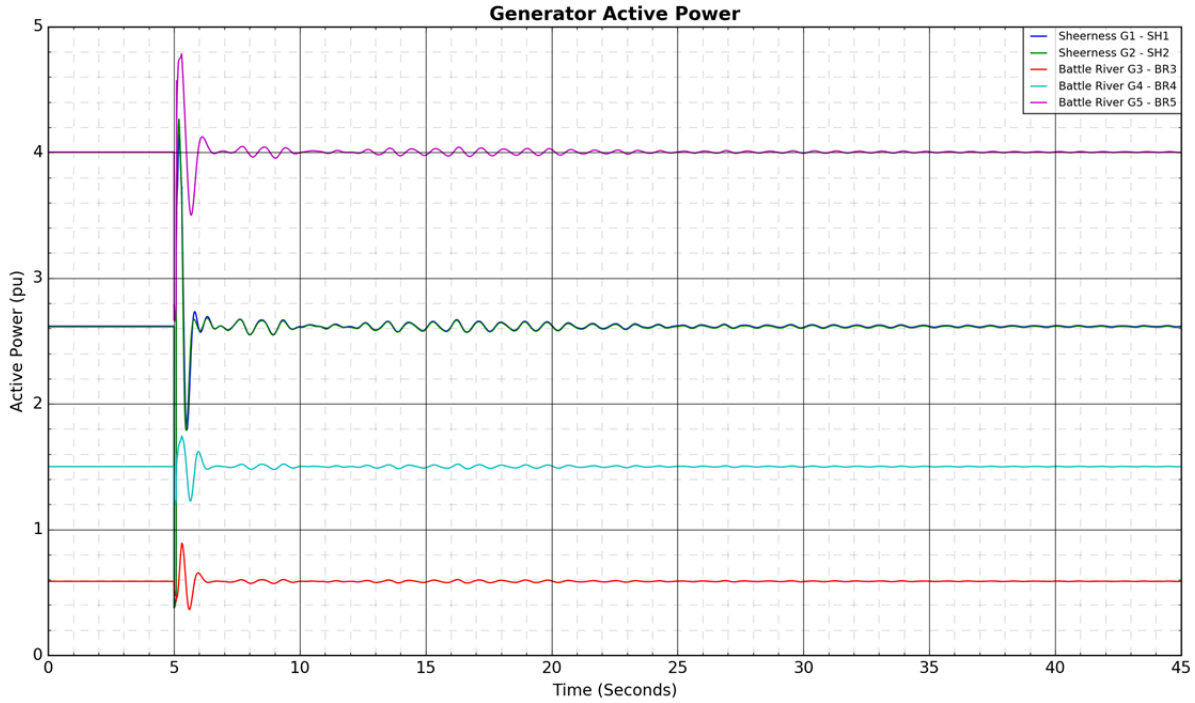
Generator Active Power
Active Power (pu)
Time (Seconds)
Sheerness G1 - SH1
Sheerness G2 - SH2
Battle River G3 - BR3
Battle River G4 - BR4
Battle River G5 - BR5

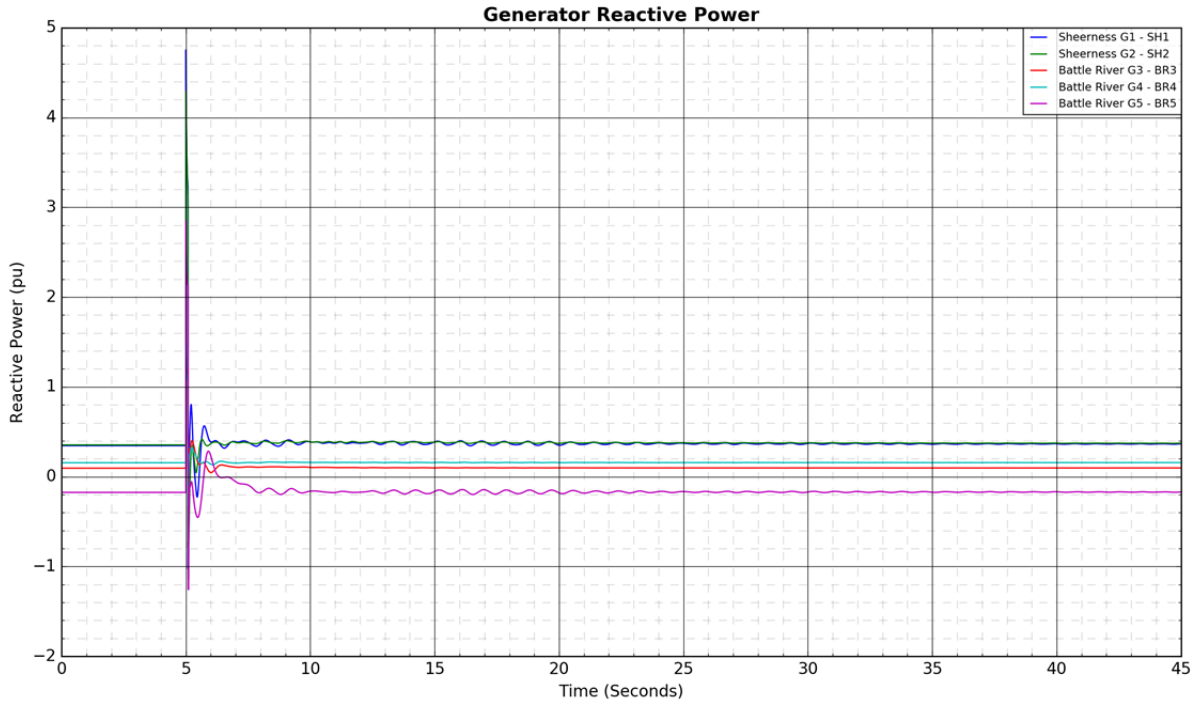
Generator Reactive Power
Sheerness G1 - SH1
Sheerness G2 - SH2
Battle River G3 - BR3
Battle River G4 - BR4
Battle River G5 - BR5
Reactive Power (pu)
Time (Seconds)

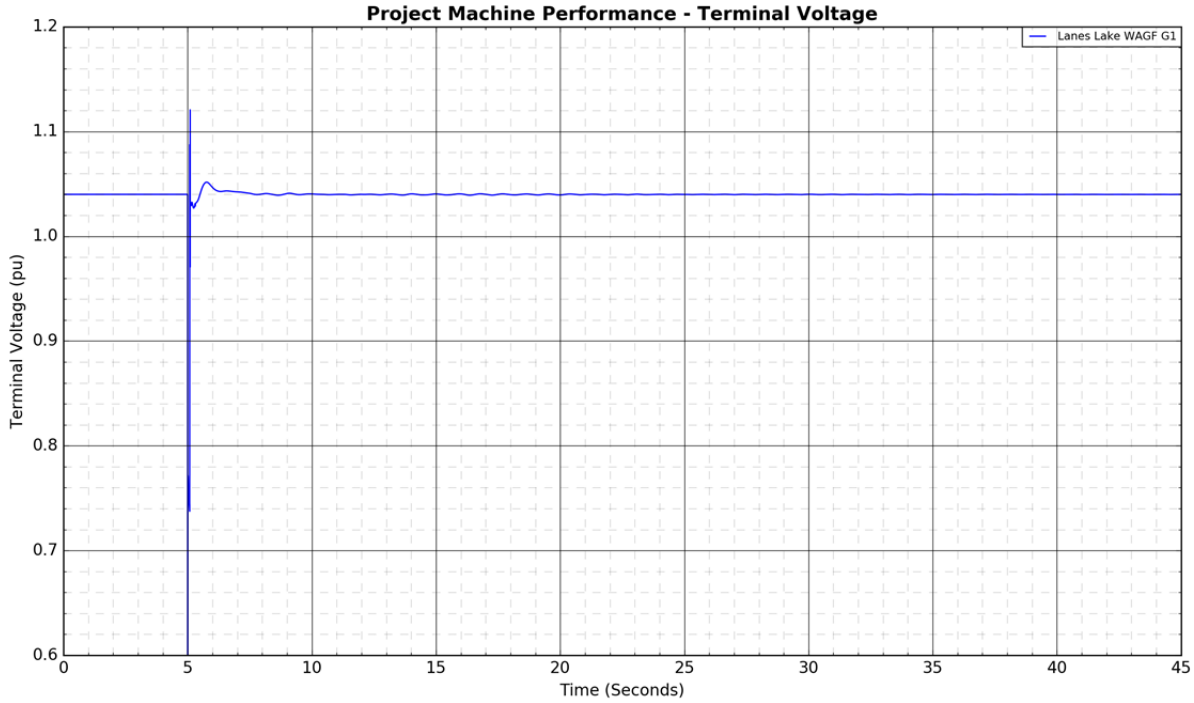
Project Machine Performance - Terminal Voltage
Lanes Lake WAGF G1
Terminal Voltage (pu)
Time (Seconds)


Project Machine Performance - Active Power
Lanes Lake WAGF G1
Active Power (pu)
Time (Seconds)
2.2
2.0
1.8
1.6
1.4
1.2
1.0
0.8
0
5
10
15
20
25
30
35
40
45

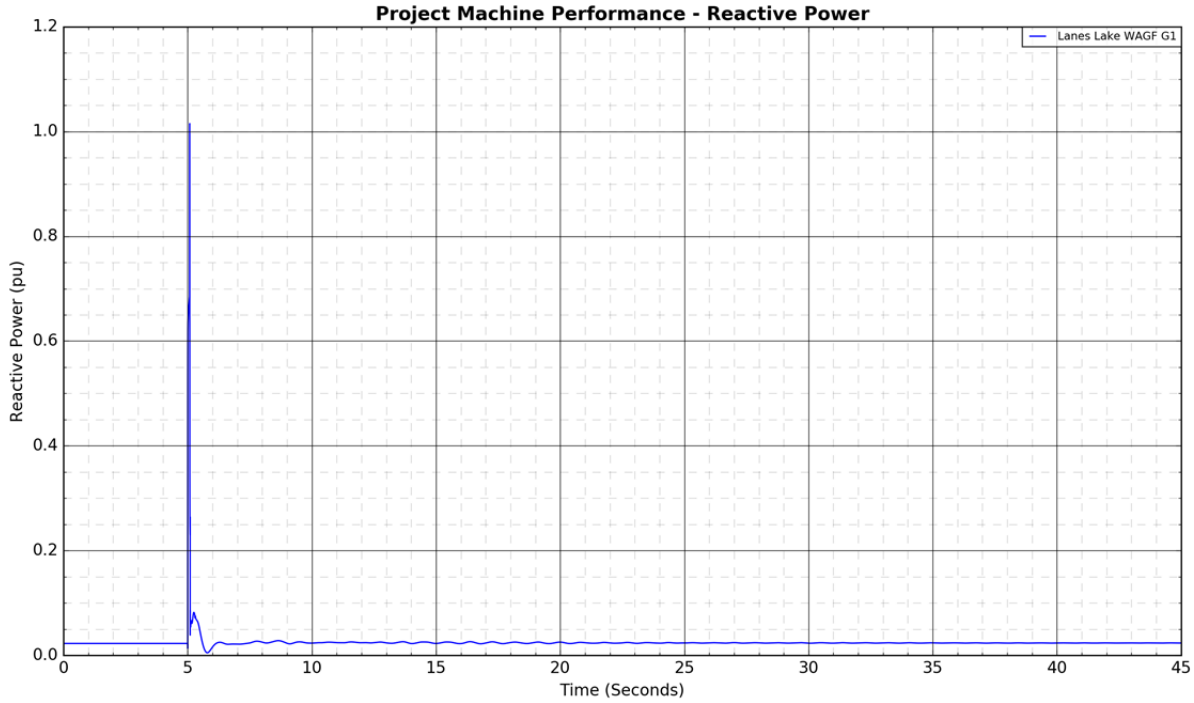
Project Machine Performance - Reactive Power
Lanes Lake WAGF G1
Reactive Power (pu)
Time (Seconds)
1.2
1.0
0.8
0.6
0.4
0.2
0.0
0
5
10
15
20
25
30
35
40
45

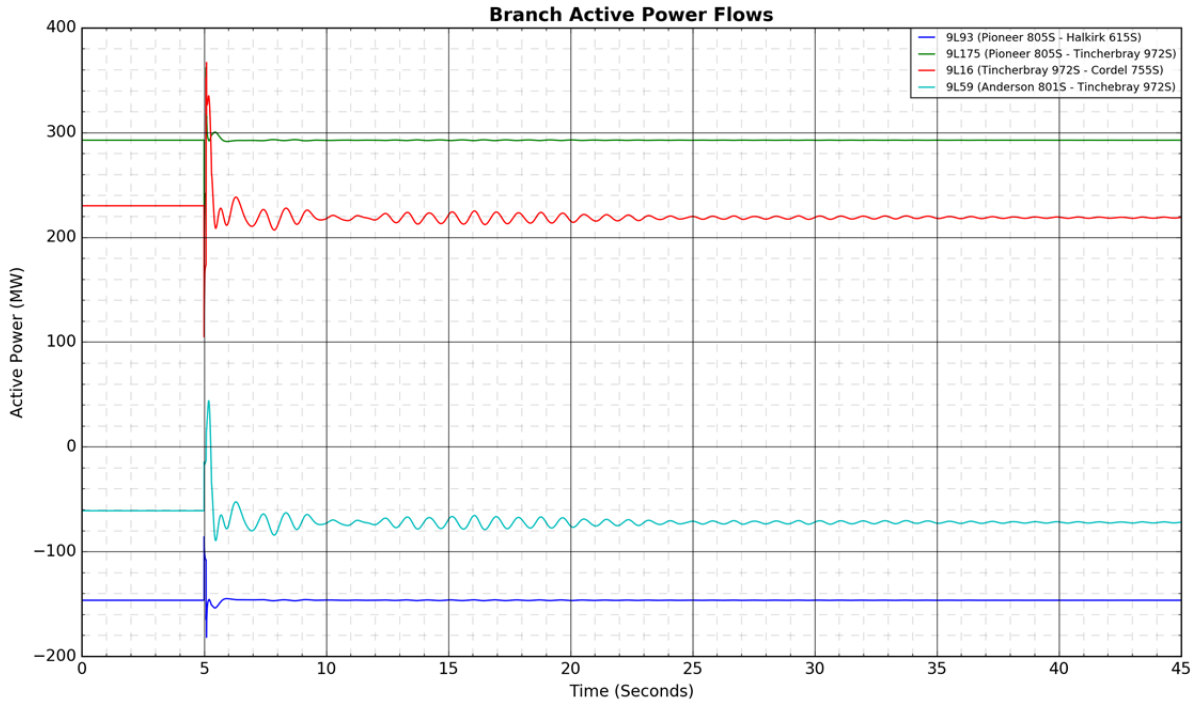
Branch Active Power Flows
9L93 (Pioneer 805S - Halkirk 615S)
9L175 (Pioneer 805S - Tincherbray 972S)
9L16 (Tincherbray 972S - Cordel 755S)
9L59 (Anderson 801S - Tinchebray 972S)
Active Power (MW)
Time (Seconds)

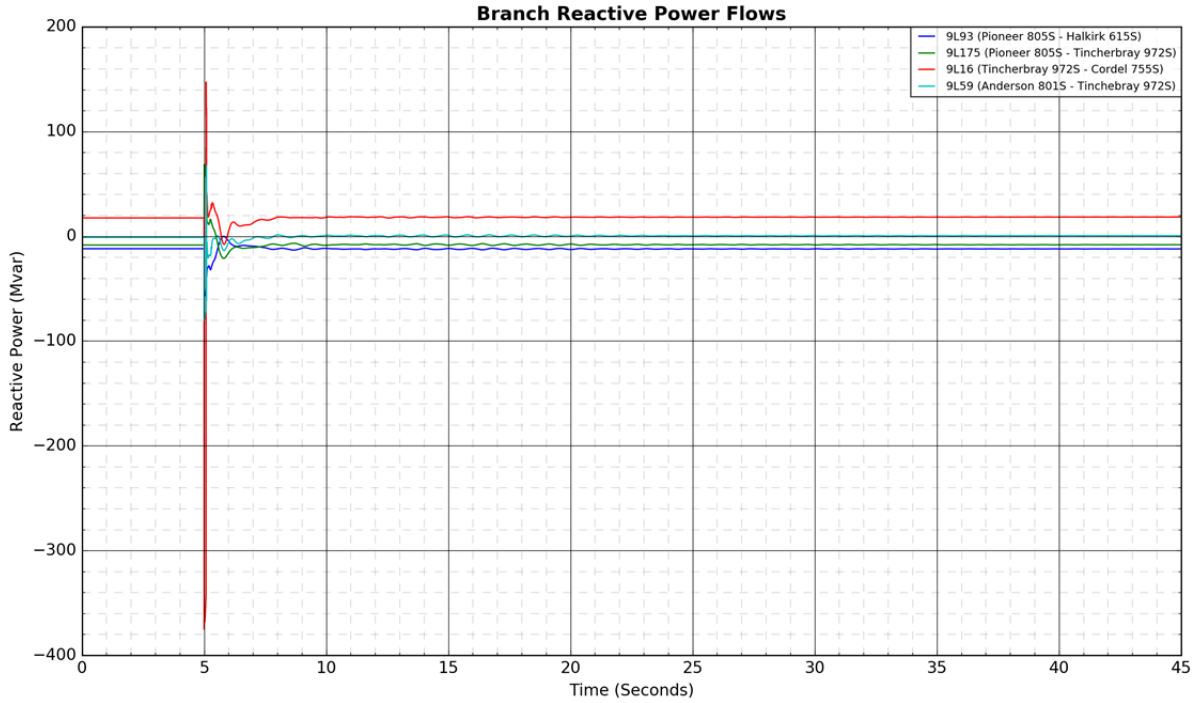
Branch Reactive Power Flows
9L93 (Pioneer 805S - Halkirk 615S)
9L175 (Pioneer 805S - Tincherbray 972S)
9L16 (Tincherbray 972S - Cordel 755S)
9L59 (Anderson 801S - Tinchebray 972S)
Reactive Power (Mvar)
Time (Seconds)

Figure A4-72: 9L24 (Oakland 946S - Lanfine 959S): 3-phase fault at Lanfine 959S

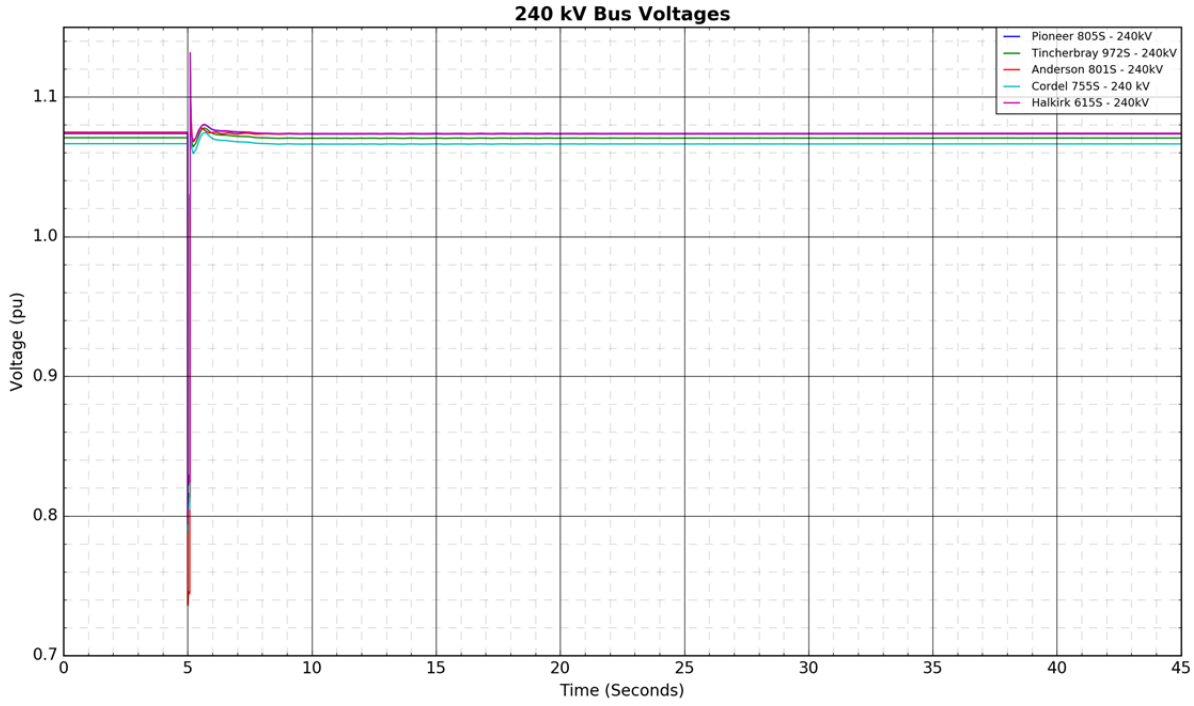

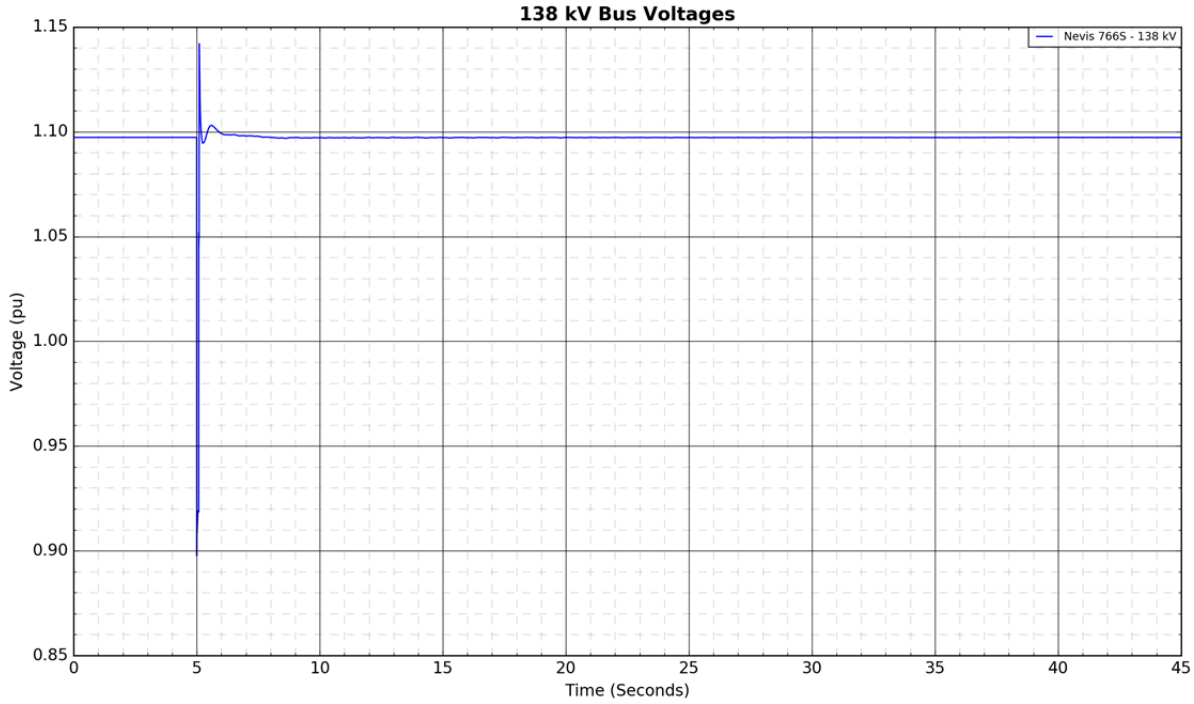

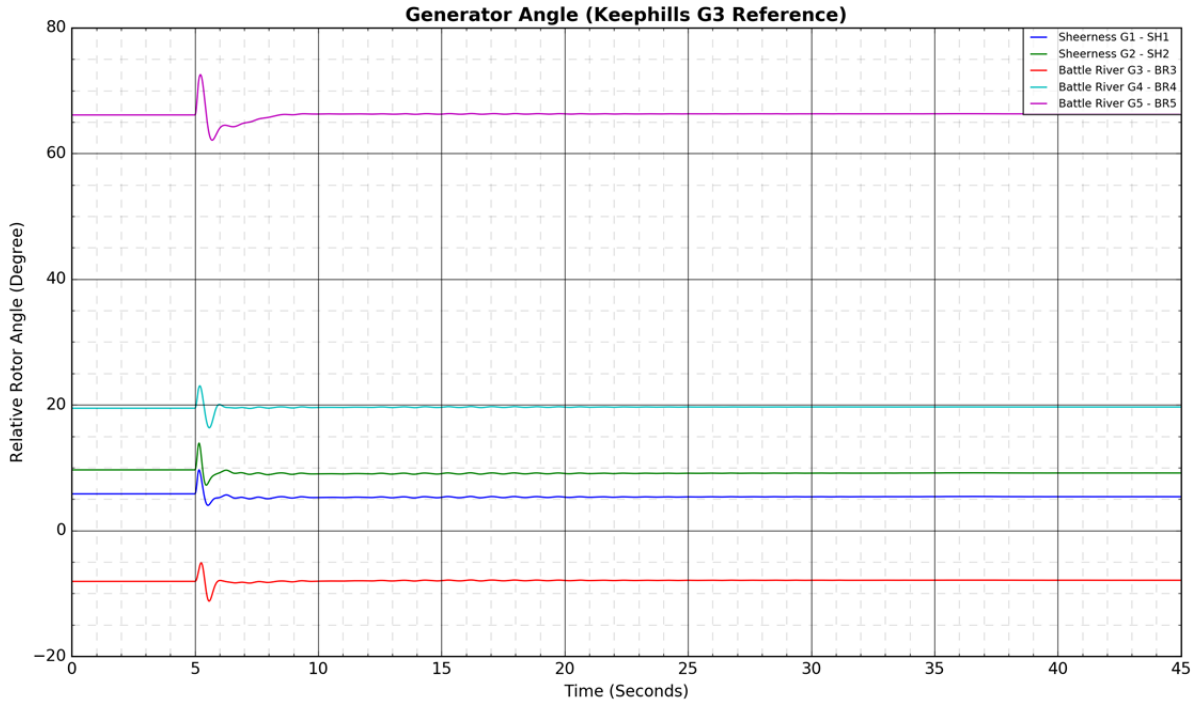
Generator Angle (Keephills G3 Reference)
Relative Rotor Angle (Degree)
Time (Seconds)
Sheerness G1 - SH1
Sheerness G2 - SH2
Battle River G3 - BR3
Battle River G4 - BR4
Battle River G5 - BR5

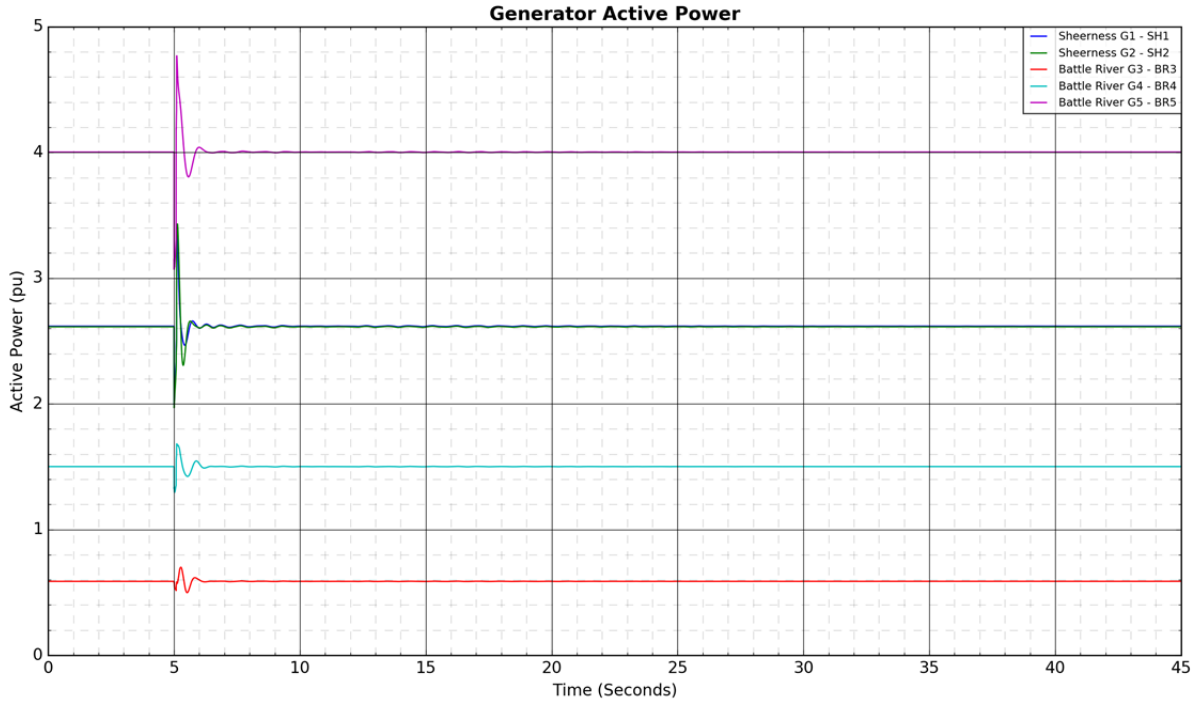
Generator Active Power
Active Power (pu)
Time (Seconds)
Sheerness G1 - SH1
Sheerness G2 - SH2
Battle River G3 - BR3
Battle River G4 - BR4
Battle River G5 - BR5

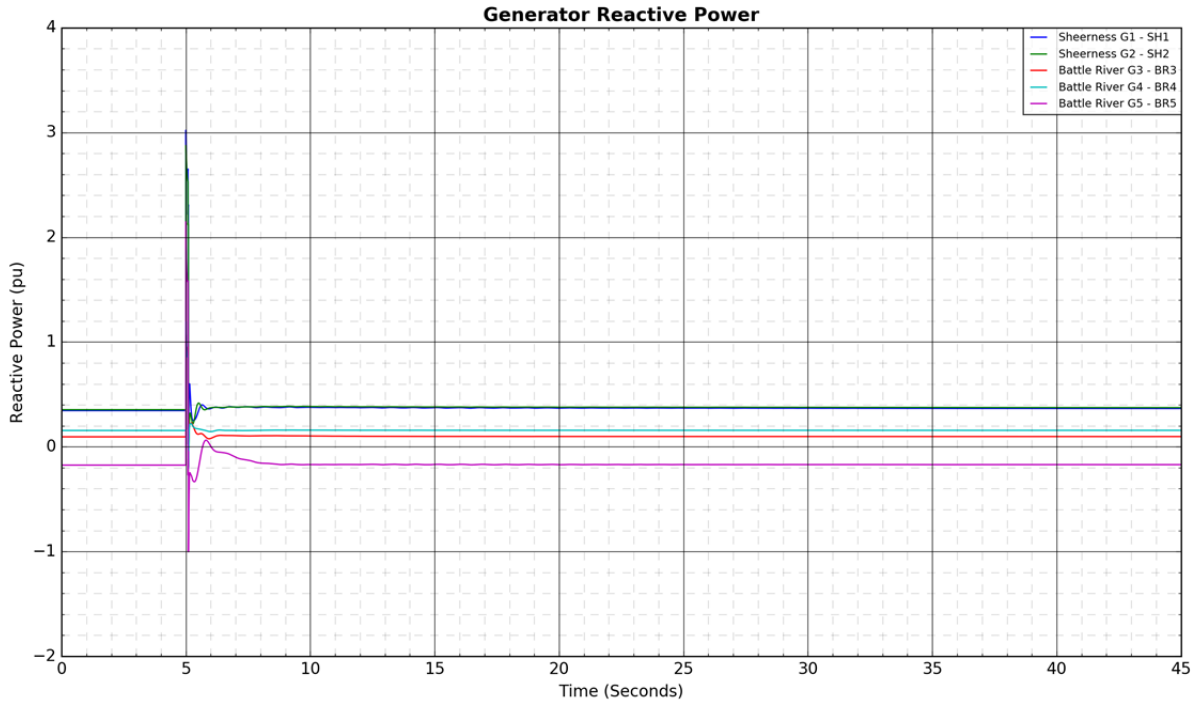
Generator Reactive Power
Sheerness G1 - SH1
Sheerness G2 - SH2
Battle River G3 - BR3
Battle River G4 - BR4
Battle River G5 - BR5
Reactive Power (pu)
Time (Seconds)

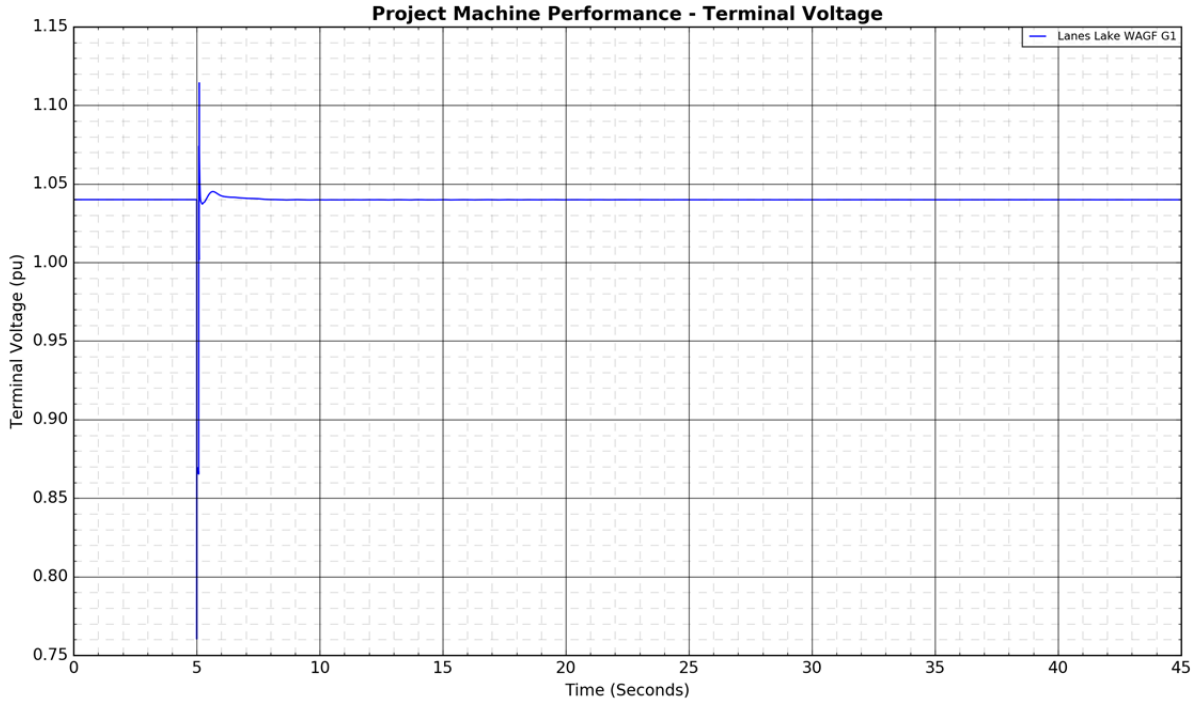
Project Machine Performance - Terminal Voltage
Lanes Lake WAGF G1
Terminal Voltage (pu)
Time (Seconds)


Project Machine Performance - Active Power
Lanes Lake WAGF G1
Active Power (pu)
Time (Seconds)
1.9
1.8
1.7
1.6
1.5
1.4
1.3
1.2
1.1
1.0
0
5
10
15
20
25
30
35
40
45

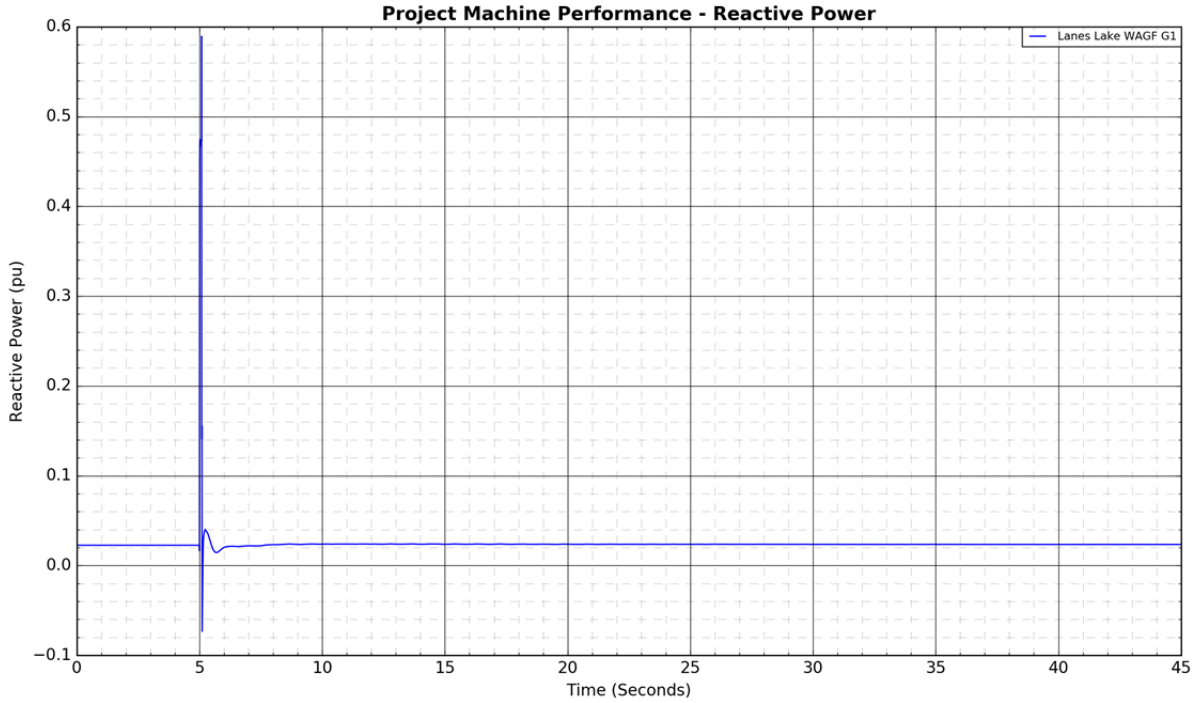
Project Machine Performance - Reactive Power
Lanes Lake WAGF G1
Reactive Power (pu)
Time (Seconds)
0.6
0.5
0.4
0.3
0.2
0.1
0.0
−0.1
0
5
10
15
20
25
30
35
40
45


Branch Active Power Flows
9L93 (Pioneer 805S - Halkirk 615S)
9L175 (Pioneer 805S - Tincherbray 972S)
9L16 (Tincherbray 972S - Cordel 755S)
9L59 (Anderson 801S - Tinchebray 972S)
Active Power (MW)
Time (Seconds)

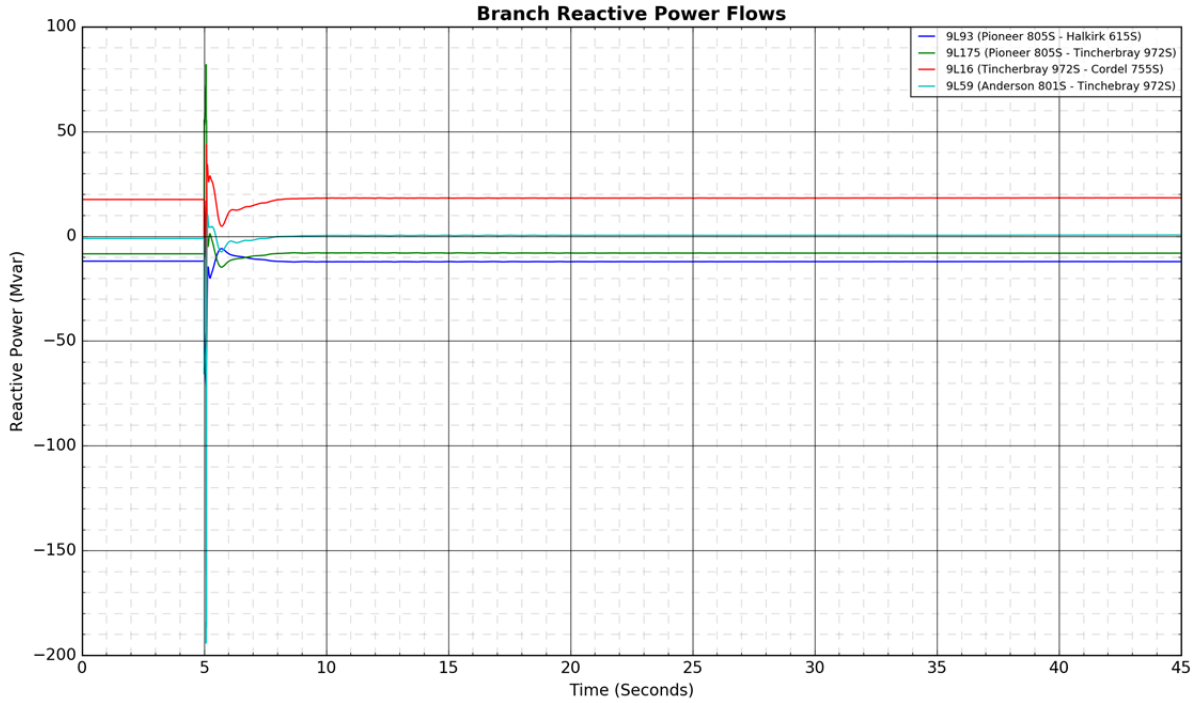
Branch Reactive Power Flows
9L93 (Pioneer 805S - Halkirk 615S)
9L175 (Pioneer 805S - Tincherbray 972S)
9L16 (Tincherbray 972S - Cordel 755S)
9L59 (Anderson 801S - Tinchebray 972S)
Reactive Power (Mvar)
Time (Seconds)

Figure A4-73: 9L29 (Oakland 946S - Coyote Lake 963S): 3-phase fault at Oakland 946S



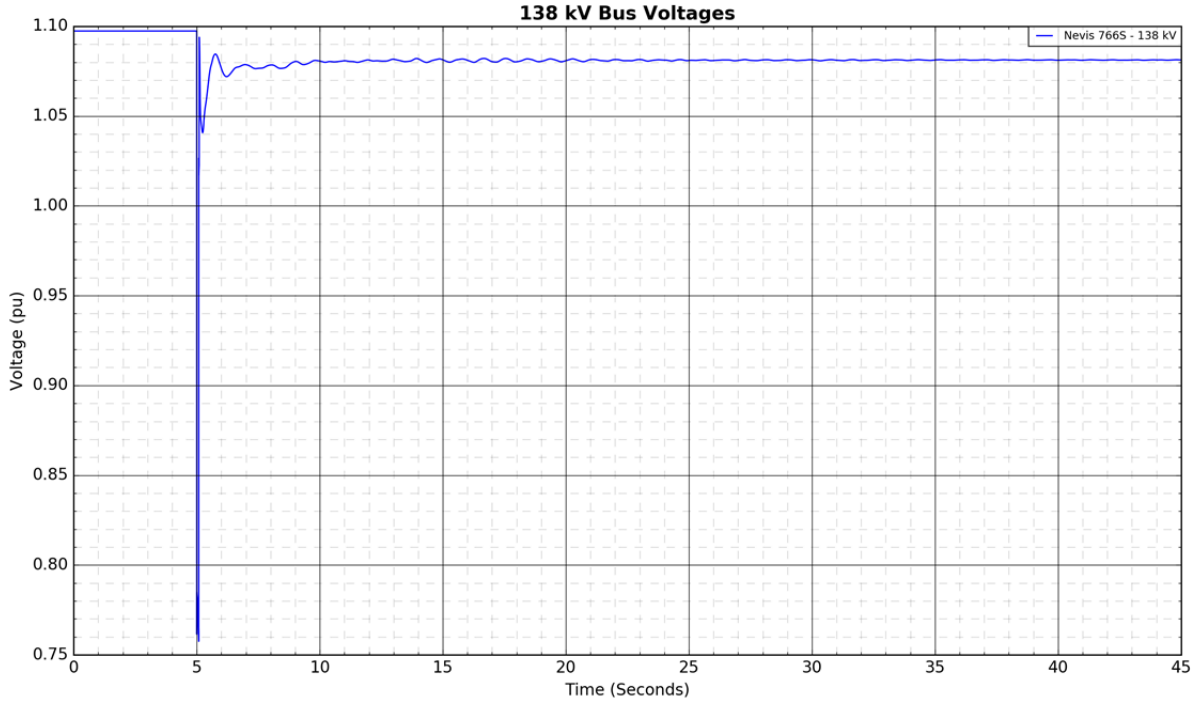

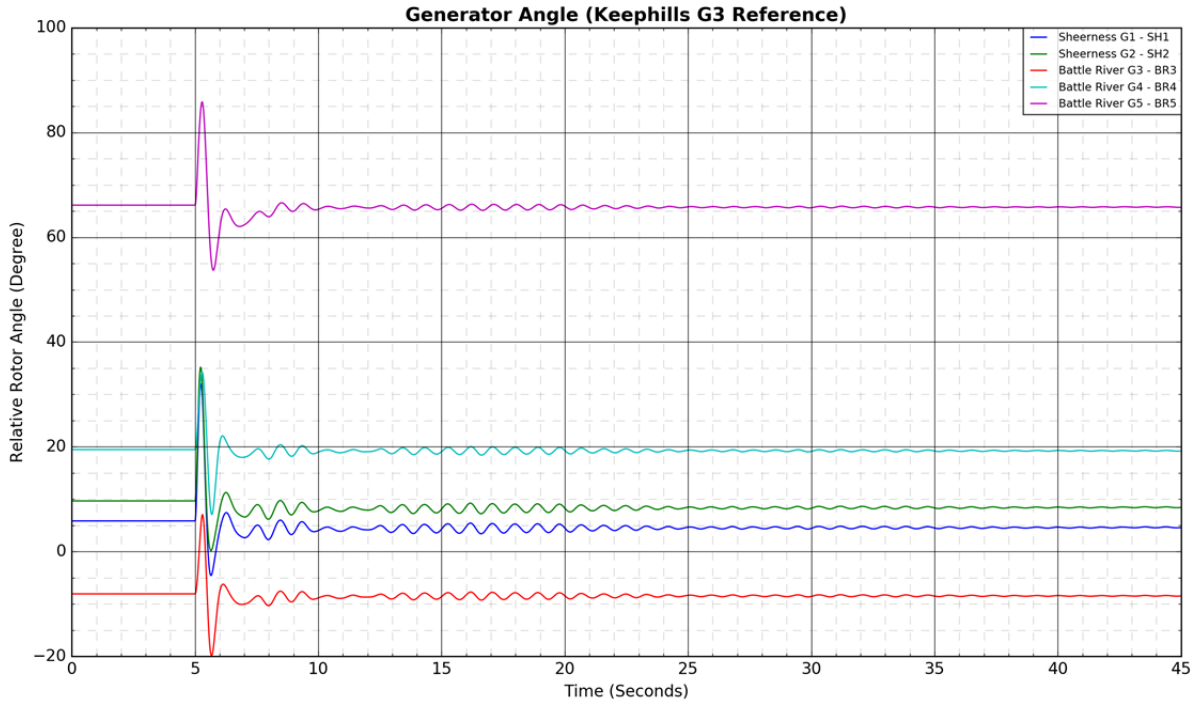
Generator Angle (Keephills G3 Reference)
Relative Rotor Angle (Degree)
Time (Seconds)
Sheerness G1 - SH1
Sheerness G2 - SH2
Battle River G3 - BR3
Battle River G4 - BR4
Battle River G5 - BR5

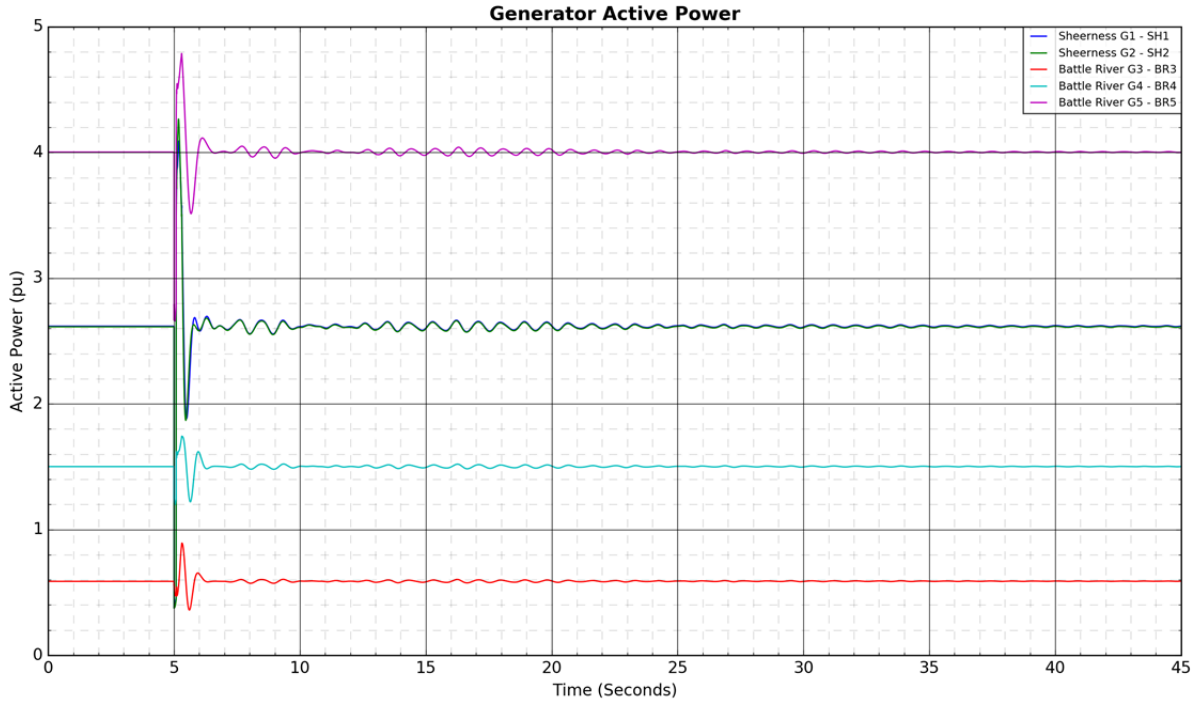
Generator Active Power
Active Power (pu)
Time (Seconds)
Sheerness G1 - SH1
Sheerness G2 - SH2
Battle River G3 - BR3
Battle River G4 - BR4
Battle River G5 - BR5

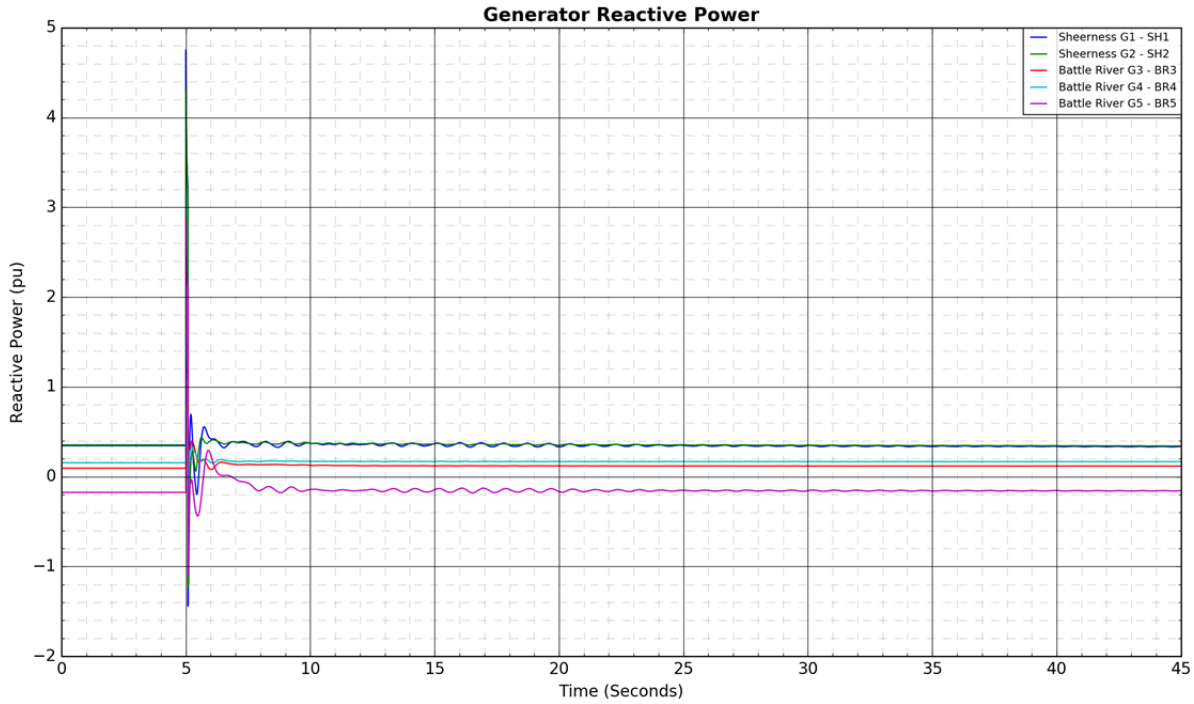
Generator Reactive Power
Sheerness G1 - SH1
Sheerness G2 - SH2
Battle River G3 - BR3
Battle River G4 - BR4
Battle River G5 - BR5
Reactive Power (pu)
Time (Seconds)

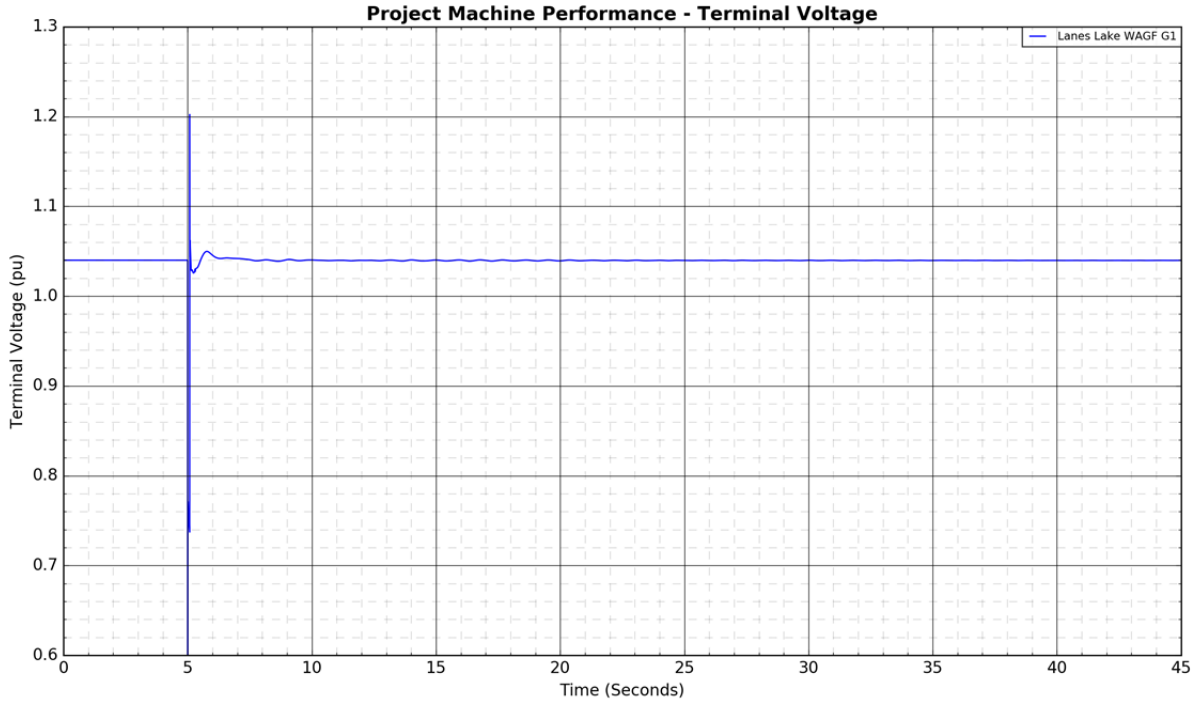
Project Machine Performance - Terminal Voltage
Lanes Lake WAGF G1
Terminal Voltage (pu)
Time (Seconds)


Project Machine Performance - Active Power
Lanes Lake WAGF G1
Active Power (pu)
Time (Seconds)
2.4
2.2
2.0
1.8
1.6
1.4
1.2
1.0
0.8
0
5
10
15
20
25
30
35
40
45

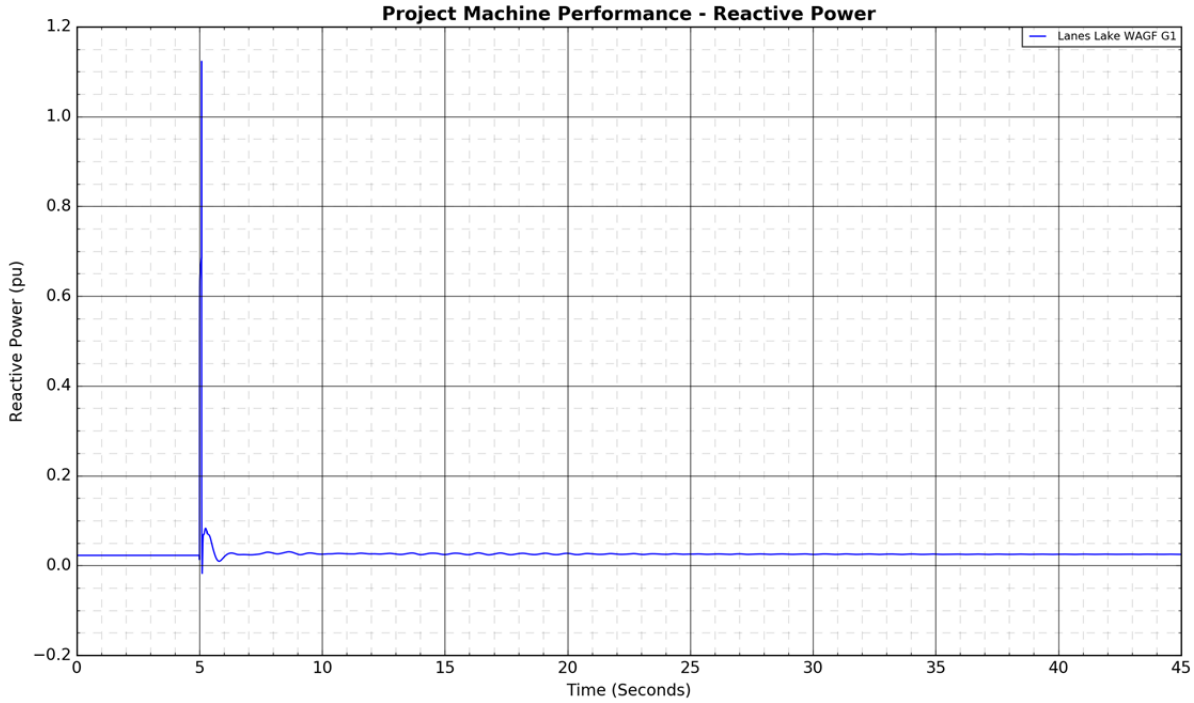
Project Machine Performance - Reactive Power
Lanes Lake WAGF G1
Reactive Power (pu)
Time (Seconds)
1.2
1.0
0.8
0.6
0.4
0.2
0.0
−0.2
0
5
10
15
20
25
30
35
40
45

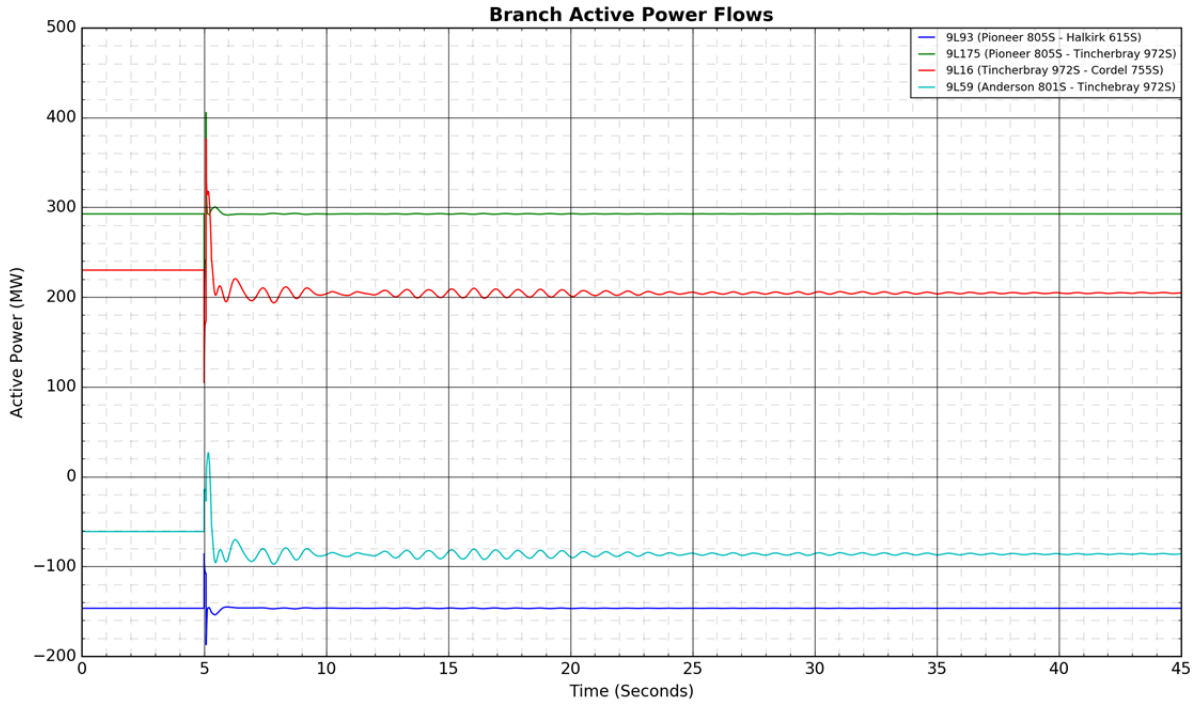
Branch Active Power Flows
9L93 (Pioneer 805S - Halkirk 615S)
9L175 (Pioneer 805S - Tincherbray 972S)
9L16 (Tincherbray 972S - Cordel 755S)
9L59 (Anderson 801S - Tinchebray 972S)
Active Power (MW)
Time (Seconds)

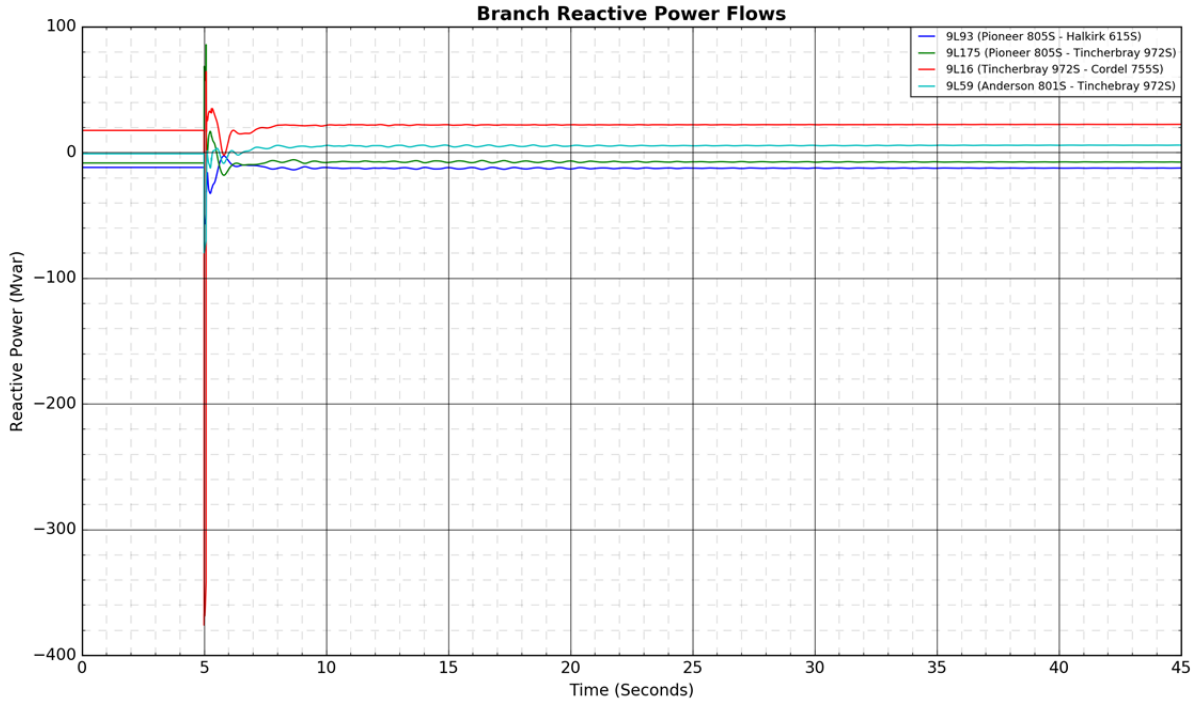
Branch Reactive Power Flows
9L93 (Pioneer 805S - Halkirk 615S)
9L175 (Pioneer 805S - Tincherbray 972S)
9L16 (Tincherbray 972S - Cordel 755S)
9L59 (Anderson 801S - Tinchebray 972S)
Reactive Power (Mvar)
Time (Seconds)

Figure A4-74: 9L29 (Oakland 946S - Coyote Lake 963S): 3-phase fault at Coyote Lake 963S



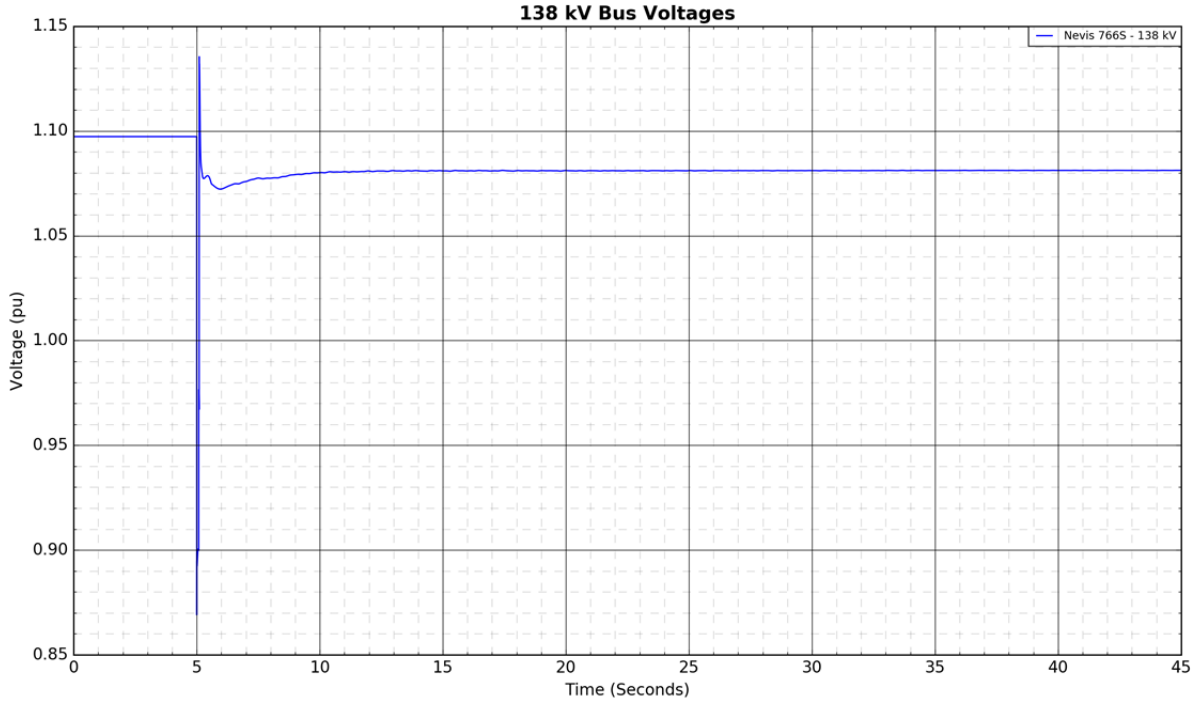

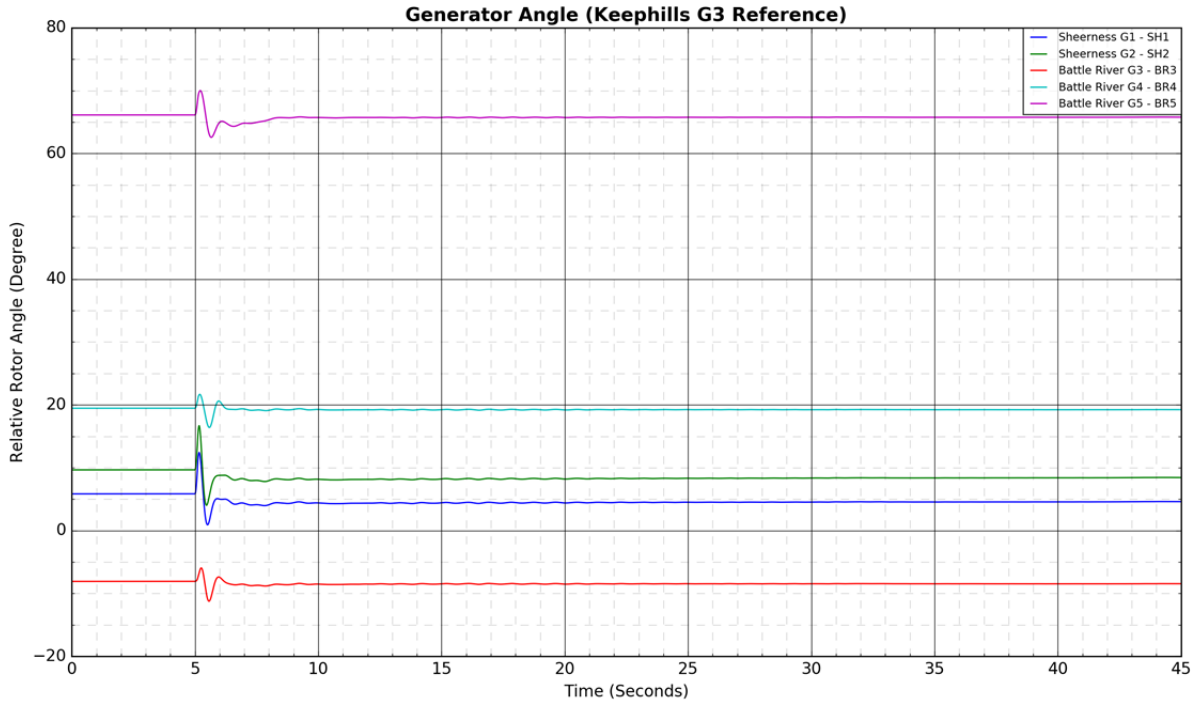
Generator Angle (Keephills G3 Reference)
Relative Rotor Angle (Degree)
Time (Seconds)
Sheerness G1 - SH1
Sheerness G2 - SH2
Battle River G3 - BR3
Battle River G4 - BR4
Battle River G5 - BR5

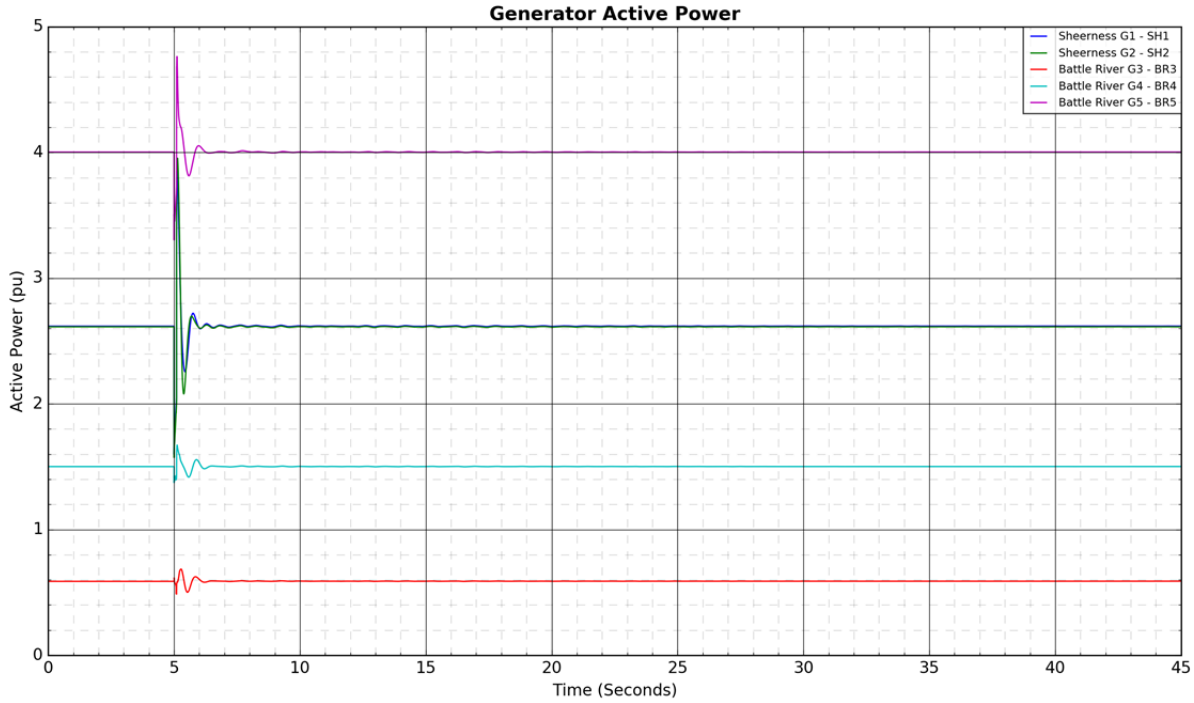
Generator Active Power
Active Power (pu)
Time (Seconds)
Sheerness G1 - SH1
Sheerness G2 - SH2
Battle River G3 - BR3
Battle River G4 - BR4
Battle River G5 - BR5

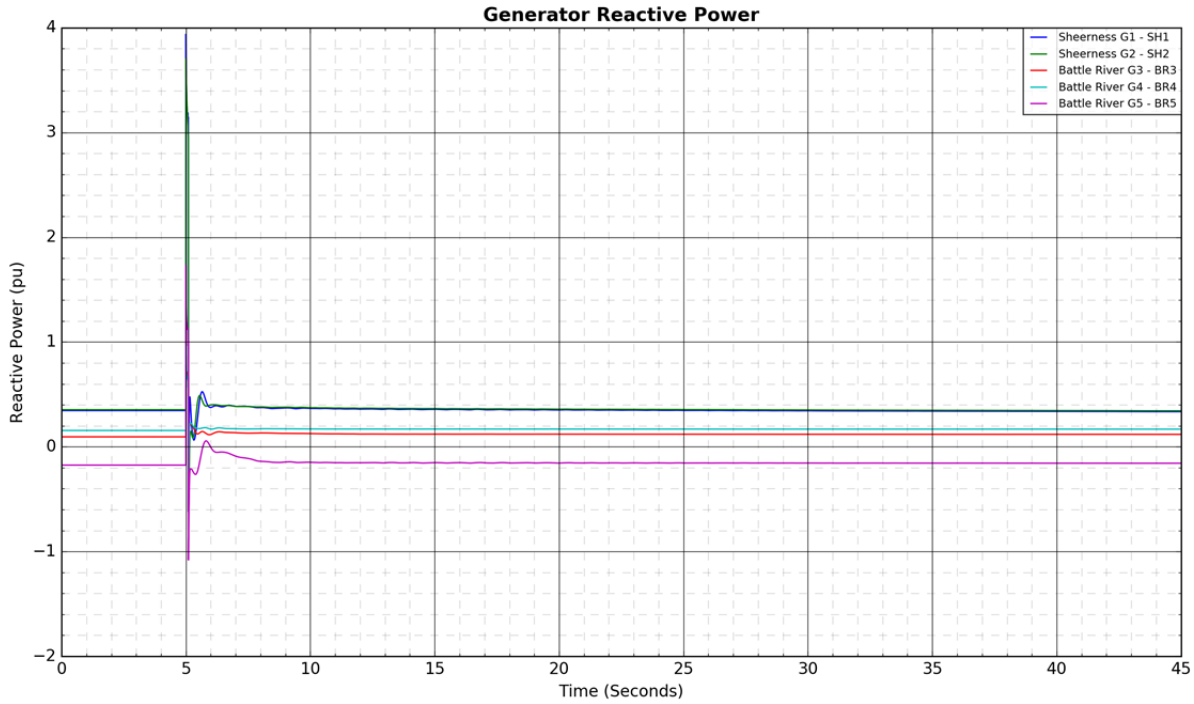
Generator Reactive Power
Sheerness G1 - SH1
Sheerness G2 - SH2
Battle River G3 - BR3
Battle River G4 - BR4
Battle River G5 - BR5
Reactive Power (pu)
Time (Seconds)

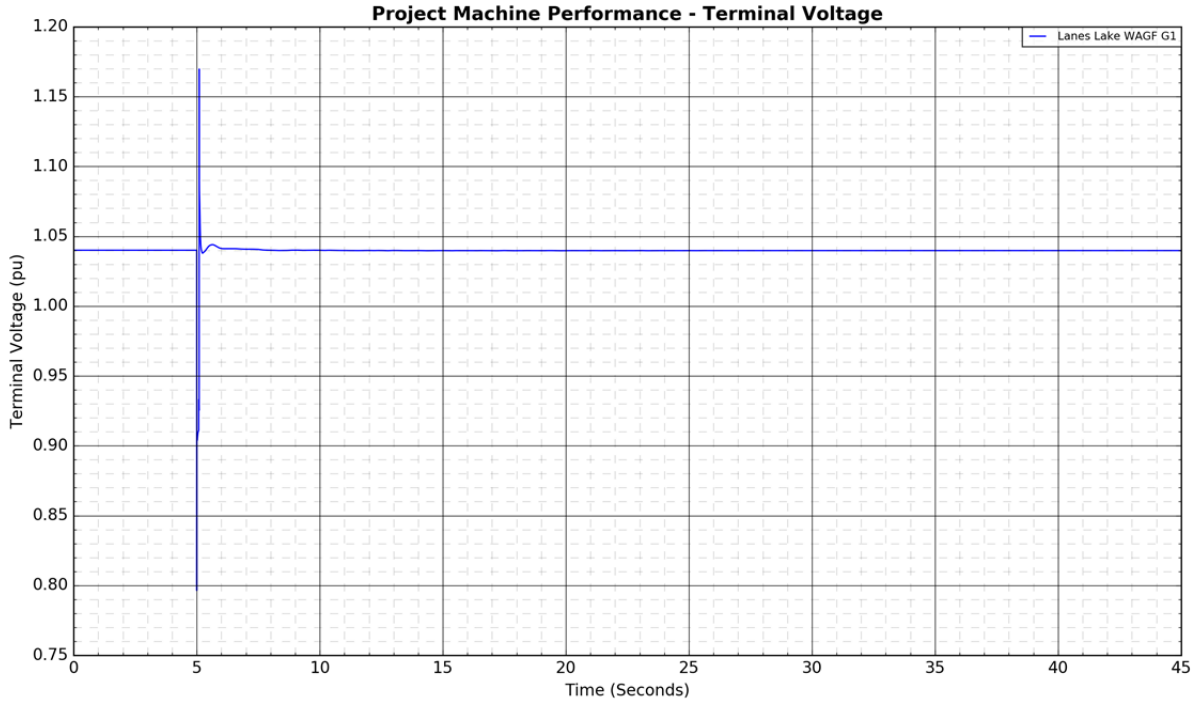
Project Machine Performance - Terminal Voltage
Lanes Lake WAGF G1
Terminal Voltage (pu)
Time (Seconds)


Project Machine Performance - Active Power
Lanes Lake WAGF G1
Active Power (pu)
1.9
1.8
1.7
1.6
1.5
1.4
1.3
1.2
1.1
0
5
10
15
20
25
30
35
40
45
Time (Seconds)

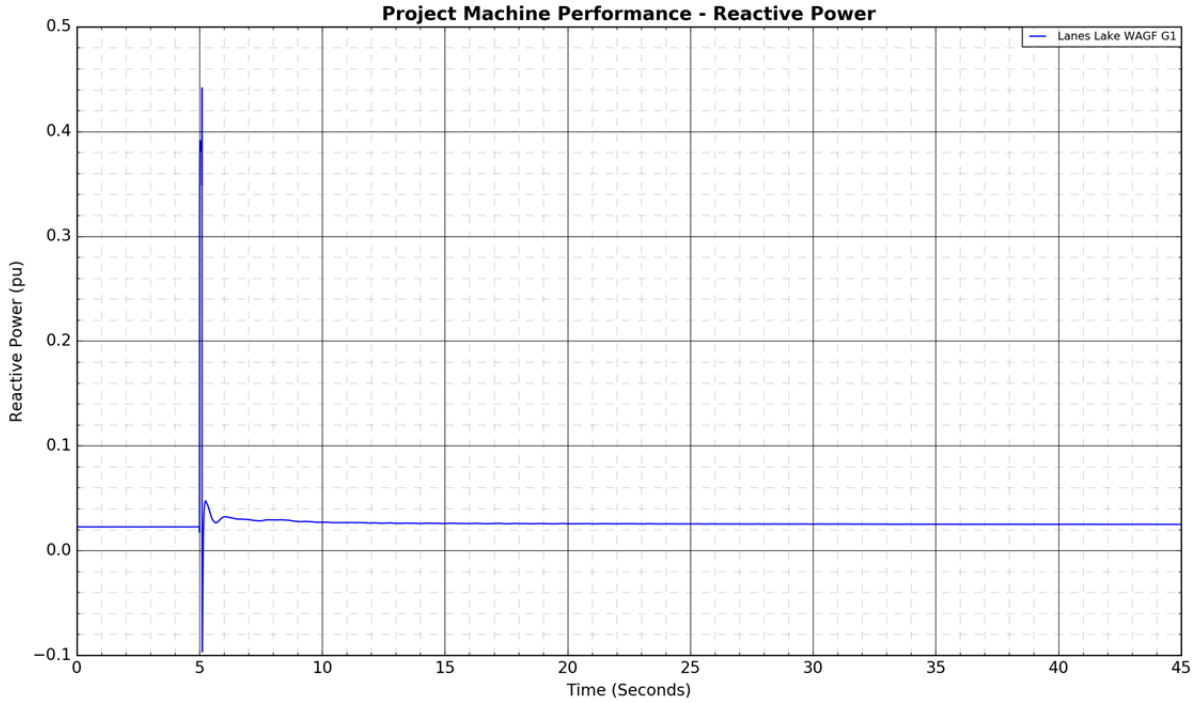
Project Machine Performance - Reactive Power
Lanes Lake WAGF G1
Reactive Power (pu)
0.5
0.4
0.3
0.2
0.1
0.0
−0.1
0
5
10
15
20
25
30
35
40
45
Time (Seconds)


Branch Active Power Flows
9L93 (Pioneer 805S - Halkirk 615S)
9L175 (Pioneer 805S - Tincherbray 972S)
9L16 (Tincherbray 972S - Cordel 755S)
9L59 (Anderson 801S - Tinchebray 972S)
Active Power (MW)
Time (Seconds)

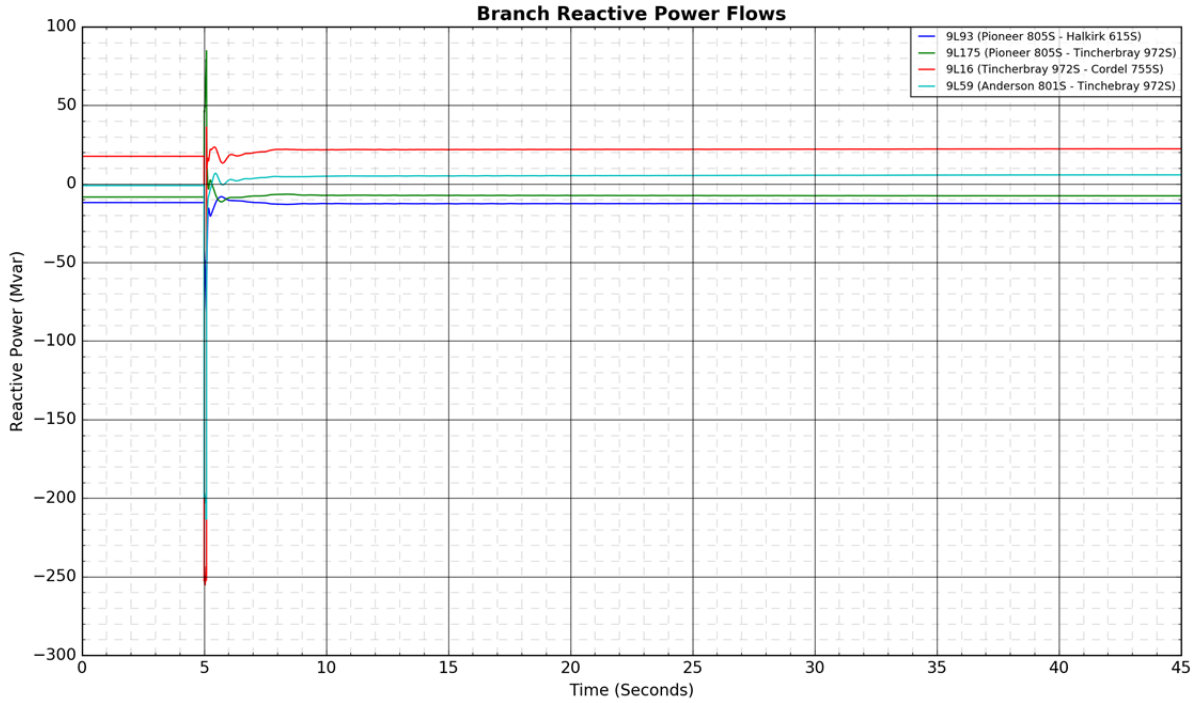
Branch Reactive Power Flows
9L93 (Pioneer 805S - Halkirk 615S)
9L175 (Pioneer 805S - Tincherbray 972S)
9L16 (Tincherbray 972S - Cordel 755S)
9L59 (Anderson 801S - Tinchebray 972S)
Reactive Power (Mvar)
Time (Seconds)

Figure A4-75: 9L20 (Cordel 755S - Nevis 766S): 3-phase fault at Cordel 755S

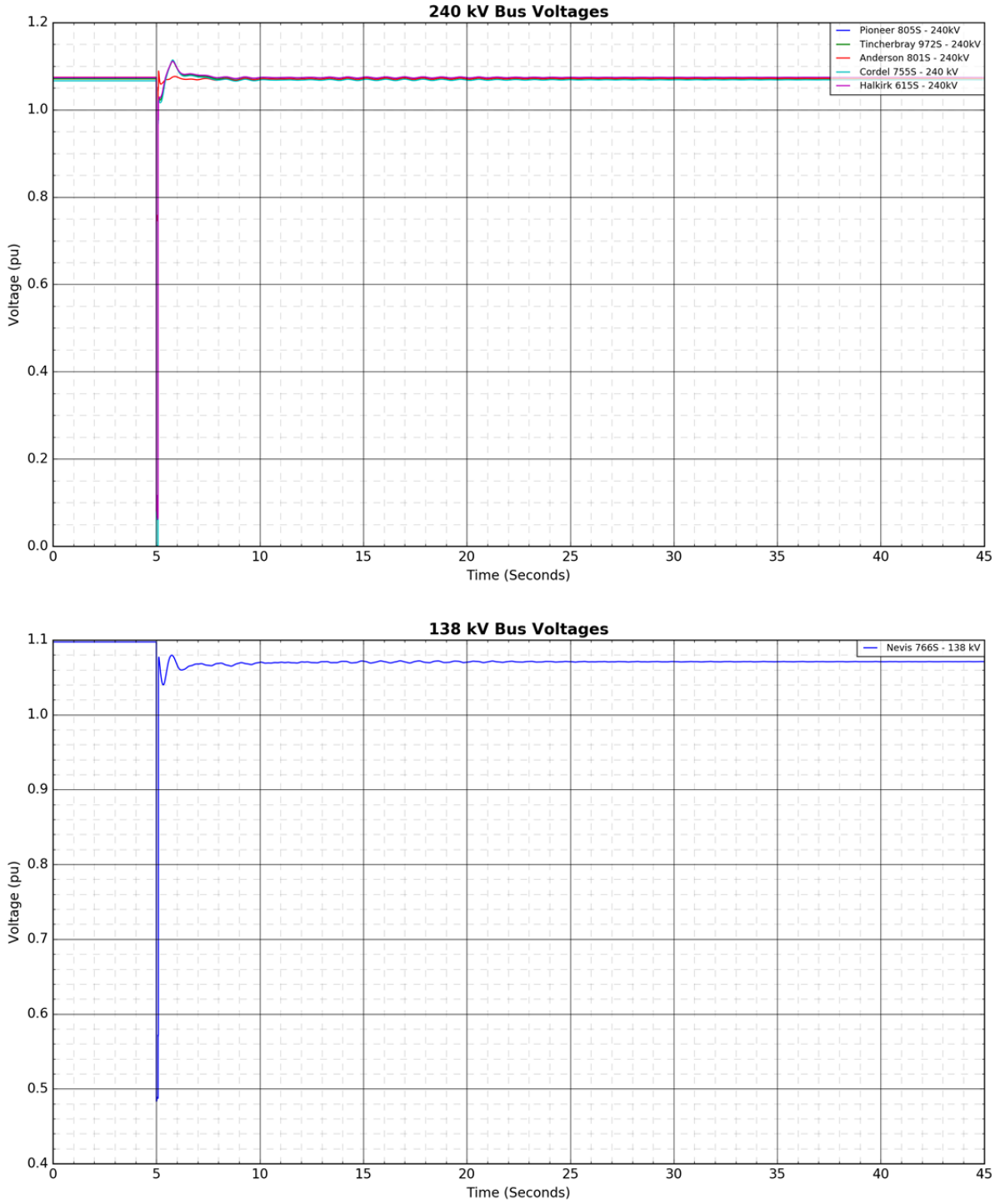

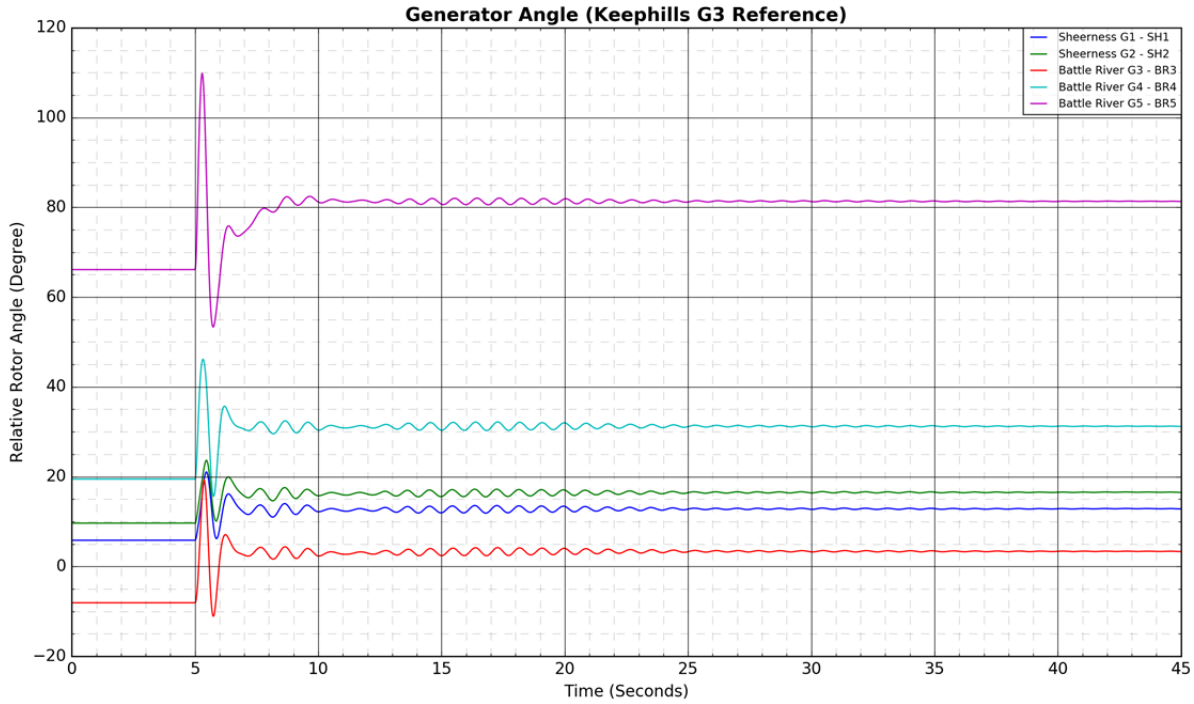
Generator Angle (Keephills G3 Reference)
Relative Rotor Angle (Degree)
Time (Seconds)
Sheerness G1 - SH1
Sheerness G2 - SH2
Battle River G3 - BR3
Battle River G4 - BR4
Battle River G5 - BR5

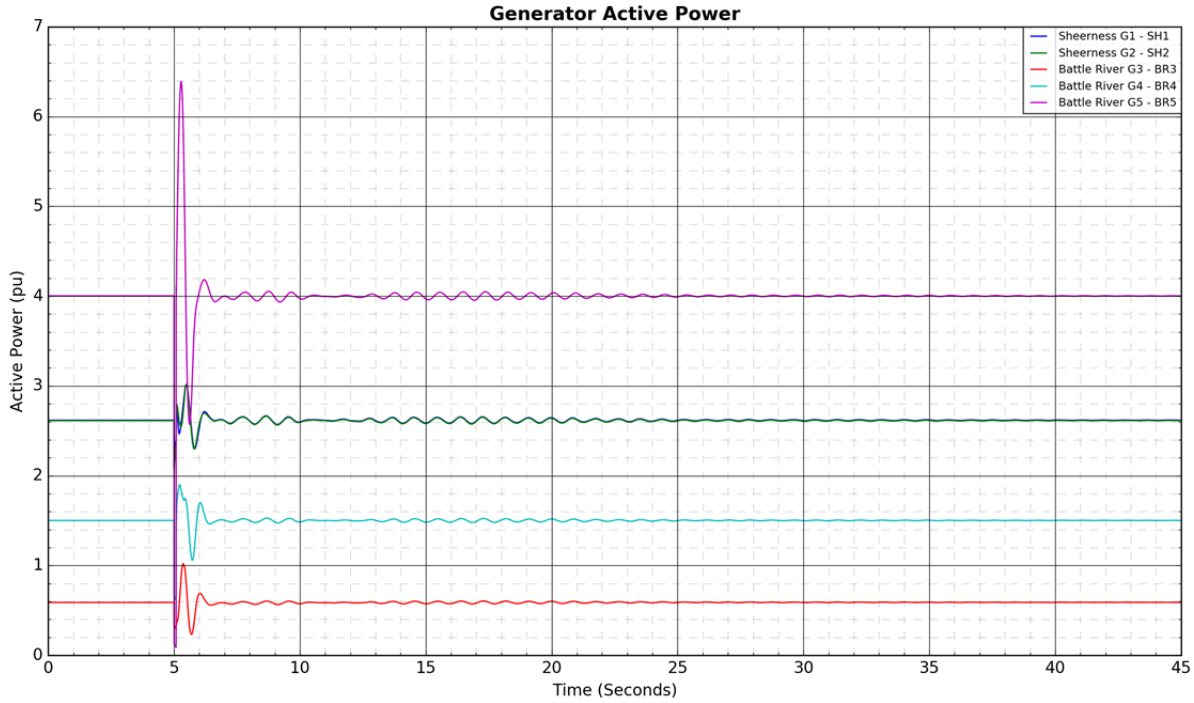
Generator Active Power
Active Power (pu)
Time (Seconds)
Sheerness G1 - SH1
Sheerness G2 - SH2
Battle River G3 - BR3
Battle River G4 - BR4
Battle River G5 - BR5

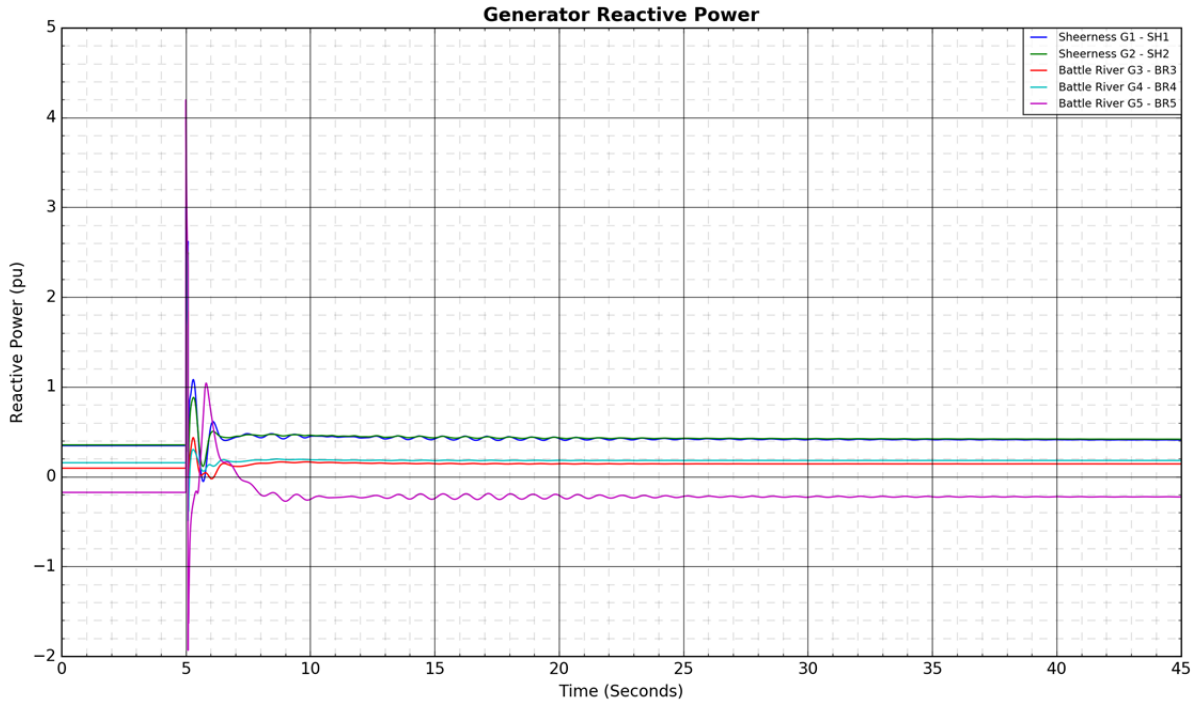
Generator Reactive Power
Sheerness G1 - SH1
Sheerness G2 - SH2
Battle River G3 - BR3
Battle River G4 - BR4
Battle River G5 - BR5
Reactive Power (pu)
Time (Seconds)

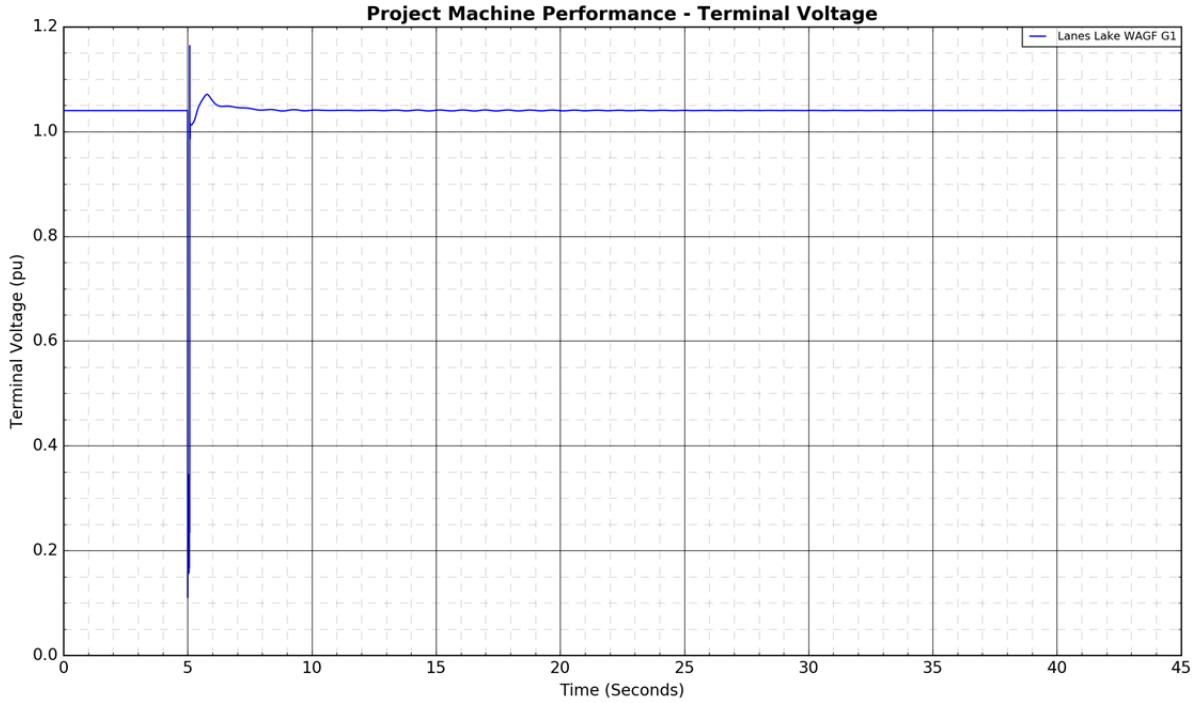
Project Machine Performance - Terminal Voltage
Lanes Lake WAGF G1
Terminal Voltage (pu)
Time (Seconds)


Project Machine Performance - Active Power
Lanes Lake WAGF G1
Active Power (pu)
Time (Seconds)
1.6
1.4
1.2
1.0
0.8
0.6
0.4
0.2
0.0
0
5
10
15
20
25
30
35
40
45

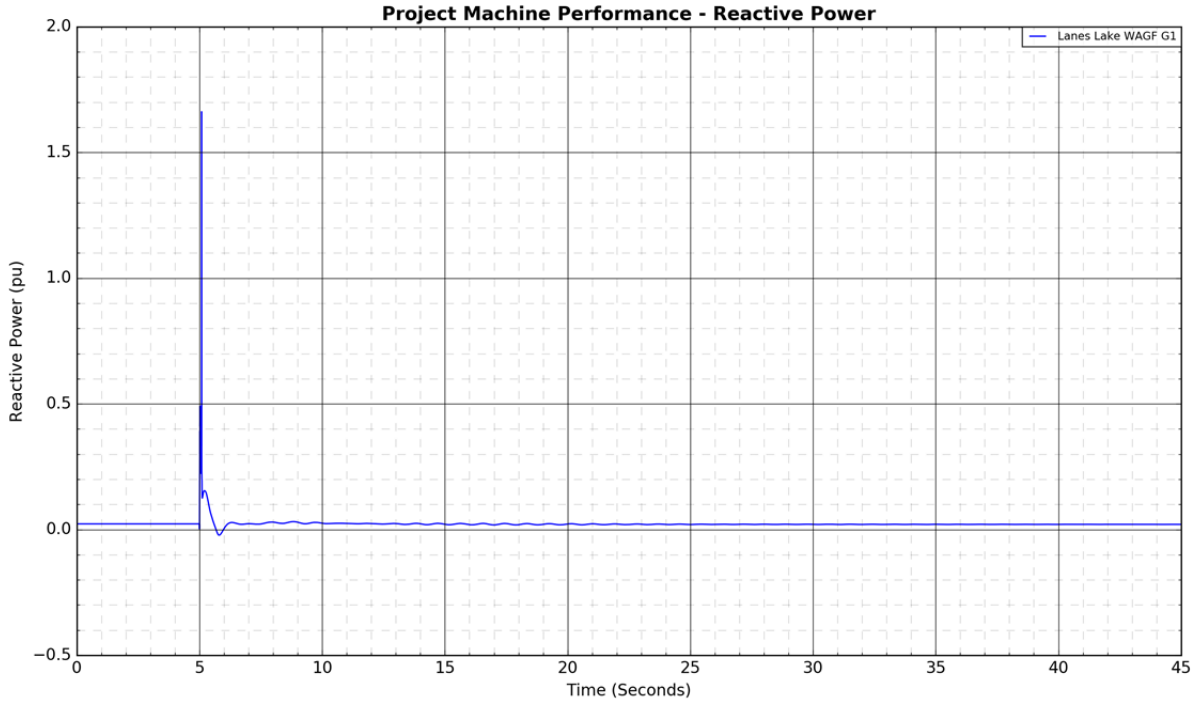
Project Machine Performance - Reactive Power
Lanes Lake WAGF G1
Reactive Power (pu)
Time (Seconds)
2.0
1.5
1.0
0.5
0.0
−0.5
0
5
10
15
20
25
30
35
40
45

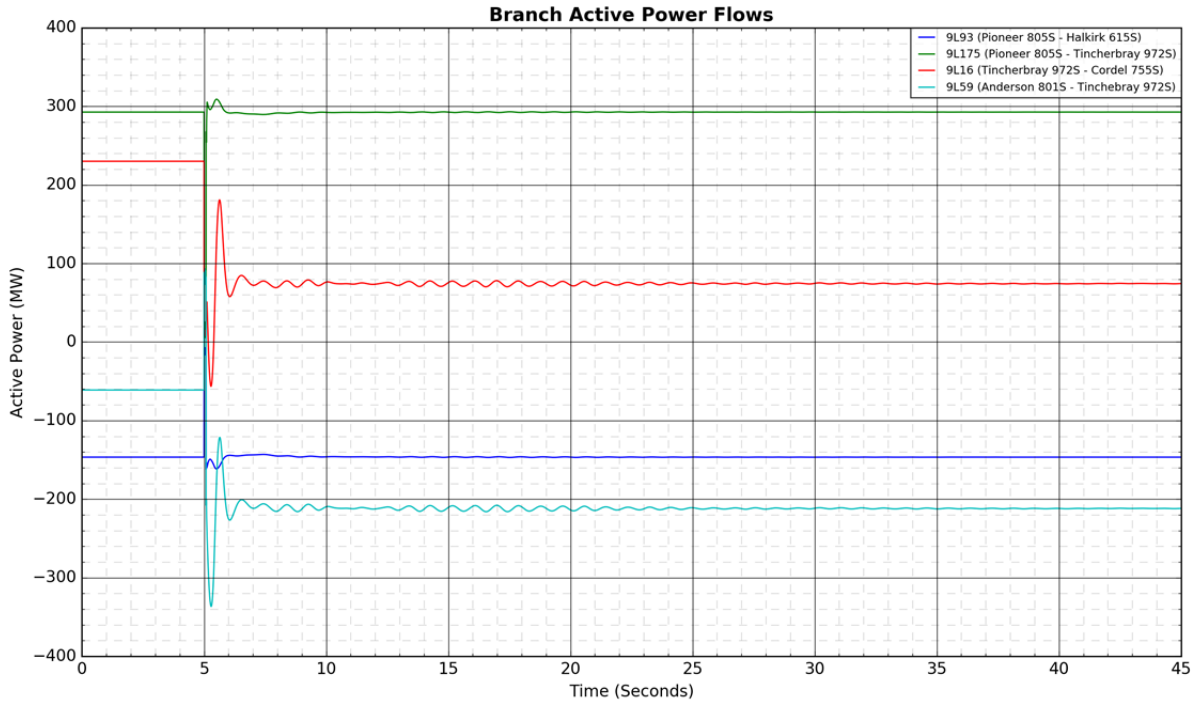
Branch Active Power Flows
9L93 (Pioneer 805S - Halkirk 615S)
9L175 (Pioneer 805S - Tincherbray 972S)
9L16 (Tincherbray 972S - Cordel 755S)
9L59 (Anderson 801S - Tinchebray 972S)
Active Power (MW)
Time (Seconds)

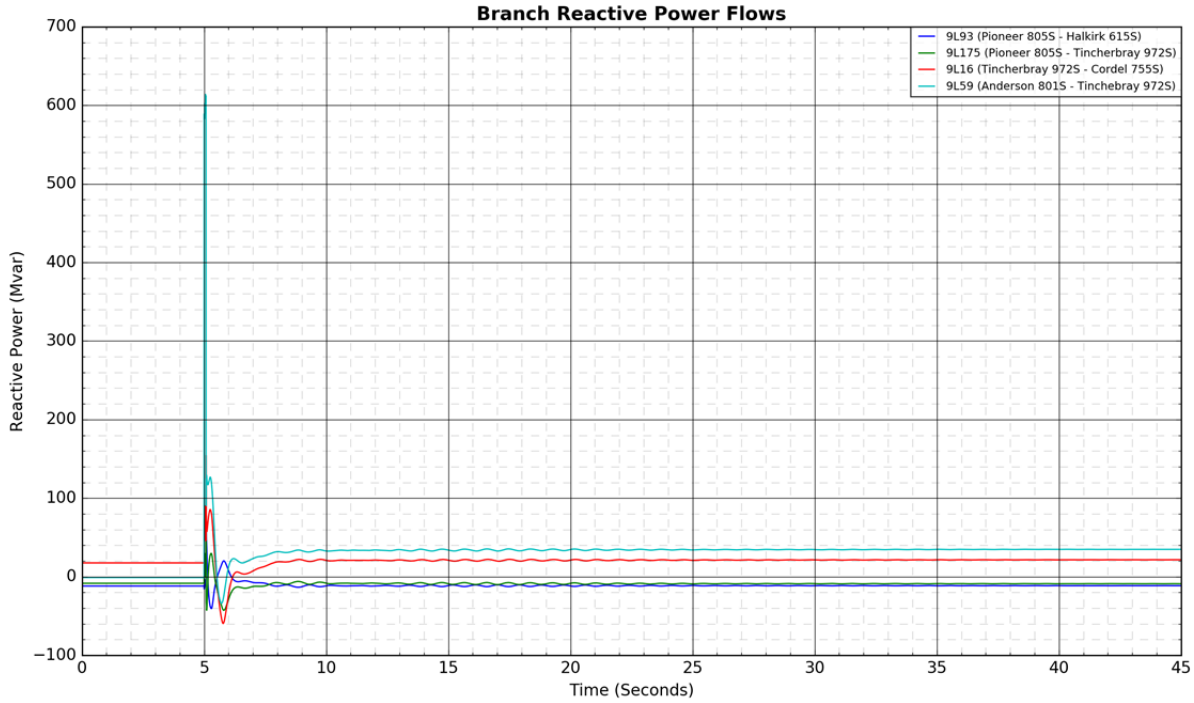
Branch Reactive Power Flows
9L93 (Pioneer 805S - Halkirk 615S)
9L175 (Pioneer 805S - Tincherbray 972S)
9L16 (Tincherbray 972S - Cordel 755S)
9L59 (Anderson 801S - Tinchebray 972S)
Reactive Power (Mvar)
Time (Seconds)

Figure A4-76: 9L20 (Cordel 755S - Nevis 766S): 3-phase fault at Nevis 766S

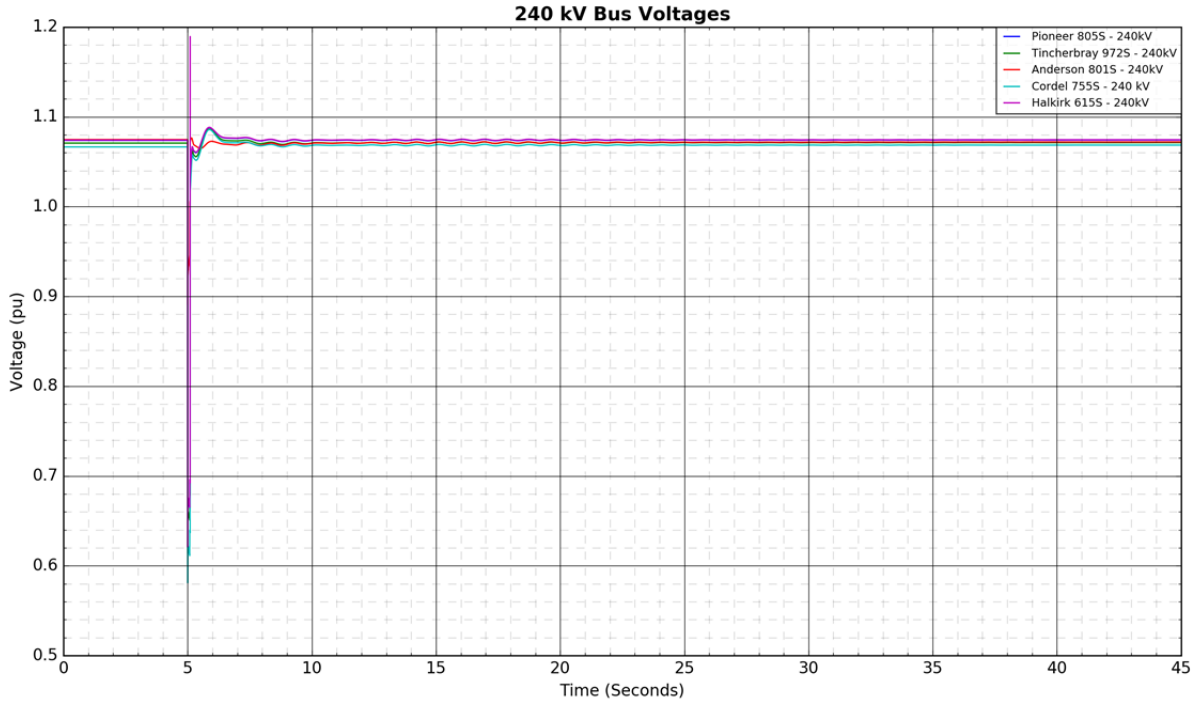

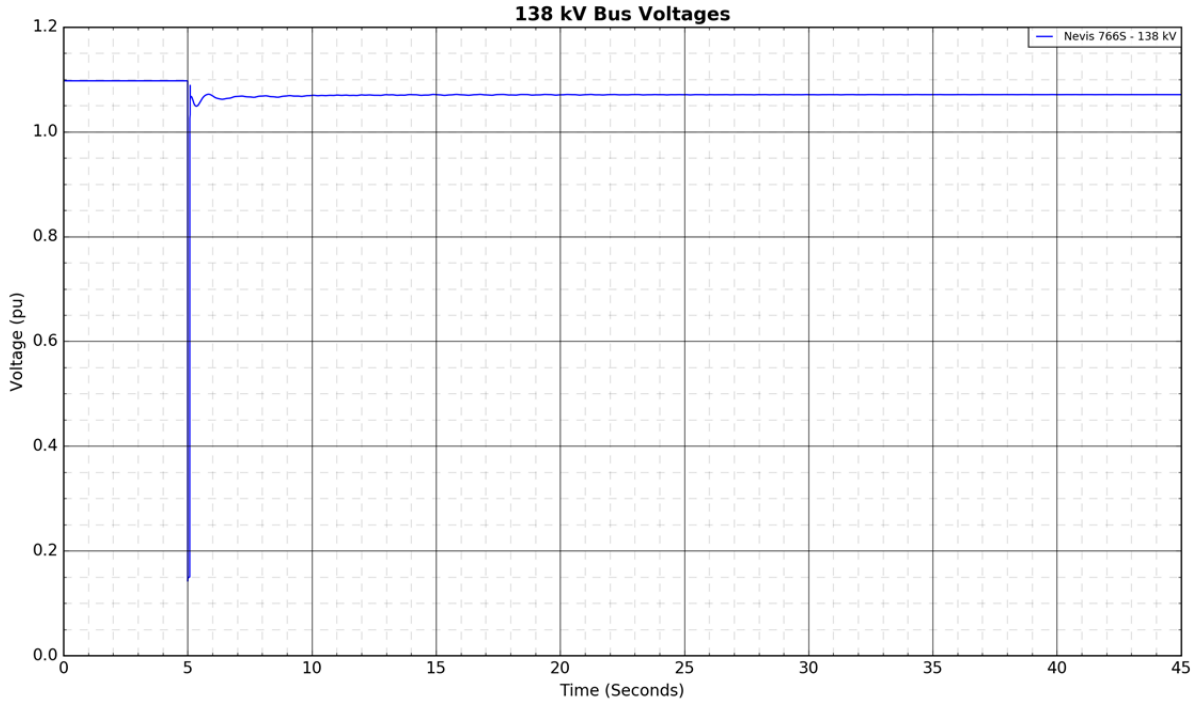

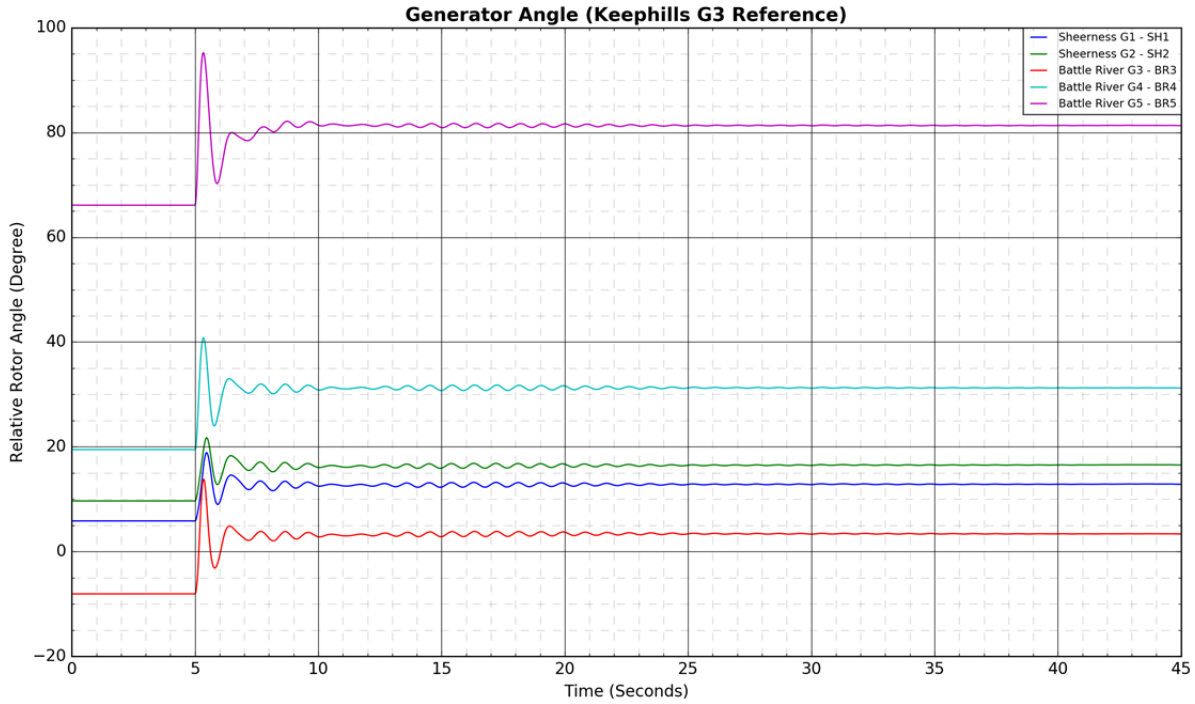
Generator Angle (Keephills G3 Reference)
Relative Rotor Angle (Degree)
Time (Seconds)
Sheerness G1 - SH1
Sheerness G2 - SH2
Battle River G3 - BR3
Battle River G4 - BR4
Battle River G5 - BR5

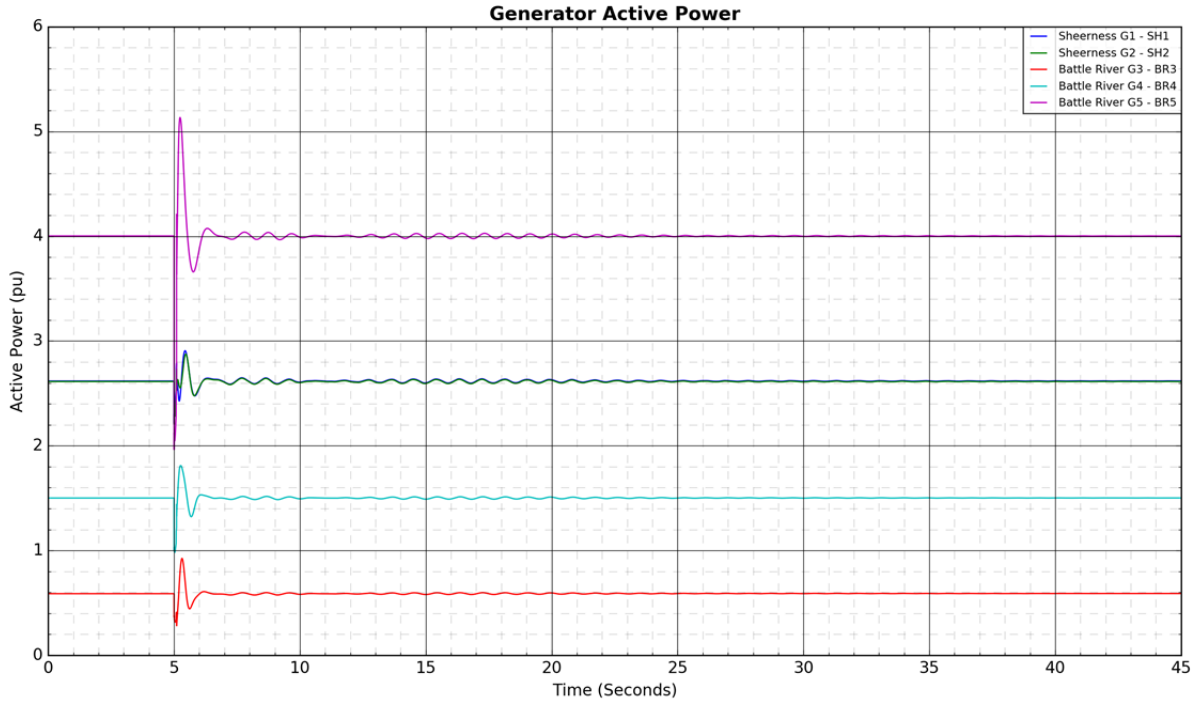
Generator Active Power
Active Power (pu)
Time (Seconds)
Sheerness G1 - SH1
Sheerness G2 - SH2
Battle River G3 - BR3
Battle River G4 - BR4
Battle River G5 - BR5

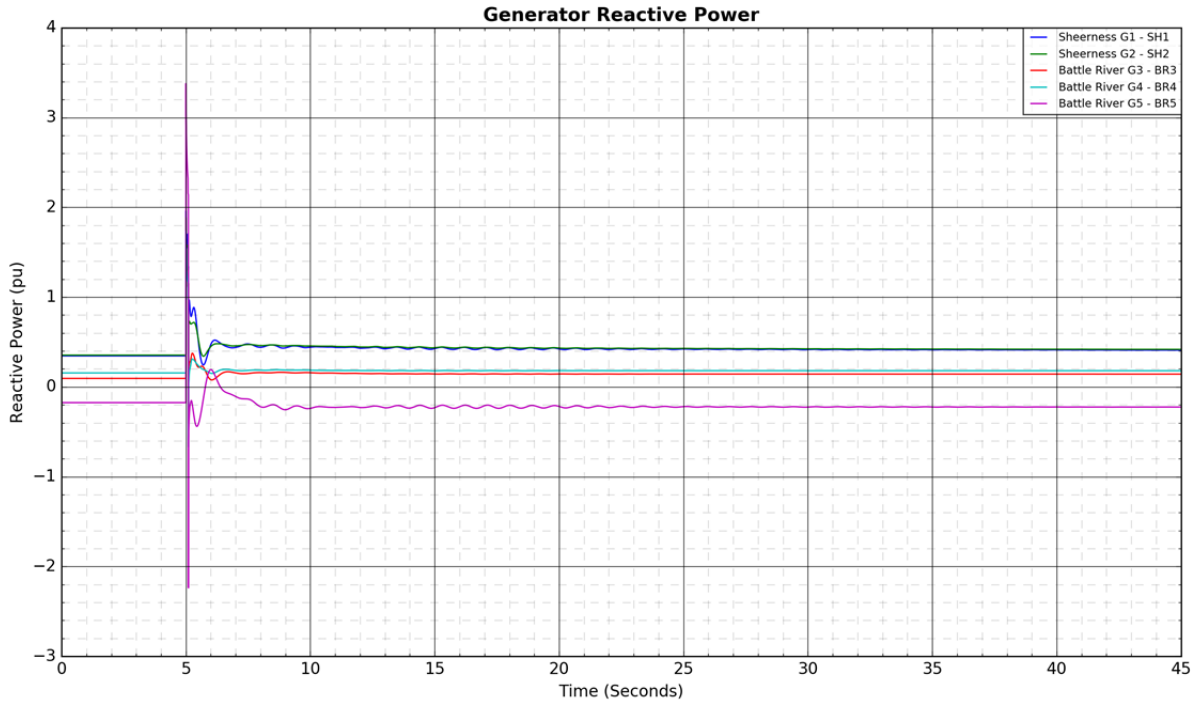
Generator Reactive Power
Sheerness G1 - SH1
Sheerness G2 - SH2
Battle River G3 - BR3
Battle River G4 - BR4
Battle River G5 - BR5
Reactive Power (pu)
Time (Seconds)

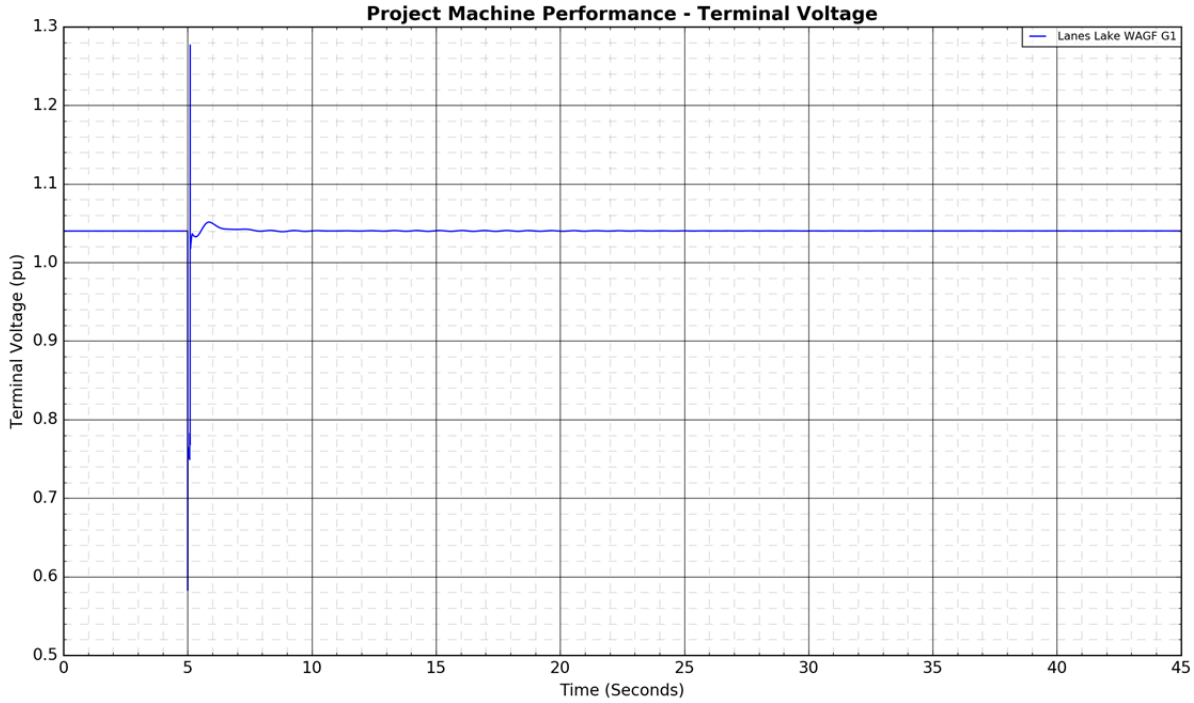
Project Machine Performance - Terminal Voltage
Lanes Lake WAGF G1
Terminal Voltage (pu)
Time (Seconds)


Project Machine Performance - Active Power
Lanes Lake WAGF G1
Active Power (pu)
Time (Seconds)
2.6
2.4
2.2
2.0
1.8
1.6
1.4
1.2
1.0
0.8
0
5
10
15
20
25
30
35
40
45

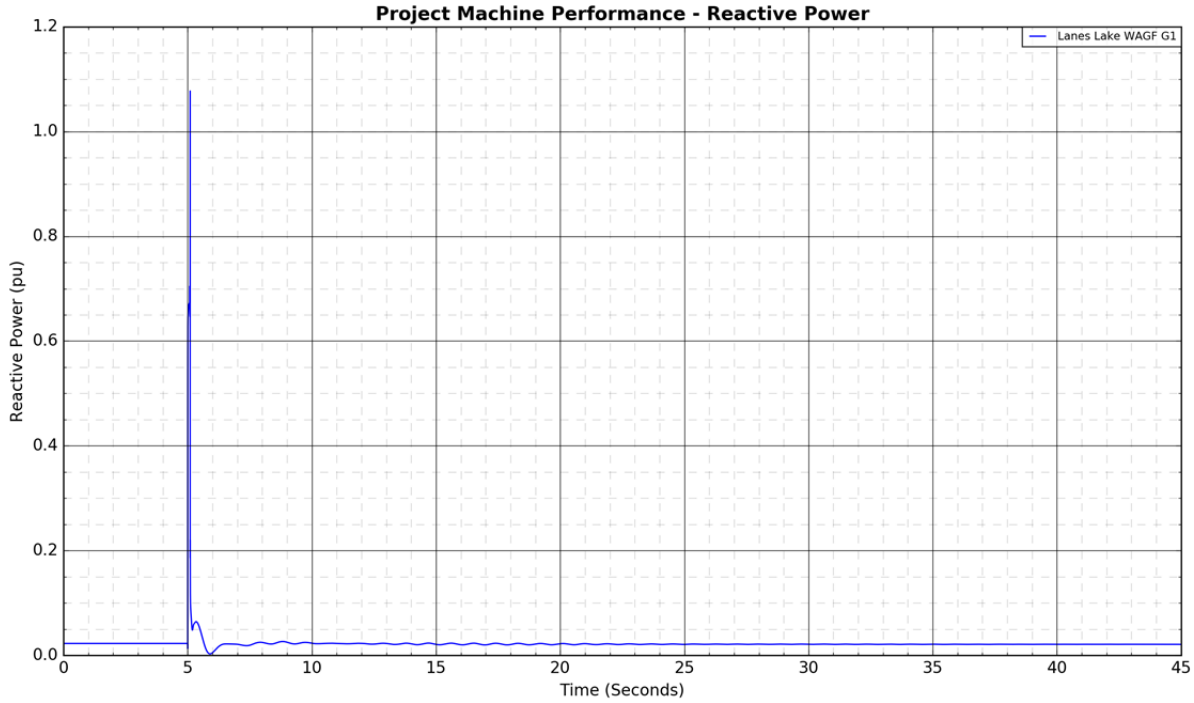
Project Machine Performance - Reactive Power
Lanes Lake WAGF G1
Reactive Power (pu)
Time (Seconds)
1.2
1.0
0.8
0.6
0.4
0.2
0.0
0
5
10
15
20
25
30
35
40
45

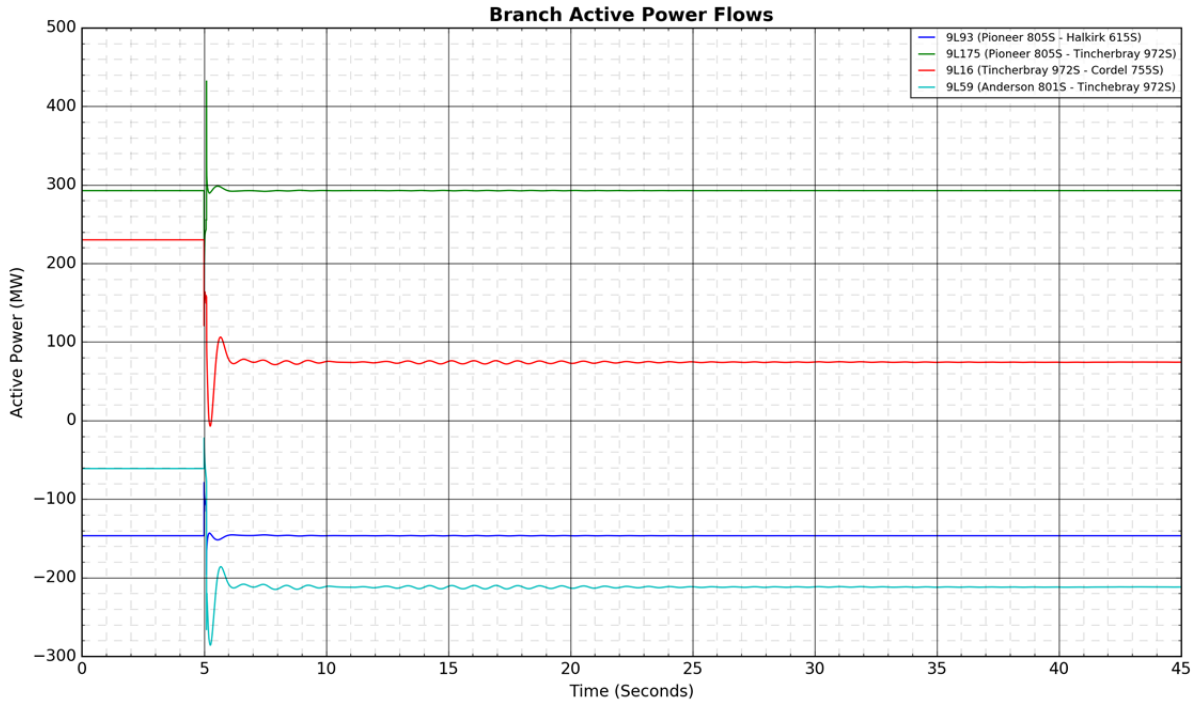
Branch Active Power Flows
9L93 (Pioneer 805S - Halkirk 615S)
9L175 (Pioneer 805S - Tincherbray 972S)
9L16 (Tincherbray 972S - Cordel 755S)
9L59 (Anderson 801S - Tinchebray 972S)
Active Power (MW)
Time (Seconds)

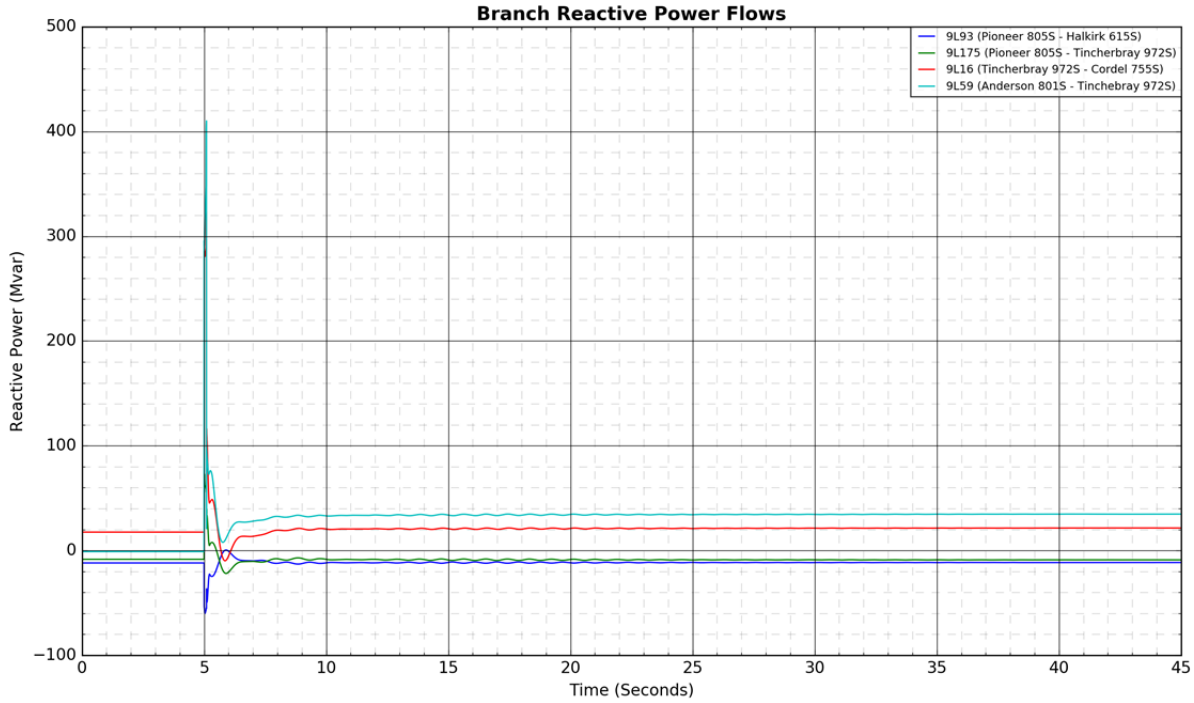
Branch Reactive Power Flows
9L93 (Pioneer 805S - Halkirk 615S)
9L175 (Pioneer 805S - Tincherbray 972S)
9L16 (Tincherbray 972S - Cordel 755S)
9L59 (Anderson 801S - Tinchebray 972S)
Reactive Power (Mvar)
Time (Seconds)

Figure A4-77: 9L16 (Tinchebray 972S - Cordel 755S): 3-phase fault at Cordel 755S

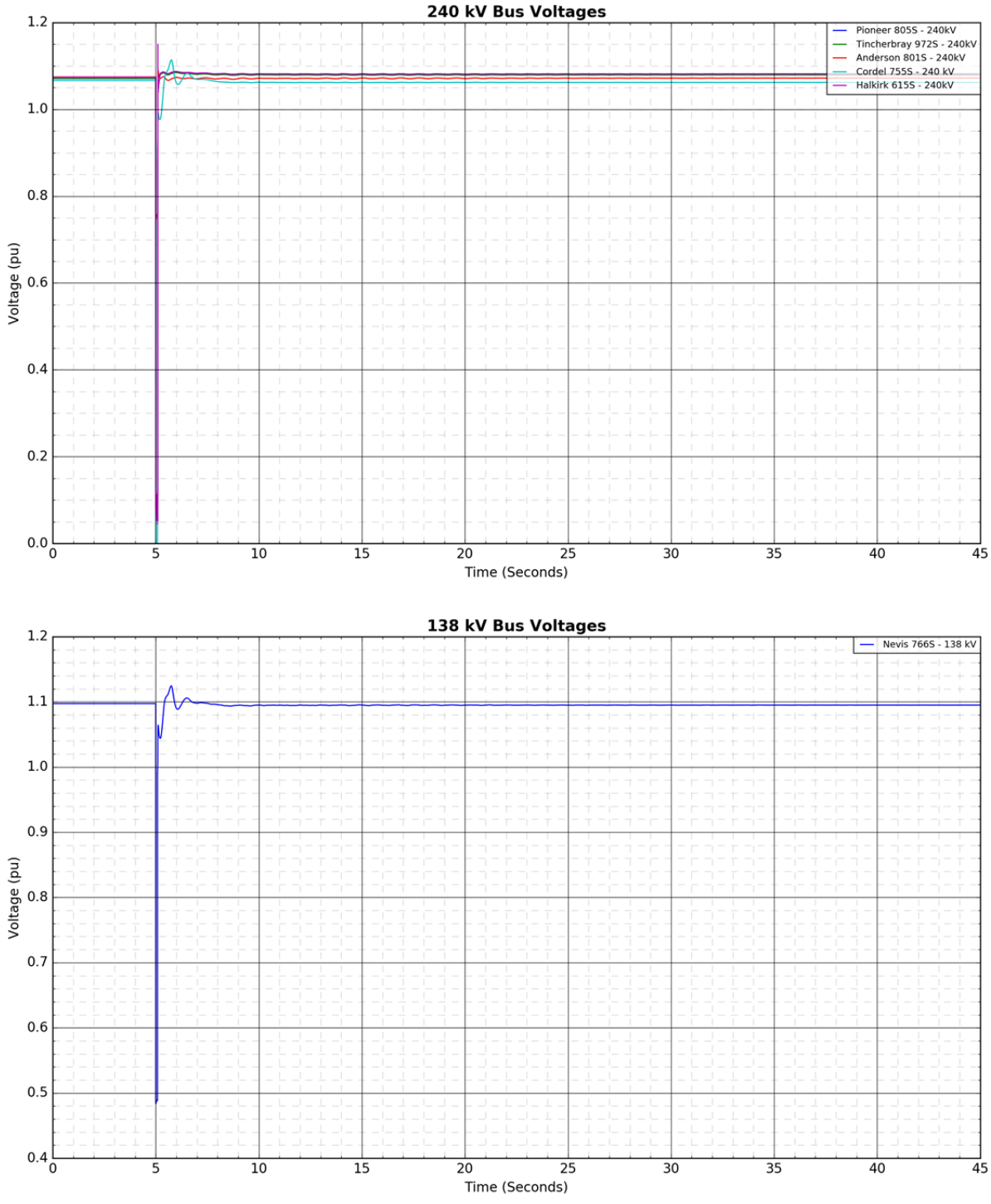

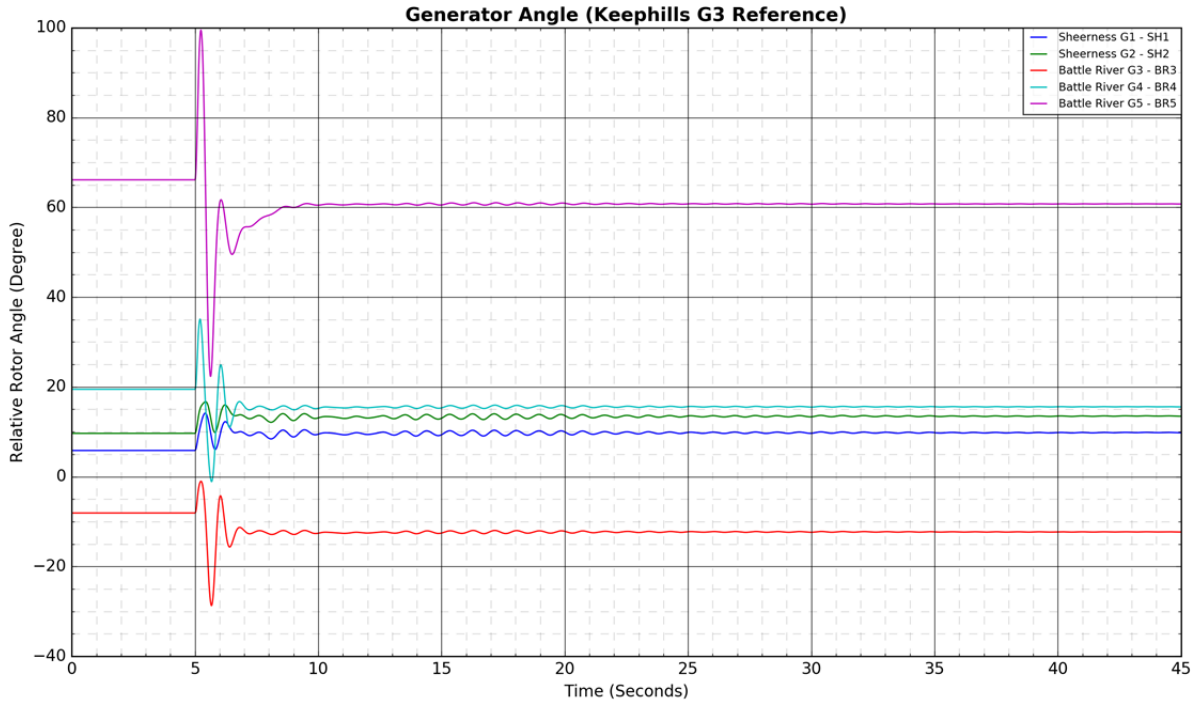
Generator Angle (Keephills G3 Reference)
Relative Rotor Angle (Degree)
Time (Seconds)
Sheerness G1 - SH1
Sheerness G2 - SH2
Battle River G3 - BR3
Battle River G4 - BR4
Battle River G5 - BR5

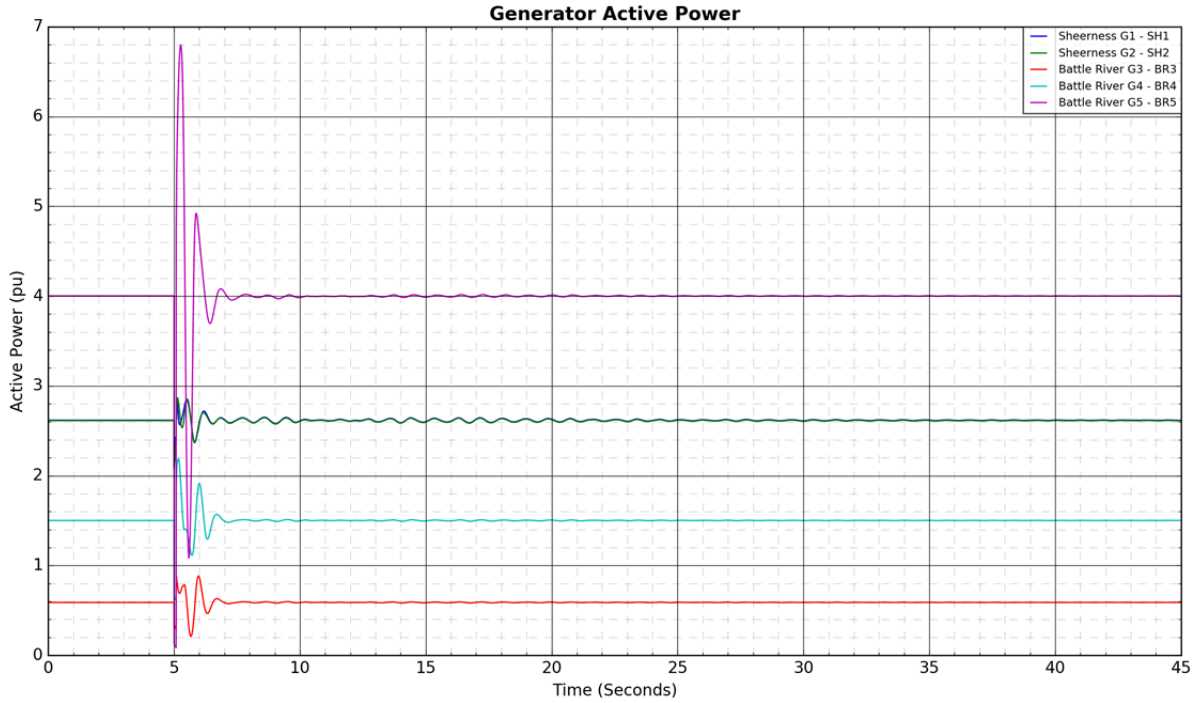
Generator Active Power
Active Power (pu)
Time (Seconds)
Sheerness G1 - SH1
Sheerness G2 - SH2
Battle River G3 - BR3
Battle River G4 - BR4
Battle River G5 - BR5

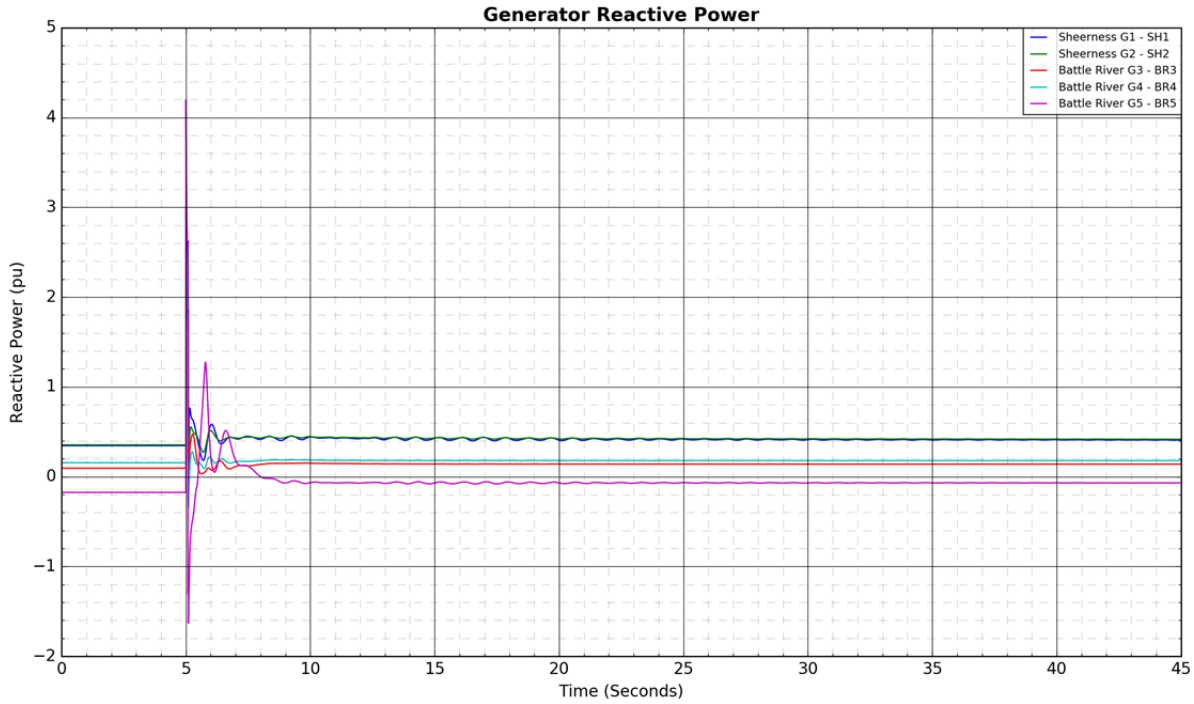
Generator Reactive Power
Sheerness G1 - SH1
Sheerness G2 - SH2
Battle River G3 - BR3
Battle River G4 - BR4
Battle River G5 - BR5
Reactive Power (pu)
Time (Seconds)

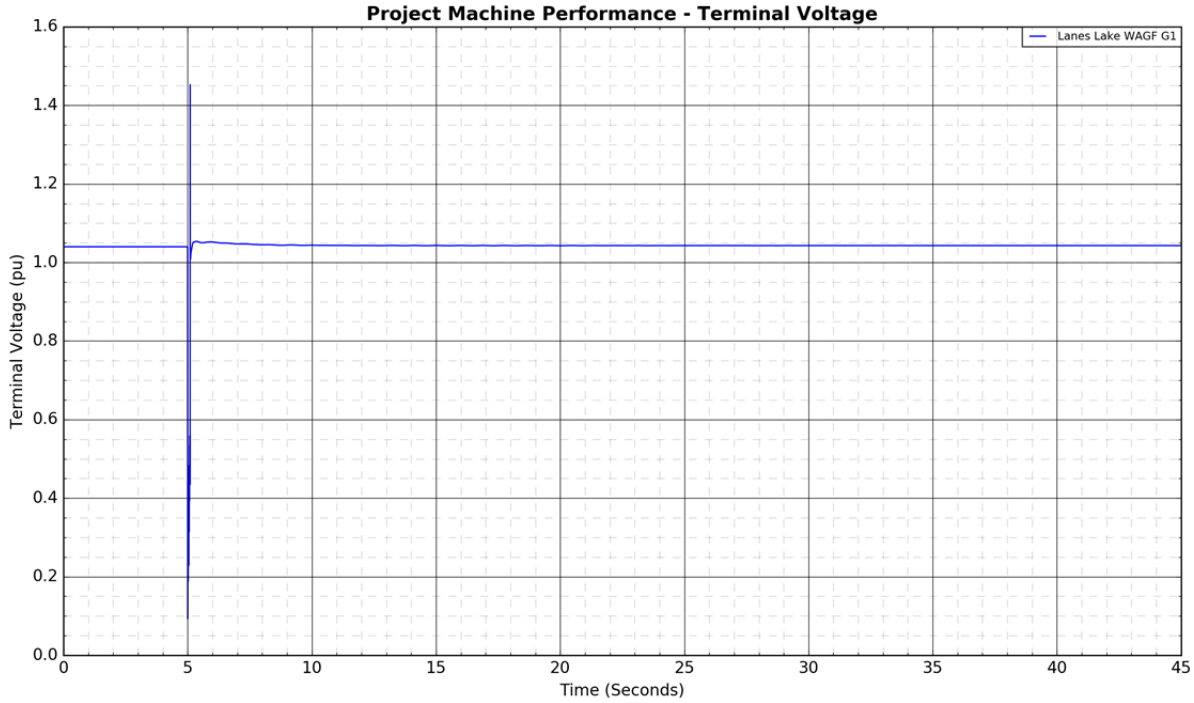
Project Machine Performance - Terminal Voltage
Lanes Lake WAGF G1
Terminal Voltage (pu)
Time (Seconds)


Project Machine Performance - Active Power
Lanes Lake WAGF G1
Active Power (pu)
Time (Seconds)
2.5
2.0
1.5
1.0
0.5
0.0
0
5
10
15
20
25
30
35
40
45

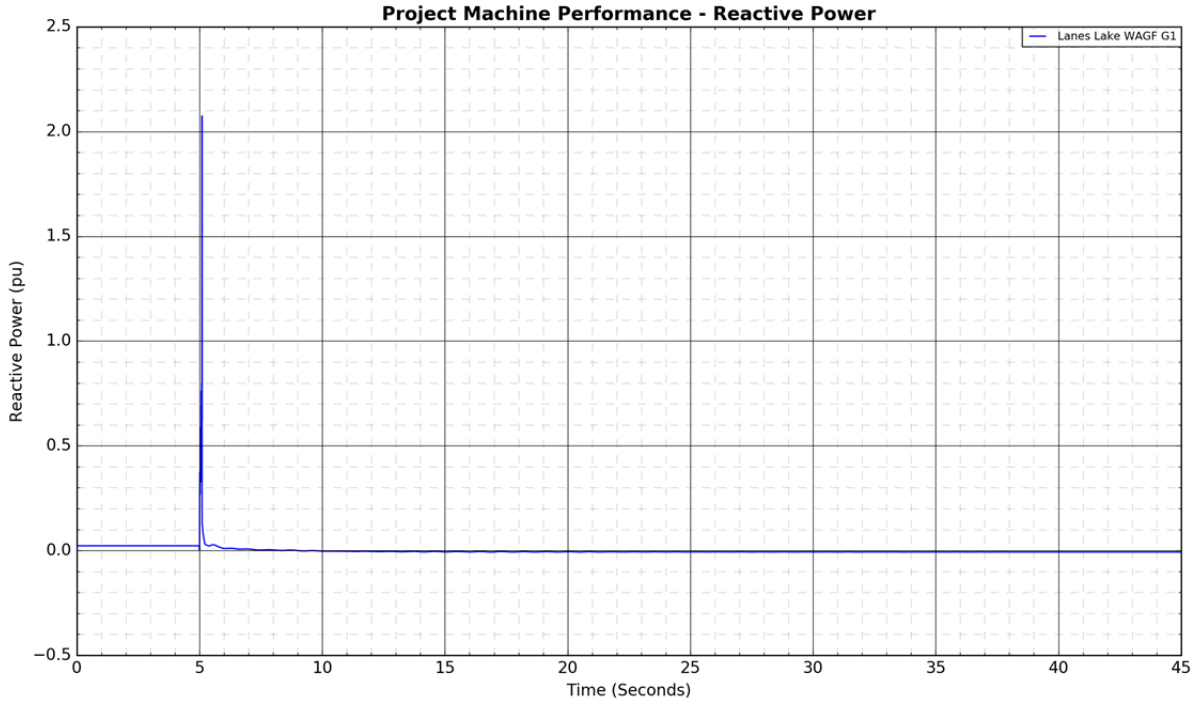
Project Machine Performance - Reactive Power
Lanes Lake WAGF G1
Reactive Power (pu)
Time (Seconds)
2.5
2.0
1.5
1.0
0.5
0.0
−0.5
0
5
10
15
20
25
30
35
40
45

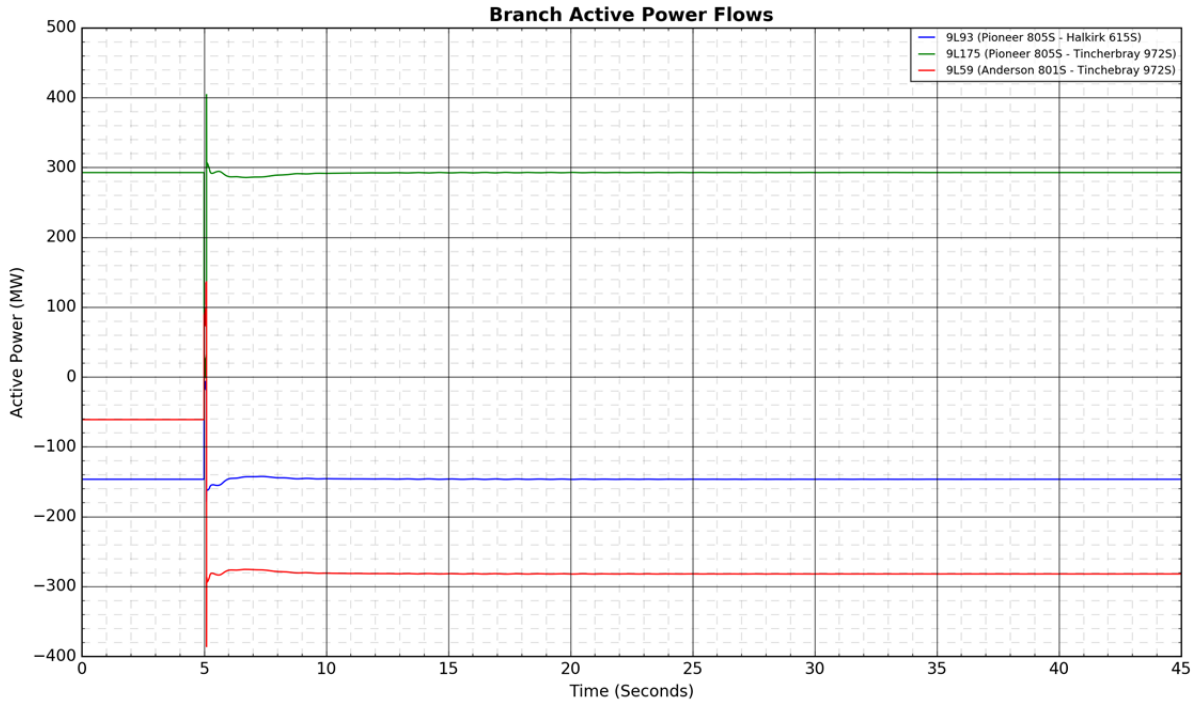
Branch Active Power Flows
9L93 (Pioneer 805S - Halkirk 615S)
9L175 (Pioneer 805S - Tincherbray 972S)
9L59 (Anderson 801S - Tinchebray 972S)
Active Power (MW)
Time (Seconds)

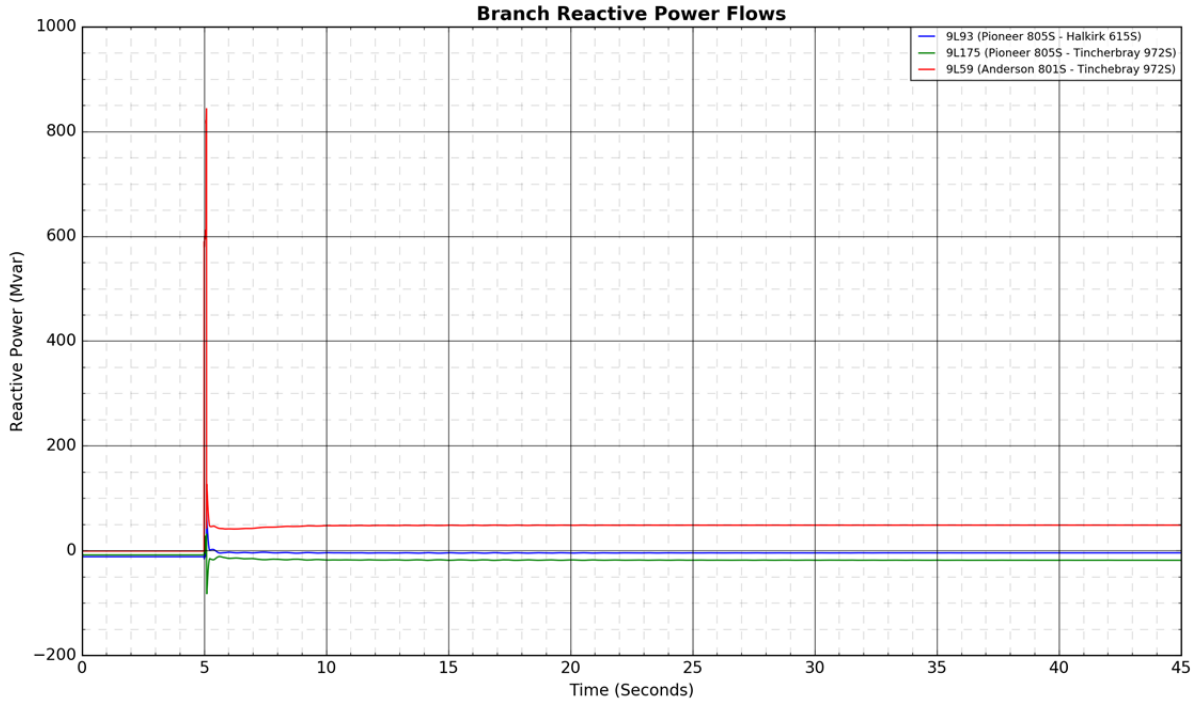
Branch Reactive Power Flows
9L93 (Pioneer 805S - Halkirk 615S)
9L175 (Pioneer 805S - Tincherbray 972S)
9L59 (Anderson 801S - Tinchebray 972S)
Reactive Power (Mvar)
Time (Seconds)

Figure A4-78: 9L16 (Tinchebray 972S - Cordel 755S): 3-phase fault at Tinchebray 972S



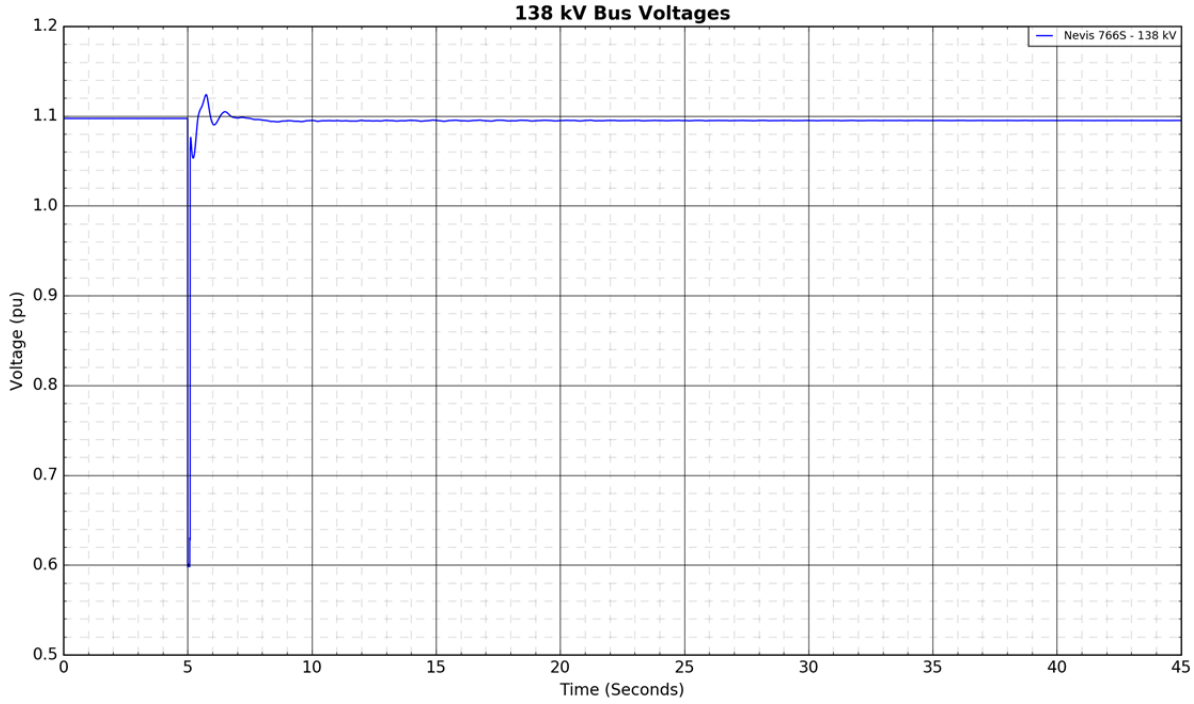

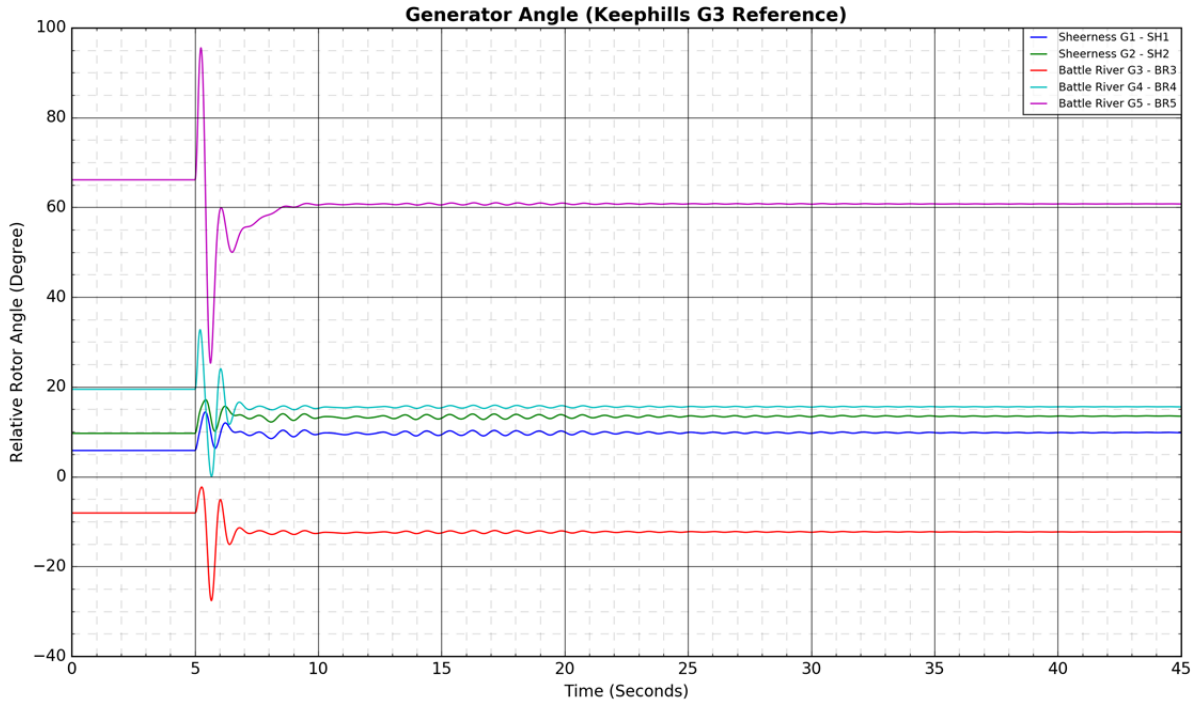
Generator Angle (Keephills G3 Reference)
Relative Rotor Angle (Degree)
Time (Seconds)
Sheerness G1 - SH1
Sheerness G2 - SH2
Battle River G3 - BR3
Battle River G4 - BR4
Battle River G5 - BR5

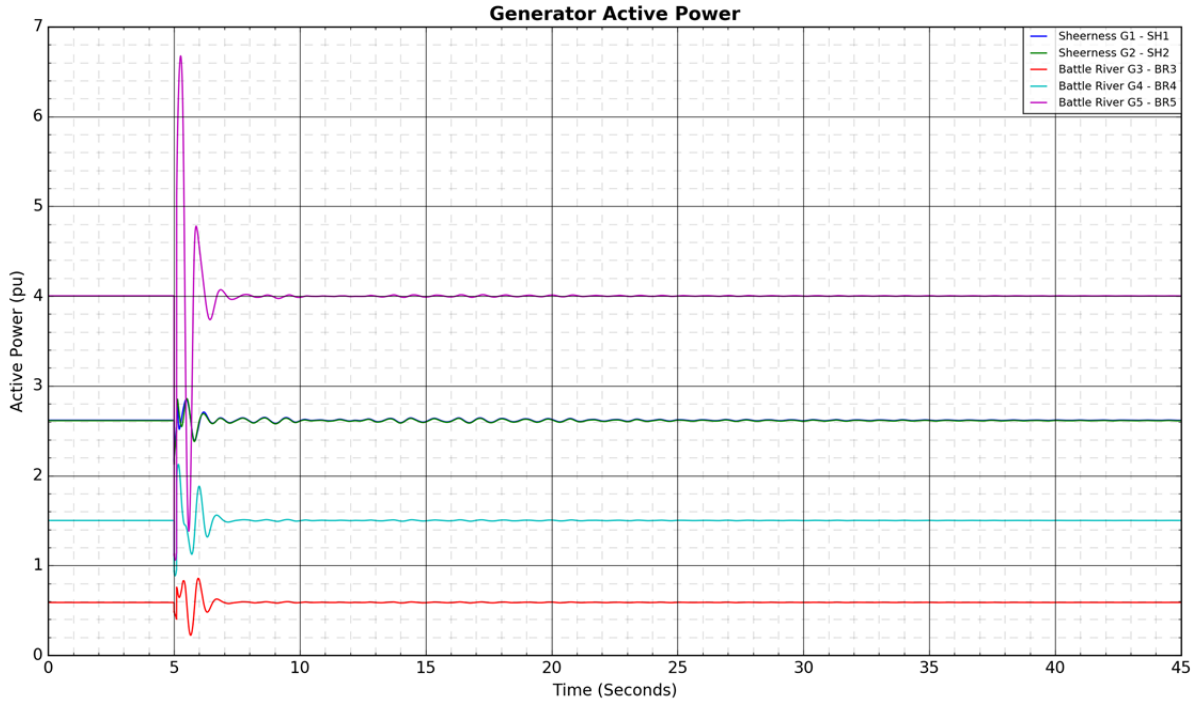
Generator Active Power
Active Power (pu)
Time (Seconds)
Sheerness G1 - SH1
Sheerness G2 - SH2
Battle River G3 - BR3
Battle River G4 - BR4
Battle River G5 - BR5

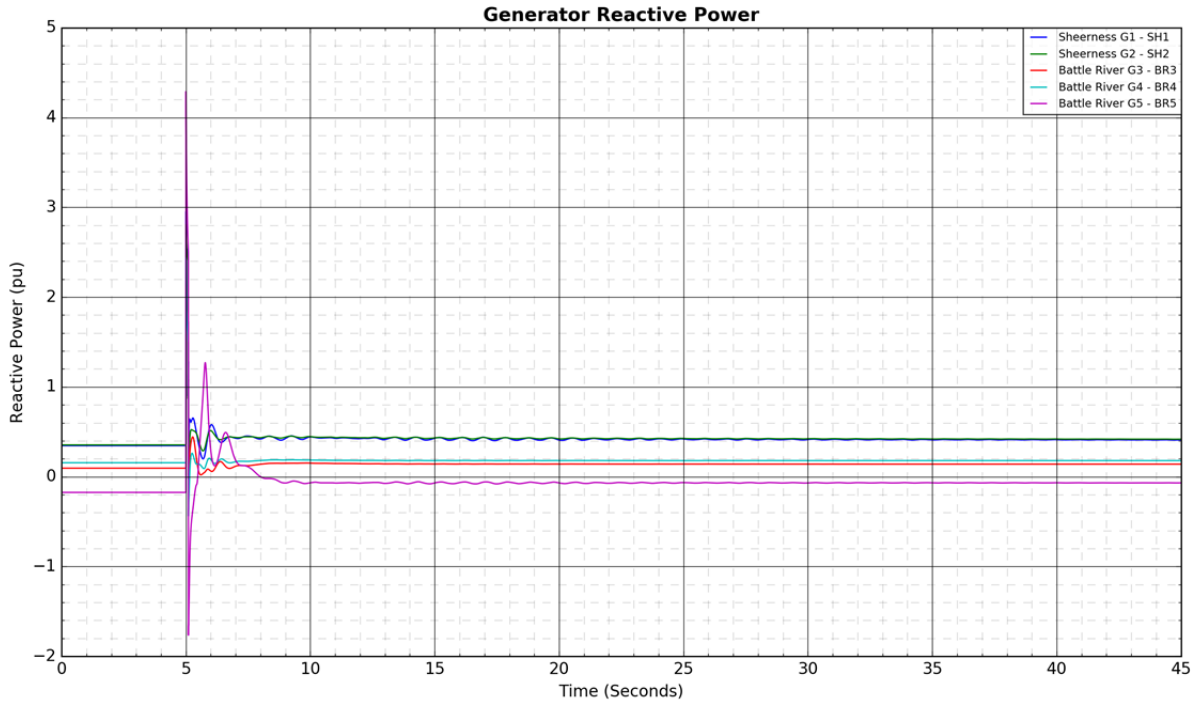
Generator Reactive Power
Sheerness G1 - SH1
Sheerness G2 - SH2
Battle River G3 - BR3
Battle River G4 - BR4
Battle River G5 - BR5
Reactive Power (pu)
Time (Seconds)

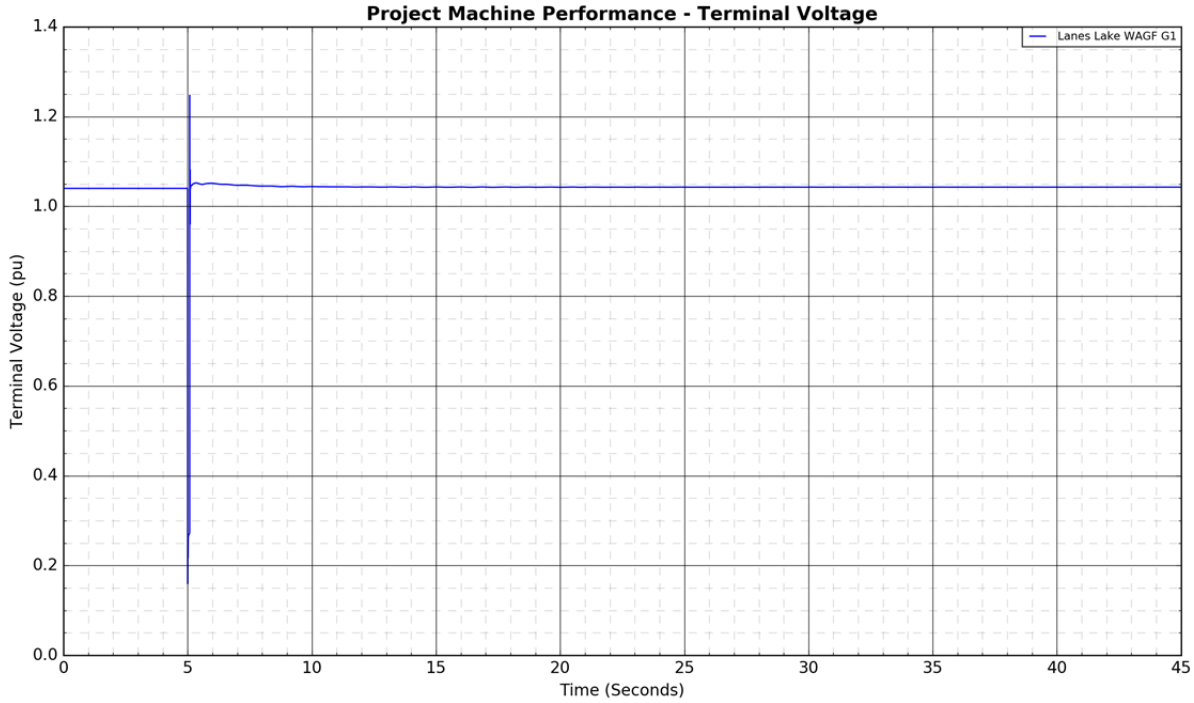
Project Machine Performance - Terminal Voltage
Lanes Lake WAGF G1
Terminal Voltage (pu)
Time (Seconds)

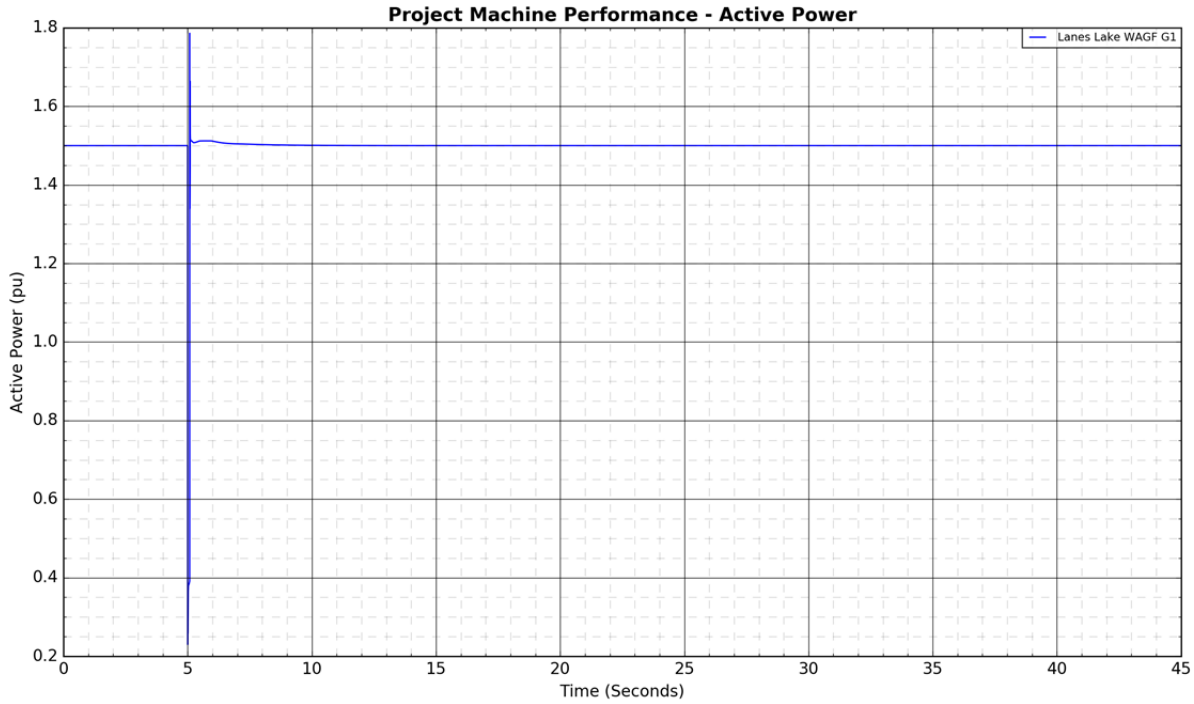
Project Machine Performance - Active Power
Lanes Lake WAGF G1
Active Power (pu)
Time (Seconds)
1.8
1.6
1.4
1.2
1.0
0.8
0.6
0.4
0.2
0
5
10
15
20
25
30
35
40
45

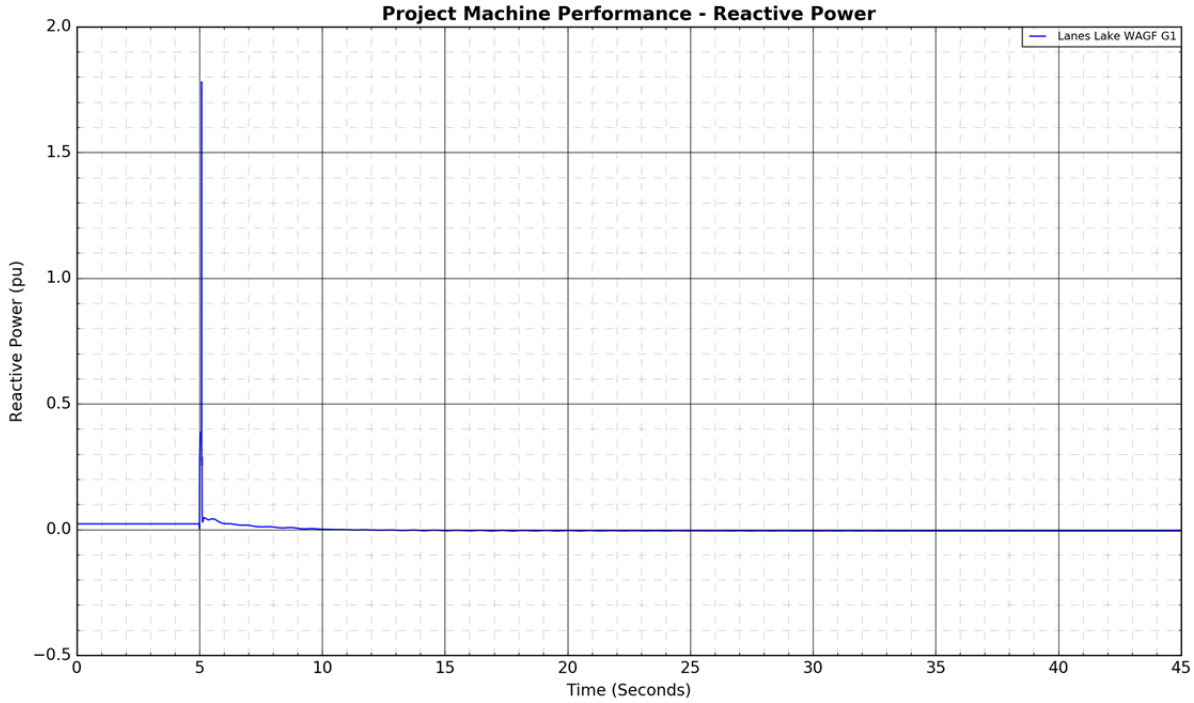
Project Machine Performance - Reactive Power
Lanes Lake WAGF G1
Reactive Power (pu)
Time (Seconds)
2.0
1.5
1.0
0.5
0.0
−0.5
0
5
10
15
20
25
30
35
40
45


Branch Active Power Flows
9L93 (Pioneer 805S - Halkirk 615S)
9L175 (Pioneer 805S - Tincherbray 972S)
9L59 (Anderson 801S - Tinchebray 972S)
Active Power (MW)
Time (Seconds)

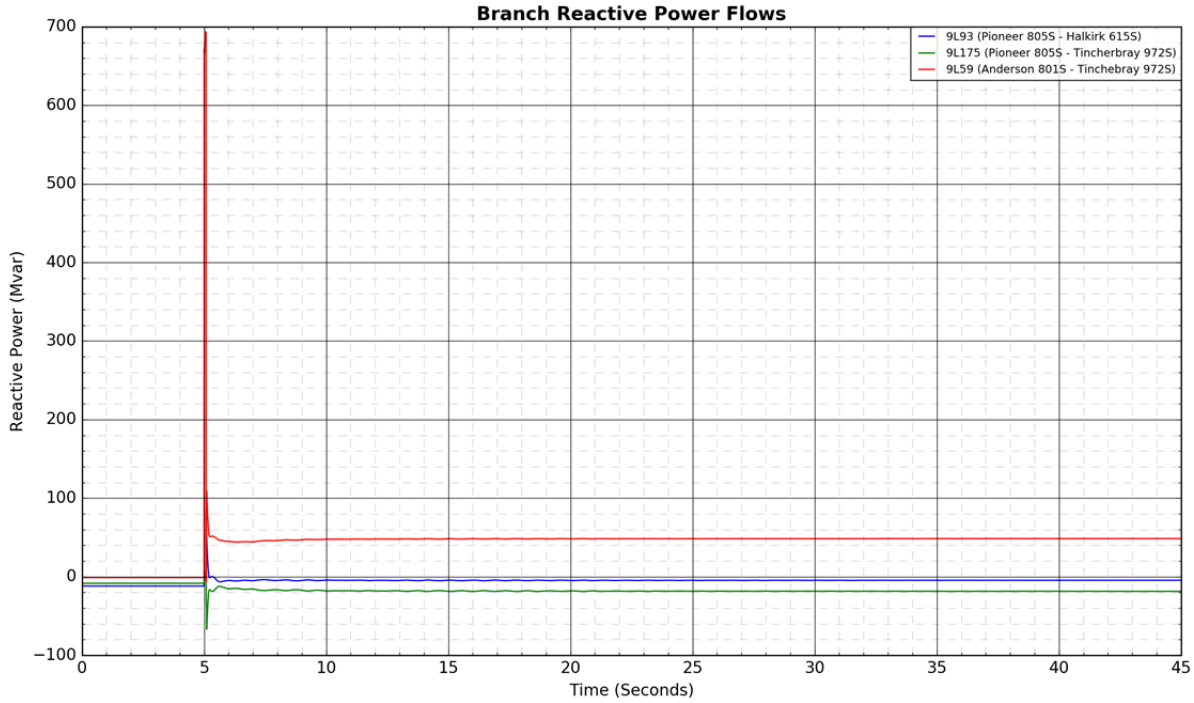
Branch Reactive Power Flows
9L93 (Pioneer 805S - Halkirk 615S)
9L175 (Pioneer 805S - Tincherbray 972S)
9L59 (Anderson 801S - Tinchebray 972S)
Reactive Power (Mvar)
Time (Seconds)

Figure A4-79: 9L59 (Anderson 801S - Tinchebray 972S): 3-phase fault at Anderson 801S

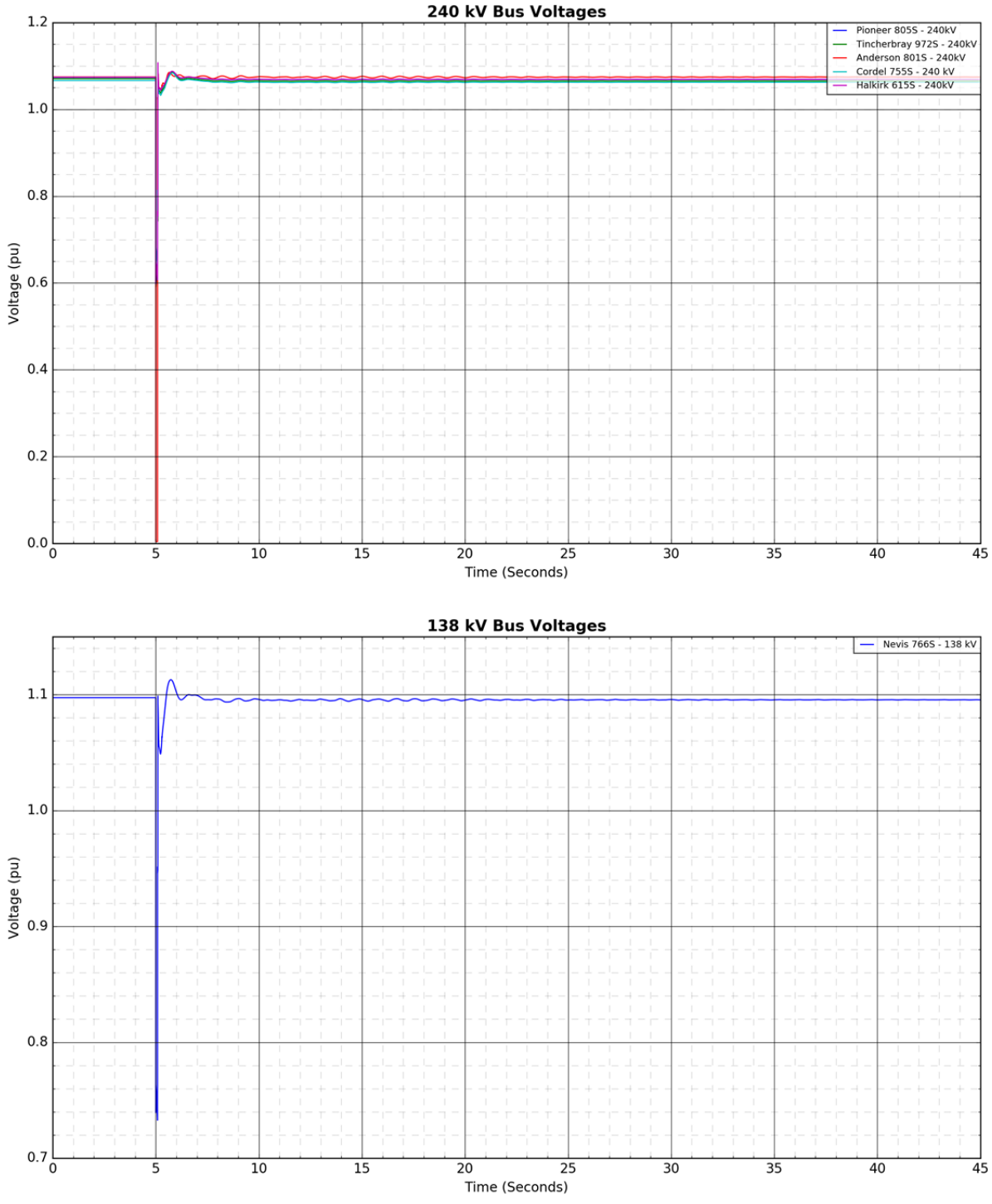

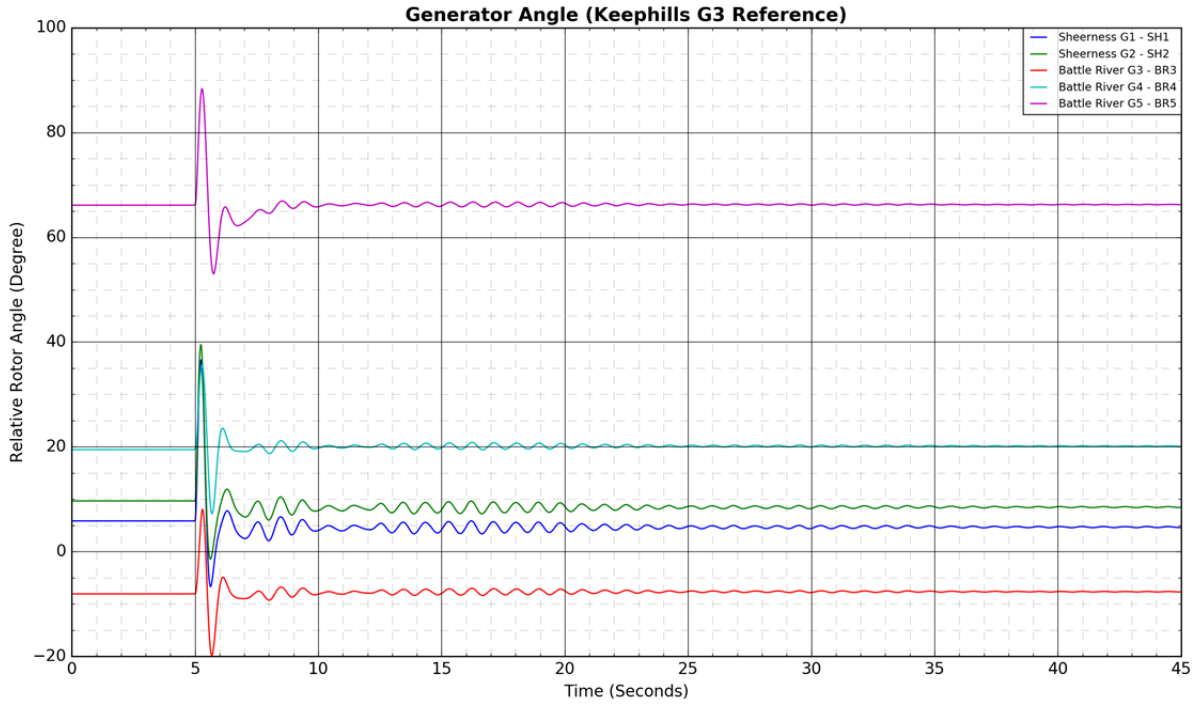
Generator Angle (Keephills G3 Reference)
Relative Rotor Angle (Degree)
Time (Seconds)
Sheerness G1 - SH1
Sheerness G2 - SH2
Battle River G3 - BR3
Battle River G4 - BR4
Battle River G5 - BR5

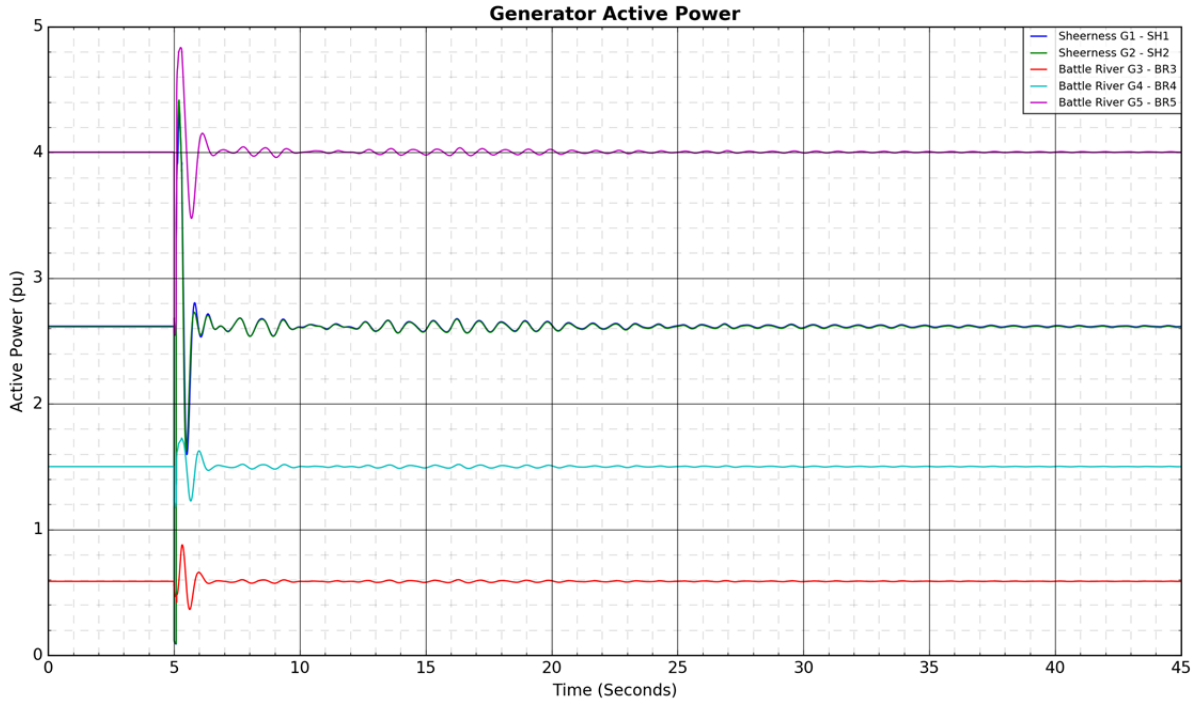
Generator Active Power
Active Power (pu)
Time (Seconds)
Sheerness G1 - SH1
Sheerness G2 - SH2
Battle River G3 - BR3
Battle River G4 - BR4
Battle River G5 - BR5

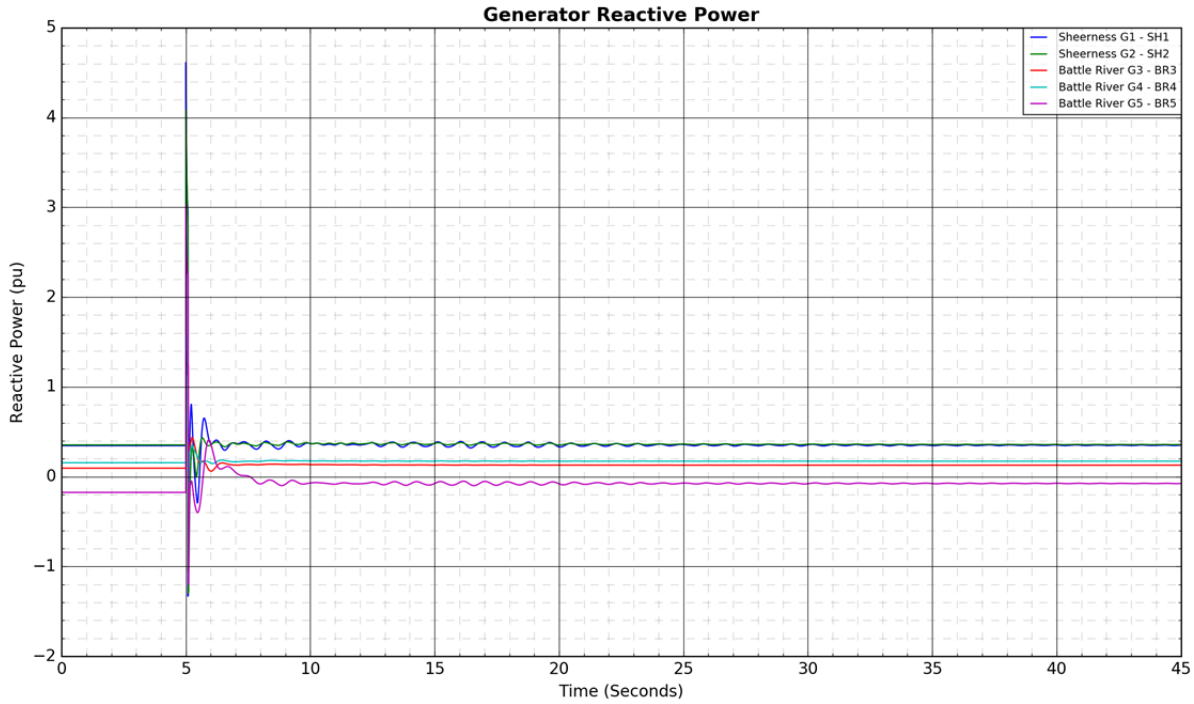
Generator Reactive Power
Sheerness G1 - SH1
Sheerness G2 - SH2
Battle River G3 - BR3
Battle River G4 - BR4
Battle River G5 - BR5
Reactive Power (pu)
Time (Seconds)

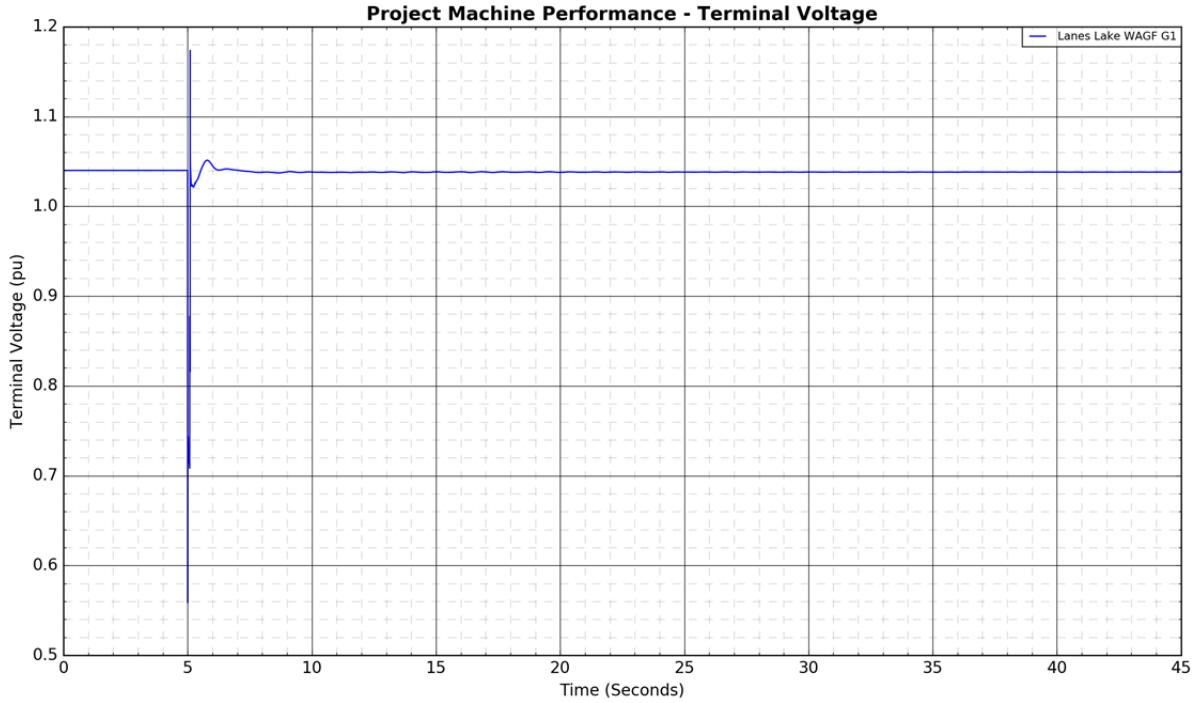
Project Machine Performance - Terminal Voltage
Lanes Lake WAGF G1
Terminal Voltage (pu)
Time (Seconds)


Project Machine Performance - Active Power
Lanes Lake WAGF G1
Active Power (pu)
Time (Seconds)
2.2
2.0
1.8
1.6
1.4
1.2
1.0
0.8
0
5
10
15
20
25
30
35
40
45

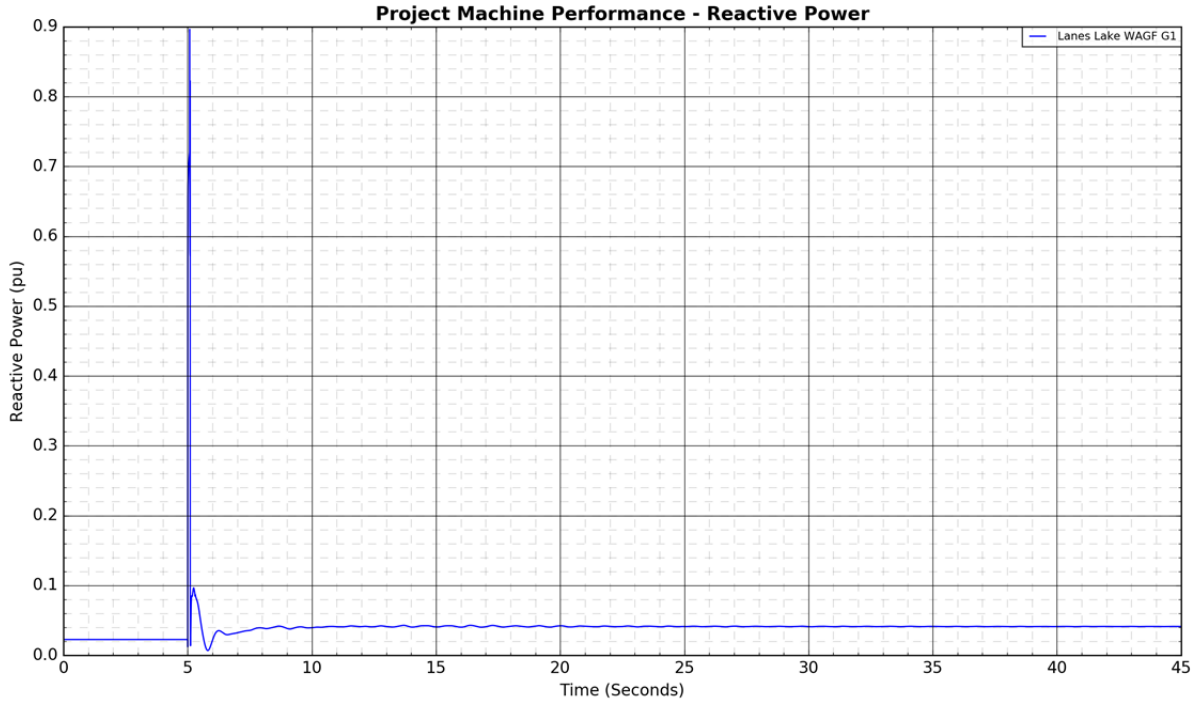
Project Machine Performance - Reactive Power
Lanes Lake WAGF G1
Reactive Power (pu)
Time (Seconds)
0.9
0.8
0.7
0.6
0.5
0.4
0.3
0.2
0.1
0.0
0
5
10
15
20
25
30
35
40
45

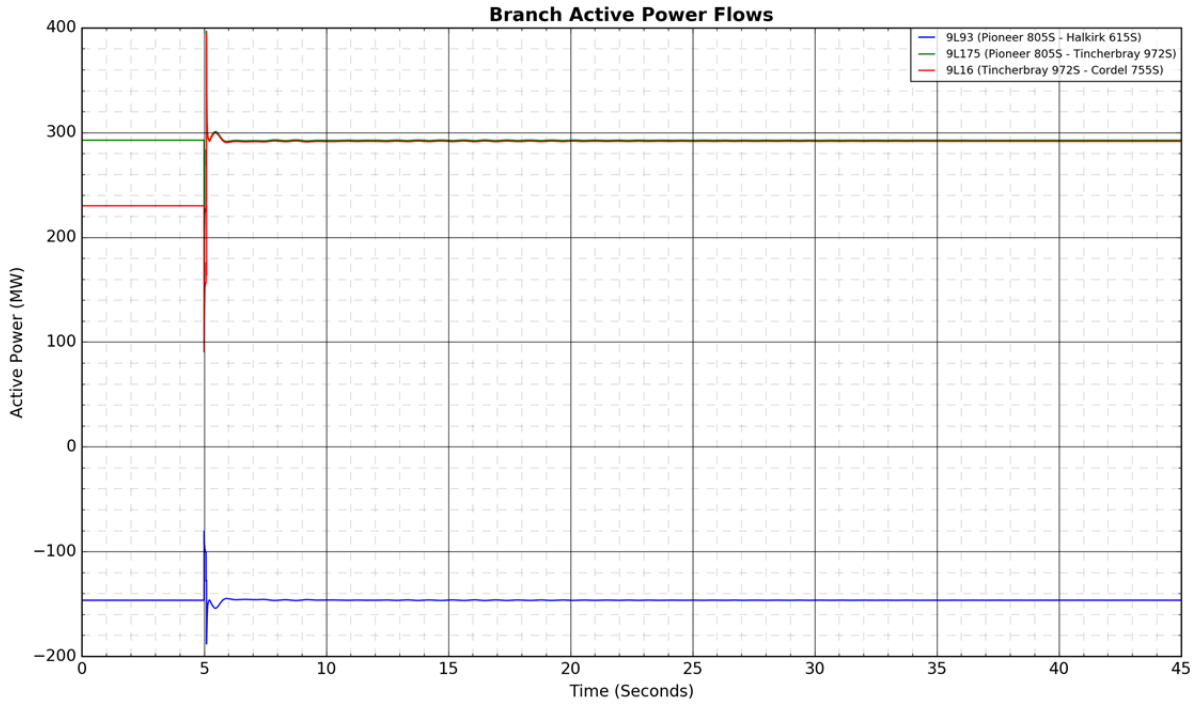
Branch Active Power Flows
9L93 (Pioneer 805S - Halkirk 615S)
9L175 (Pioneer 805S - Tincherbray 972S)
9L16 (Tincherbray 972S - Cordel 755S)
Active Power (MW)
Time (Seconds)

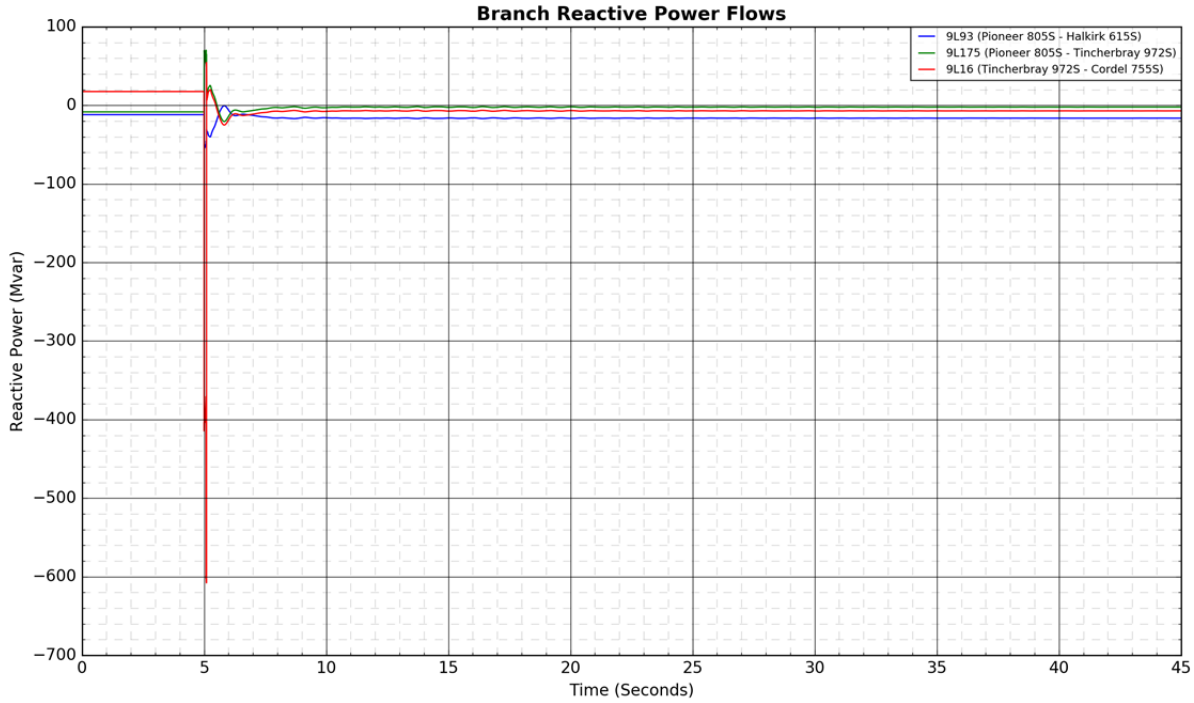
Branch Reactive Power Flows
9L93 (Pioneer 805S - Halkirk 615S)
9L175 (Pioneer 805S - Tincherbray 972S)
9L16 (Tincherbray 972S - Cordel 755S)
Reactive Power (Mvar)
Time (Seconds)

Figure A4-80: 9L59 (Anderson 801S - Tinchebray 972S): 3-phase fault at Tinchebray 972S

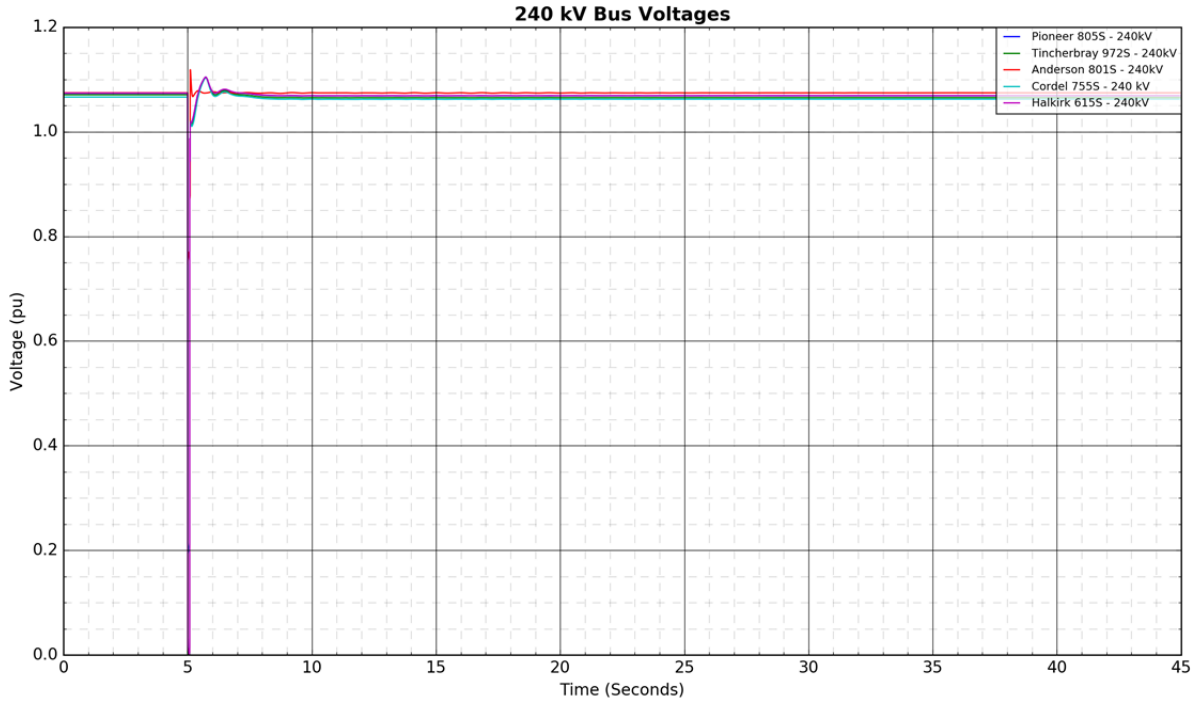

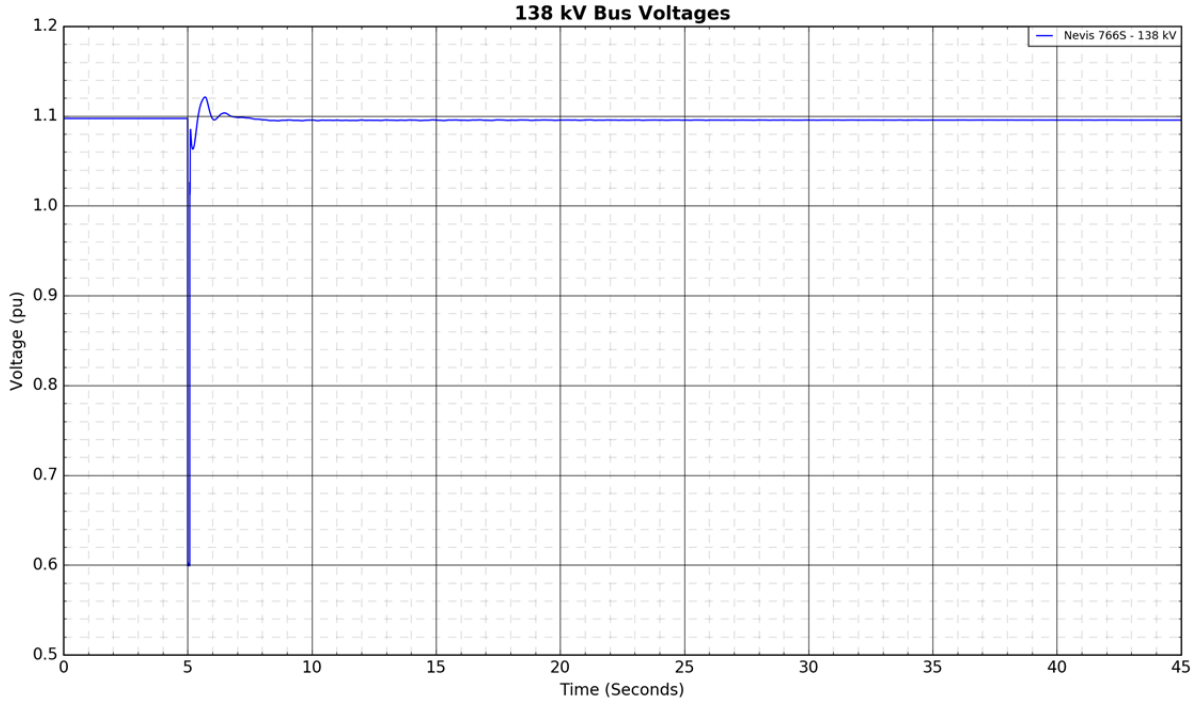

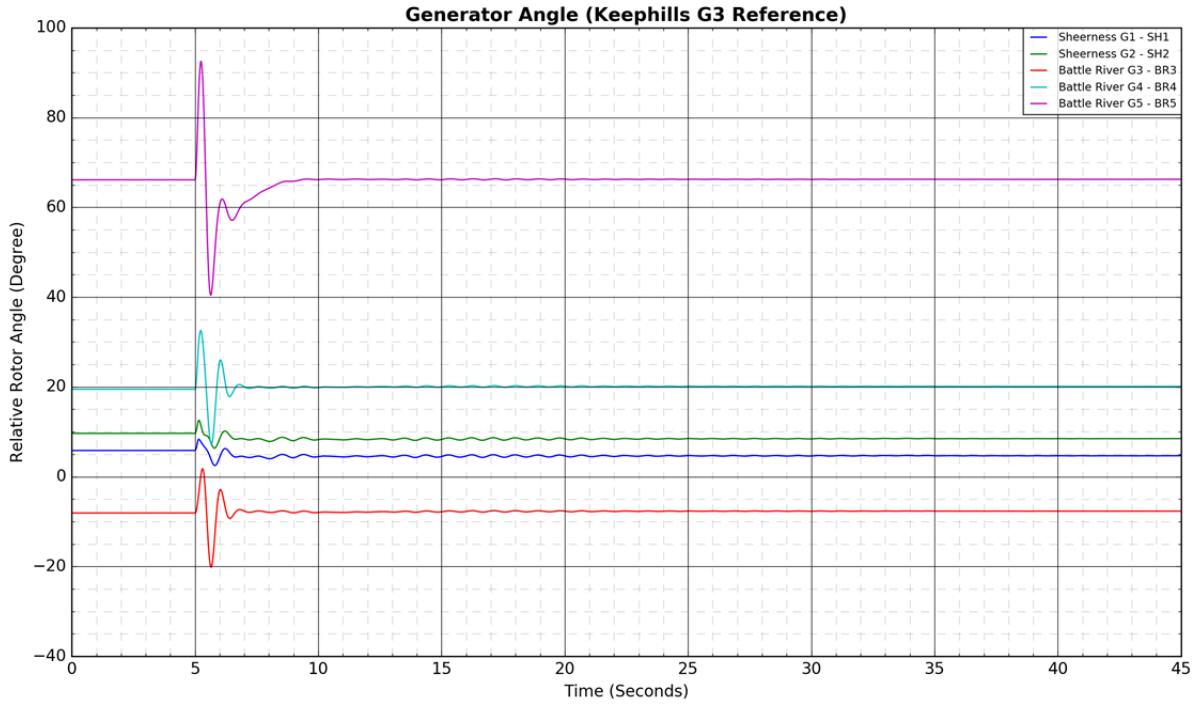
Generator Angle (Keephills G3 Reference)
Relative Rotor Angle (Degree)
Time (Seconds)
Sheerness G1 - SH1
Sheerness G2 - SH2
Battle River G3 - BR3
Battle River G4 - BR4
Battle River G5 - BR5

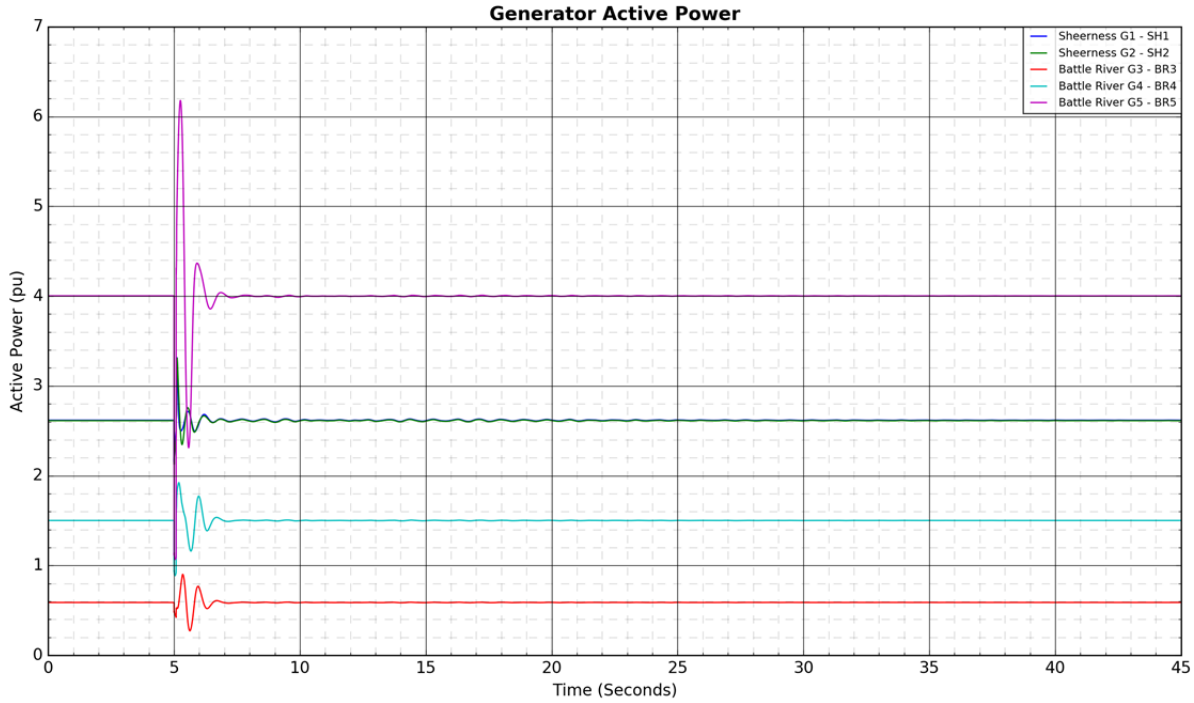
Generator Active Power
Active Power (pu)
Time (Seconds)
Sheerness G1 - SH1
Sheerness G2 - SH2
Battle River G3 - BR3
Battle River G4 - BR4
Battle River G5 - BR5

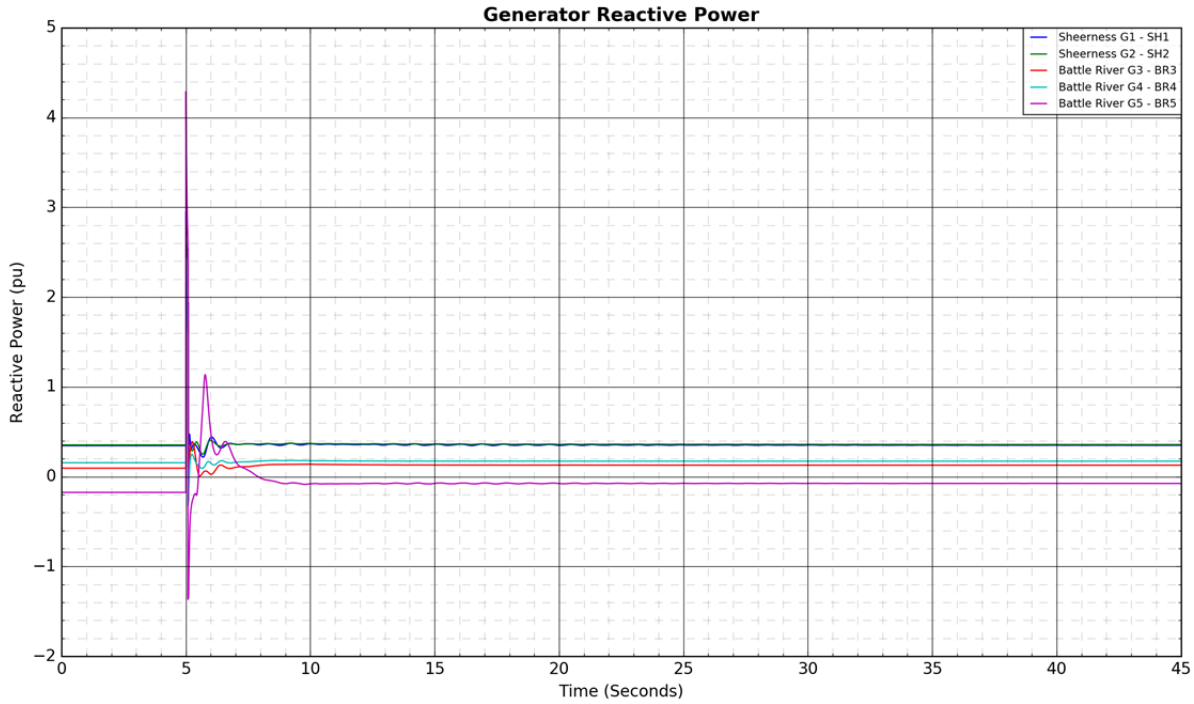
Generator Reactive Power
Sheerness G1 - SH1
Sheerness G2 - SH2
Battle River G3 - BR3
Battle River G4 - BR4
Battle River G5 - BR5
Reactive Power (pu)
Time (Seconds)

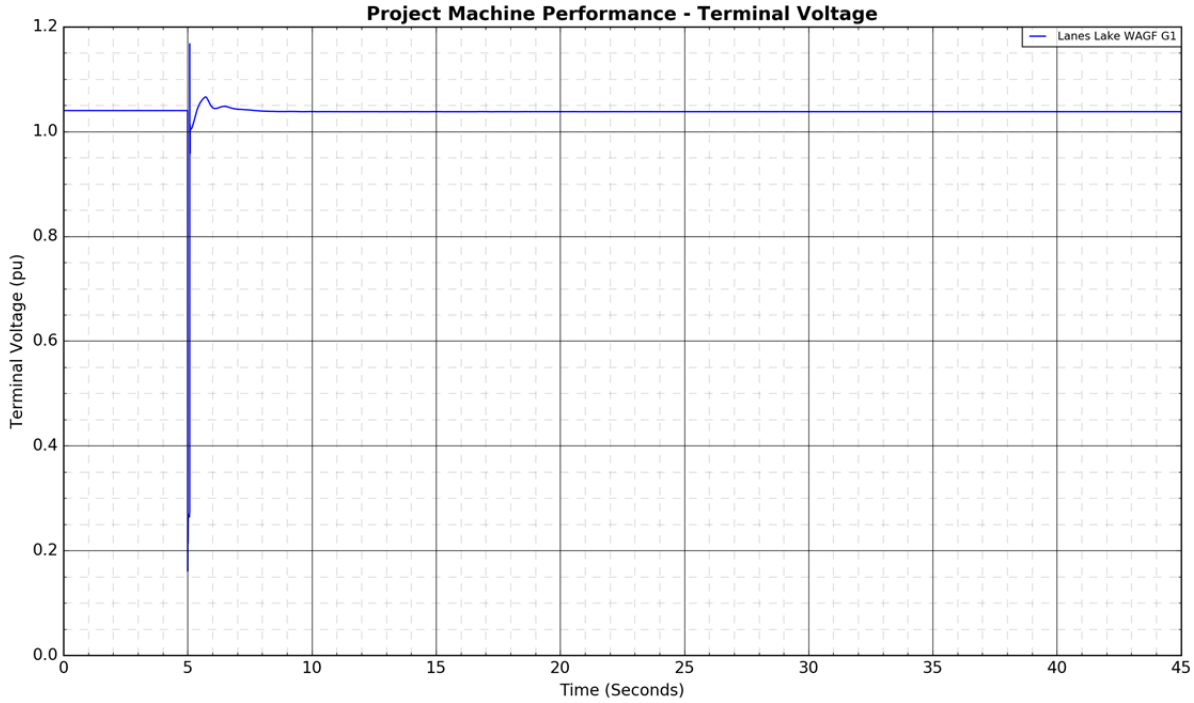
Project Machine Performance - Terminal Voltage
Lanes Lake WAGF G1
Terminal Voltage (pu)
Time (Seconds)

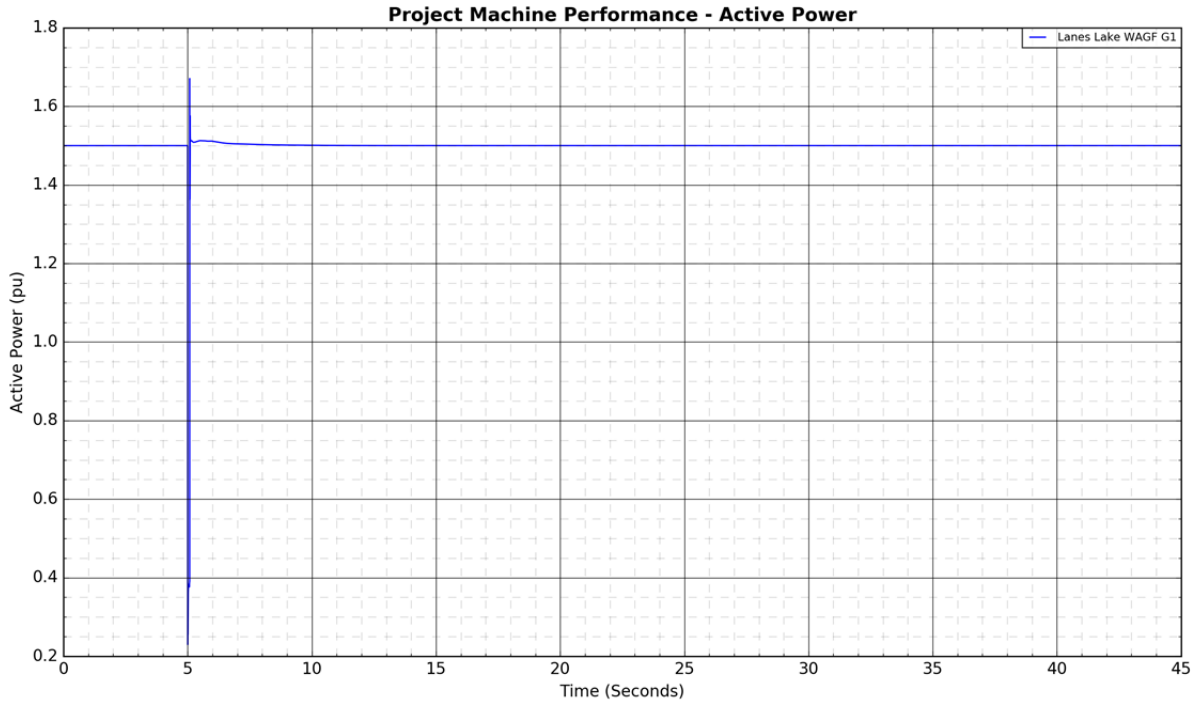
Project Machine Performance - Active Power
Lanes Lake WAGF G1
Active Power (pu)
Time (Seconds)
1.8
1.6
1.4
1.2
1.0
0.8
0.6
0.4
0.2
0
5
10
15
20
25
30
35
40
45


Project Machine Performance - Reactive Power
Lanes Lake WAGF G1
Reactive Power (pu)
Time (Seconds)
2.0
1.5
1.0
0.5
0.0
−0.5
0
5
10
15
20
25
30
35
40
45

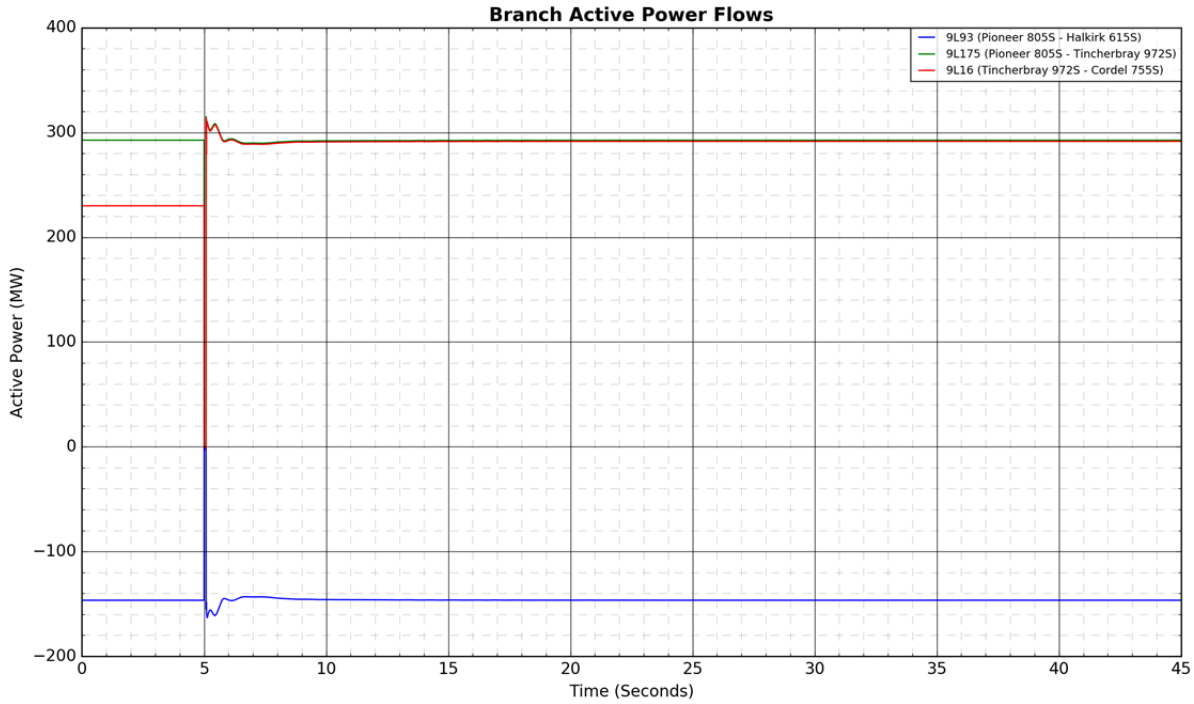
Branch Active Power Flows
9L93 (Pioneer 805S - Halkirk 615S)
9L175 (Pioneer 805S - Tincherbray 972S)
9L16 (Tincherbray 972S - Cordel 755S)
Active Power (MW)
Time (Seconds)

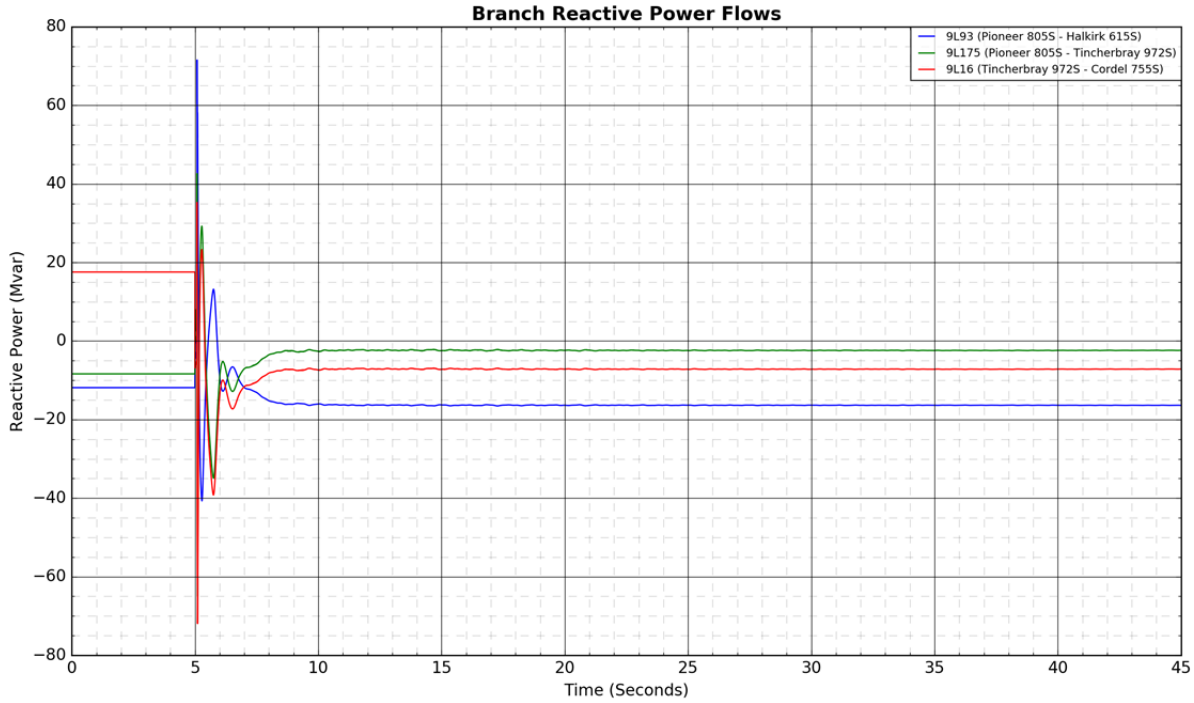
Branch Reactive Power Flows
9L93 (Pioneer 805S - Halkirk 615S)
9L175 (Pioneer 805S - Tincherbray 972S)
9L16 (Tincherbray 972S - Cordel 755S)
Reactive Power (Mvar)
Time (Seconds)

Figure A4-81: 9L966 (Pemukan 932S - Hansman Lake 650S): 3-phase fault at Pemukan 932S

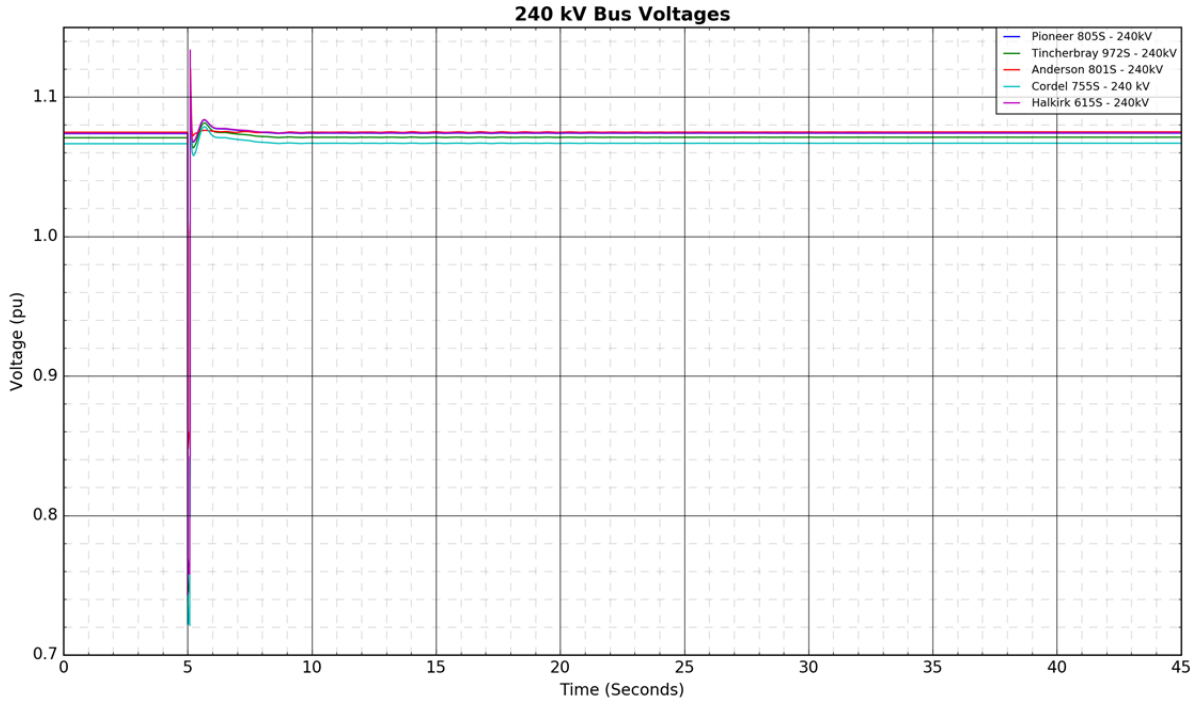

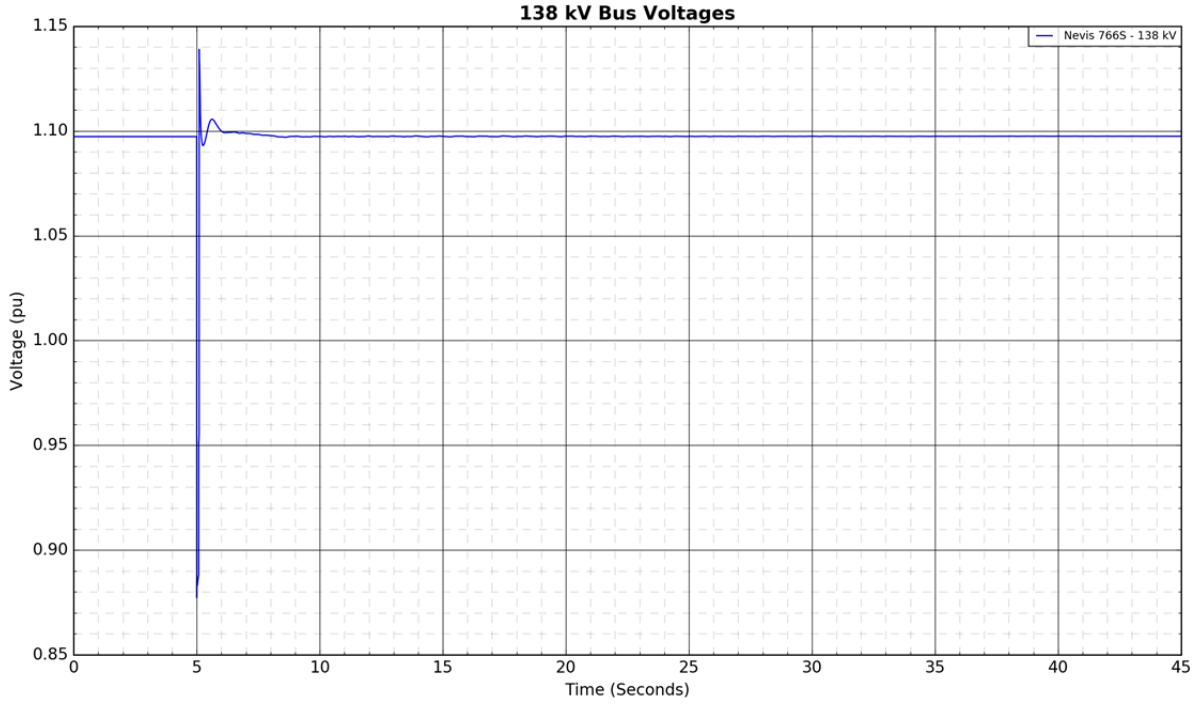

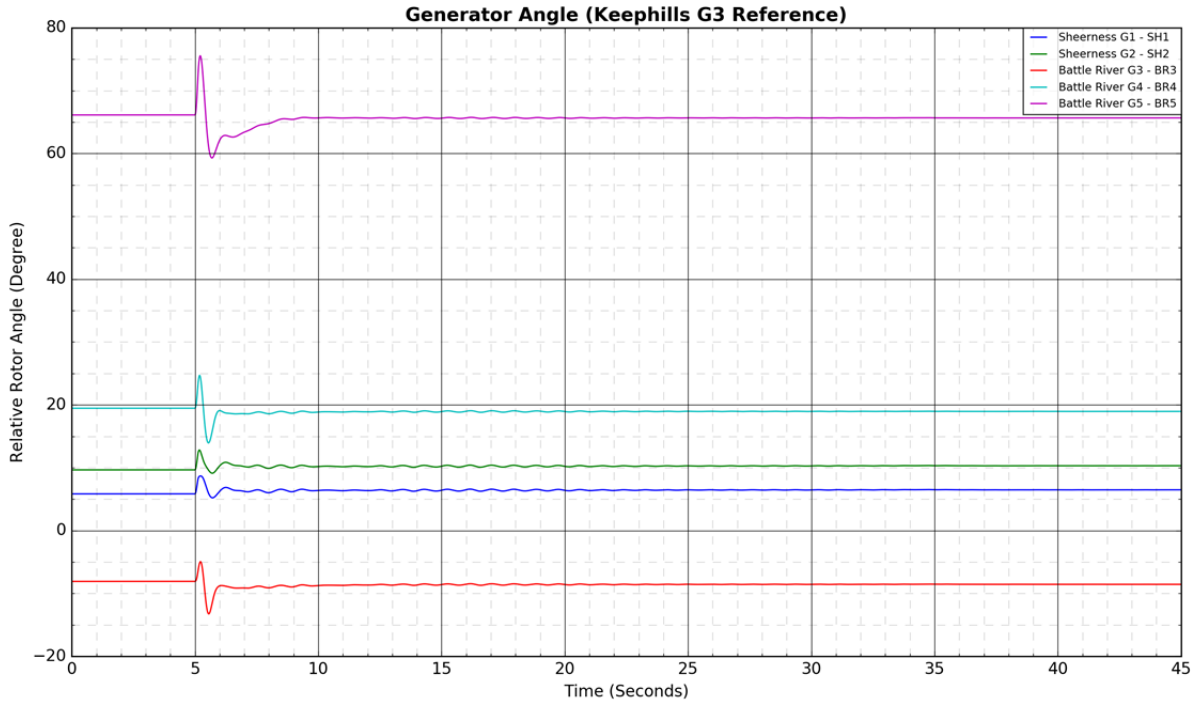
Generator Angle (Keephills G3 Reference)
Relative Rotor Angle (Degree)
Time (Seconds)
Sheerness G1 - SH1
Sheerness G2 - SH2
Battle River G3 - BR3
Battle River G4 - BR4
Battle River G5 - BR5

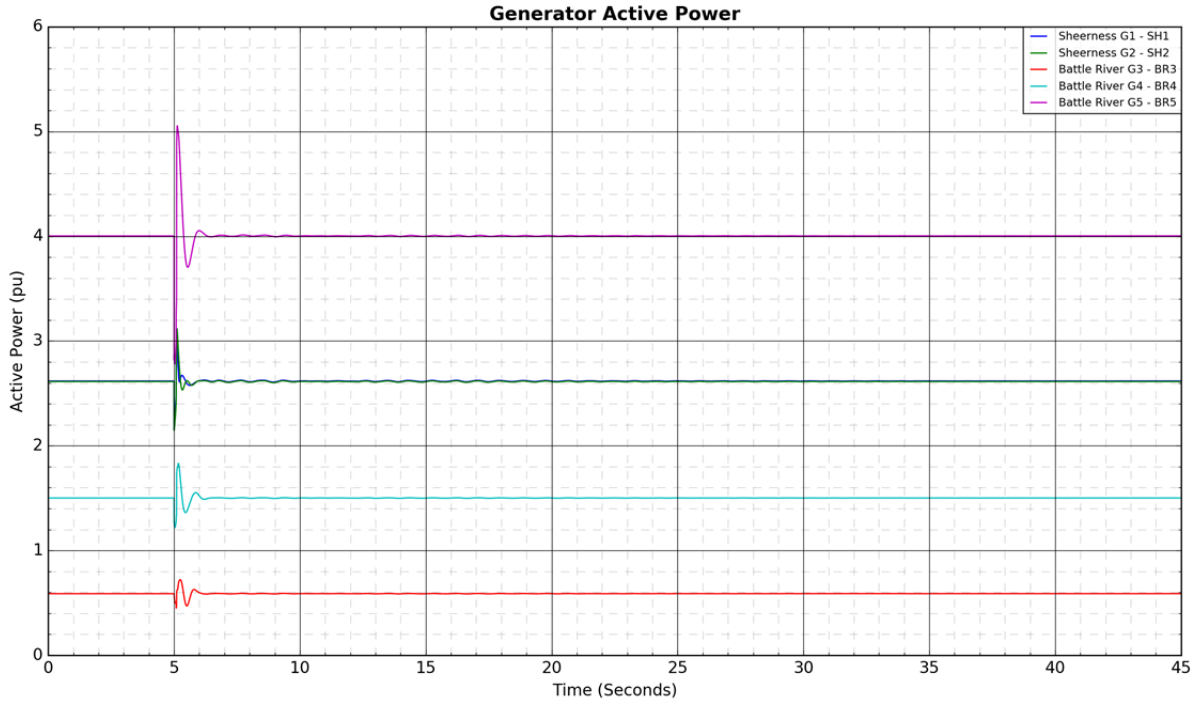
Generator Active Power
Active Power (pu)
Time (Seconds)
Sheerness G1 - SH1
Sheerness G2 - SH2
Battle River G3 - BR3
Battle River G4 - BR4
Battle River G5 - BR5

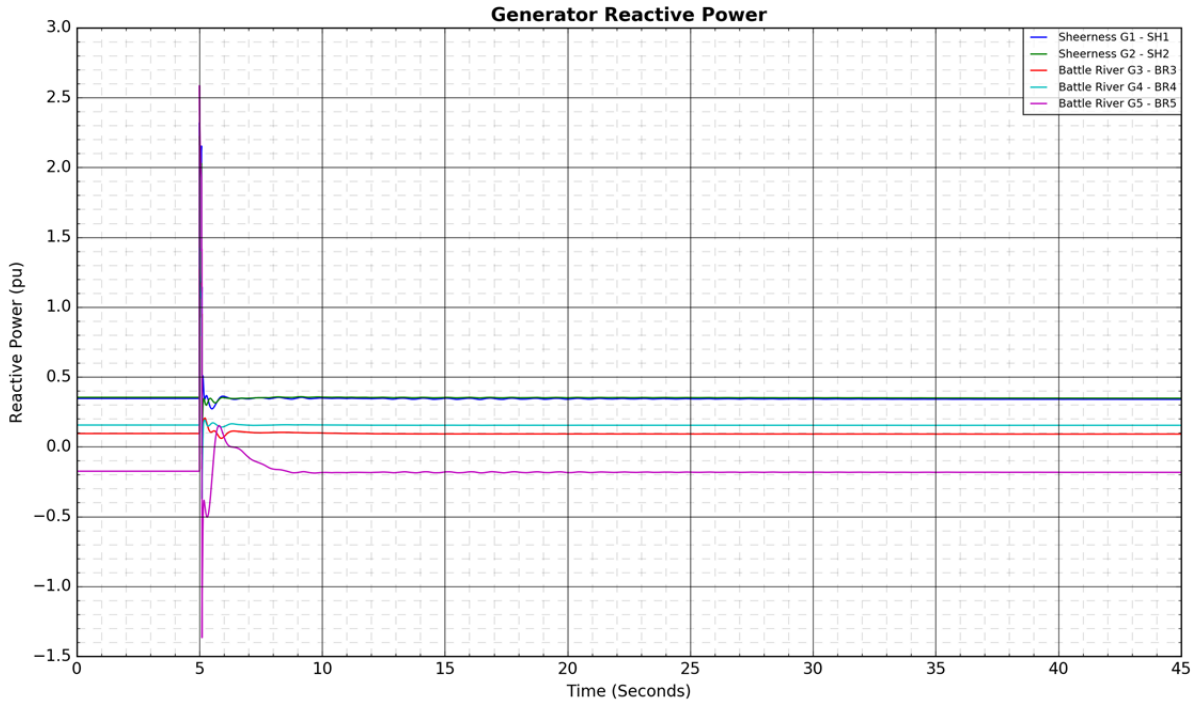
Generator Reactive Power
Sheerness G1 - SH1
Sheerness G2 - SH2
Battle River G3 - BR3
Battle River G4 - BR4
Battle River G5 - BR5
Reactive Power (pu)
Time (Seconds)

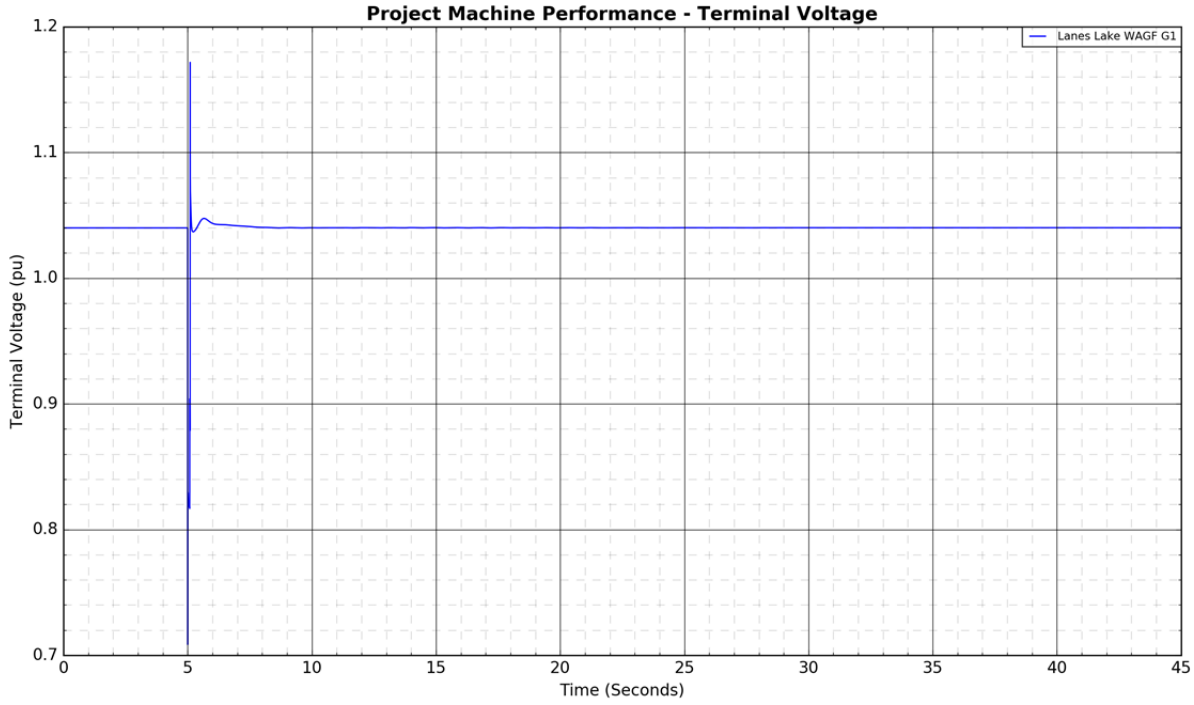
Project Machine Performance - Terminal Voltage
Lanes Lake WAGF G1
Terminal Voltage (pu)
Time (Seconds)


Project Machine Performance - Active Power
Lanes Lake WAGF G1
Active Power (pu)
Time (Seconds)
2.2
2.0
1.8
1.6
1.4
1.2
1.0
0
5
10
15
20
25
30
35
40
45

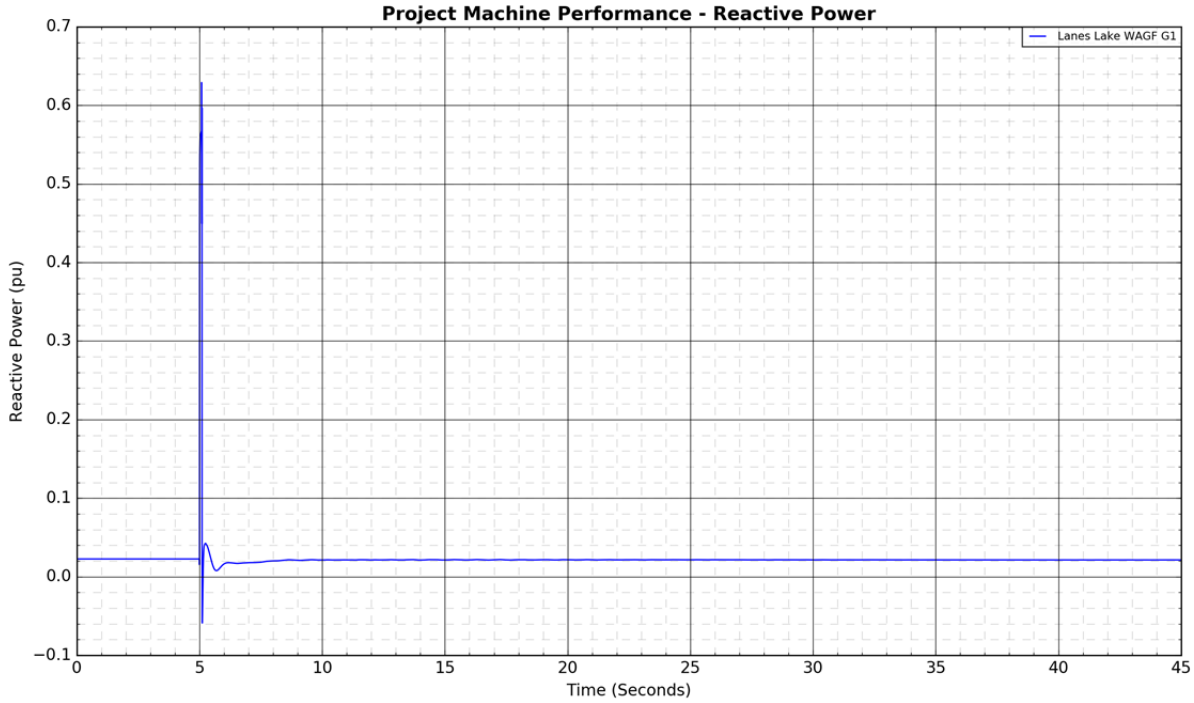
Project Machine Performance - Reactive Power
Lanes Lake WAGF G1
Reactive Power (pu)
Time (Seconds)
0.7
0.6
0.5
0.4
0.3
0.2
0.1
0.0
−0.1
0
5
10
15
20
25
30
35
40
45


Branch Active Power Flows
9L93 (Pioneer 805S - Halkirk 615S)
9L175 (Pioneer 805S - Tincherbray 972S)
9L16 (Tincherbray 972S - Cordel 755S)
9L59 (Anderson 801S - Tinchebray 972S)
Active Power (MW)
Time (Seconds)

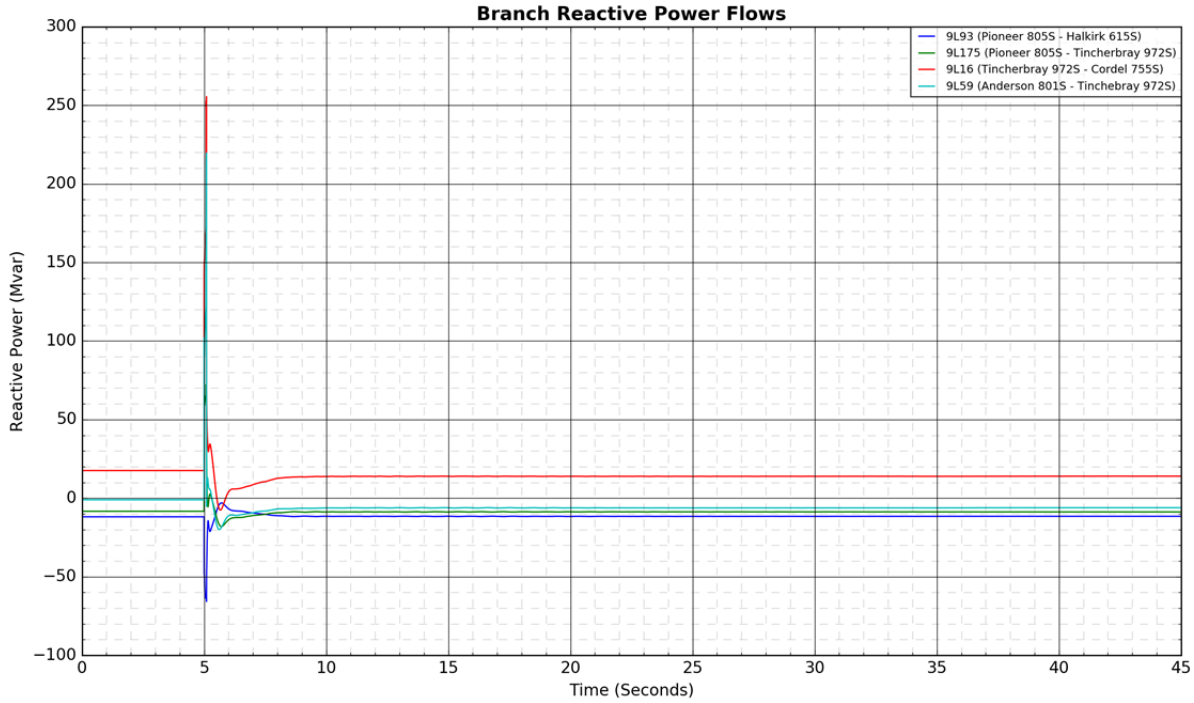
Branch Reactive Power Flows
9L93 (Pioneer 805S - Halkirk 615S)
9L175 (Pioneer 805S - Tincherbray 972S)
9L16 (Tincherbray 972S - Cordel 755S)
9L59 (Anderson 801S - Tinchebray 972S)
Reactive Power (Mvar)
Time (Seconds)

Figure A4-82: 9L966 (Pemukan 932S - Hansman Lake 650S): 3-phase fault at Hansman Lake 650S

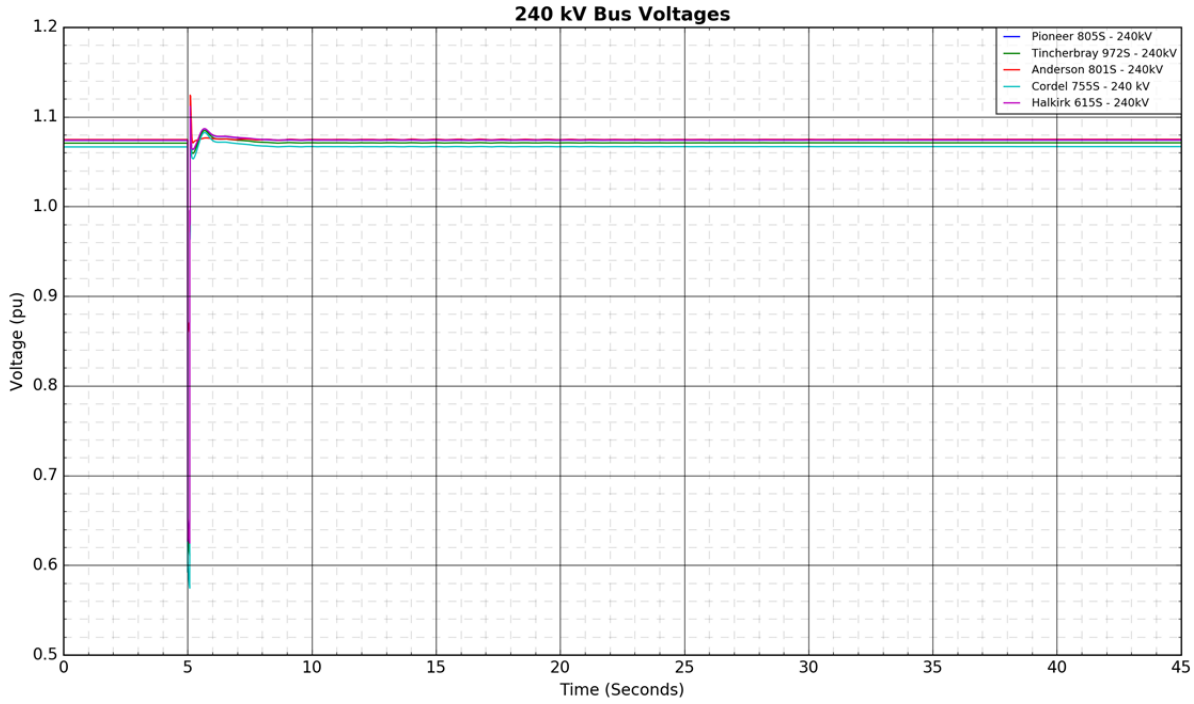

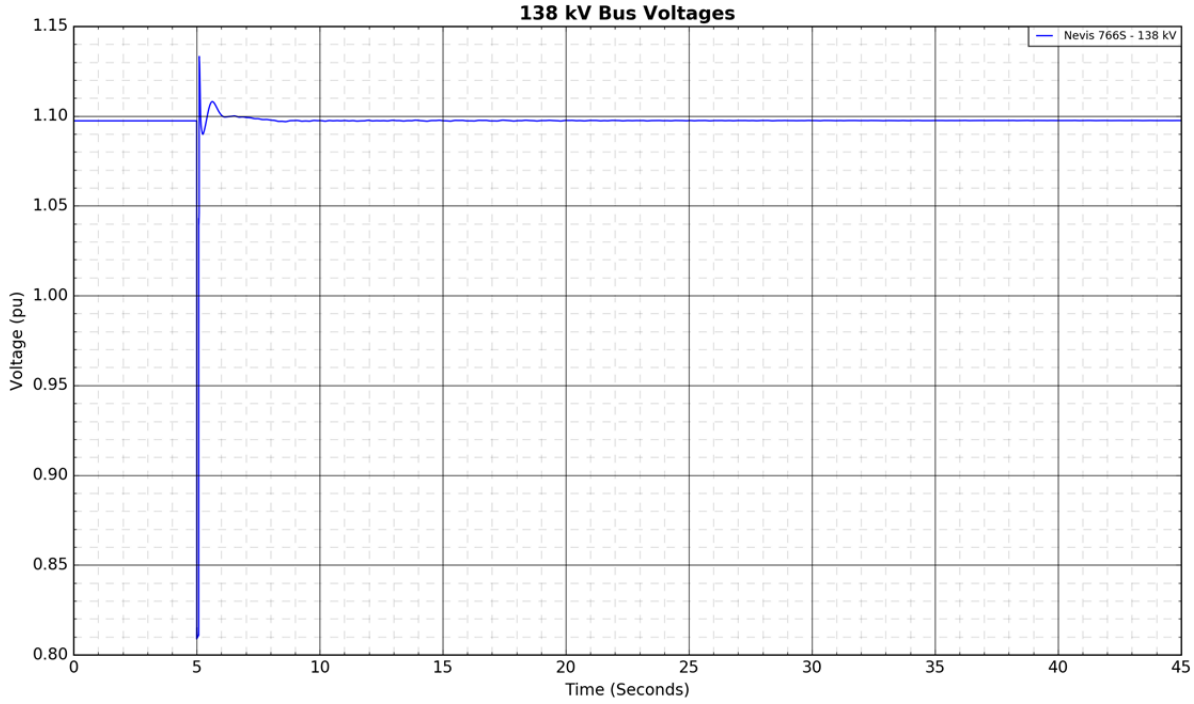

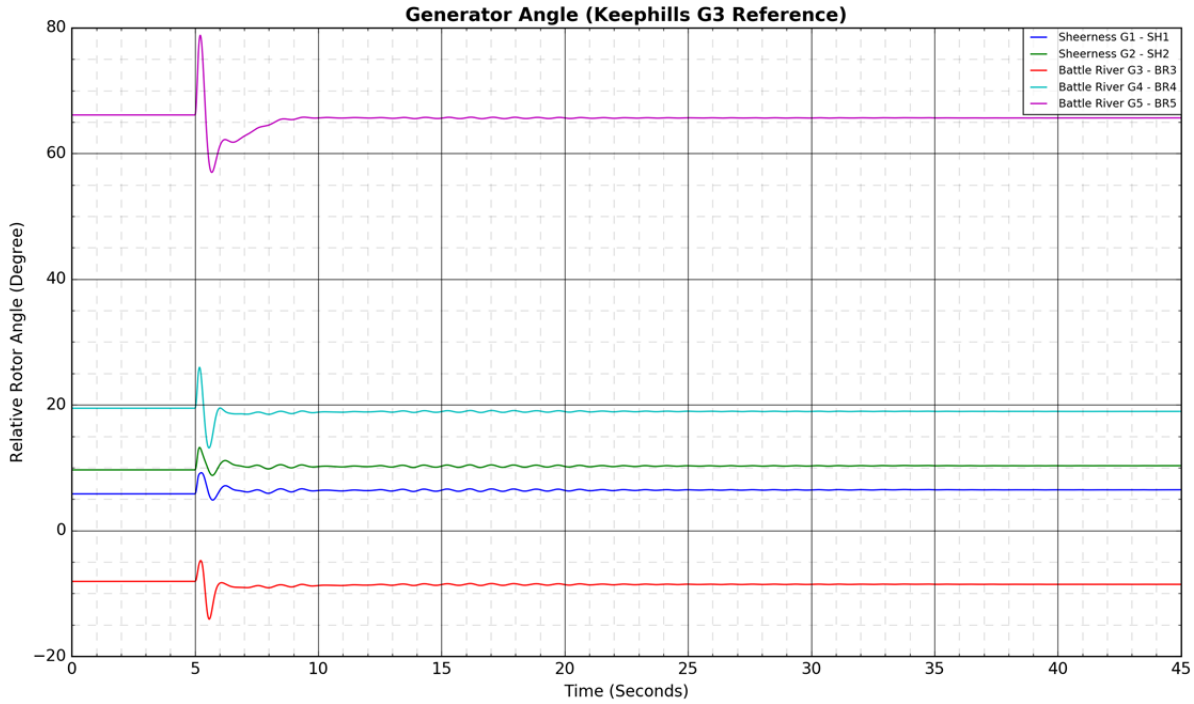
Generator Angle (Keephills G3 Reference)
Relative Rotor Angle (Degree)
Time (Seconds)
Sheerness G1 - SH1
Sheerness G2 - SH2
Battle River G3 - BR3
Battle River G4 - BR4
Battle River G5 - BR5

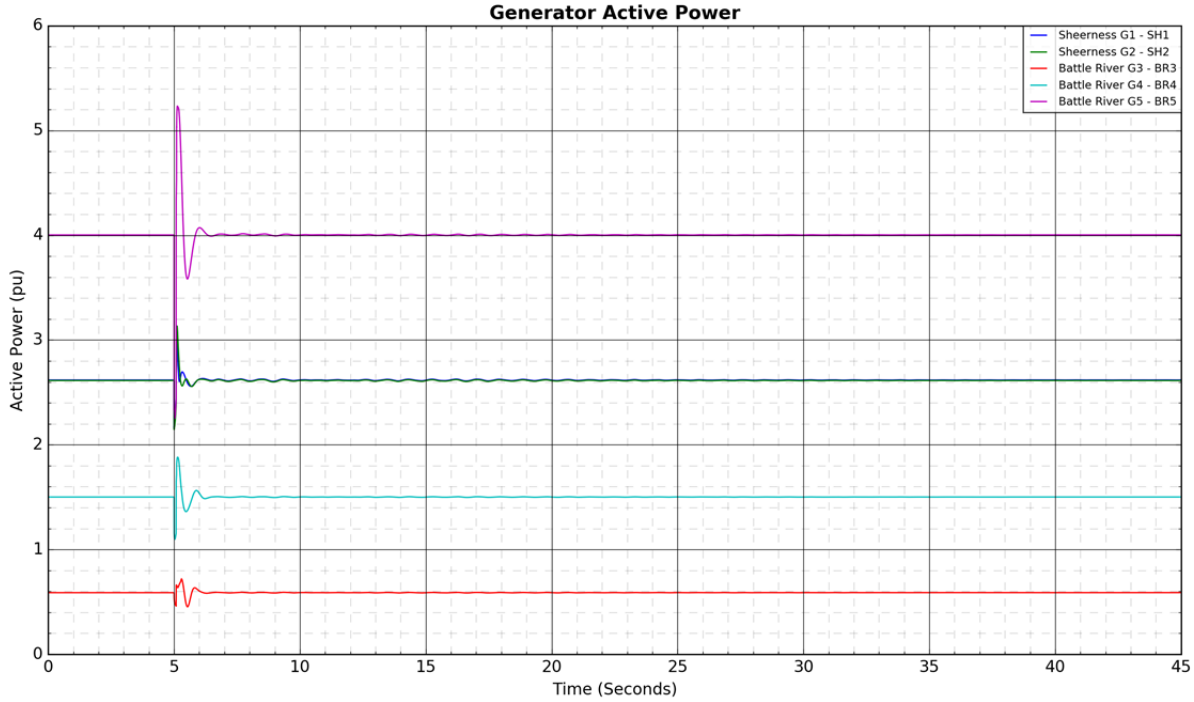
Generator Active Power
Active Power (pu)
Time (Seconds)
Sheerness G1 - SH1
Sheerness G2 - SH2
Battle River G3 - BR3
Battle River G4 - BR4
Battle River G5 - BR5

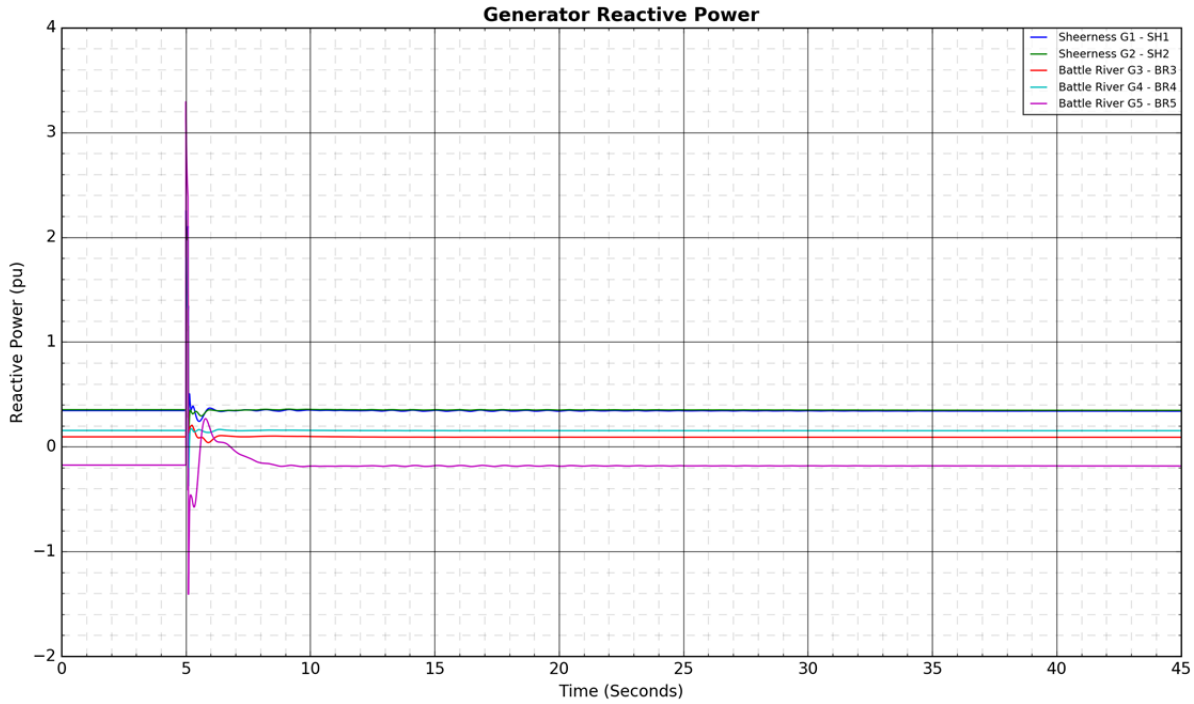
Generator Reactive Power
Sheerness G1 - SH1
Sheerness G2 - SH2
Battle River G3 - BR3
Battle River G4 - BR4
Battle River G5 - BR5
Reactive Power (pu)
Time (Seconds)

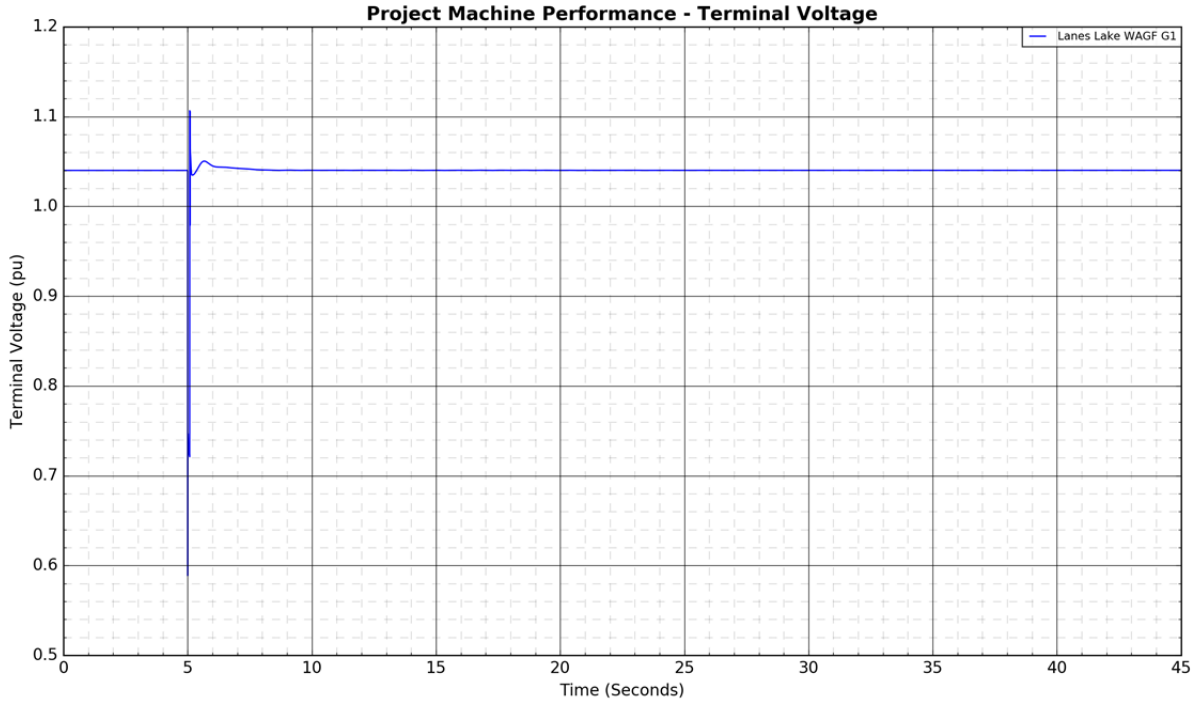
Project Machine Performance - Terminal Voltage
Lanes Lake WAGF G1
Terminal Voltage (pu)
Time (Seconds)


Project Machine Performance - Active Power
Lanes Lake WAGF G1
Active Power (pu)
Time (Seconds)
2.2
2.0
1.8
1.6
1.4
1.2
1.0
0.8
0
5
10
15
20
25
30
35
40
45

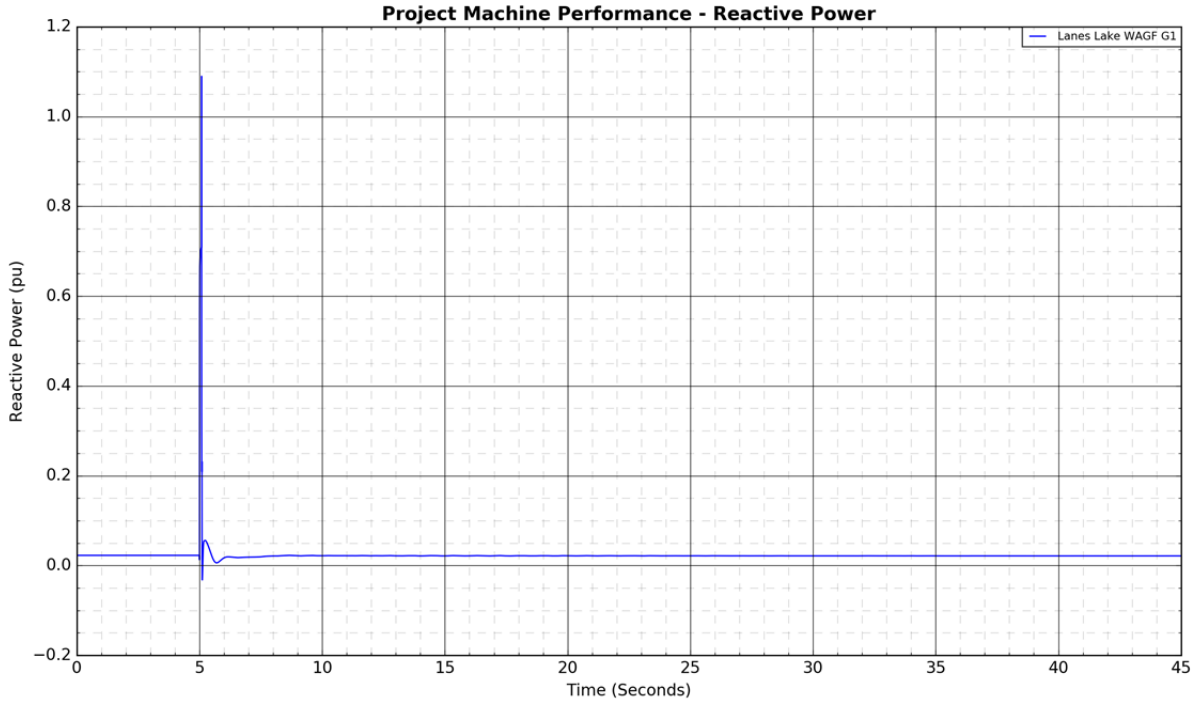
Project Machine Performance - Reactive Power
Lanes Lake WAGF G1
Reactive Power (pu)
Time (Seconds)
1.2
1.0
0.8
0.6
0.4
0.2
0.0
−0.2
0
5
10
15
20
25
30
35
40
45


Branch Active Power Flows
9L93 (Pioneer 805S - Halkirk 615S)
9L175 (Pioneer 805S - Tincherbray 972S)
9L16 (Tincherbray 972S - Cordel 755S)
9L59 (Anderson 801S - Tinchebray 972S)
Active Power (MW)
Time (Seconds)

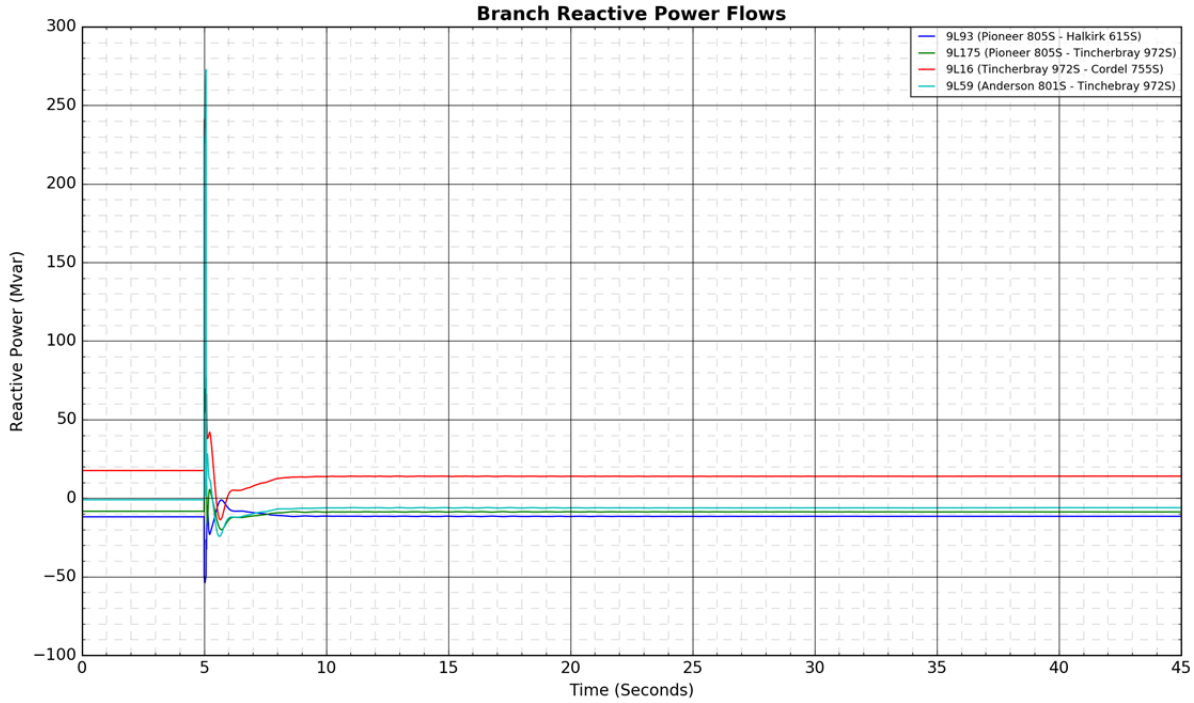
Branch Reactive Power Flows
9L93 (Pioneer 805S - Halkirk 615S)
9L175 (Pioneer 805S - Tincherbray 972S)
9L16 (Tincherbray 972S - Cordel 755S)
9L59 (Anderson 801S - Tinchebray 972S)
Reactive Power (Mvar)
Time (Seconds)

Figure A4-83: 912L\9L912 (Nevis 766S - Red Deer 63S): 3-phase fault at Nevis 766S

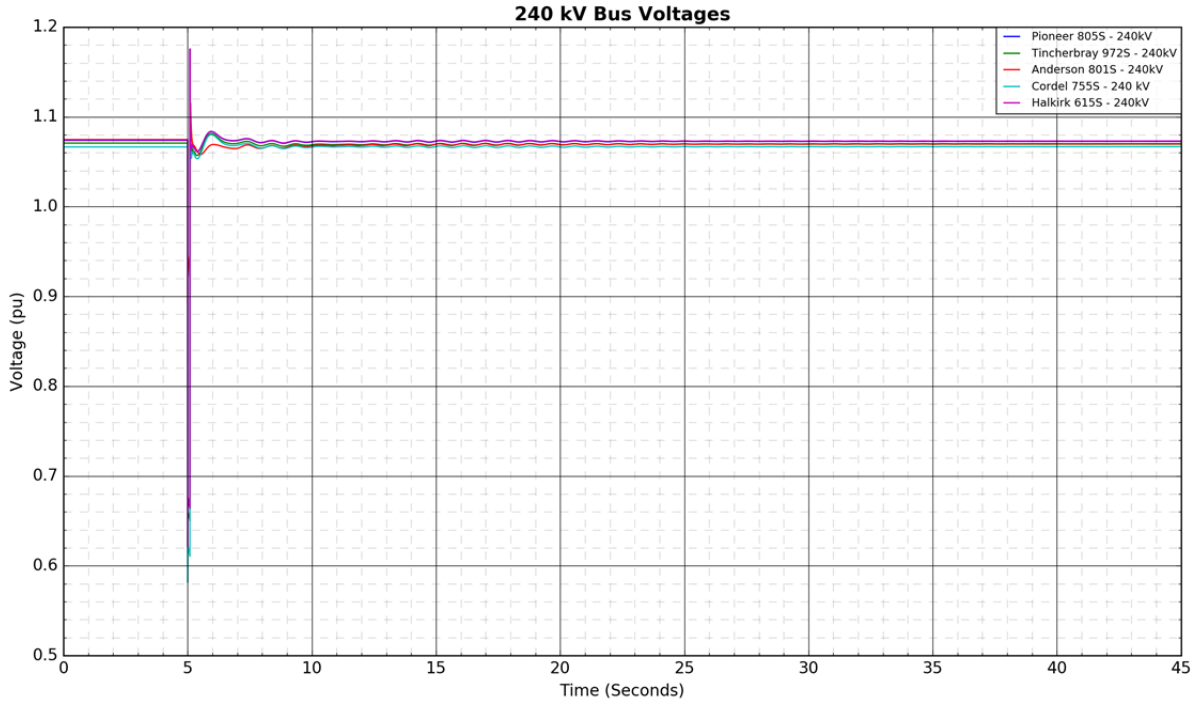

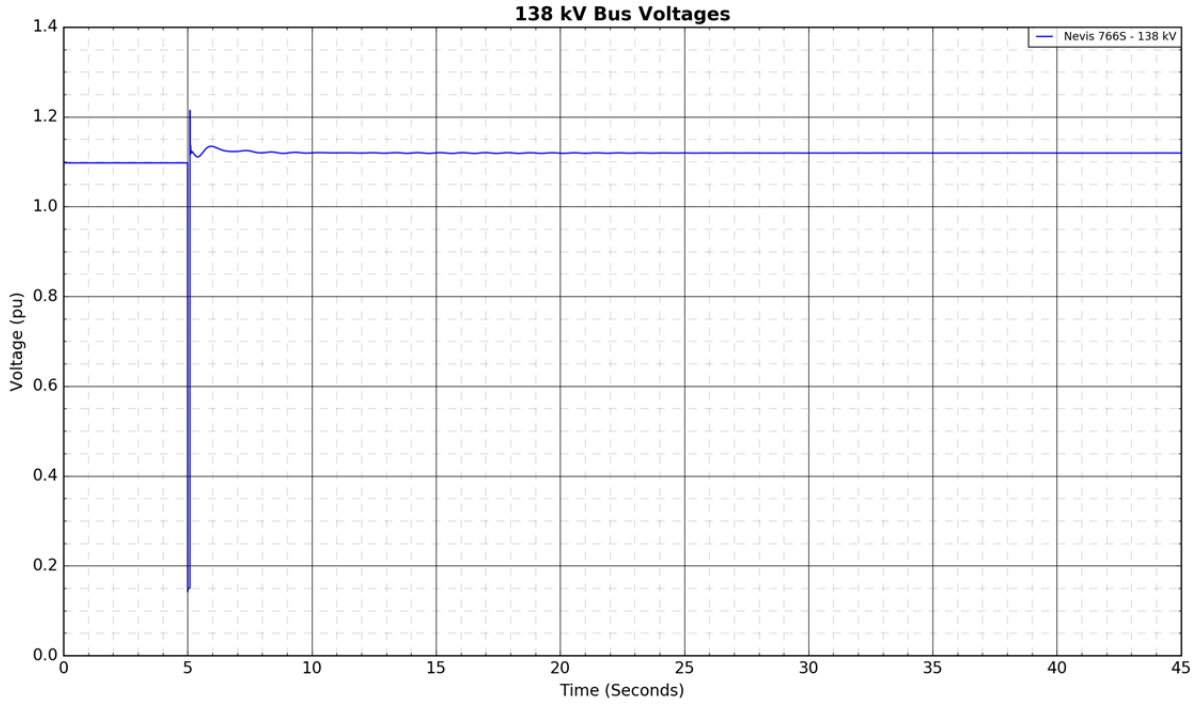

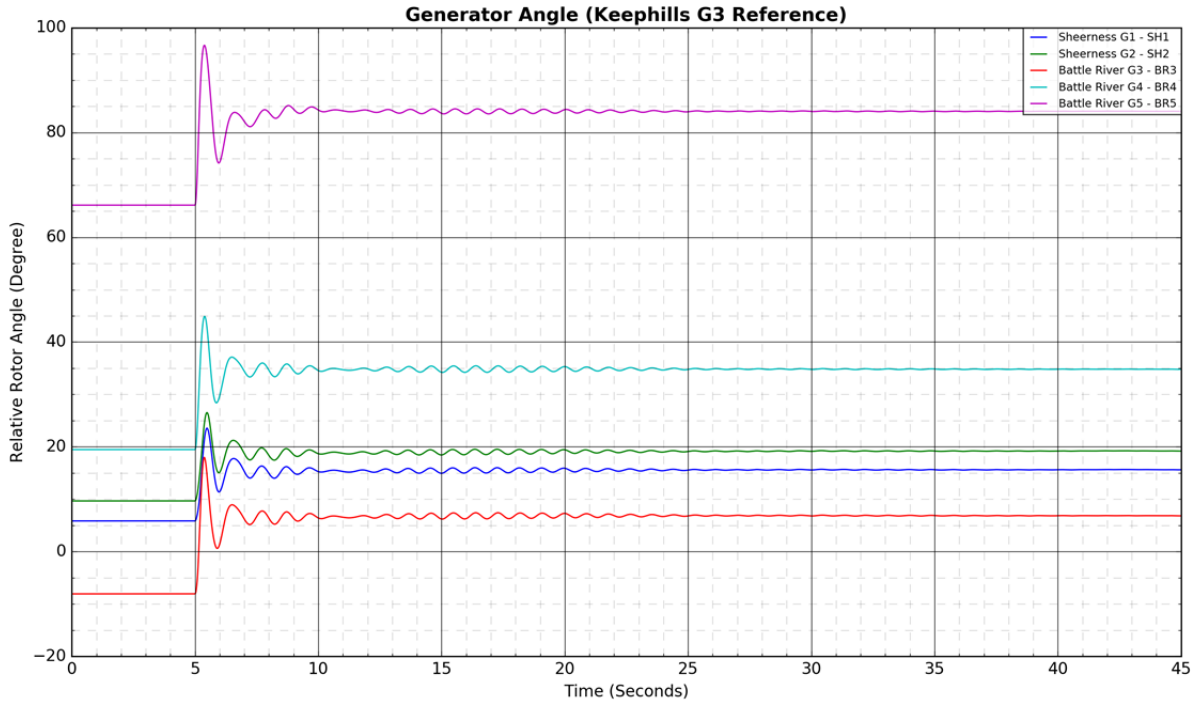
Generator Angle (Keephills G3 Reference)
Relative Rotor Angle (Degree)
Time (Seconds)
Sheerness G1 - SH1
Sheerness G2 - SH2
Battle River G3 - BR3
Battle River G4 - BR4
Battle River G5 - BR5

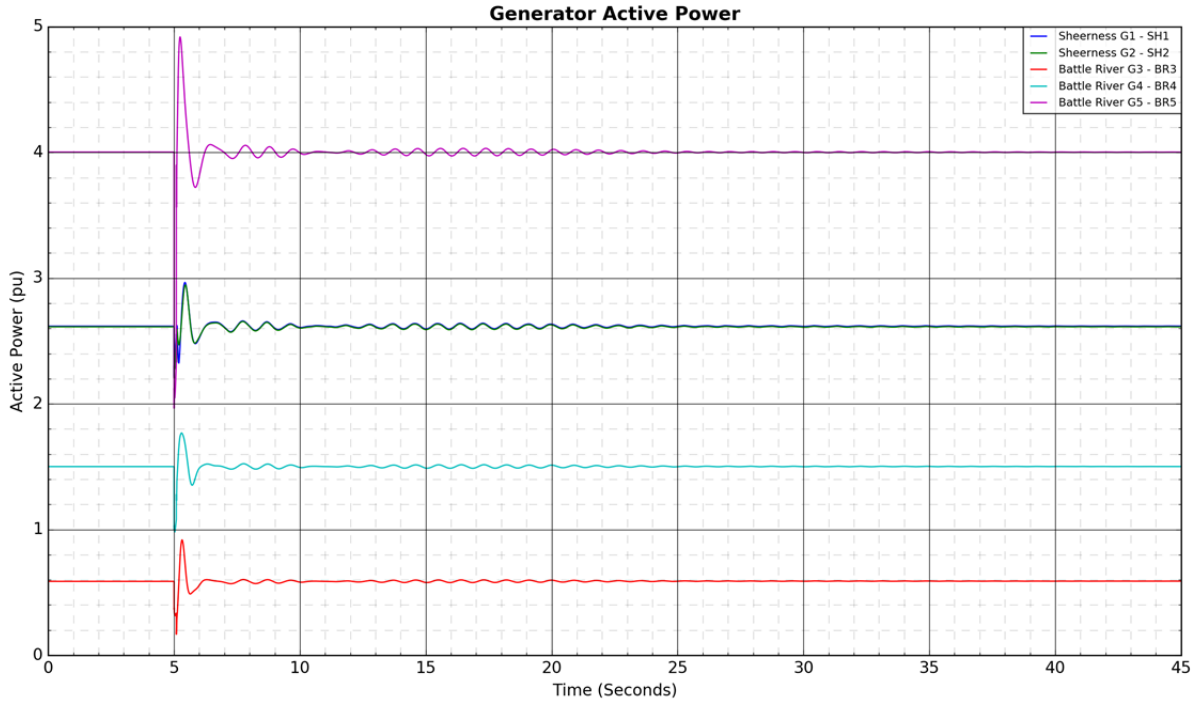
Generator Active Power
Active Power (pu)
Time (Seconds)
Sheerness G1 - SH1
Sheerness G2 - SH2
Battle River G3 - BR3
Battle River G4 - BR4
Battle River G5 - BR5

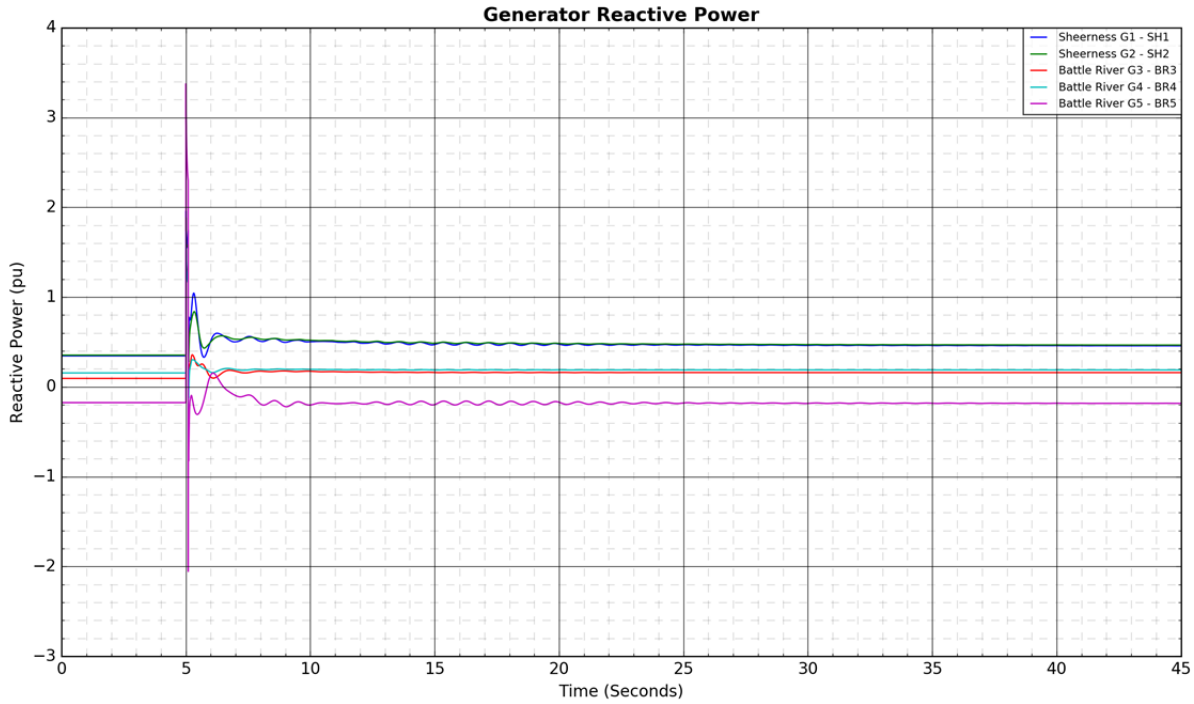
Generator Reactive Power
Sheerness G1 - SH1
Sheerness G2 - SH2
Battle River G3 - BR3
Battle River G4 - BR4
Battle River G5 - BR5
Reactive Power (pu)
Time (Seconds)

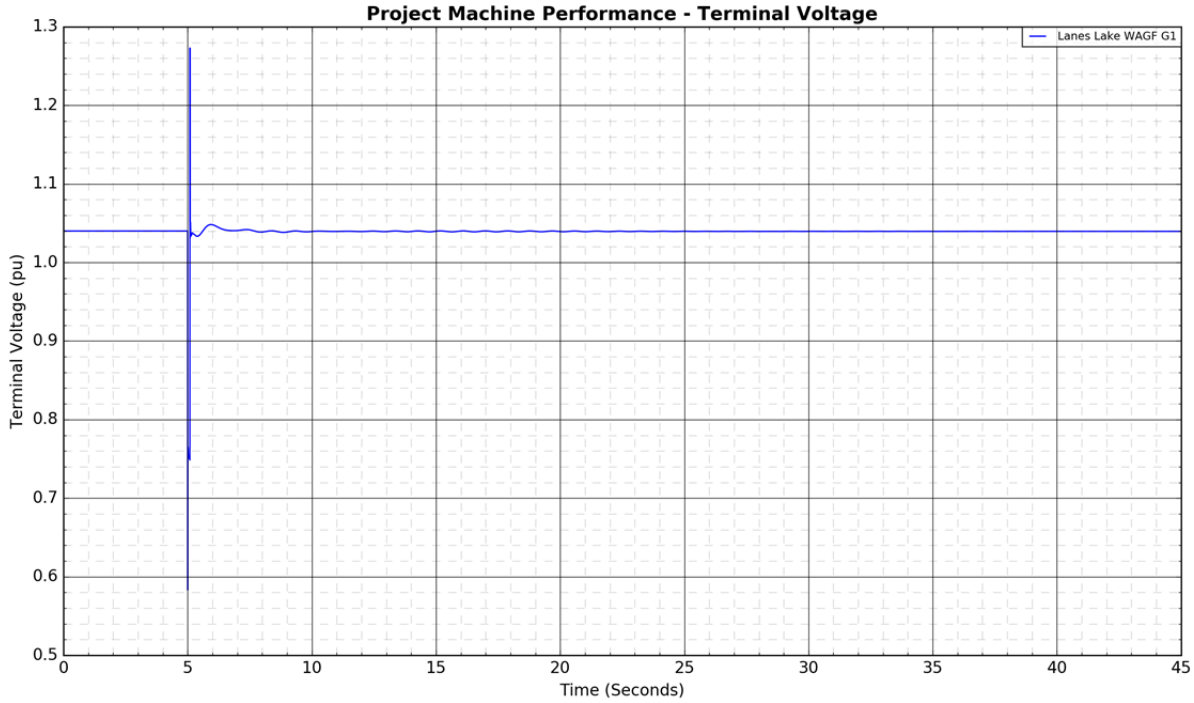
Project Machine Performance - Terminal Voltage
Lanes Lake WAGF G1
Terminal Voltage (pu)
Time (Seconds)


Project Machine Performance - Active Power
Lanes Lake WAGF G1
Active Power (pu)
Time (Seconds)
2.6
2.4
2.2
2.0
1.8
1.6
1.4
1.2
1.0
0.8
0
5
10
15
20
25
30
35
40
45

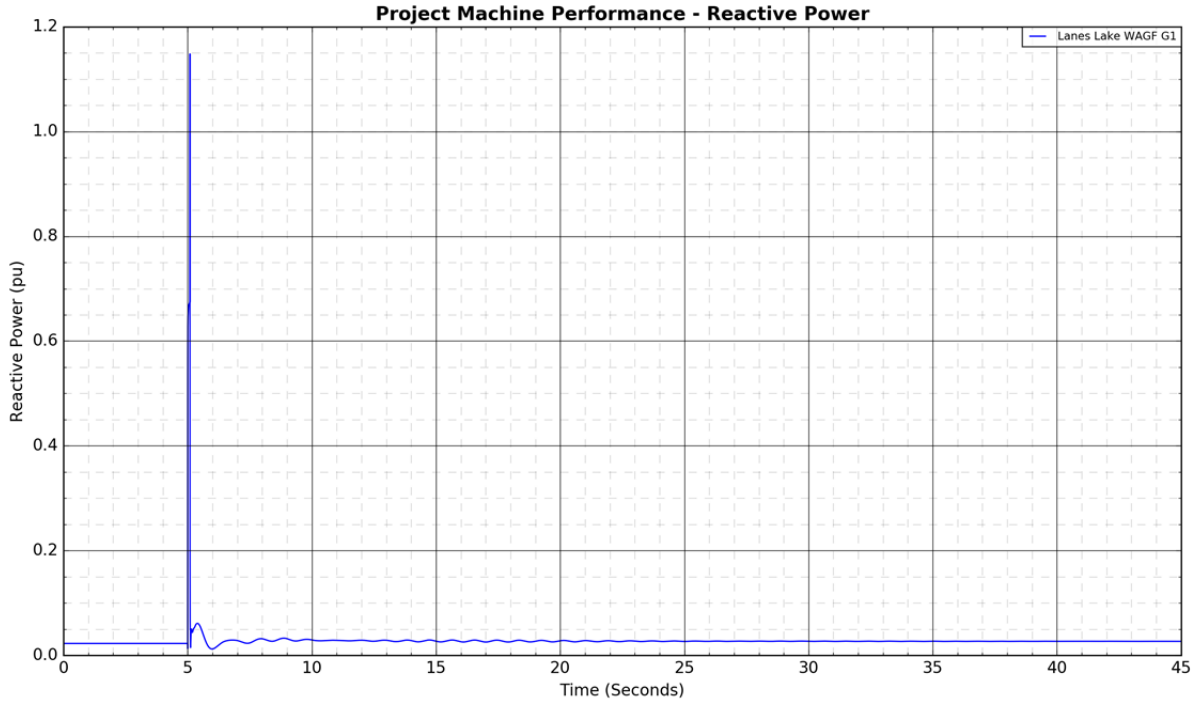
Project Machine Performance - Reactive Power
Lanes Lake WAGF G1
Reactive Power (pu)
Time (Seconds)
1.2
1.0
0.8
0.6
0.4
0.2
0.0
0
5
10
15
20
25
30
35
40
45

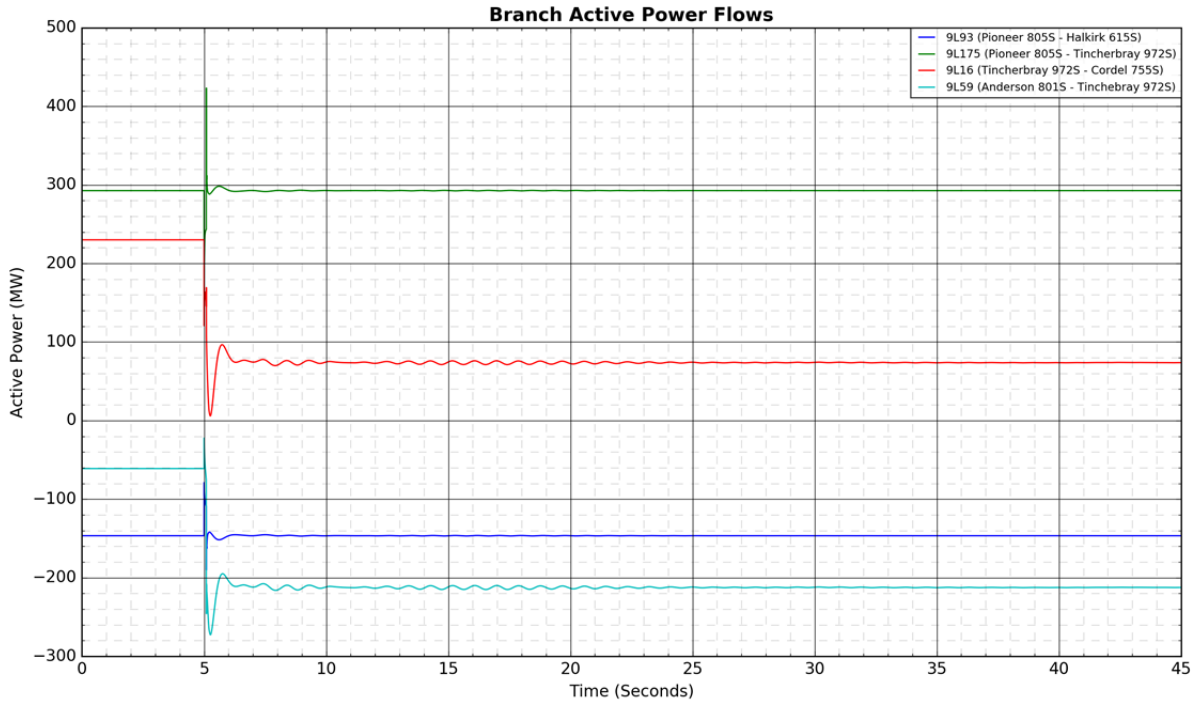
Branch Active Power Flows
9L93 (Pioneer 805S - Halkirk 615S)
9L175 (Pioneer 805S - Tincherbray 972S)
9L16 (Tincherbray 972S - Cordel 755S)
9L59 (Anderson 801S - Tinchebray 972S)
Active Power (MW)
Time (Seconds)

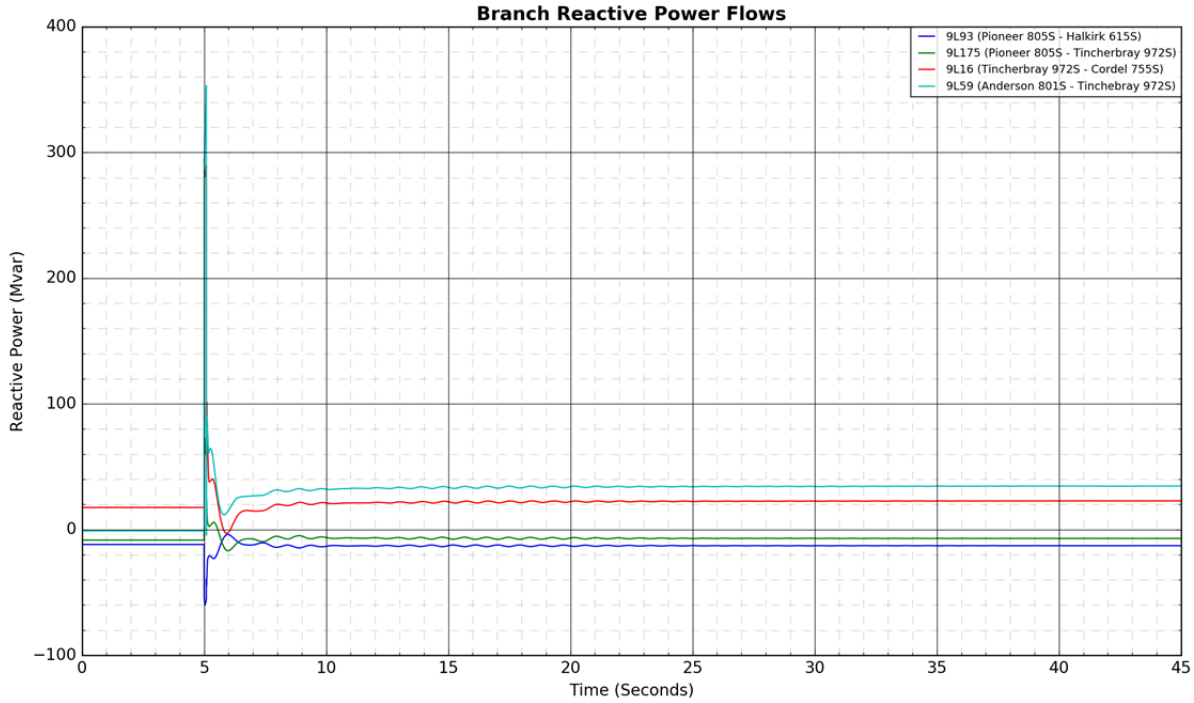
Branch Reactive Power Flows
9L93 (Pioneer 805S - Halkirk 615S)
9L175 (Pioneer 805S - Tincherbray 972S)
9L16 (Tincherbray 972S - Cordel 755S)
9L59 (Anderson 801S - Tinchebray 972S)
Reactive Power (Mvar)
Time (Seconds)

Figure A4-84: 912L\9L912 (Nevis 766S - Red Deer 63S): 3-phase fault at Red Deer 63S

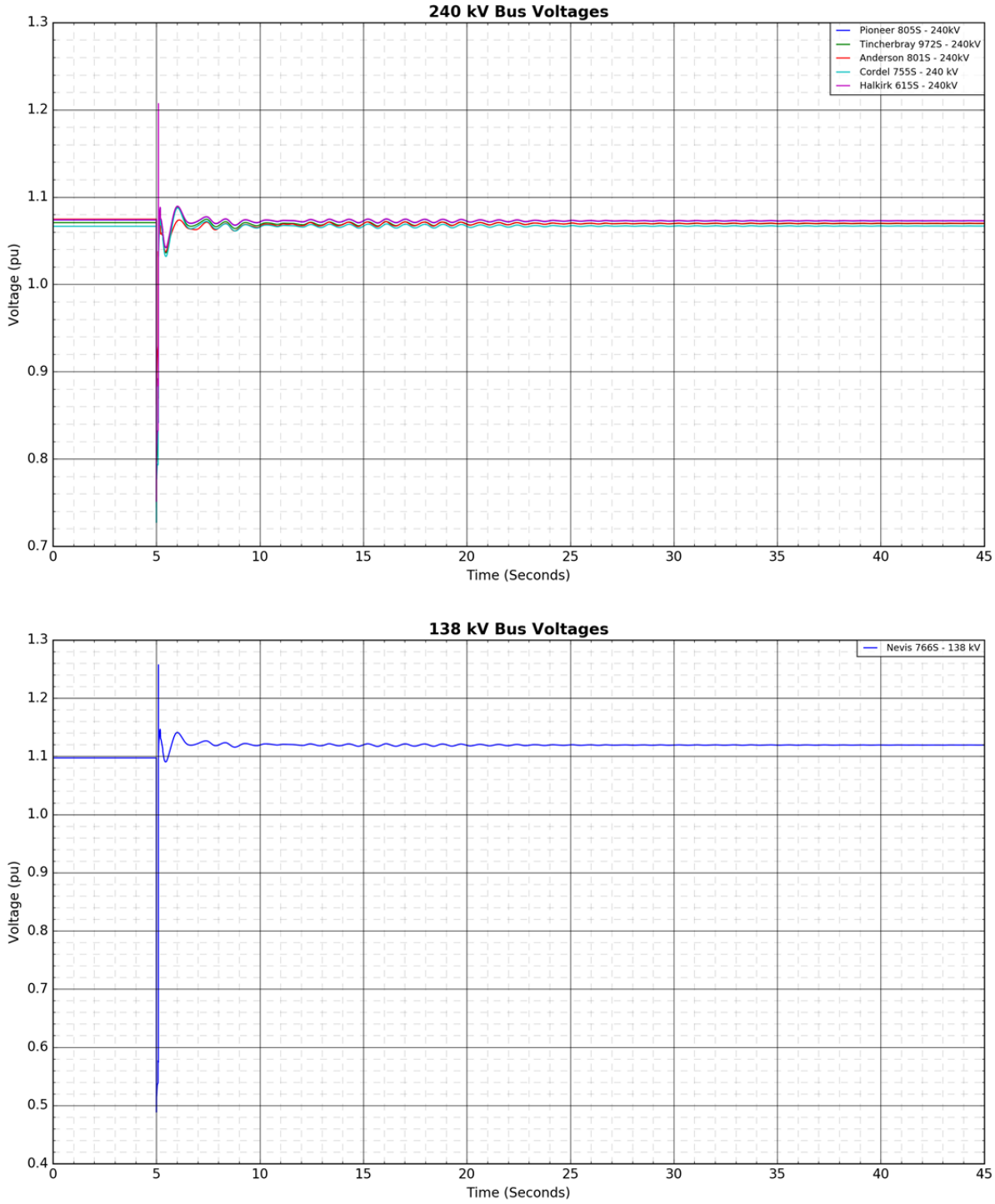

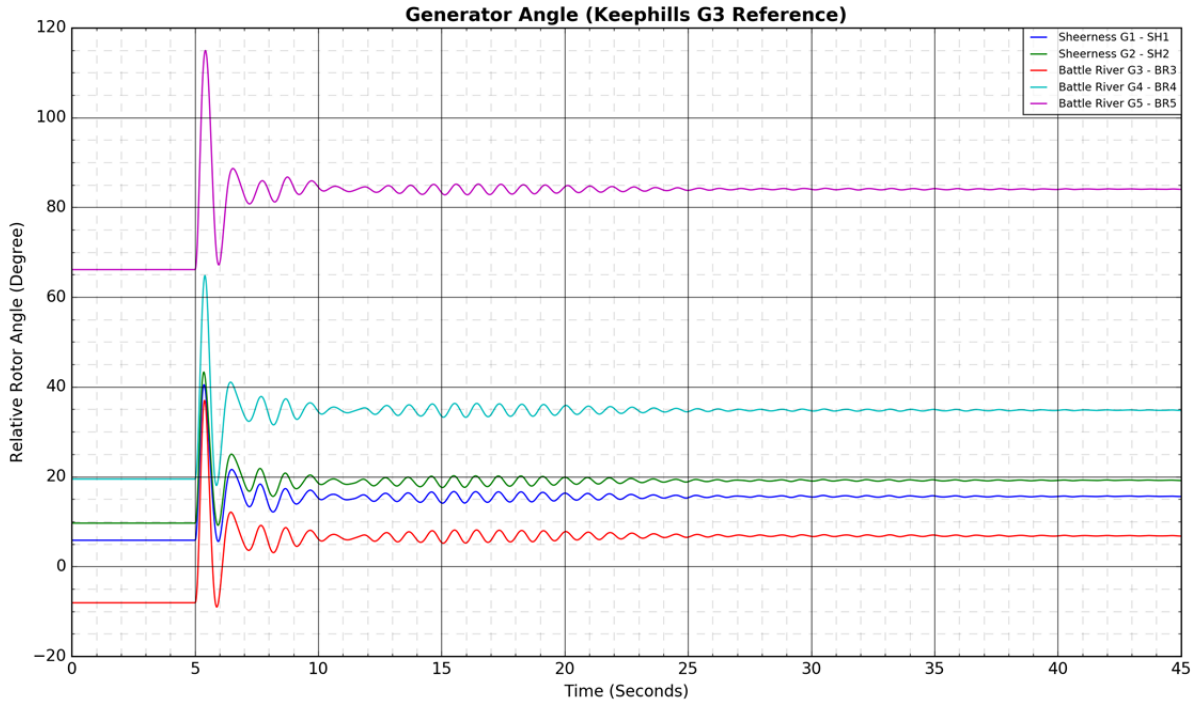
Generator Angle (Keephills G3 Reference)
Relative Rotor Angle (Degree)
Time (Seconds)
Sheerness G1 - SH1
Sheerness G2 - SH2
Battle River G3 - BR3
Battle River G4 - BR4
Battle River G5 - BR5

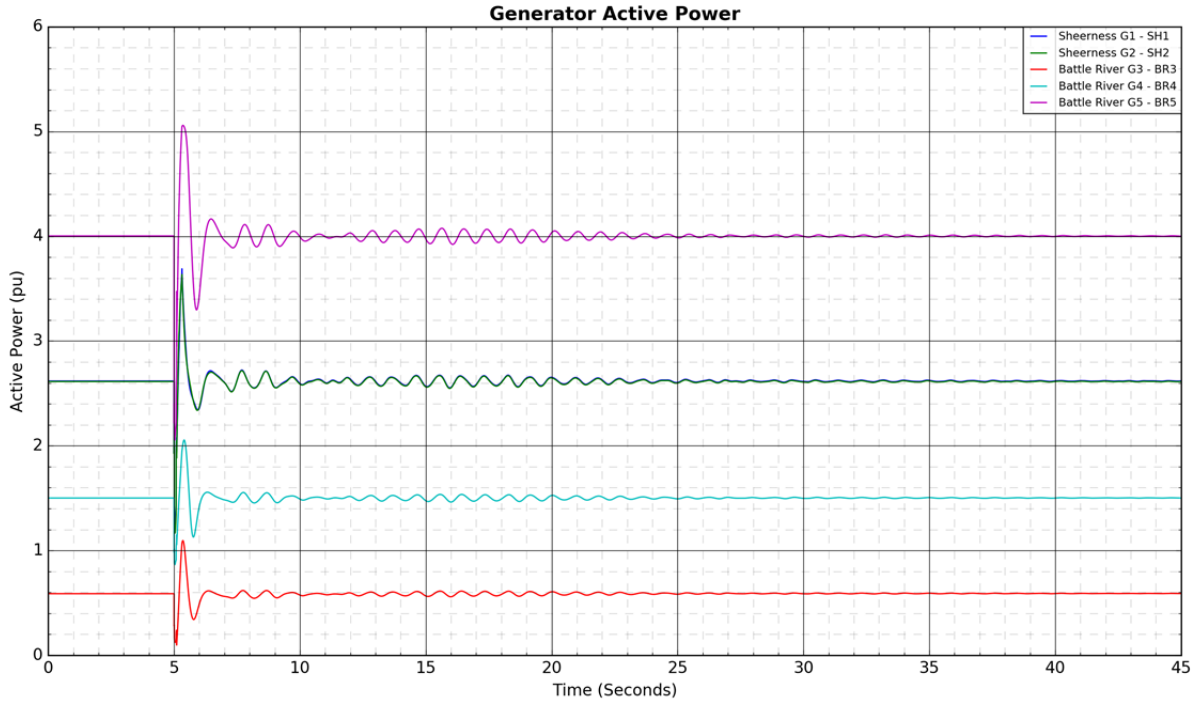
Generator Active Power
Active Power (pu)
Time (Seconds)
Sheerness G1 - SH1
Sheerness G2 - SH2
Battle River G3 - BR3
Battle River G4 - BR4
Battle River G5 - BR5

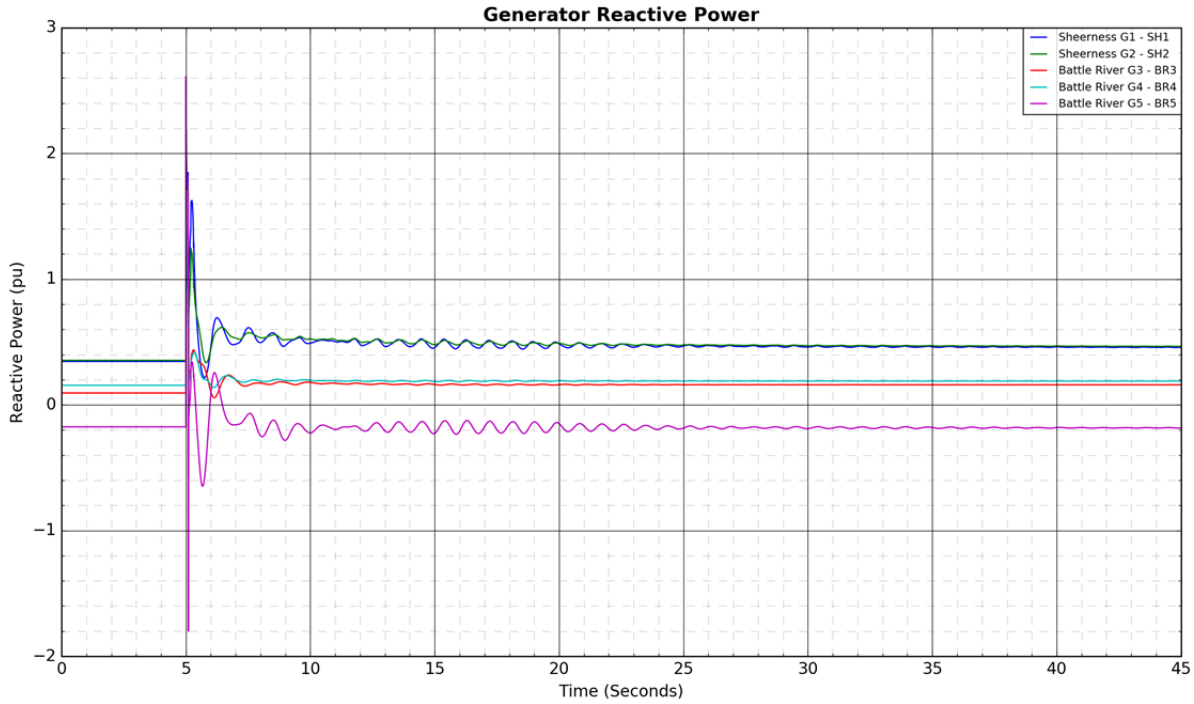
Generator Reactive Power
Sheerness G1 - SH1
Sheerness G2 - SH2
Battle River G3 - BR3
Battle River G4 - BR4
Battle River G5 - BR5
Reactive Power (pu)
Time (Seconds)

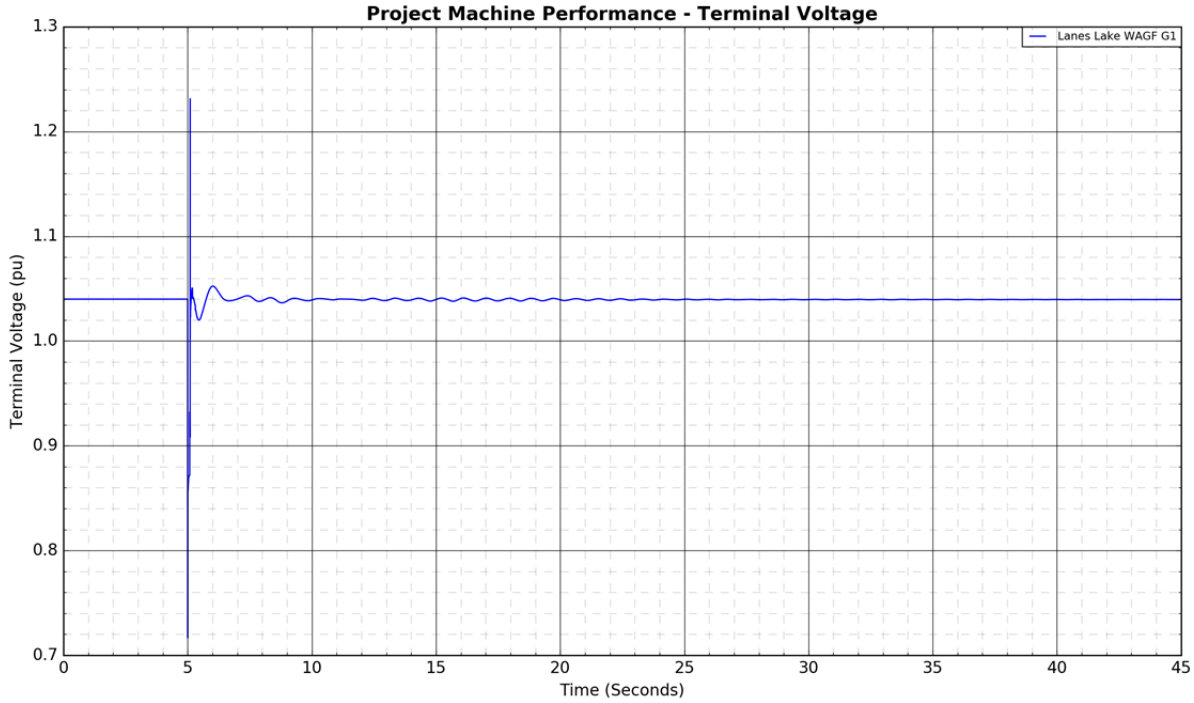
Project Machine Performance - Terminal Voltage
Lanes Lake WAGF G1
Terminal Voltage (pu)
Time (Seconds)


Project Machine Performance - Active Power
Lanes Lake WAGF G1
Active Power (pu)
Time (Seconds)
2.2
2.0
1.8
1.6
1.4
1.2
1.0
0
5
10
15
20
25
30
35
40
45

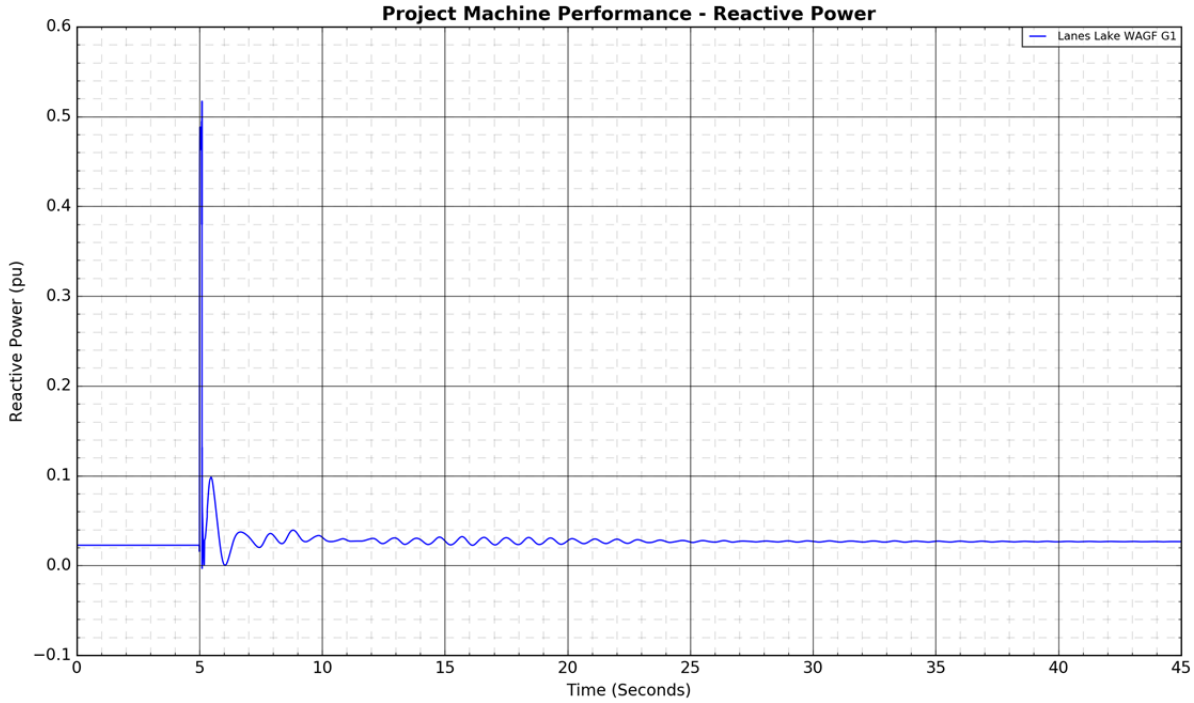
Project Machine Performance - Reactive Power
Lanes Lake WAGF G1
Reactive Power (pu)
Time (Seconds)
0.6
0.5
0.4
0.3
0.2
0.1
0.0
−0.1
0
5
10
15
20
25
30
35
40
45

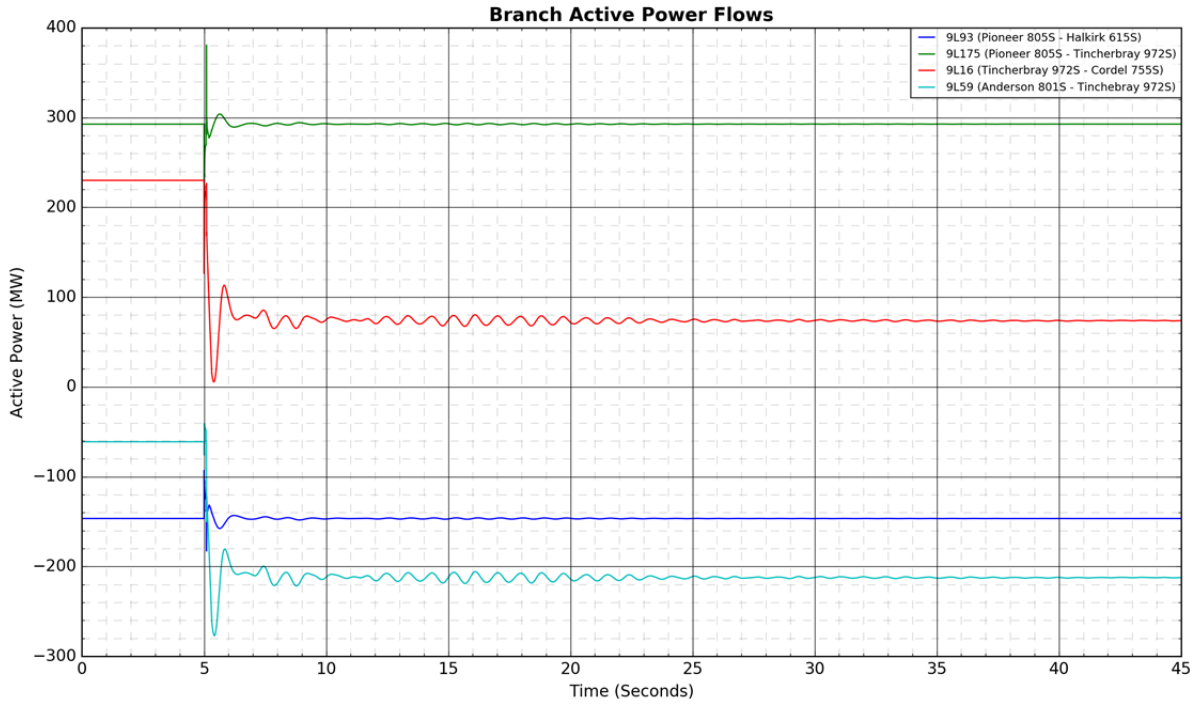
Branch Active Power Flows
9L93 (Pioneer 805S - Halkirk 615S)
9L175 (Pioneer 805S - Tincherbray 972S)
9L16 (Tincherbray 972S - Cordel 755S)
9L59 (Anderson 801S - Tinchebray 972S)
Active Power (MW)
Time (Seconds)

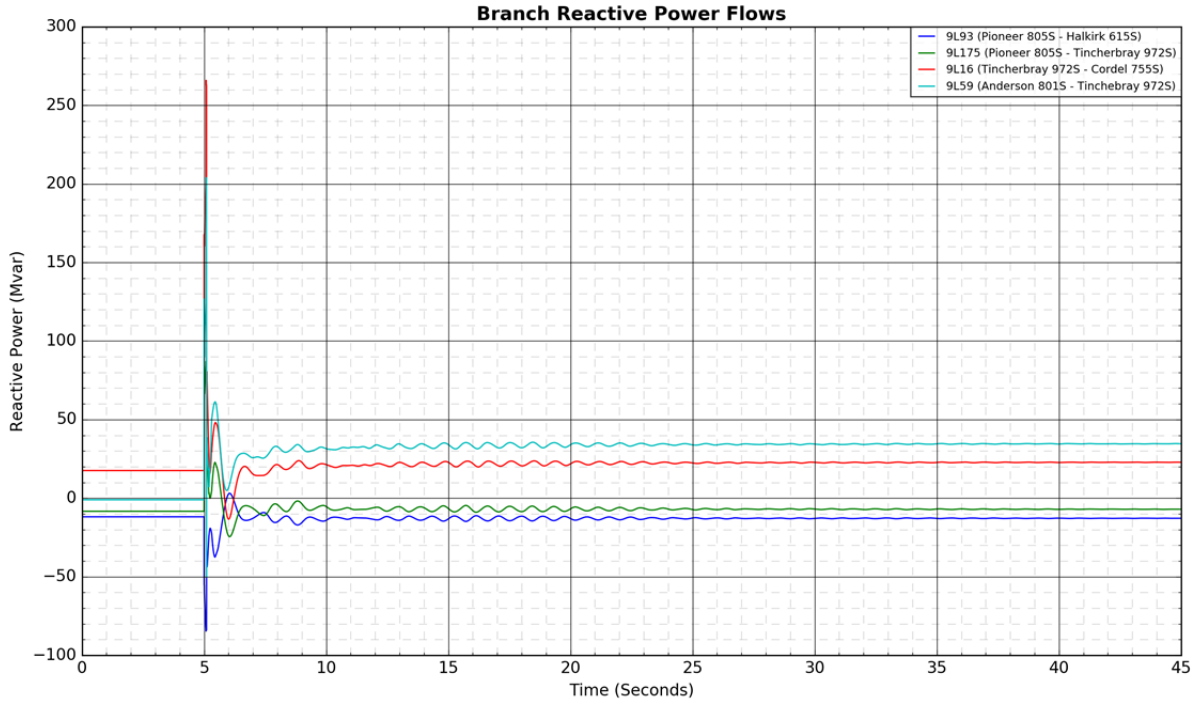
Branch Reactive Power Flows
9L93 (Pioneer 805S - Halkirk 615S)
9L175 (Pioneer 805S - Tincherbray 972S)
9L16 (Tincherbray 972S - Cordel 755S)
9L59 (Anderson 801S - Tinchebray 972S)
Reactive Power (Mvar)
Time (Seconds)

Attachment A5

Dynamic Data and Assumptions of All Equipment Proposed for Connection

Table A5-1: Generic Renewable Energy Generator/Converter Model

Renewable Energy Generator/Converter Model (REGCAU1)													
Tg	Rrpwr	Brkpt	Zerox	Lvpl1	Volim	Lvpnt1	Lvpnt0	Iolim	Tfltr	Khv	Iqrmax	Iqrmin	Accel
0.0036	10.0	0.2	0.1	0.9	0.0	0.001	0.0	-999999	0.005	0.0	10000000	-10000000	1.0
Lvplsw													
1													

Table A5-2: Generic Renewable Electrical Control Model

Generic Renewable Electrical Control Model (REECAU1)													
Vdip	Vup	Trv	dbd1	dbd2	Kqv	Iqhl	Iqll	Vref0	Iqfrz	Thld	Thld2	Tp	QMax
0.9	1.12	0.001	9999	9999	0	9999	-9999	1	0	9999	9999	0.001	0.5328
QMin	VMAX	VMIN	Kqp	Kqi	Kvp	Kvi	Vbias	Tiq	dPmax	dPmin	PMAX	PMIN	Imax
-0.3935	1.5	0.7	9999	9999	2	0	1	9999	0.3767	-0.3767	1	0	1.5
Tpord	Vq1	Iq1	Vq2	Iq2	Vq3	Iq3	Vq4	Iq4	Vp1	Ip1	Vp2	Ip2	Vp3
0.001	0.75	0.9444	0.85	0.5667	1	0.5667	1.195	0.4496	0.1	0	0.2	0.9	0.85
Ip3	Vp4	Ip4	Bus	PFFLAG	VFLAG	QFLAG	PFLAG	PQFLAG					
1.318	1.7	1.318	0	0	0	1	1	0					

Table A5-3: Generic Drive Train Model for Type 3 and Type 4 Wind Machines

Renewable Energy Generator/Converter Model (WTDTAU1)				
H	DAMP	Htfrac	Freq1	Dshaft
6.06089	37.1395	0.851785	1.428	1.0

Table A5-4: Generic Renewable Plant Control Model

Renewable Energy Generator/Converter Model (REPCAU1)													
Tfltr	Kp	Ki	Tft	Tfv	Vfrz	Rc	Xc	Kc	emax	emin	dbd1	dbd2	Qmax
0.04	0	0.726	0	0.02	0.9	0	0	0.15152	1	-1	0	0	0.2
Qmin	Kpg	Kig	Tp	Fdbd1	Fdbd2	femax	femin	Pmax	Pmin	Tg	Ddn	Dup	Bus
-0.2	0	0.6	0.1	-0.005	0	0.6667	-0.6667	1	0.1	0.02	25	0	0
FromBus	ToBus	ID	VCFlag	RefFlag	Fflag								
0	0	0	0	1	1								

Attachment A6

Post-Mitigation Power Flow Diagrams

List of Figures

Scenario and Case Name	Contingency (System Element Lost)	Details of Violation (Violation Observed On)	Figure Number
2019 Summer Light Post-Project Alternative 2 Case A	766S901T (Nevis 766S Transformer 901T)	174L (Bardo 197S - North Holden 395S)	Figure A6-1
	912L\9L912 (Red Deer 63S - Nevis 766S)	174L (Bardo 197S - North Holden 395S)	Figure A6-2
	9L20 (Nevis 766S - Cordel 755S)	174L (Bardo 197S - North Holden 395S)	Figure A6-3
		766S901T (Nevis 766S Transformer 901T)	
	9L29 (Oakland 946S - Coyote Lake 963S)	766S901T (Nevis 766S Transformer 901T)	Figure A6-4
		7L159 (7L159 Tap - Heatburg 948S)	
		7L16 (Nevis 766S - Heatburg 948S)	
		7L85 (Bullpound 803S - Anderson 801S)	
		7L85 (Wintering Hills 804S - Bullpound 803S)	
		801S901T (Anderson 801S Transformer 901T)	
2019 Summer Light Post-Project Alternative 2 Case B	757S912T (Battle River 757S Transformer 912T)	174L (Bardo 197S - North Holden 395S)	Figure A6-5
	766S901T (Nevis 766S Transformer 901T)	174L (Bardo 197S - North Holden 395S)	Figure A6-6
		701L (North Holden 395S - Strome 223S)	
	912L\9L912 (Red Deer 63S - Nevis 766S)	174L (Bardo 197S - North Holden 395S)	Figure A6-7
		701L (North Holden 395S - Strome 223S)	
	9L20 (Nevis 766S - Cordel 755S)	174L (Bardo 197S - North Holden 395S)	Figure A6-8
		766S901T (Nevis 766S Transformer 901T)	
	9L29 (Oakland 946S - Coyote Lake 963S)	766S901T (Nevis 766S Transformer 901T)	Figure A6-9
		7L159 (7L159 Tap - Heatburg 948S)	
		7L16 (Nevis 766S - Heatburg 948S)	
		7L85 (Bullpound 803S - Anderson 801S)	
		7L85 (Wintering Hills 804S - Bullpound 803S)	

Scenario and Case Name	Contingency (System Element Lost)	Details of Violation (Violation Observed On)	Figure Number
	9L46 (Lanfine 959S - Sedalia 363S)	174L (Bardo 197S - North Holden 395S)	Figure A6-10
	9L80 (Battle River 757S - Cordel 755S)	174L (Bardo 197S - North Holden 395S)	Figure A6-11
2019 Summer Peak Post-Project Alternative 2 Case A	395ST1 (North Holden 395S Transformer T1)	7L50 (Buffalo Creek 526S - 7L50 Tap)	Figure A6-12
	701L (North Holden 395S - Strome 223S)	7L50 (Buffalo Creek 526S - 7L50 Tap)	Figure A6-13
	749L\749AL (Metiskow 648S - Edgerton 899S)	7L129 (Buffalo Creek 526S - 7L129 Tap)	Figure A6-14
		7L50 (Buffalo Creek 526S - 7L50 Tap)	
	766S901T (Nevis 766S Transformer 901T)	701L (North Holden 395S - Strome 223S)	Figure A6-15
		7L50 (Buffalo Creek 526S - 7L50 Tap)	
	7L42 (Hill 751S - Lloydminster 716S)	7L50 (Buffalo Creek 526S - 7L50 Tap)	Figure A6-16
	7L701\7LA701\701L (Battle River 757S - Heisler 764S - Strome 223S)	7L50 (Buffalo Creek 526S - 7L50 Tap)	Figure A6-17
	7L749\749L\7LB749 (Edgerton 899S - Briker 880S - Lloydminster 716S)	7L50 (Buffalo Creek 526S - 7L50 Tap)	Figure A6-18
	7L77 (North Holden 395S - Vegreville 709S)	7L50 (Buffalo Creek 526S - 7L50 Tap)	Figure A6-19
	899ST3A (Edgerton 899S Transformer T3A)	7L50 (Buffalo Creek 526S - 7L50 Tap)	Figure A6-20
	912L\9L912 (Red Deer 63S - Nevis 766S)	701L (North Holden 395S - Strome 223S)	Figure A6-21
		7L50 (Buffalo Creek 526S - 7L50 Tap)	
	9L20 (Nevis 766S - Cordel 755S)	7L50 (Buffalo Creek 526S - 7L50 Tap)	Figure A6-22
	9L29 (Oakland 946S - Coyote Lake 963S)	766S901T (Nevis 766S Transformer 901T)	Figure A6-23
		7L159 (7L159 Tap - Heatburg 948S)	
		7L16 (Nevis 766S - Heatburg 948S)	
		7L85 (Wintering Hills 804S - Bullpound 803S)	
	EATL (Newell 2075S - Heathfield 2029S)	701L (North Holden 395S - Strome 223S)	Figure A6-24
		7L50 (Buffalo Creek 526S - 7L50 Tap)	
2019 Summer Peak Post-Project Alternative 2 Case B	296ST1 OR 296ST2 (Rosyth 286S Transformer T1 or T2)	7L129 (Buffalo Creek 526S - 7L129 Tap)	Figure A6-25

Scenario and Case Name	Contingency (System Element Lost)	Details of Violation (Violation Observed On)	Figure Number
	377ST1 (Hardisty 377S Transformer T1)	7L129 (Buffalo Creek 526S - 7L129 Tap)	Figure A6-26
	395ST1 (North Holden 395S Transformer T1)	7L129 (7L129 Tap - Vermilion 710S)	Figure A6-27
		7L129 (Buffalo Creek 526S - 7L129 Tap)	
	51ST3 OR 51ST4 (Wainwright 51S Transformer T3 or T4)	7L129 (Buffalo Creek 526S - 7L129 Tap)	Figure A6-28
	650ST1 (Hansman Lake 650S Transformer T1)	7L129 (Buffalo Creek 526S - 7L129 Tap)	Figure A6-29
	681L (Tucuman 478S - Hardisty 377S)	7L129 (Buffalo Creek 526S - 7L129 Tap)	Figure A6-30
	701L (North Holden 395S - Strome 223S)	7L129 (7L129 Tap - Vermilion 710S)	Figure A6-31
		7L129 (Buffalo Creek 526S - 7L129 Tap)	
	749L\749AL (Metiskow 648S - Edgerton 899S)	7L129 (7L129 Tap - Vermilion 710S)	Figure A6-32
		7L129 (Buffalo Creek 526S - 7L129 Tap)	
	766S901T (Nevis 766S Transformer 901T)	701L (North Holden 395S - Strome 223S)	Figure A6-33
		7L701 (Strome 223S - 7L701 Tap)	
		7L129 (7L129 Tap - Vermilion 710S)	
		7L129 (Buffalo Creek 526S - 7L129 Tap)	
	769L\769AL (Hardisty 377S - Clipper 656S - Rosyth 286S)	7L129 (Buffalo Creek 526S - 7L129 Tap)	Figure A6-34
	7L42 (Hill 751S - Lloydminster 716S)	7L129 (7L129 Tap - Vermilion 710S)	Figure A6-35
		7L129 (Buffalo Creek 526S - 7L129 Tap)	
	7L701\7LA701\701L (Battle River 757S - Heisler 764S - Strome 223S)	7L129 (7L129 Tap - Vermilion 710S)	Figure A6-36
		7L129 (Buffalo Creek 526S - 7L129 Tap)	
	7L749\749L\7LB749 (Edgerton 899S - Briker 880S - Lloydminster 716S)	7L129 (7L129 Tap - Vermilion 710S)	Figure A6-37
		7L129 (Buffalo Creek 526S - 7L129 Tap)	
	7L77 (North Holden 395S - Vegreville 709S)	7L129 (7L129 Tap - Vermilion 710S)	Figure A6-38
		7L129 (Buffalo Creek 526S - 7L129 Tap)	

Scenario and Case Name	Contingency (System Element Lost)	Details of Violation (Violation Observed On)	Figure Number
	885L (Hansman Lake 650S - Metiskow 648S)	7L129 (Buffalo Creek 526S - 7L129 Tap)	Figure A6-39
	899ST3A (Edgerton 899S Transformer T3A)	7L129 (7L129 Tap - Vermilion 710S)	Figure A6-40
		7L129 (Buffalo Creek 526S - 7L129 Tap)	
	912L\9L912 (Red Deer 63S - Nevis 766S)	701L (North Holden 395S - Strome 223S)	Figure A6-41
		7L701 (Strome 223S - 7L701 Tap)	
		7L129 (7L129 Tap - Vermilion 710S)	
		7L129 (Buffalo Creek 526S - 7L129 Tap)	
	954L (Hansman Lake 650S - Metiskow 648S)	7L129 (Buffalo Creek 526S - 7L129 Tap)	Figure A6-42
	9L20 (Nevis 766S - Cordel 755S)	766S901T (Nevis 766S Transformer 901T)	Figure A6-43
		7L129 (7L129 Tap - Vermilion 710S)	
		7L129 (Buffalo Creek 526S - 7L129 Tap)	
	9L29 (Oakland 946S - Coyote Lake 963S)	766S901T (Nevis 766S Transformer 901T)	Figure A6-44
		7L159 (7L159 Tap - Heatburg 948S)	
		7L16 (Nevis 766S - Heatburg 948S)	
		7L85 (Wintering Hills 804S - Bullpound 803S)	
	9L46 (Lanfine 959S - Sedalia 363S)	7L129 (Buffalo Creek 526S - 7L129 Tap)	Figure A6-45
	9L933\933L (Ware Junction 132S - Anderson 801S)	7L129 (Buffalo Creek 526S - 7L129 Tap)	Figure A6-46
	9L934\934L (Ware Junction 132S - Anderson 801S)	7L129 (Buffalo Creek 526S - 7L129 Tap)	Figure A6-47
	9L950\950L (Ware Junction 132S - Anderson 801S)	7L129 (Buffalo Creek 526S - 7L129 Tap)	Figure A6-48
	EATL (Newell 2075S - Heathfield 2029S)	701L (North Holden 395S - Strome 223S)	Figure A6-49
		7L129 (7L129 Tap - Vermilion 710S)	
		7L129 (Buffalo Creek 526S - 7L129 Tap)	
2019 Winter Peak Post-Project Alternative 2 Case A	749L\749AL (Metiskow 648S - Edgerton 899S)	7L50 (Buffalo Creek 526S - 7L50 Tap)	Figure A6-50

Scenario and Case Name	Contingency (System Element Lost)	Details of Violation (Violation Observed On)	Figure Number
	766S901T (Nevis 766S Transformer 901T)	701L (North Holden 395S - Strome 223S)	Figure A6-51
		7L701 (Strome 223S - 7L701 Tap)	
		7L50 (Buffalo Creek 526S - 7L50 Tap)	
	7L749\749L\7LB749 (Edgerton 899S - Briker 880S - Lloydminster 716S)	7L50 (Buffalo Creek 526S - 7L50 Tap)	Figure A6-52
	899ST3A (Edgerton 899S Transformer T3A)	7L50 (Buffalo Creek 526S - 7L50 Tap)	Figure A6-53
	912L\9L912 (Red Deer 63S - Nevis 766S)	701L (North Holden 395S - Strome 223S)	Figure A6-54
		7L701 (Strome 223S - 7L701 Tap)	
		7L50 (Buffalo Creek 526S - 7L50 Tap)	
	9L20 (Nevis 766S - Cordel 755S)	766S901T (Nevis 766S Transformer 901T)	Figure A6-55
2019 Winter Peak Post-Project Alternative 2 Case B	395ST1 (North Holden 395S Transformer T1)	7L129 (7L129 Tap - Vermilion 710S)	Figure A6-56
		7L129 (Buffalo Creek 526S - 7L129 Tap)	
	701L (North Holden 395S - Strome 223S)	7L129 (7L129 Tap - Vermilion 710S)	Figure A6-57
		7L129 (Buffalo Creek 526S - 7L129 Tap)	
	749L\749AL (Metiskow 648S - Edgerton 899S)	7L129 (7L129 Tap - Vermilion 710S)	Figure A6-58
		7L129 (Buffalo Creek 526S - 7L129 Tap)	
	766S901T (Nevis 766S Transformer 901T)	174L (Bardo 197S - North Holden 395S)	Figure A6-59
		701L (North Holden 395S - Strome 223S)	
		7L701 (Strome 223S - 7L701 Tap)	
		7L129 (7L129 Tap - Vermilion 710S)	
		7L129 (Buffalo Creek 526S - 7L129 Tap)	
	7L42 (Hill 751S - Lloydminster 716S)	7L129 (Buffalo Creek 526S - 7L129 Tap)	Figure A6-60
	7L701\7LA701\701L (Battle River 757S - Heisler 764S - Strome 223S)	7L129 (7L129 Tap - Vermilion 710S)	Figure A6-61
		7L129 (Buffalo Creek 526S - 7L129 Tap)	

Scenario and Case Name	Contingency (System Element Lost)	Details of Violation (Violation Observed On)	Figure Number
	7L749\749L\7LB749 (Edgerton 899S - Briker 880S - Lloydminster 716S)	7L129 (7L129 Tap - Vermilion 710S)	Figure A6-62
		7L129 (Buffalo Creek 526S - 7L129 Tap)	
	7L77 (North Holden 395S - Vegreville 709S)	7L129 (Buffalo Creek 526S - 7L129 Tap)	Figure A6-63
	899ST3A (Edgerton 899S Transformer T3A)	7L129 (7L129 Tap - Vermilion 710S)	Figure A6-64
		7L129 (Buffalo Creek 526S - 7L129 Tap)	
	912L\9L912 (Red Deer 63S - Nevis 766S)	174L (Bardo 197S - North Holden 395S)	Figure A6-65
		701L (North Holden 395S - Strome 223S)	
		7L701 (Strome 223S - 7L701 Tap)	
		7L129 (7L129 Tap - Vermilion 710S)	
		7L129 (Buffalo Creek 526S - 7L129 Tap)	
	9L20 (Nevis 766S - Cordel 755S)	766S901T (Nevis 766S Transformer 901T)	Figure A6-66
		7L129 (7L129 Tap - Vermilion 710S)	
		7L129 (Buffalo Creek 526S - 7L129 Tap)	
	9L29 (Oakland 946S - Coyote Lake 963S)	766S901T (Nevis 766S Transformer 901T)	Figure A6-67
	EATL (Newell 2075S - Heathfield 2029S)	7L129 (7L129 Tap - Vermilion 710S)	Figure A6-68
		7L129 (Buffalo Creek 526S - 7L129 Tap)	
		912L\9L912 (Red Deer 63S - Nevis 766S)	

Figure A6-1 : 2019 Summer Light Post-Project Alternative 2 Case A - Contingency of 766S901T (Nevis 766S Transformer 901T)

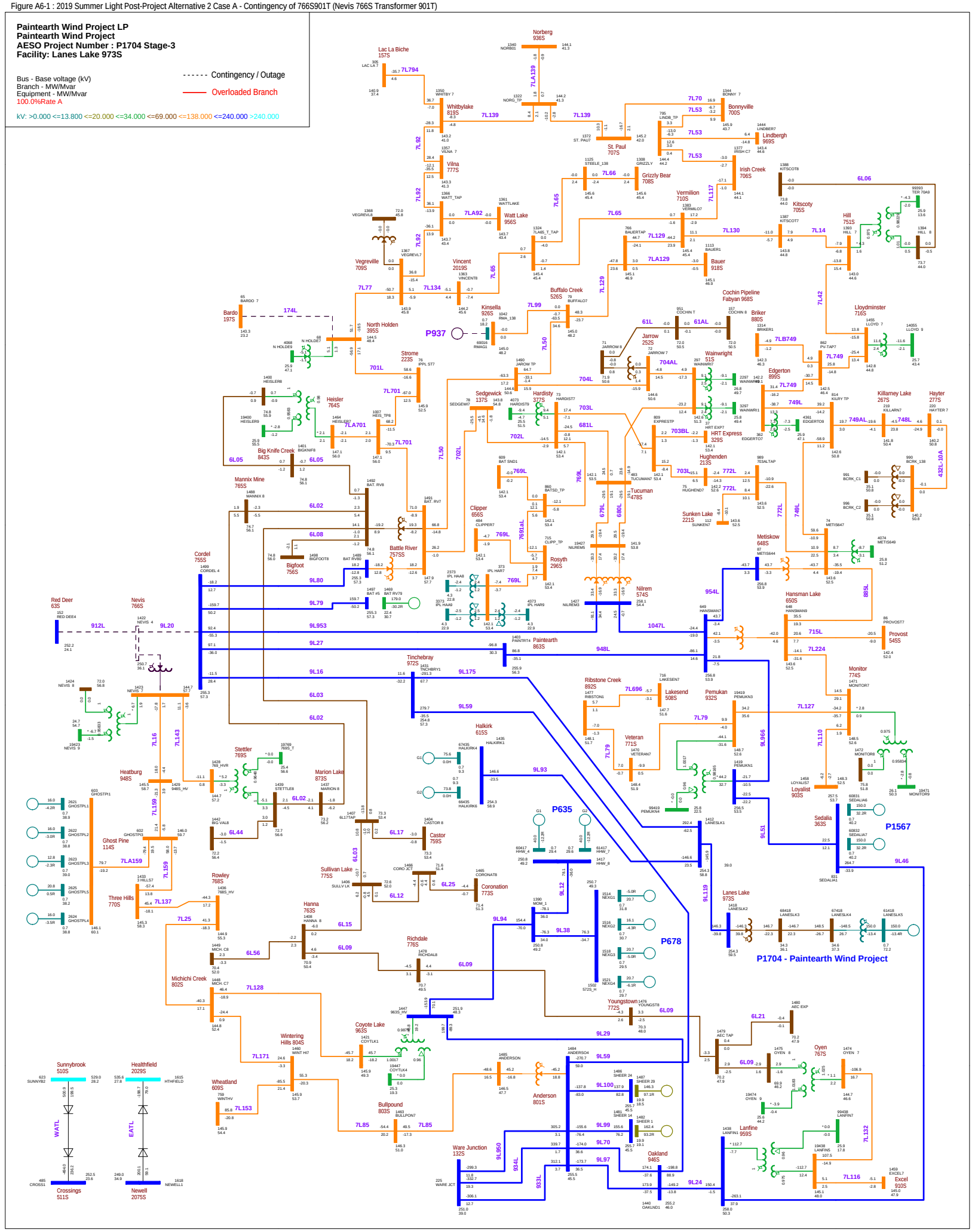

Figure A6-2 : 2019 Summer Light Post-Project Alternative 2 Case A - Contingency of 912L\9L912 (Red Deer 63S - Nevis 766S)

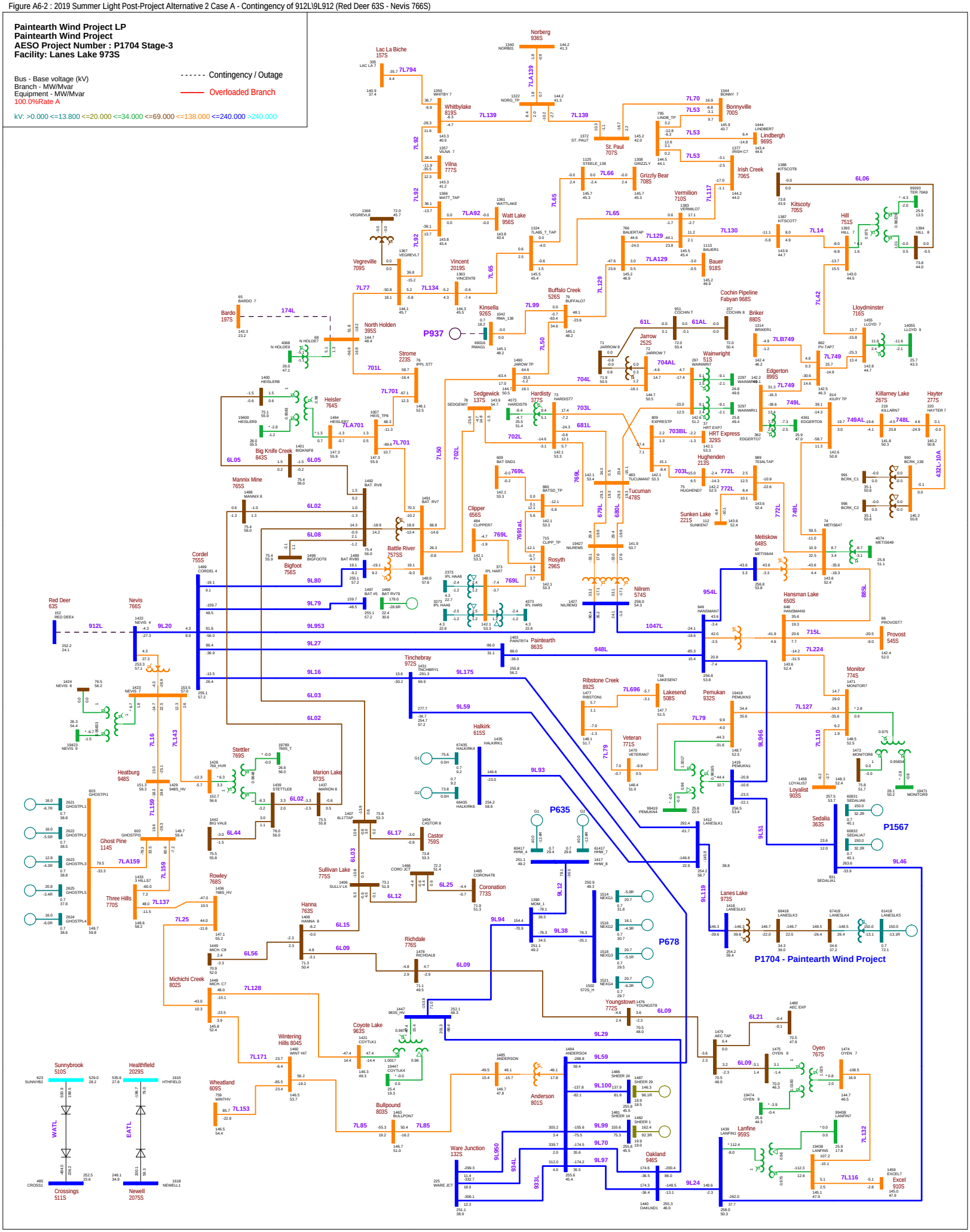

Figure A6-3 : 2019 Summer Light Post-Project Alternative 2 Case A - Contingency of 9L20 (Nevis 766S - Cordel 755S)

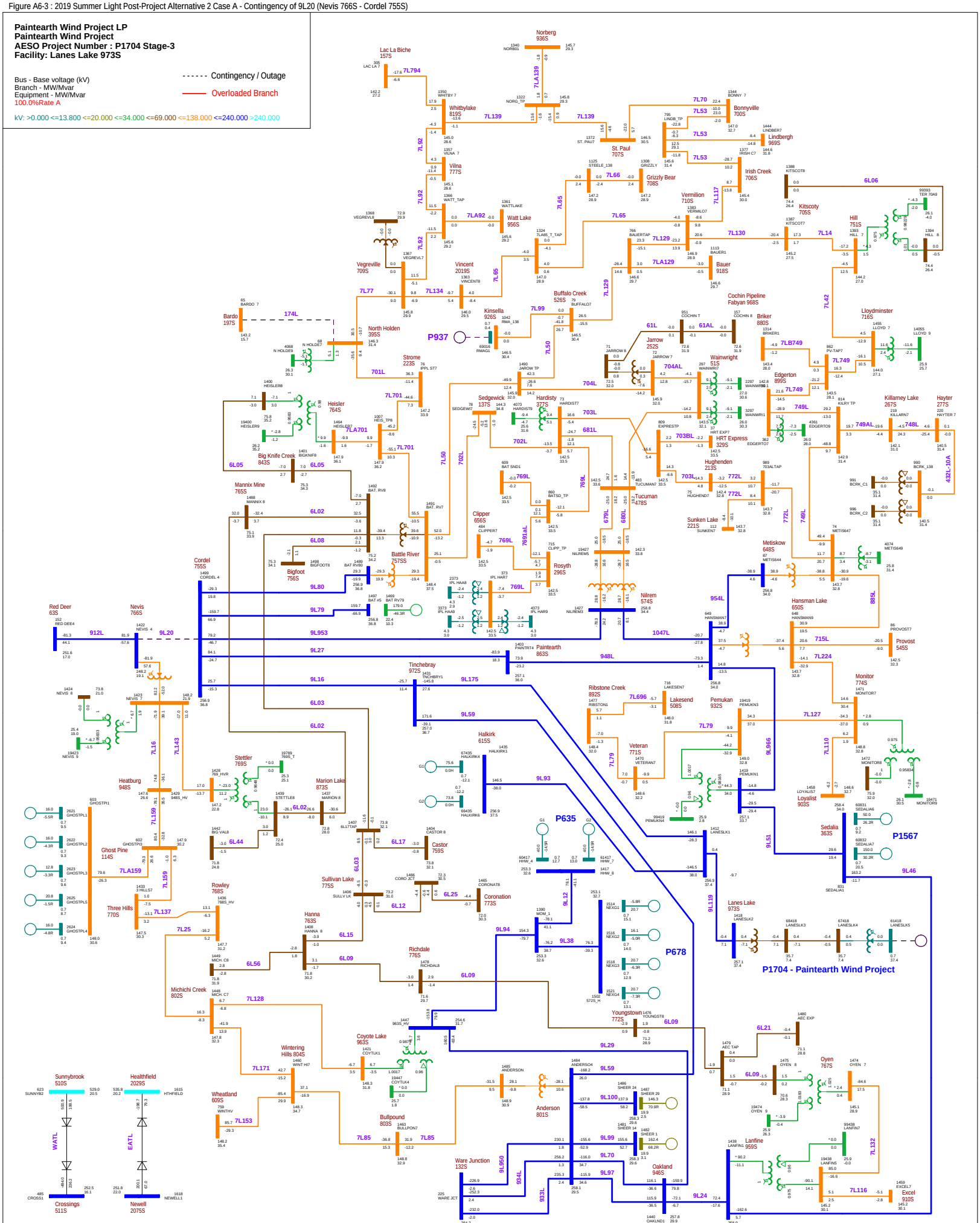

Figure A6-3 : 2019 Summer Light Post-Project Alternative 2 Case A - Contingency of 9L20 (Nevis 766S - Cordel 755S)

Figure A6-4 : 2019 Summer Light Post-Project Alternative 2 Case A - Contingency of 9L29 (Oakland 946S - Coyote Lake 963S)

Paintearth Wind Project LP
Paintearth Wind Project
AESO Project Number : P1704 Stage-3
Facility: Lanes Lake 973S

Bus - Base voltage (kV)
Branch - MW/Mvar
Equipment - MW/Mvar
100.0%Rate A

Contingency / Outage
Overloaded Branch

kV: >0.000 <=13.800 <=20.000 <=34.000 <=69.000 <=138.000 <=240.000 >240.000

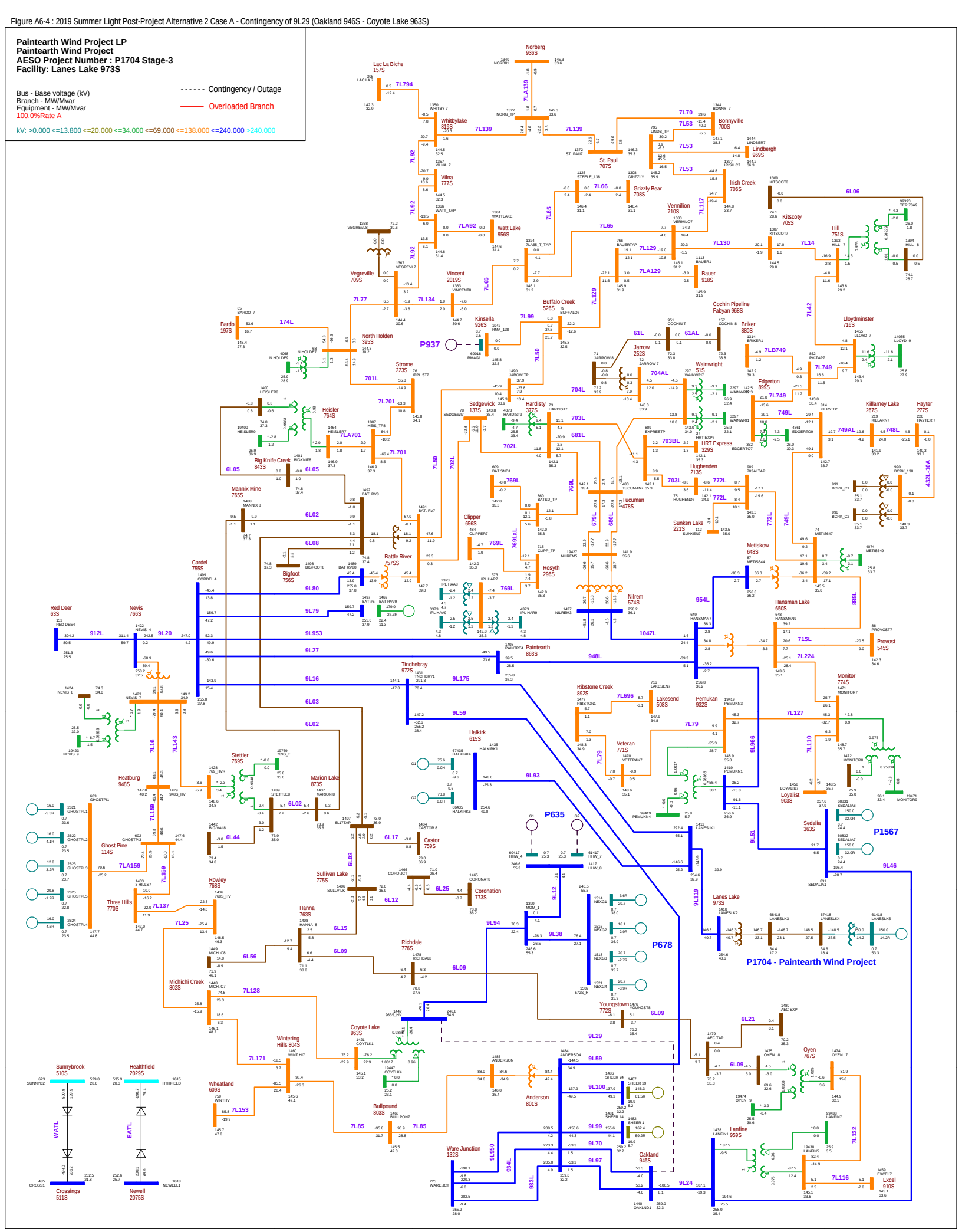

Figure A6-5 : 2019 Summer Light Post-Project Alternative 2 Case B - Contingency of 757S912T (Battle River 757S Transformer 912T)

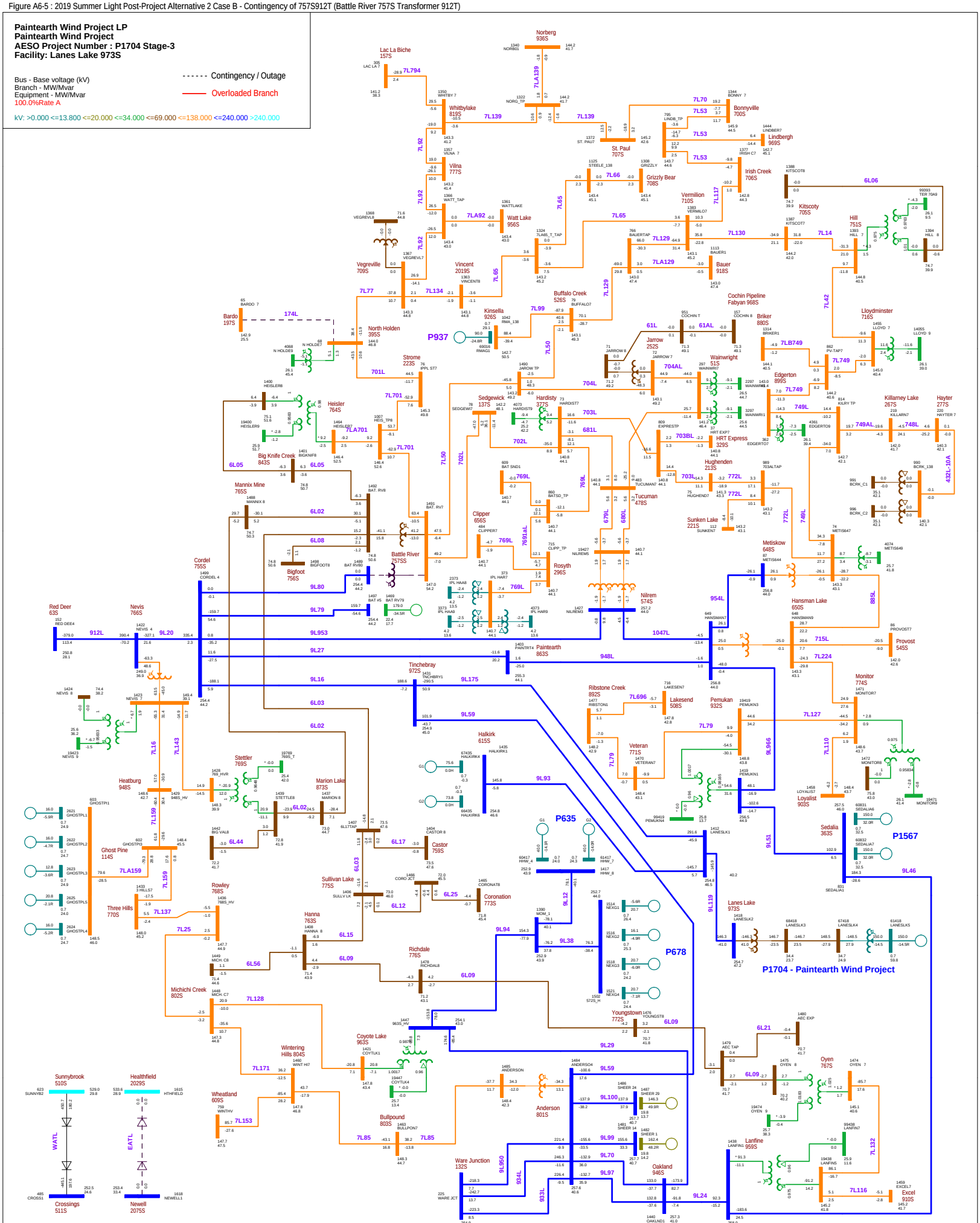

Figure A6-6 : 2019 Summer Light Post-Project Alternative 2 Case B - Contingency of 766S901T (Nevis 766S Transformer 901T)

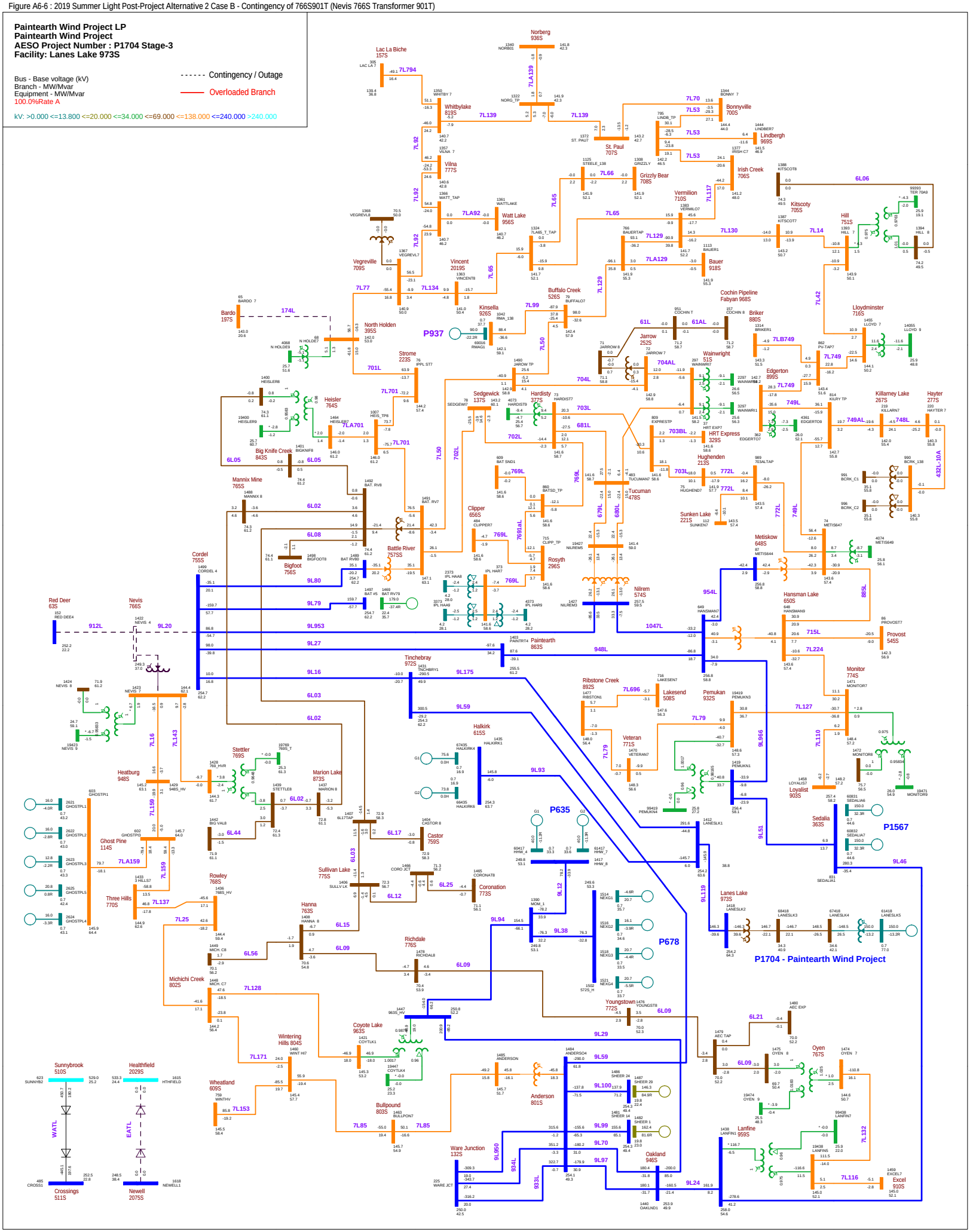

Figure A6-7 : 2019 Summer Light Post-Project Alternative 2 Case B - Contingency of 912L\9L912 (Red Deer 63S - Nevis 766S)

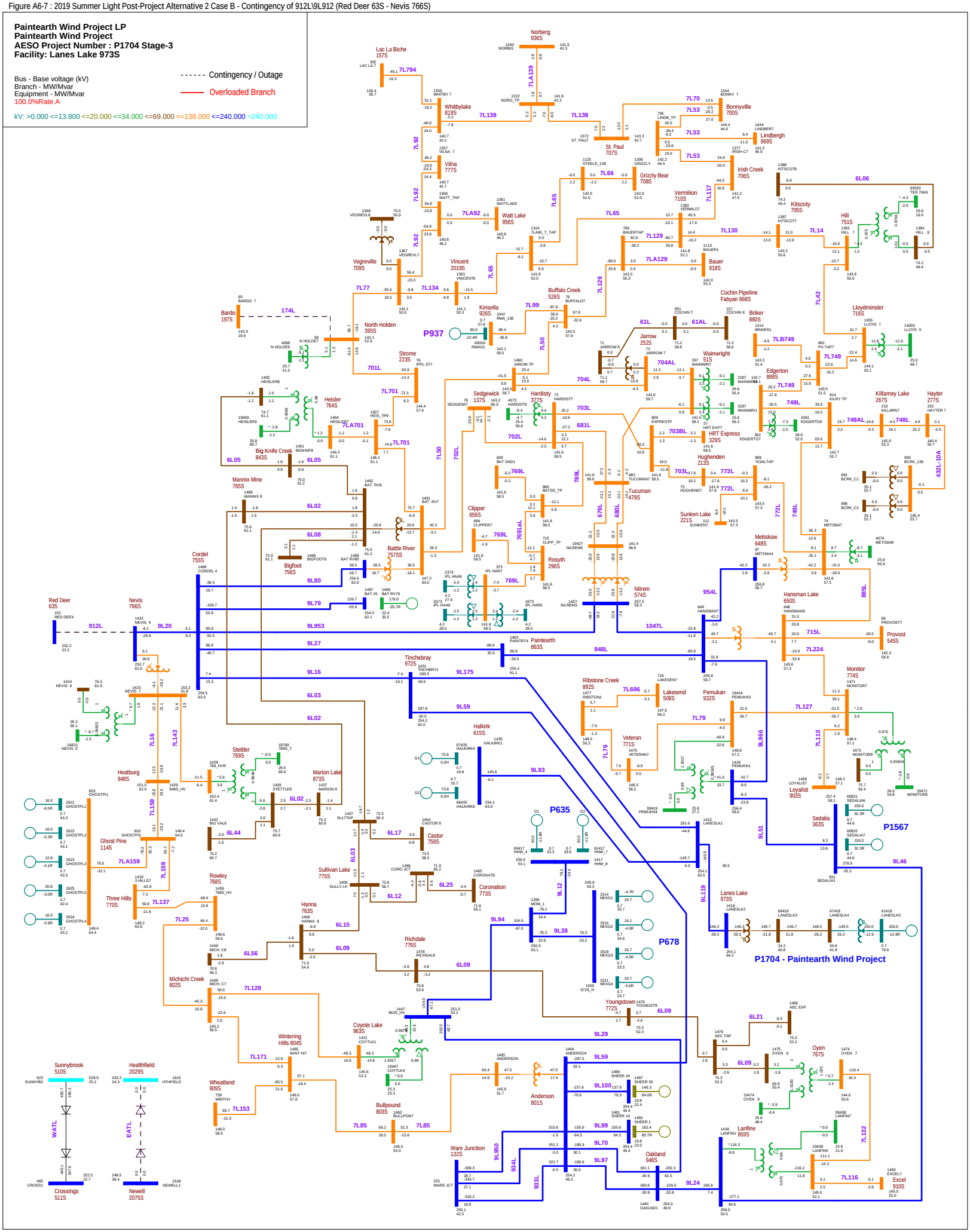

Figure A6-8 : 2019 Summer Light Post-Project Alternative 2 Case B - Contingency of 9L20 (Nevis 766S - Cordel 755S)

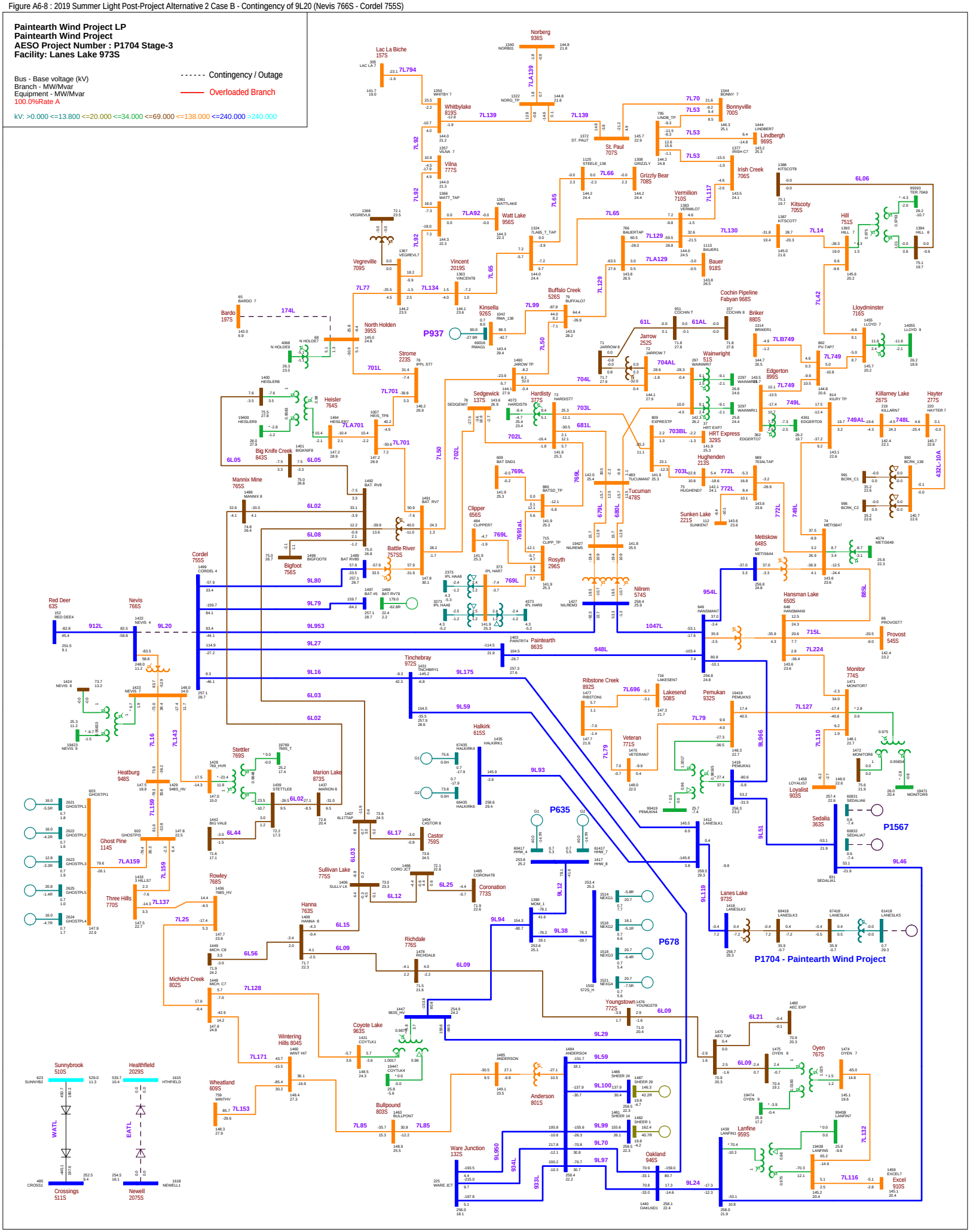

Figure A6-9 : 2019 Summer Light Post-Project Alternative 2 Case B - Contingency of 9L29 (Oakland 946S - Coyote Lake 963S)

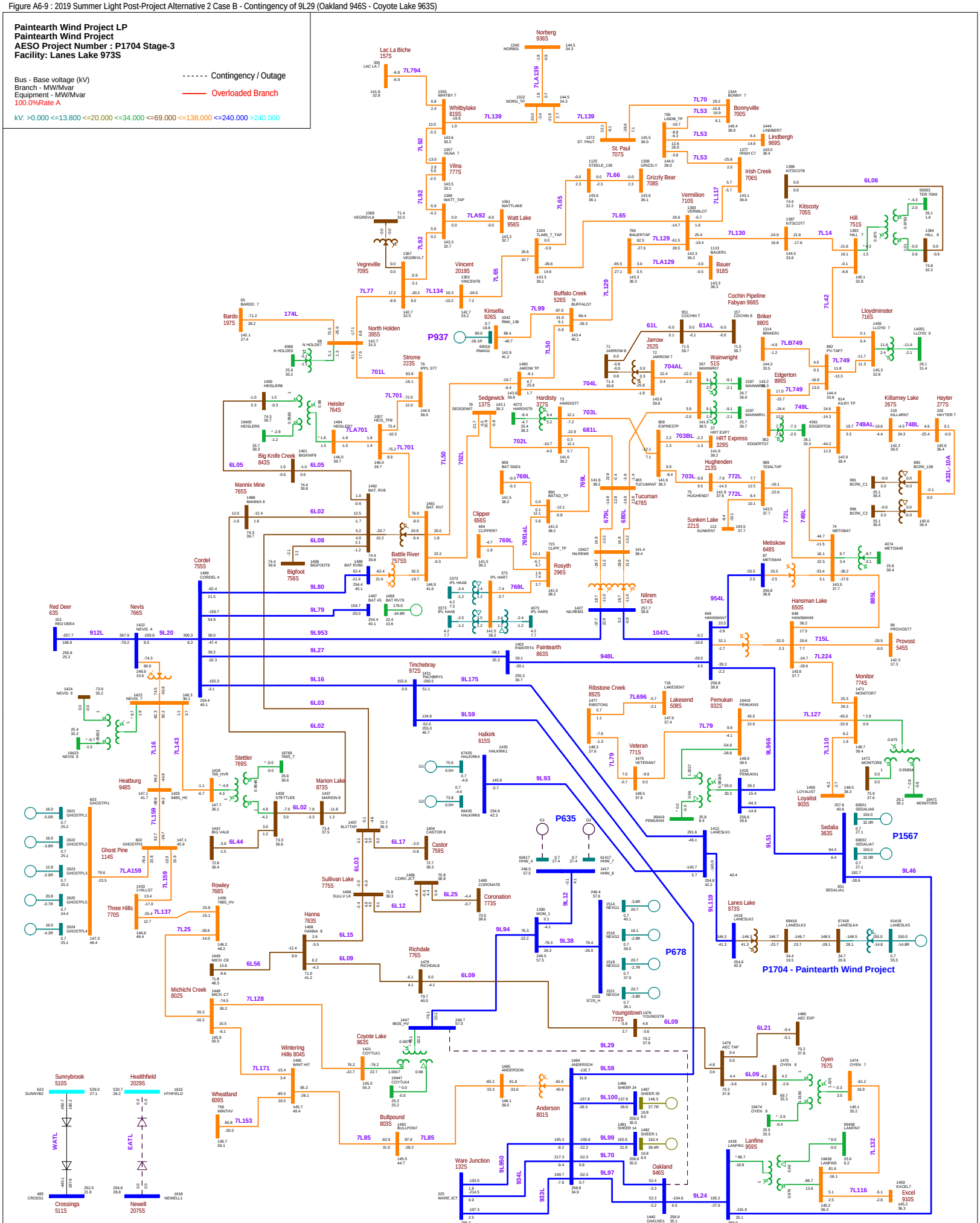

Figure A6-10 : 2019 Summer Light Post-Project Alternative 2 Case B - Contingency of 9L46 (Lanfine 959S - Sedalia 363S)

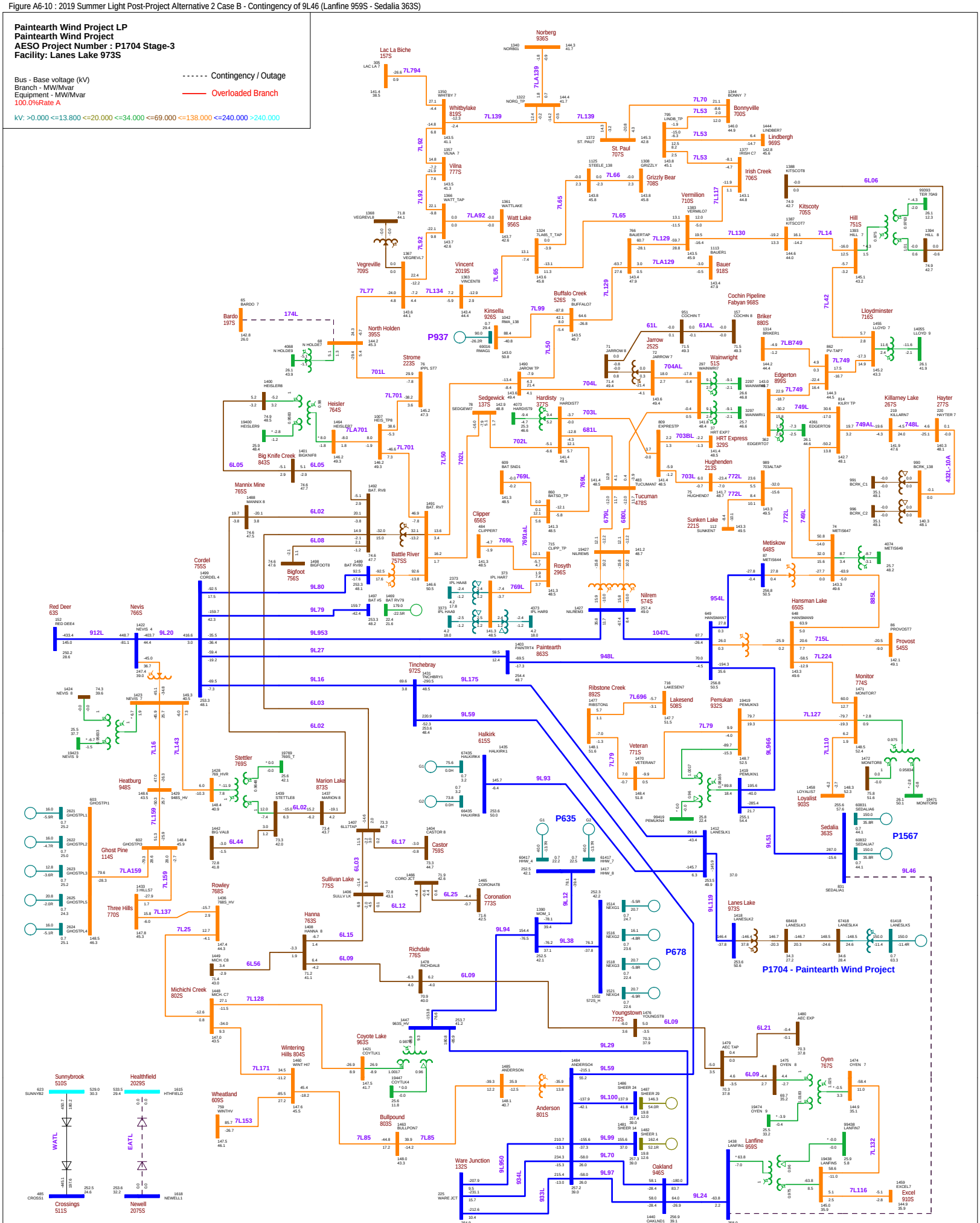
Paintearth Wind Project LP
Paintearth Wind Project
AESO Project Number : P1704 Stage-3
Facility: Lanes Lake 973S
Bus - Base voltage (kV)
Branch - MW/Mvar
Equipment - MW/Mvar
100.0%Rate A
Contingency / Outage
Overloaded Branch
kV: >0.000 <=13.800 <=20.000 <=34.000 <=69.000 <=138.000 <=240.000 >240.000
Norberg 936S
Lac La Biche 157S
Whitbylake 819S
Vilna 777S
Vegreville 709S
Vincent 2019S
Watt Lake 956S
St. Paul 707S
Bonnyville 700S
Lindbergh 969S
Irish Creek 706S
Grizzly Bear 708S
Vermilion 710S
Bauer 918S
Kitscoty 705S
Hill 751S
Buffalo Creek 526S
Kinsella 926S
Cochin Pipeline Fabyan 968S
Briker 880S
Jarrow 252S
Wainwright 51S
Edgerton 899S
Lloydminster 716S
Killarney Lake 267S
Hayter 277S
Bardo 197S
North Holden 395S
P937
Strome 223S
Heisler 764S
Sedgewick 137S
Hardisty 377S
HRT Express 329S
Hughenden 213S
Sunken Lake 221S
Tucuman 478S
Big Knife Creek 843S
Mannix Mine 765S
Clipper 656S
Battle River 757SS
Bigfoot 756S
Rosyth 296S
Nilrem 574S
Metiskow 648S
Hansman Lake 650S
Provost 545S
Cordel 755S
Red Deer 63S
Nevis 766S
Tinchebray 972S
Paintearth 863S
Ribstone Creek 892S
Lakesend 508S
Pemukan 932S
Monitor 774S
Veteran 771S
Loyalist 903S
Sedalia 363S
P1567
Heatburg 948S
Stettler 769S
Marion Lake 873S
Halkirk 615S
Ghost Pine 114S
Rowley 768S
Three Hills 770S
Sullivan Lake 775S
Coronation 773S
Castor 759S
Hanna 763S
Richdale 776S
Michichi Creek 802S
Youngstown 772S
Lanes Lake 973S
P678
P635
P1704 - Paintearth Wind Project
Coyote Lake 963S
Wintering Hills 804S
Wheatland 609S
Bullpound 803S
Anderson 801S
Ware Junction 132S
Oakland 946S
Lanfine 959S
Oyen 767S
Excel 910S
Sunnybrook 510S
Healthfield 2029S
Crossings 511S
Newell 2075S
WATL
EATL
7L794
7L139
7LA139
7L70
7L53
7L92
7LA92
7L65
7L117
7L130
7L14
7L129
7LA129
7L66
7L77
7L134
7L99
7L50
7L42
7L749
7L749A
7L748
7L749
7L701
7LA701
7L702
7L703
7L681
7L704
7L704AL
7L61
7L61AL
7LB749
7L703BL
7L703
7L772
7L772L
7L749L
7L769
7L769L
7L691AL
7L679L
7L680L
7L50
7L65
7L129
7L92
7L93
7L134
7L66
7L139
7L70
7L53
7L117
7L130
7L14
7L749
7L749A
7L748
7L

Figure A6-11 : 2019 Summer Light Post-Project Alternative 2 Case B - Contingency of 9L80 (Battle River 757S - Cordel 755S)

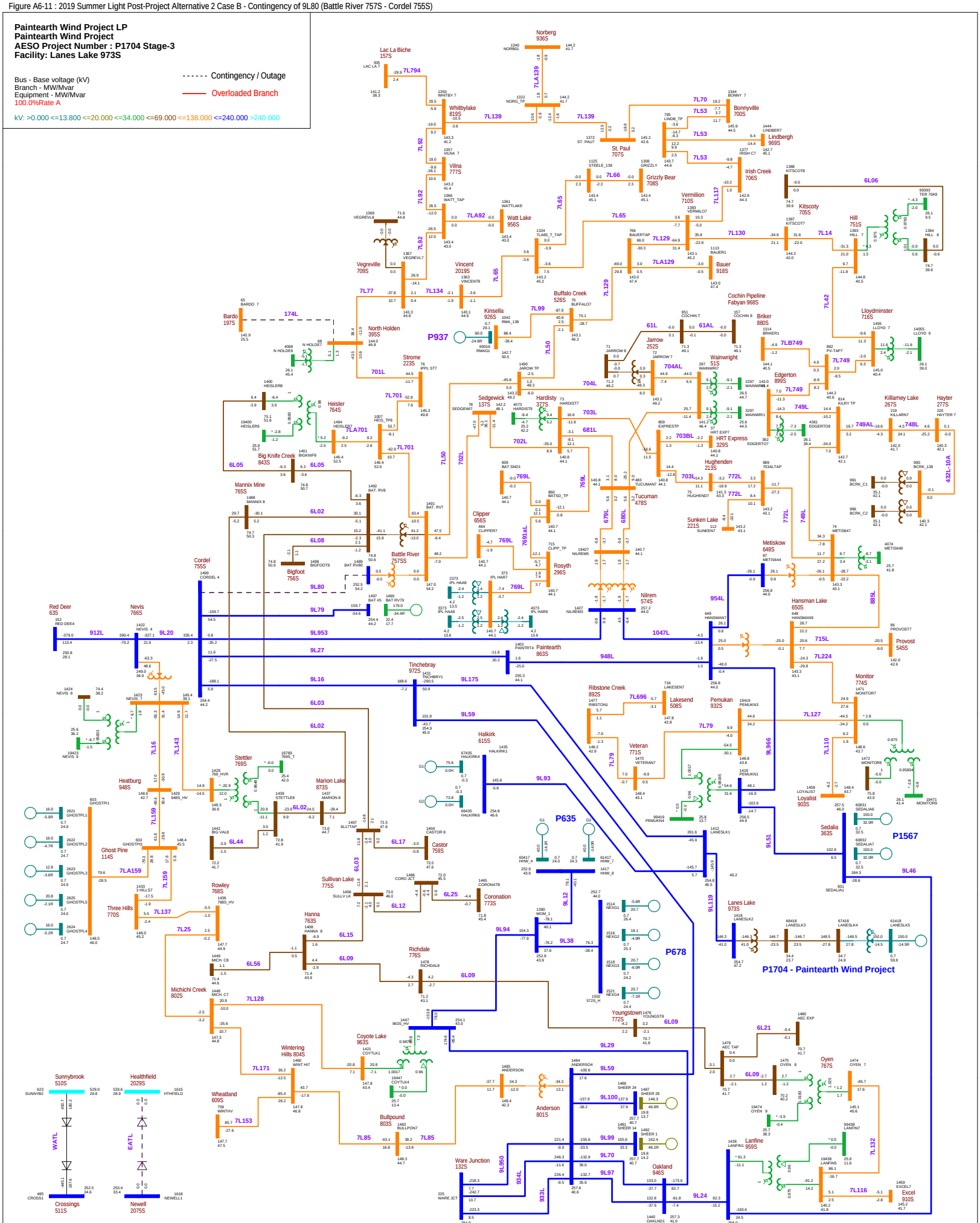

Figure A6-12 : 2019 Summer Peak Post-Project Alternative 2 Case A - Contingency of 395ST1 (North Holden 395S Transformer T1)

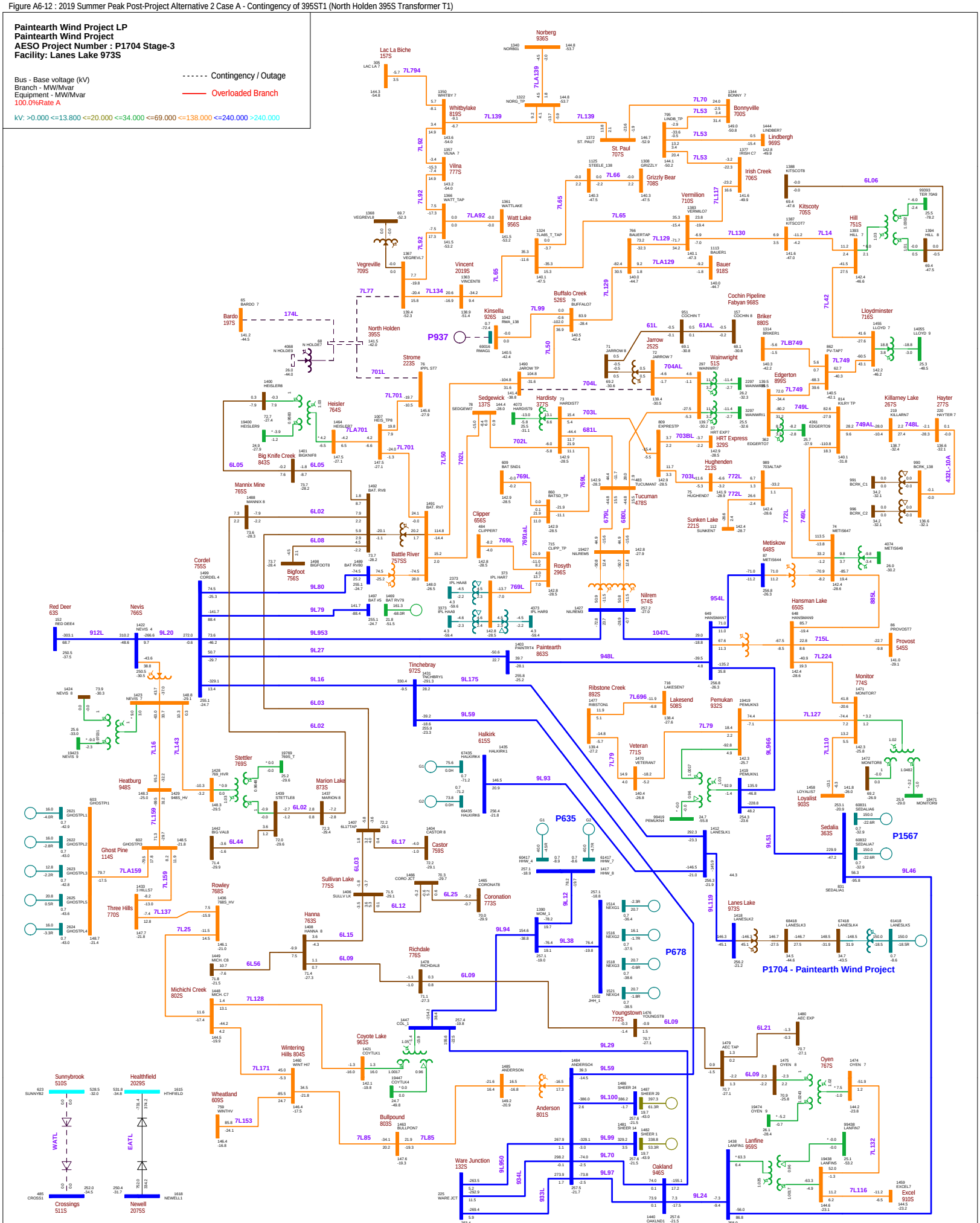

Figure A6-13 : 2019 Summer Peak Post-Project Alternative 2 Case A - Contingency of 701L (North Holden 395S - Strome 223S)

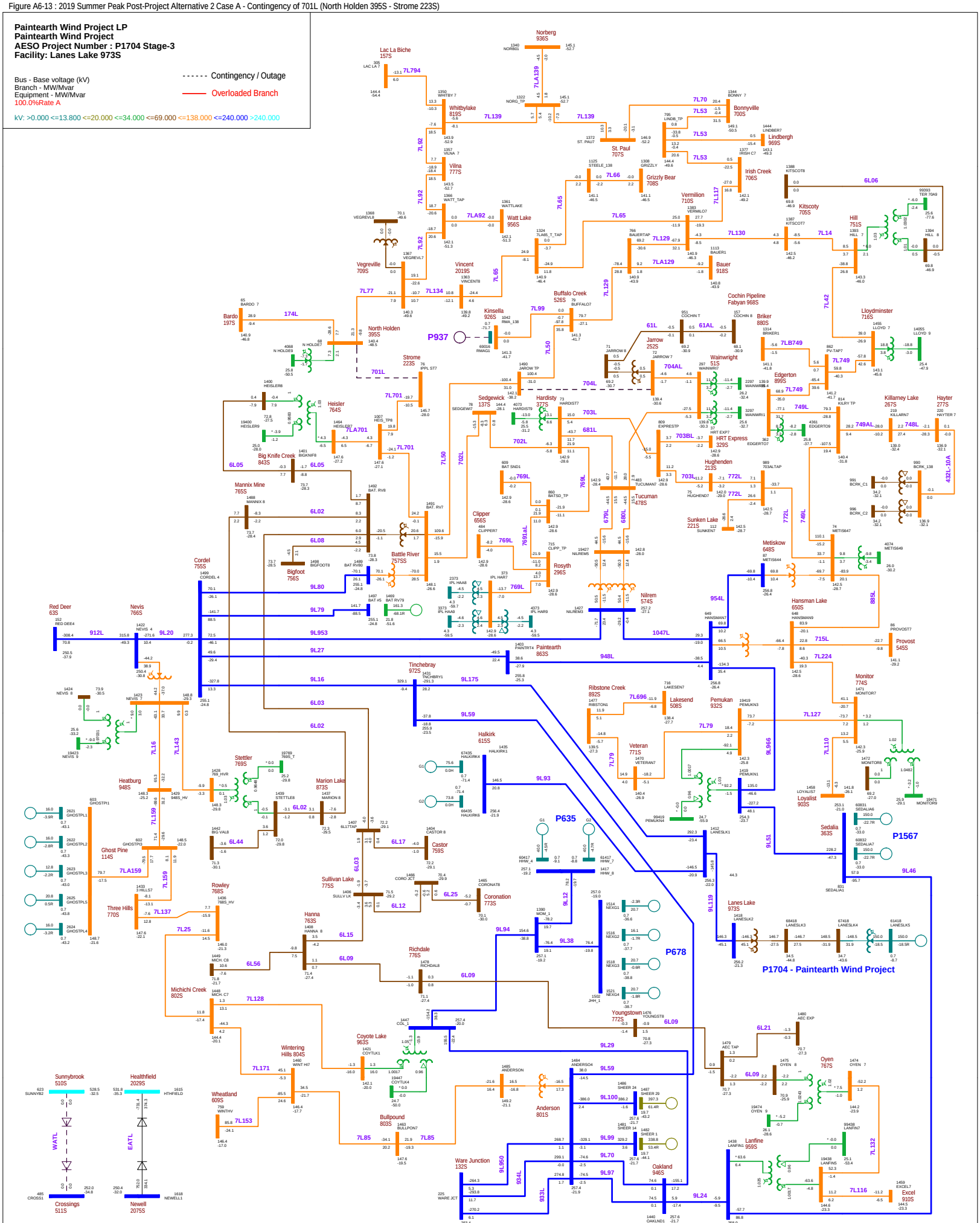

Figure A6-14 : 2019 Summer Peak Post-Project Alternative 2 Case A - Contingency of 749L\749AL (Metiskow 648S - Edgerton 899S)

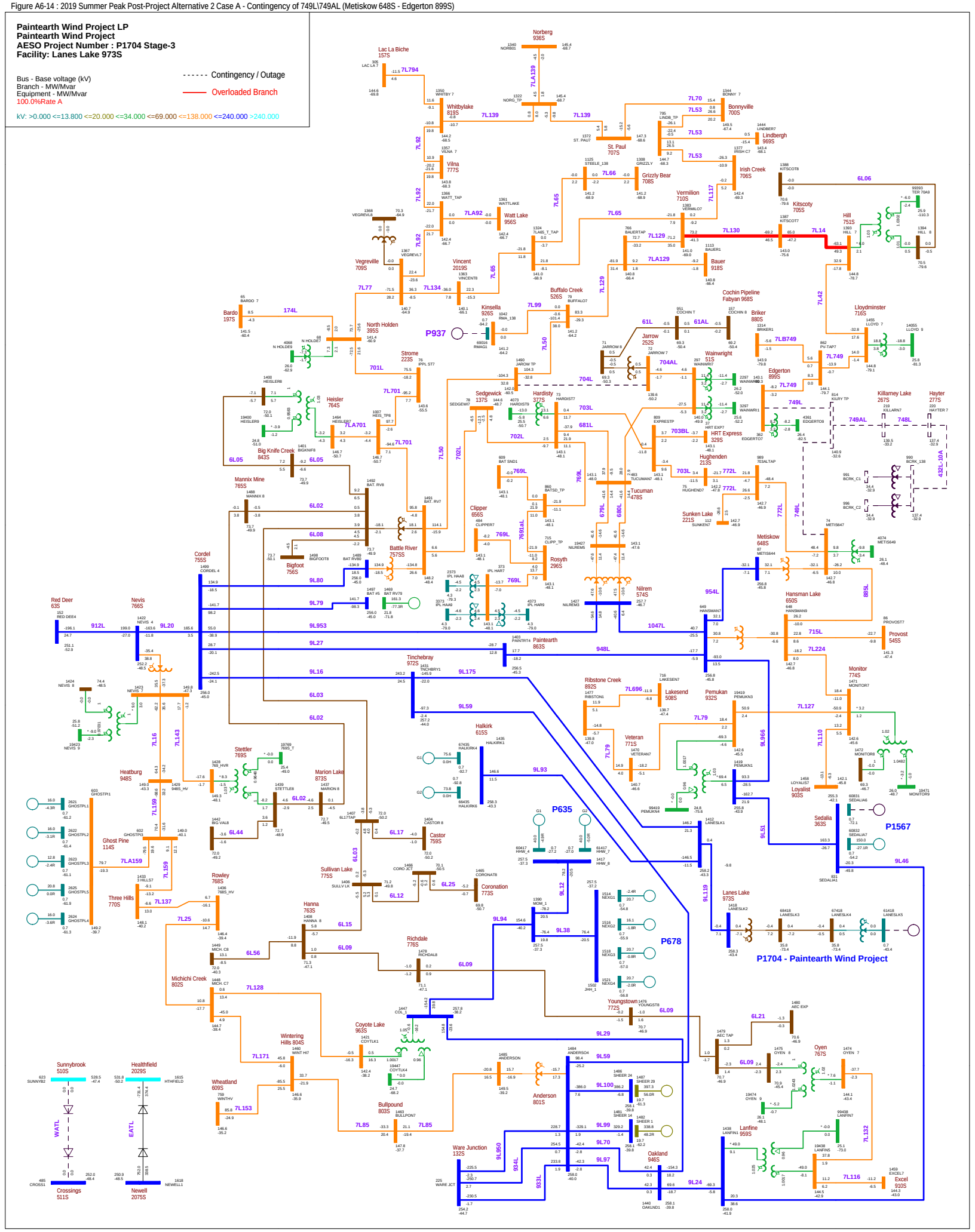

Figure A6-15 : 2019 Summer Peak Post-Project Alternative 2 Case A - Contingency of 766S901T (Nevis 766S Transformer 901T)

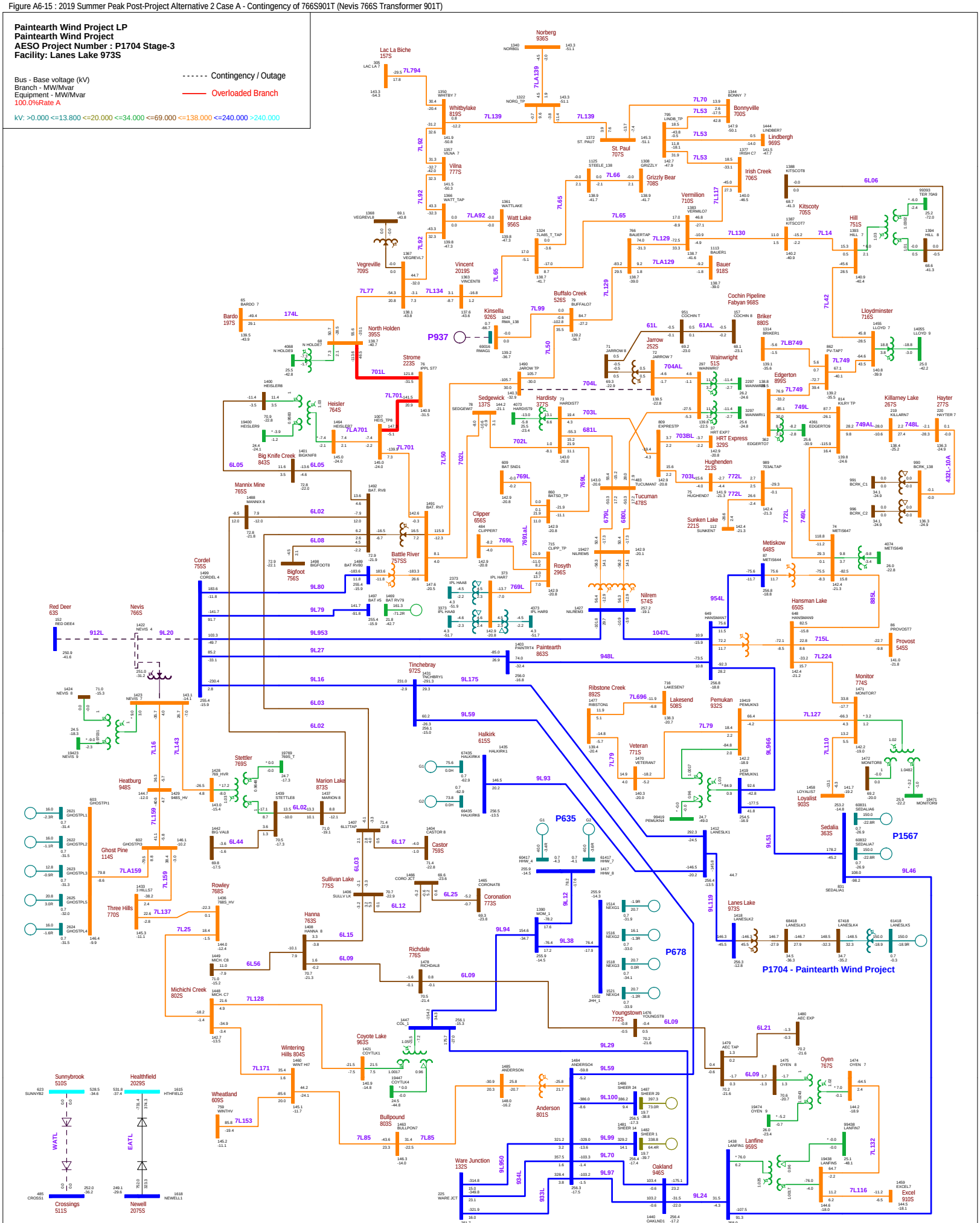

Figure A6-16 : 2019 Summer Peak Post-Project Alternative 2 Case A - Contingency of 7L42 (Hill 751S - Lloydminster 716S)

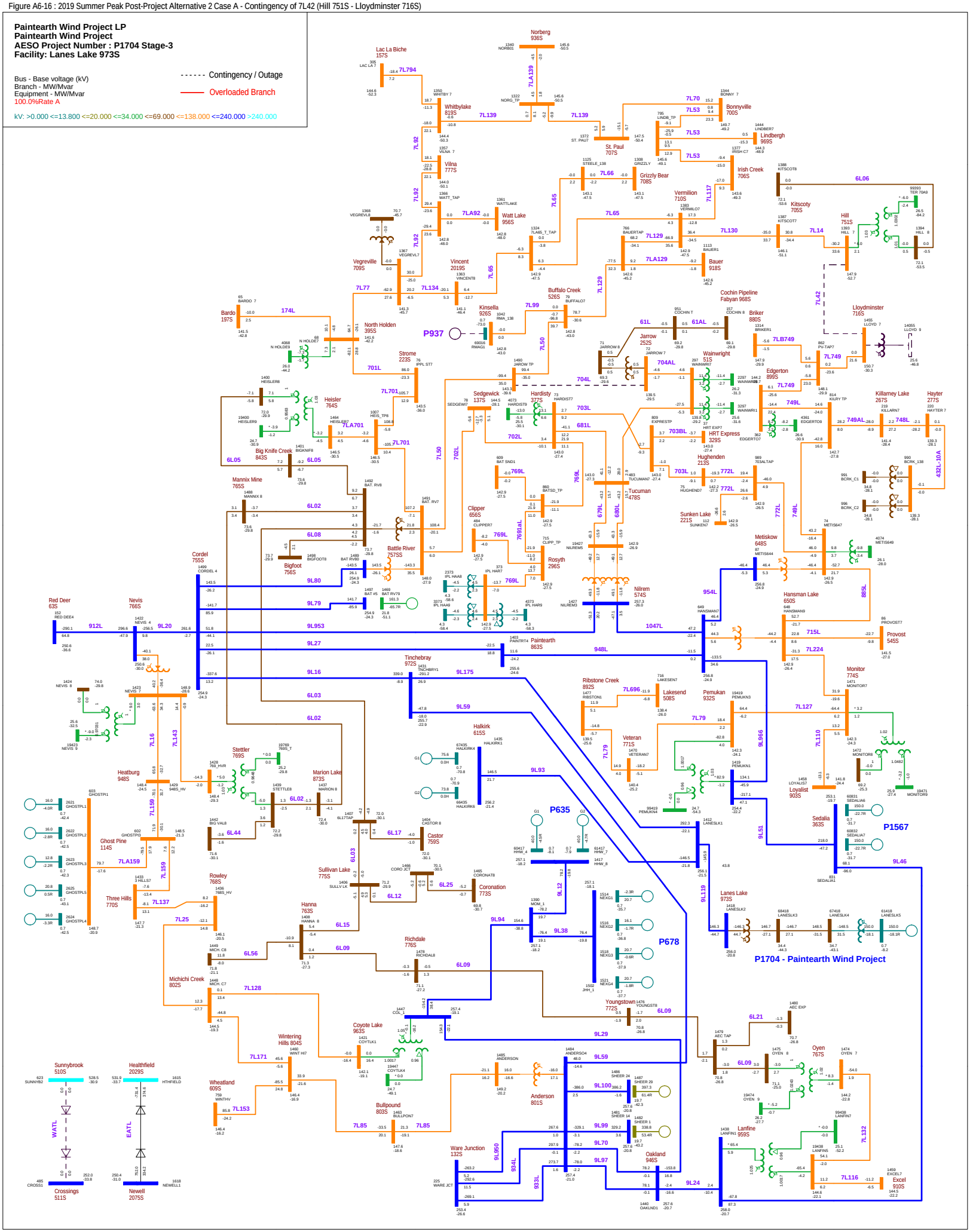

Figure A6-17 : 2019 Summer Peak Post-Project Alternative 2 Case A - Contingency of 7L701\7LA701\701L (Battle River 757S - Heisler 764S - Strome 223S)

Paintearth Wind Project LP
Paintearth Wind Project
AESO Project Number : P1704 Stage-3
Facility: Lanes Lake 973S

Bus - Base voltage (kV)
Branch - MW/Mvar
Equipment - MW/Mvar
100.0%Rate A

Contingency / Outage
Overloaded Branch

kV: >0.000 <=13.800 <=20.000 <=34.000 <=69.000 <=138.000 <=240.000 >240.000

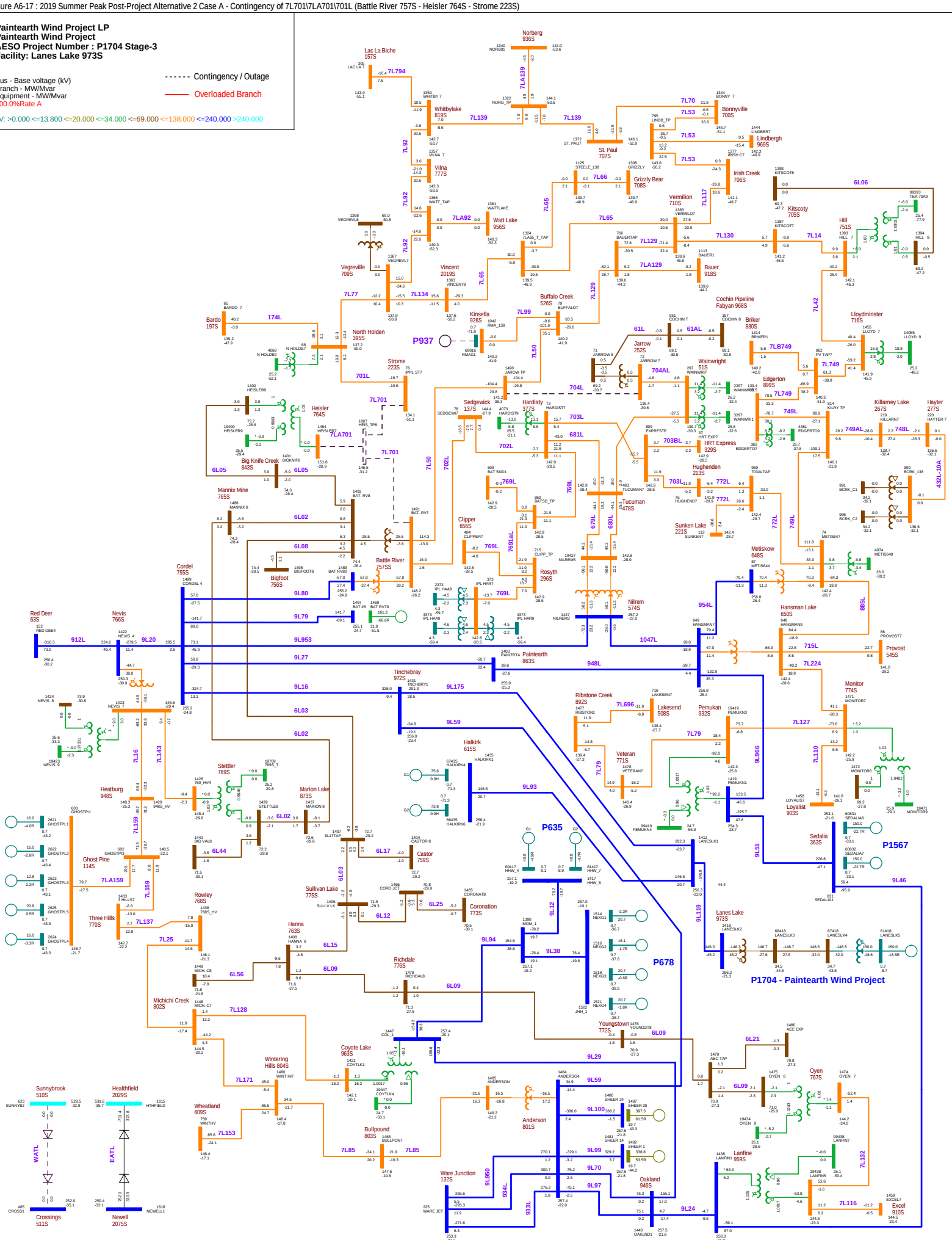

Figure A6-18 : 2019 Summer Peak Post-Project Alternative 2 Case A - Contingency of 7L749\749L\7LB749 (Edgerton 899S - Briker 880S - Lloydminster 716S)

Paintearth Wind Project LP
Paintearth Wind Project
AESO Project Number : P1704 Stage-3
Facility: Lanes Lake 973S

Bus - Base voltage (kV)
Branch - MW/Mvar
Equipment - MW/Mvar
100.0%Rate A

Contingency / Outage
Overloaded Branch

kV: >0.000 <=13.800 <=20.000 <=34.000 <=69.000 <=138.000 <=240.000 >240.000

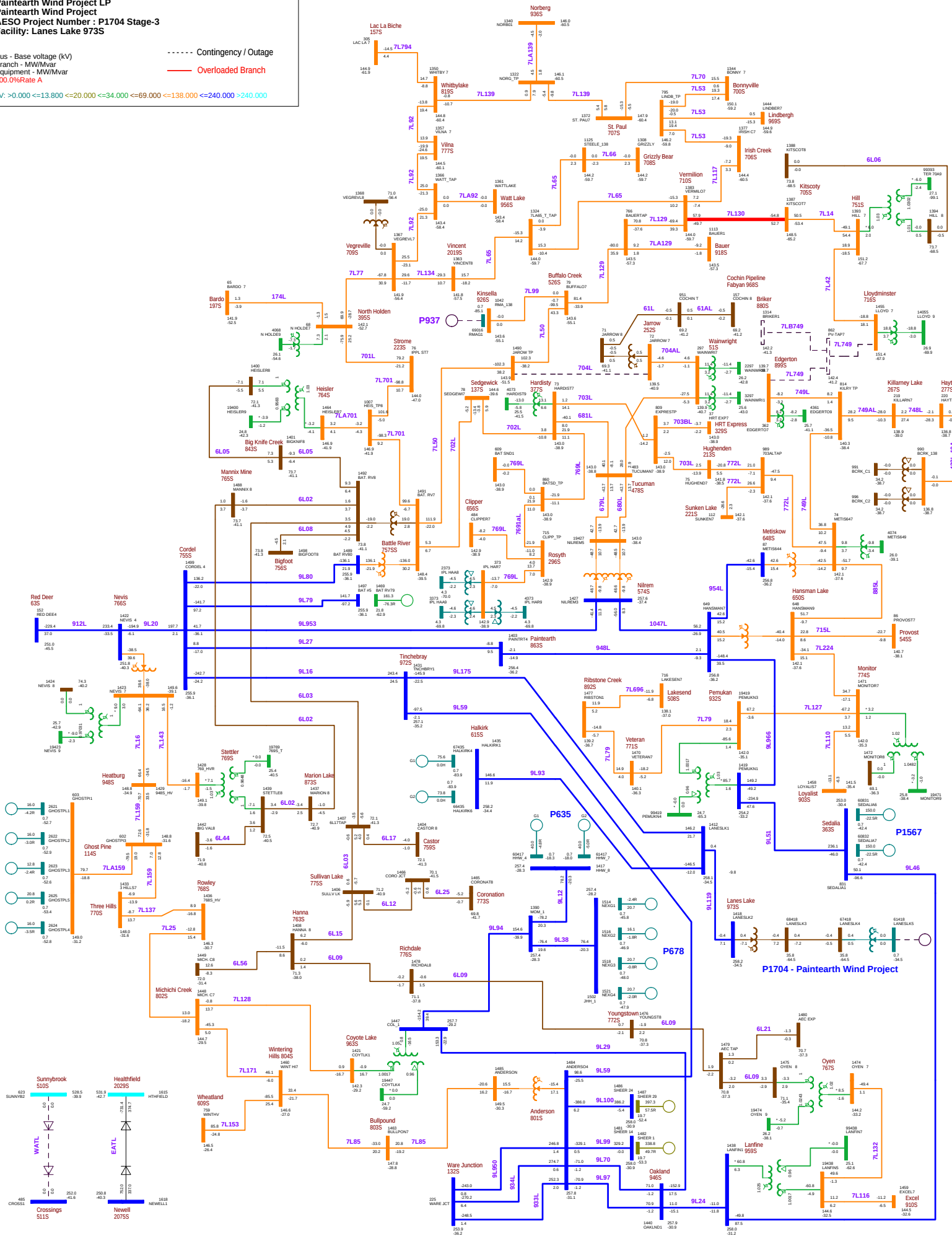

Figure A6-19 : 2019 Summer Peak Post-Project Alternative 2 Case A - Contingency of 7L77 (North Holden 395S - Vegreville 709S)

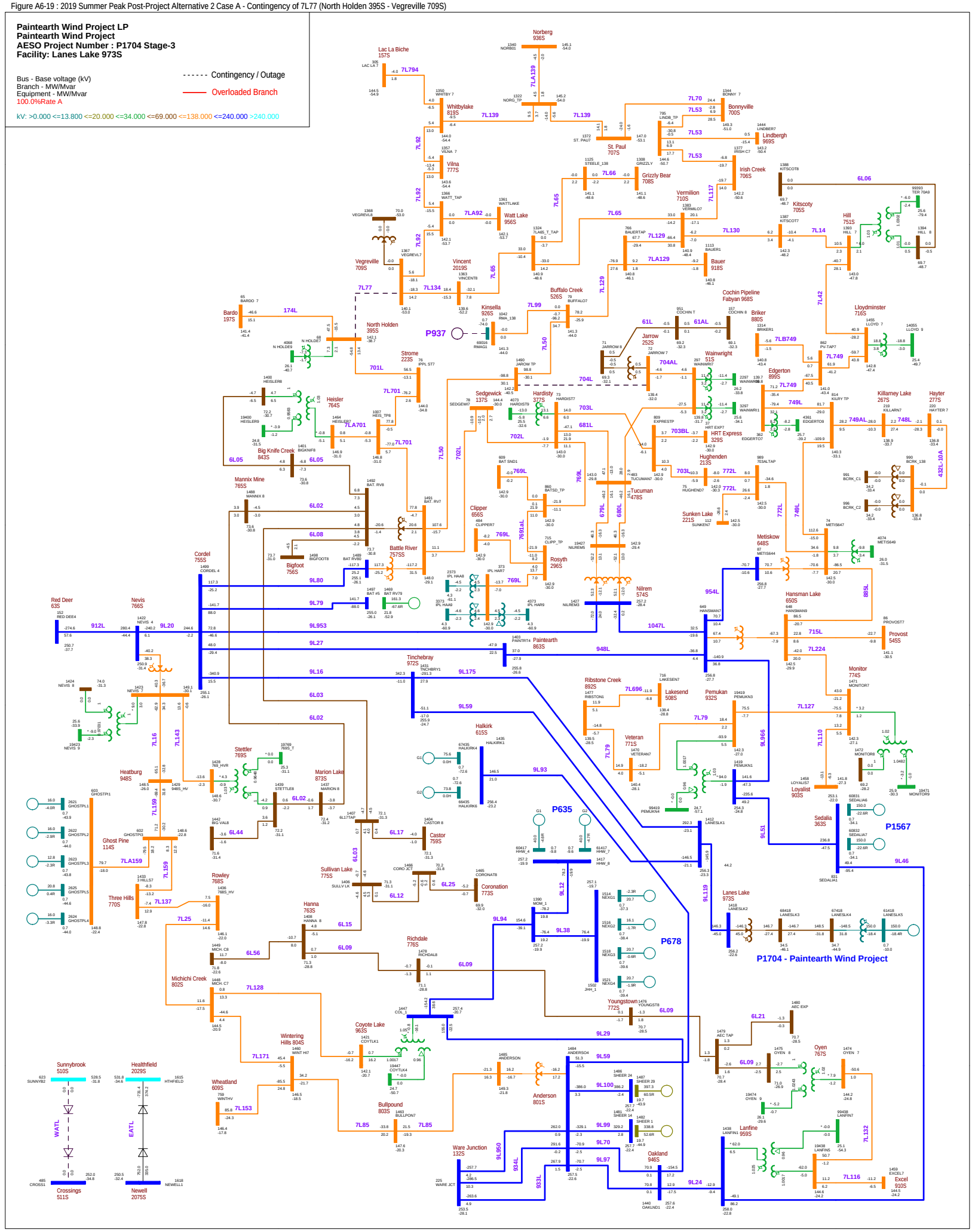

Figure A6-20 : 2019 Summer Peak Post-Project Alternative 2 Case A - Contingency of 899ST3A (Edgerton 899S Transformer T3A)

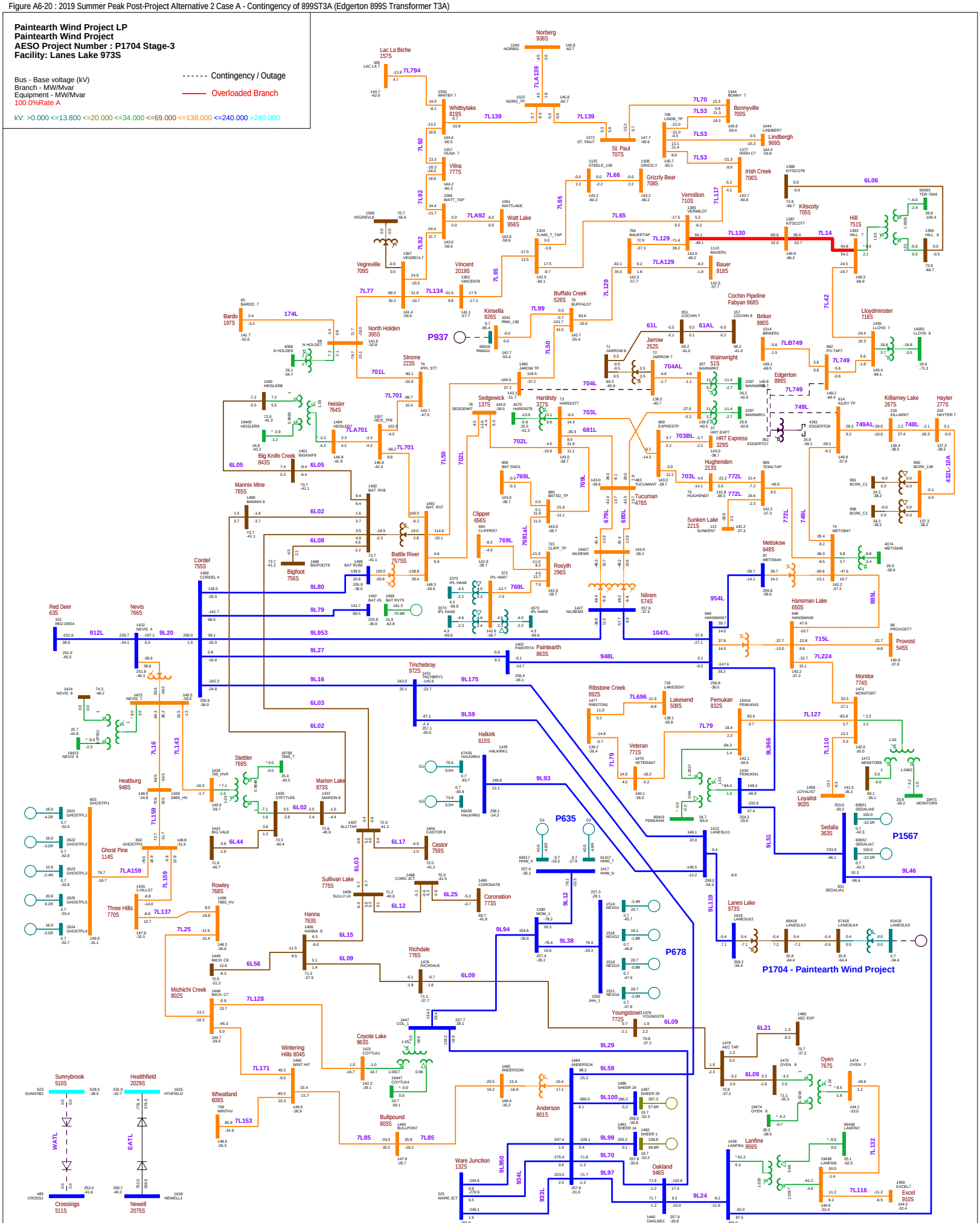

Figure A6-21 : 2019 Summer Peak Post-Project Alternative 2 Case A - Contingency of 912L\9L912 (Red Deer 63S - Nevis 766S)

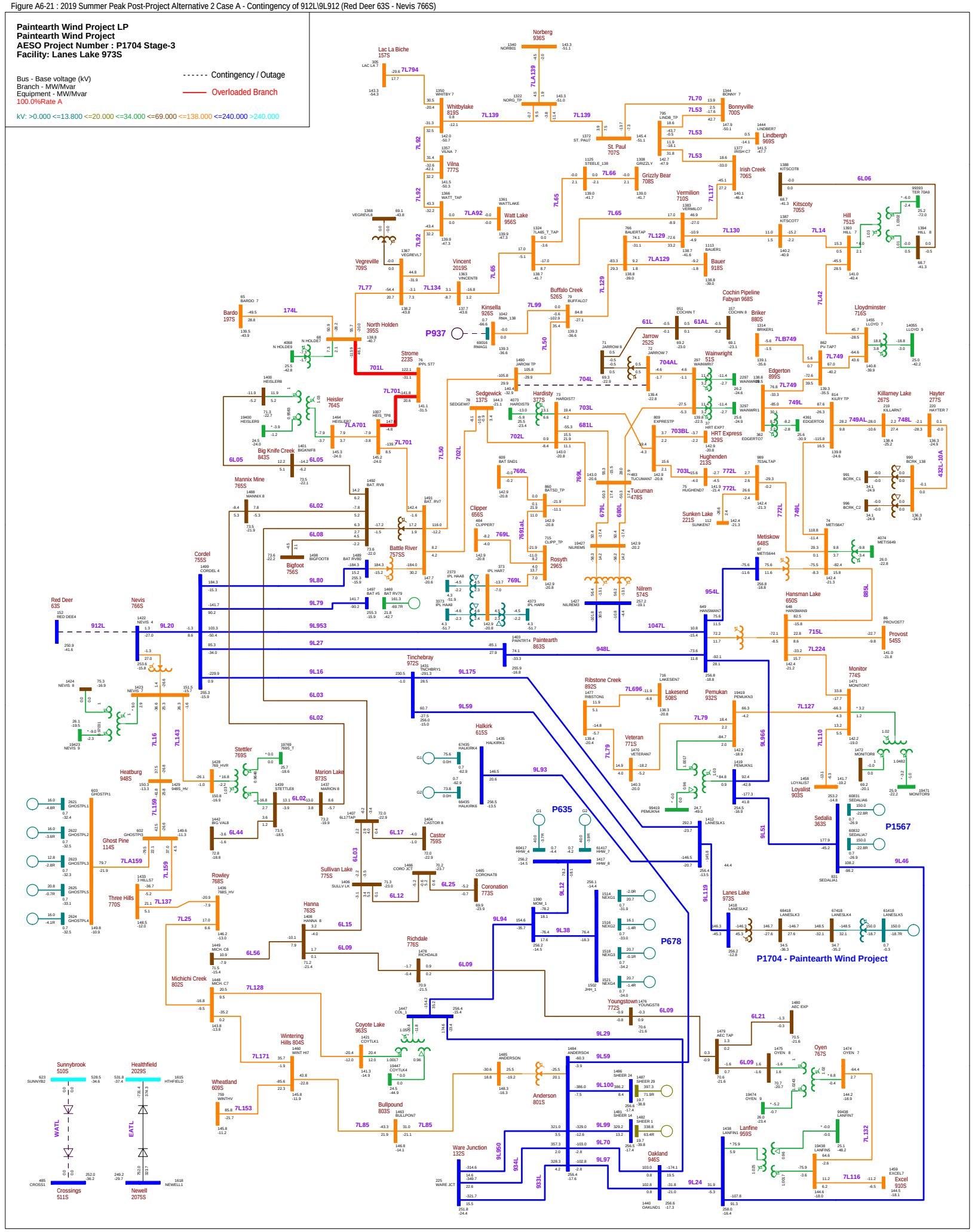

Figure A6-22 : 2019 Summer Peak Post-Project Alternative 2 Case A - Contingency of 9L20 (Nevis 766S - Cordel 755S)

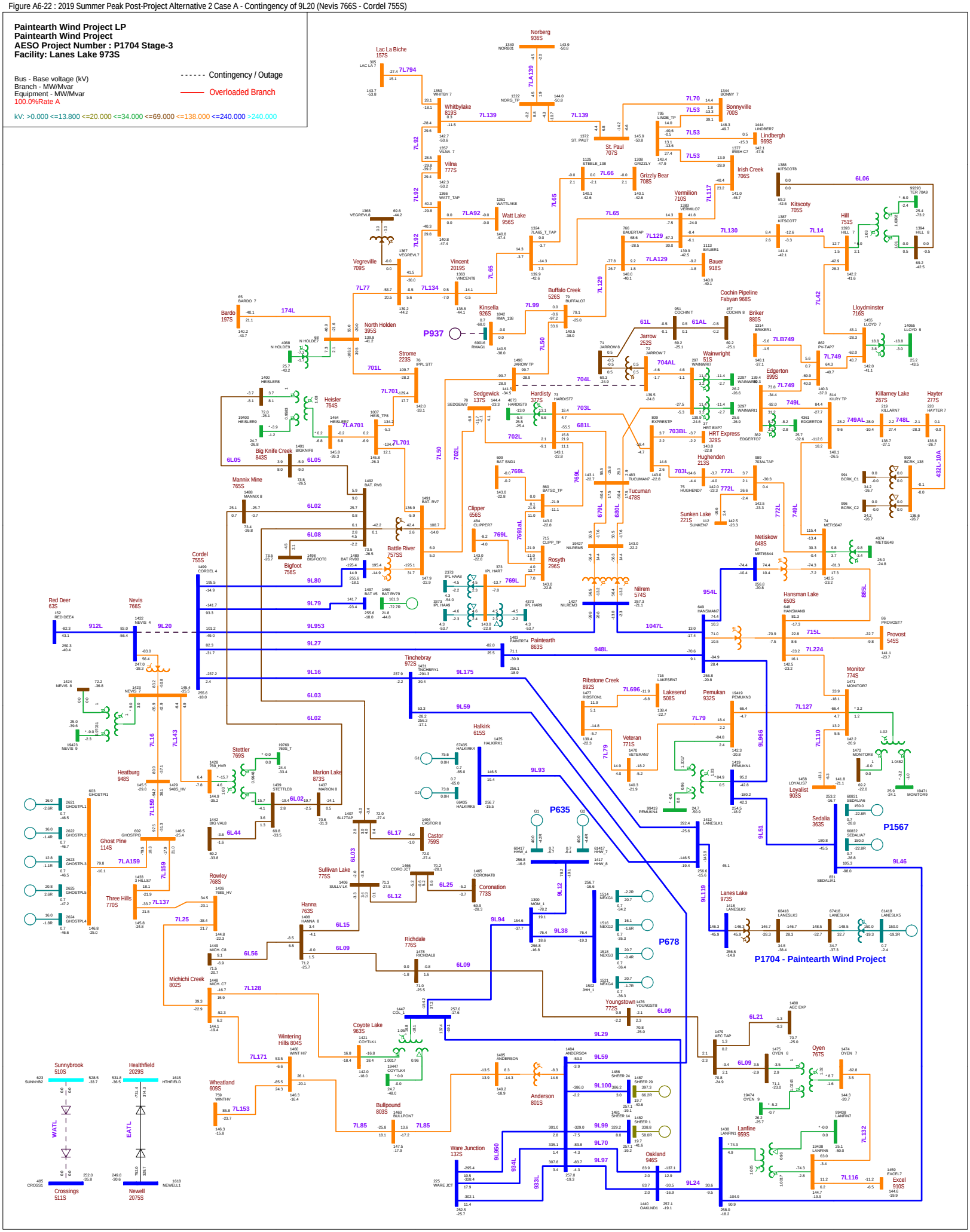

Figure A6-23 : 2019 Summer Peak Post-Project Alternative 2 Case A - Contingency of 9L29 (Oakland 946S - Coyote Lake 963S)

Paintearth Wind Project LP
Paintearth Wind Project
AESO Project Number : P1704 Stage-3
Facility: Lanes Lake 973S

Bus - Base voltage (kV)
Branch - MW/Mvar
Equipment - MW/Mvar
100.0%Rate A

Contingency / Outage
Overloaded Branch

kV: >0.000 <=13.800 <=20.000 <=34.000 <=69.000 <=138.000 <=240.000 >240.000

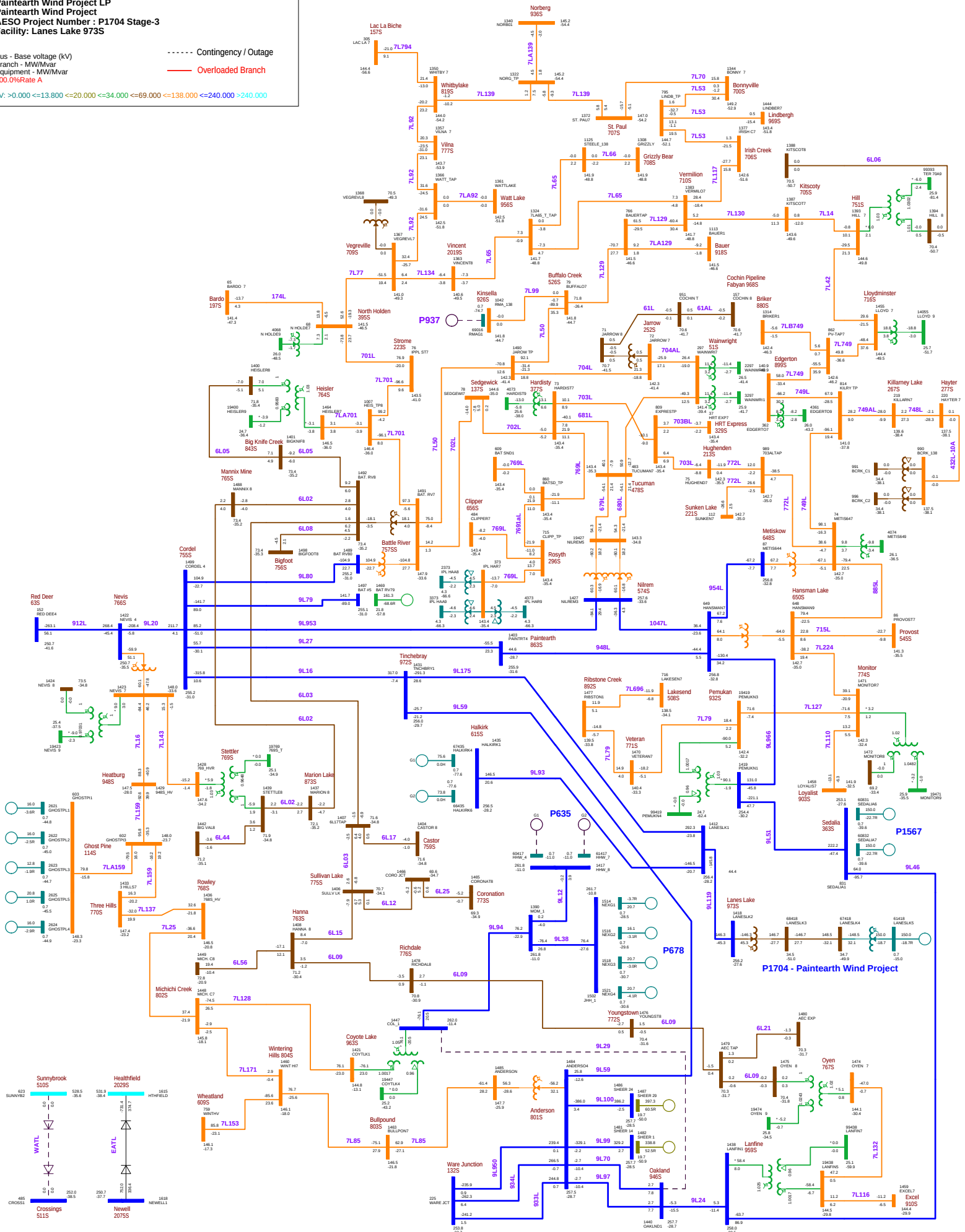

Figure A6-24 : 2019 Summer Peak Post-Project Alternative 2 Case A - Contingency of EATL (Newell 2075S - Heathfield 2029S)

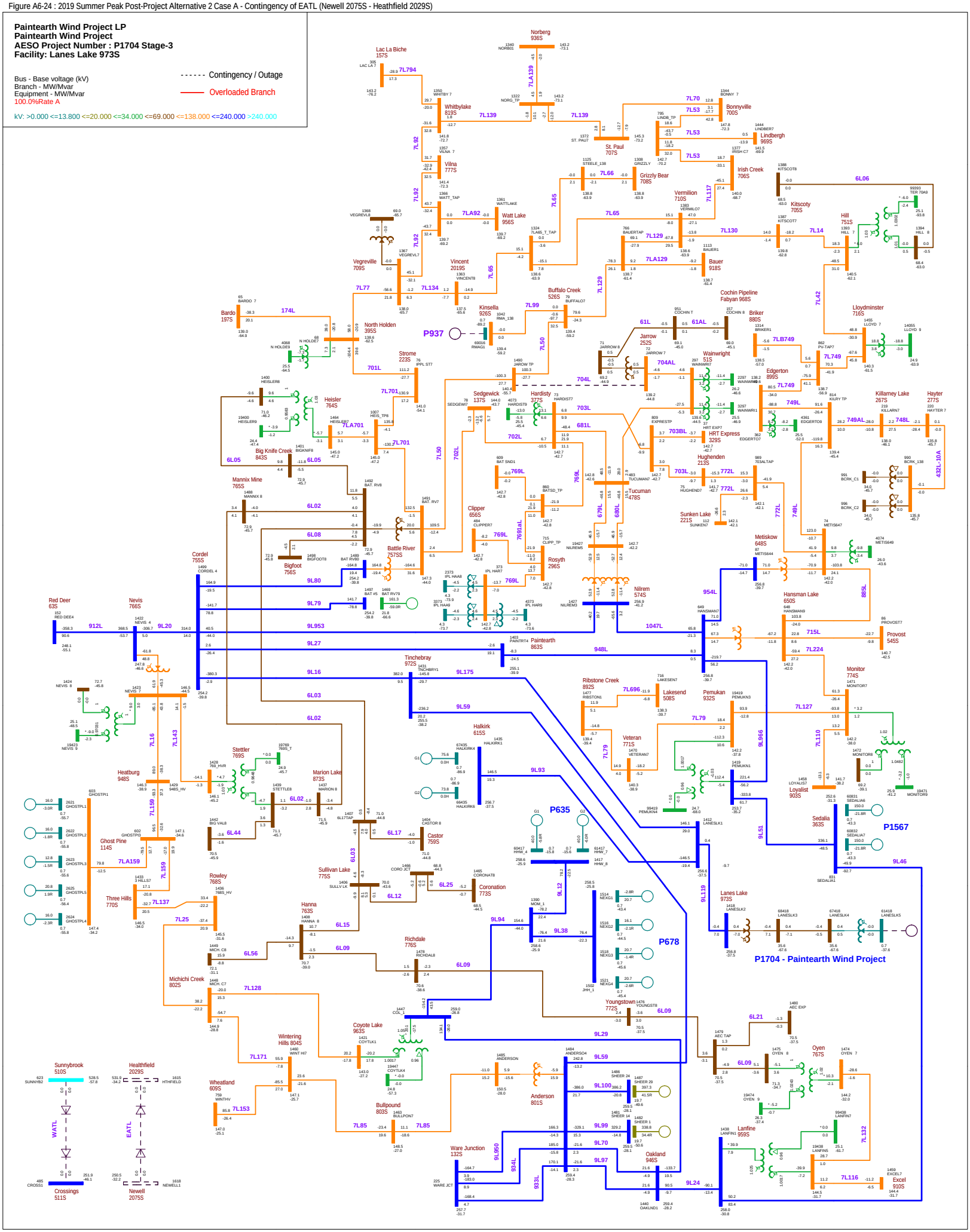

Figure A6-25 : 2019 Summer Peak Post-Project Alternative 2 Case B - Contingency of 296ST1 or 296ST2 (Rosyth 286S Transformer T1 or T2)

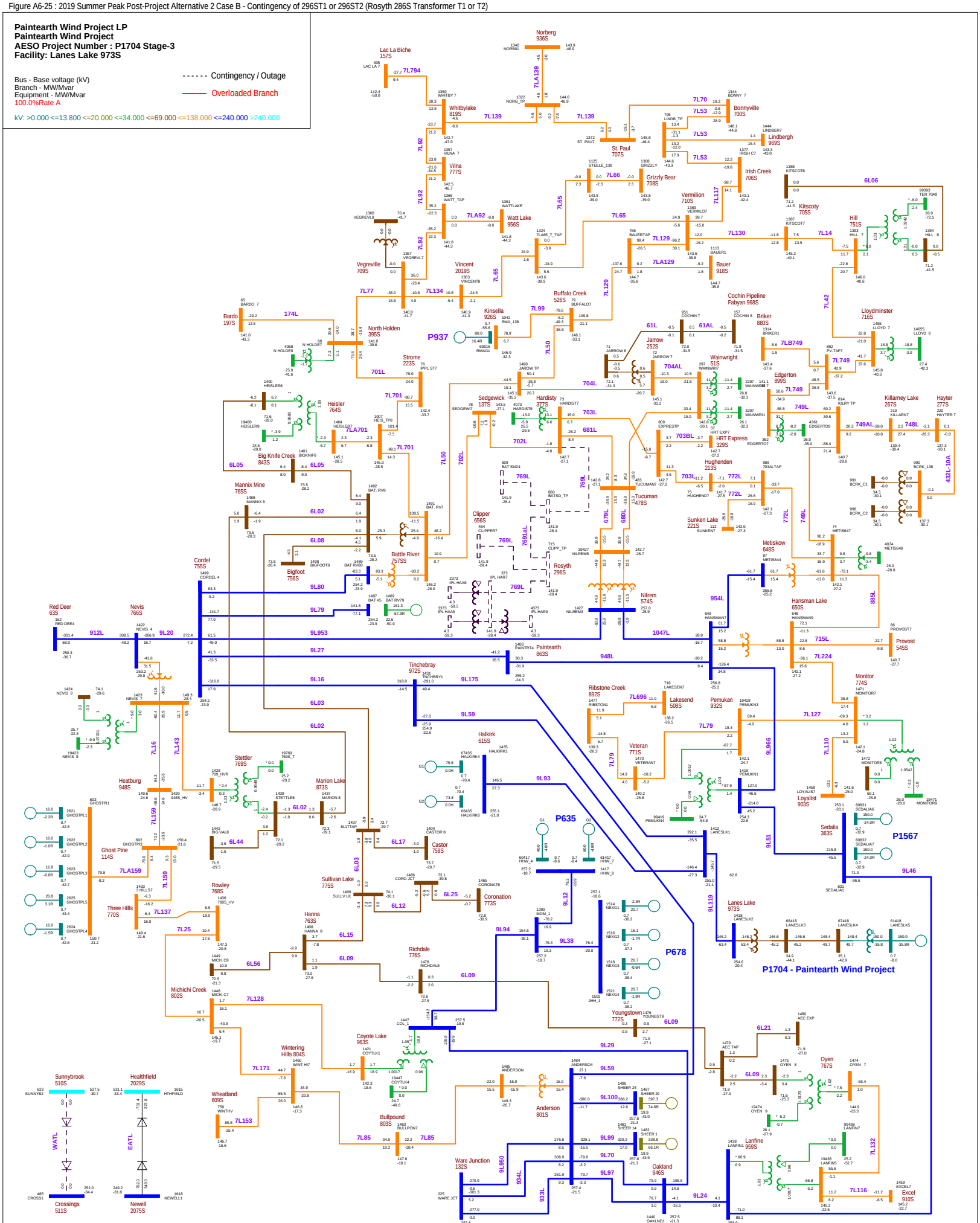

Figure A6-26 : 2019 Summer Peak Post-Project Alternative 2 Case B - Contingency of 377ST1 (Hardisty 377S Transformer T1)

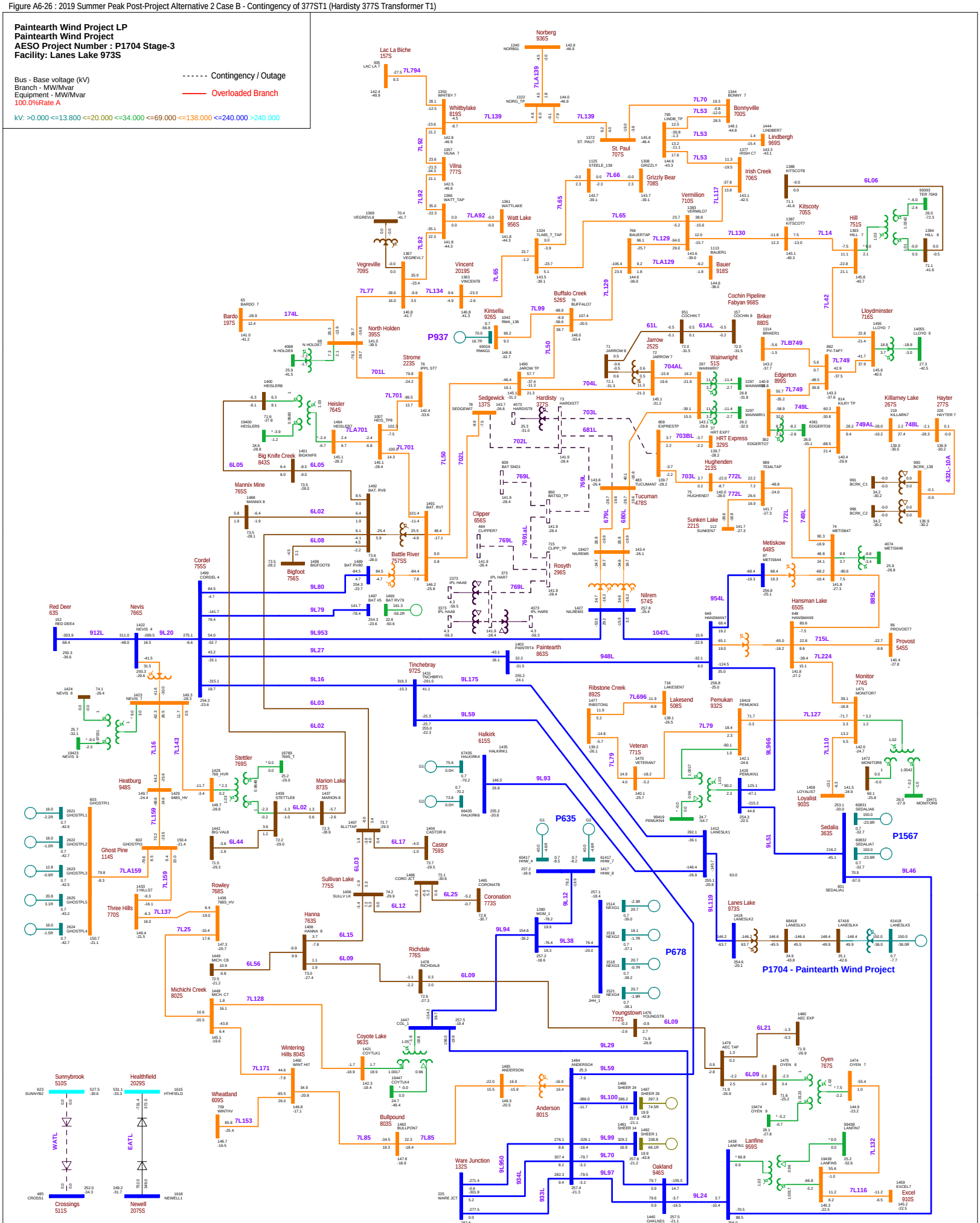

Figure A6-27 : 2019 Summer Peak Post-Project Alternative 2 Case B - Contingency of 395ST1 (North Holden 395S Transformer T1)

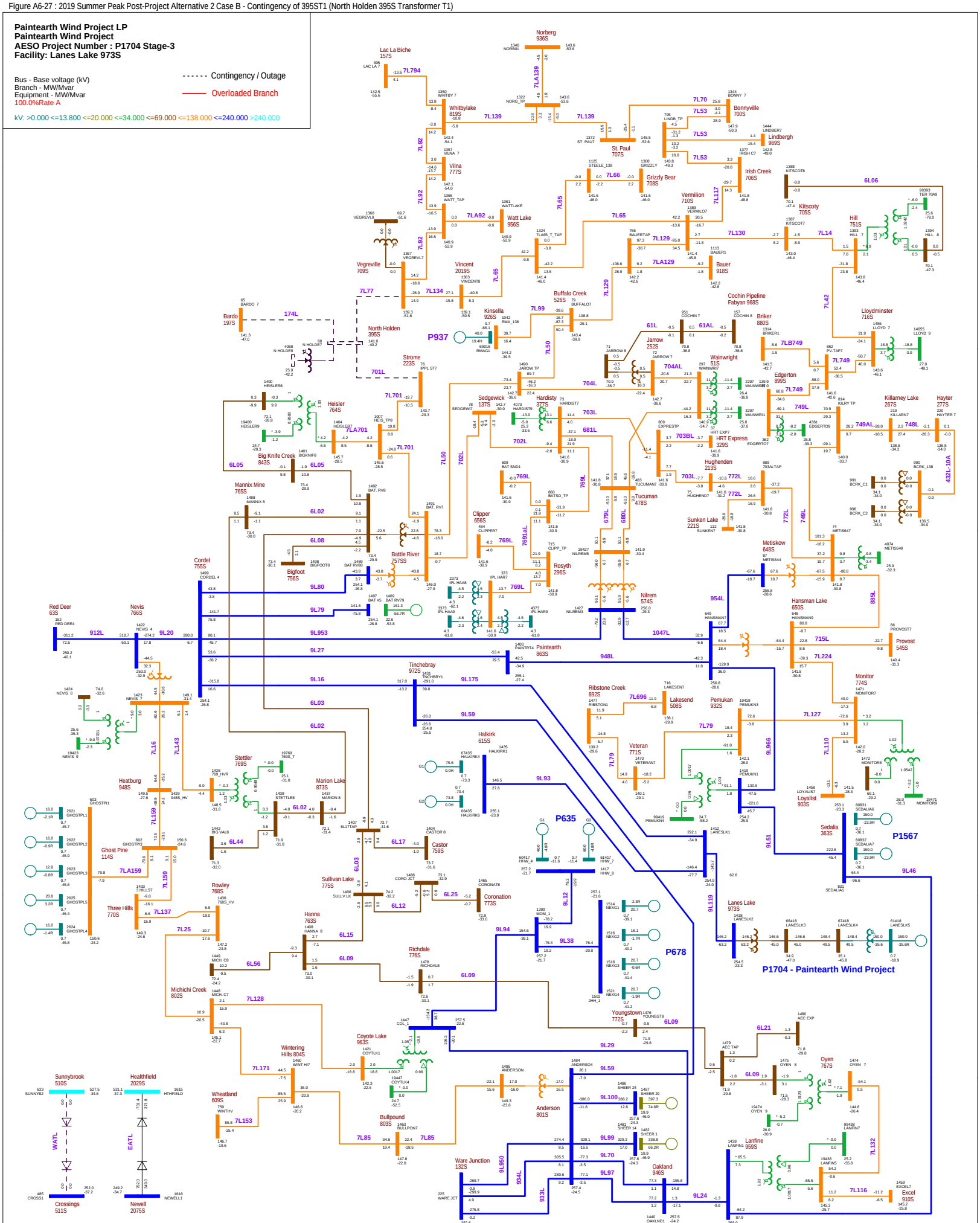
Paintearth Wind Project LP
Paintearth Wind Project
AESO Project Number : P1704 Stage-3
Facility: Lanes Lake 973S
Bus - Base voltage (kV)
Branch - MW/Mvar
Equipment - MW/Mvar
100.0%Rate A
kV: >0.000 <=13.800 <=20.000 <=34.000 <=69.000 <=138.000 <=240.000 >240.000
Contingency / Outage
Overloaded Branch
Norberg 936S
Lac La Biche 157S
Whitbylake 819S
Vilna 777S
Watt Lake 956S
Vegreville 709S
Vincent 2019S
Kinsella 926S
Buffalo Creek 526S
St. Paul 707S
Bonnyville 700S
Lindbergh 969S
Irish Creek 706S
Grizzly Bear 708S
Vermilion 710S
Bauer 918S
Kitscoty 705S
Hill 751S
Lloydminster 716S
Bardo 197S
North Holden 395S
P937
Strome 223S
Sedgewick 137S
Hardisty 377S
Jarrow 252S
Wainwright 51S
Edgerton 899S
Briker 880S
Cochin Pipeline Fabyan 968S
Heisler 764S
Big Knife Creek 843S
Killarney Lake 267S
Hayter 277S
Mannix 765S
Cordel 755S
Bigfoot 756S
Battle River 757SS
Clipper 656S
Rosyth 296S
Tucuman 478S
Sunken Lake 221S
Hughenden 213S
HRT Express 329S
Nilrem 574S
Metiskow 648S
Hansman Lake 650S
Provost 545S
Red Deer 63S
Nevis 766S
Paintearth 863S
Tinchebray 972S
Ribstone Creek 892S
Lakesend 508S
Pemukan 932S
Monitor 774S
Veteran 771S
Loyalist 903S
Sedalia 363S
Halkirk 615S
Heatburg 948S
Marion Lake 873S
Stettler 769S
Ghost Pine 114S
Three Hills 770S
Rowley 768S
Sullivan Lake 775S
Castor 759S
Coronation 773S
Hanna 763S
Richdale 776S
Michichi Creek 802S
Lanes Lake 973S
P1704 - Paintearth Wind Project
P635
P678
P1567
Youngstown 772S
Oyen 767S
Lanfine 959S
Excel 910S
Sunnybrook 510S
Healthfield 2029S
Crossings 511S
Newell 2075S
Wheatland 609S
Wintering Hills 804S
Coyote Lake 963S
Bullpound 803S
Anderson 801S
Ware Junction 132S
Oakland 946S
Wainwright 51S
Jarrow 252S
Strome 223S
Sedgewick 137S
Hardisty 377S
Vermilion 710S
Irish Creek 706S
Bonnyville 700S
Lloydminster 716S
Killarney Lake 267S
Hayter 277S
Metiskow 648S
Hansman Lake 650S
Provost 545S
Monitor 774S
Sedalia 363S
Loyalist 903S
Veteran 771S
Pemukan 932S
Lakesend 508S
Ribstone Creek 892S
Tinchebray 972S
Paintearth 863S
Halkirk 615S
Nilrem 574S
Tucuman 478S
Rosyth 296S
Clipper 656S
Battle River 757SS
Cordel 755S
Mannix 765S
Big Knife Creek 843S
Heisler 764S
Bardo 197S
North Holden 395S
Vegreville 709S
Vilna 777S
Whitbylake 819S
Lac La Biche 157S
Norberg 936S
Watt Lake 956S
Vincent 2019S
Kinsella 926S
Buffalo Creek 526S
St. Paul 707S
Bonnyville 700S
Lindbergh 969S
Irish Creek 706S
Grizzly Bear 708S
Vermilion 710S
Bauer 918S
Kitscoty 705S
Hill 751S
Lloydminster 716S
Cochin Pipeline Fabyan 968S
Briker 880S
Jarrow 252S
Wainwright 51S
Edgerton 899S
Killarney Lake 267S
Hayter 277S
Hughenden 213S
HRT Express 329S
Sunken Lake 221S
Tucuman 478S
Nilrem 574S
Metiskow 648S
Hansman Lake 650S
Provost 545S
Monitor 774S
Sedalia 363S
Loyalist 903S
Veteran 771S
Pemukan 932S
Lakesend 508S
Ribstone Creek 892S
Tinchebray 972S
Paintearth 863S
Halkirk 615S
Nilrem 574

Figure A6-28 : 2019 Summer Peak Post-Project Alternative 2 Case B - Contingency of 51ST3 or 51ST4 (Wainwright 51S Transformer T3 or T4)

Paintearth Wind Project LP
Paintearth Wind Project
AESO Project Number : P1704 Stage-3
Facility: Lanes Lake 973S

Bus - Base voltage (kV)
Branch - MW/Mvar
Equipment - MW/Mvar
100.0%Rate A

Contingency / Outage
Overloaded Branch

kV: >0.000 <=13.800 <=20.000 <=34.000 <=69.000 <=138.000 <=240.000 >240.000

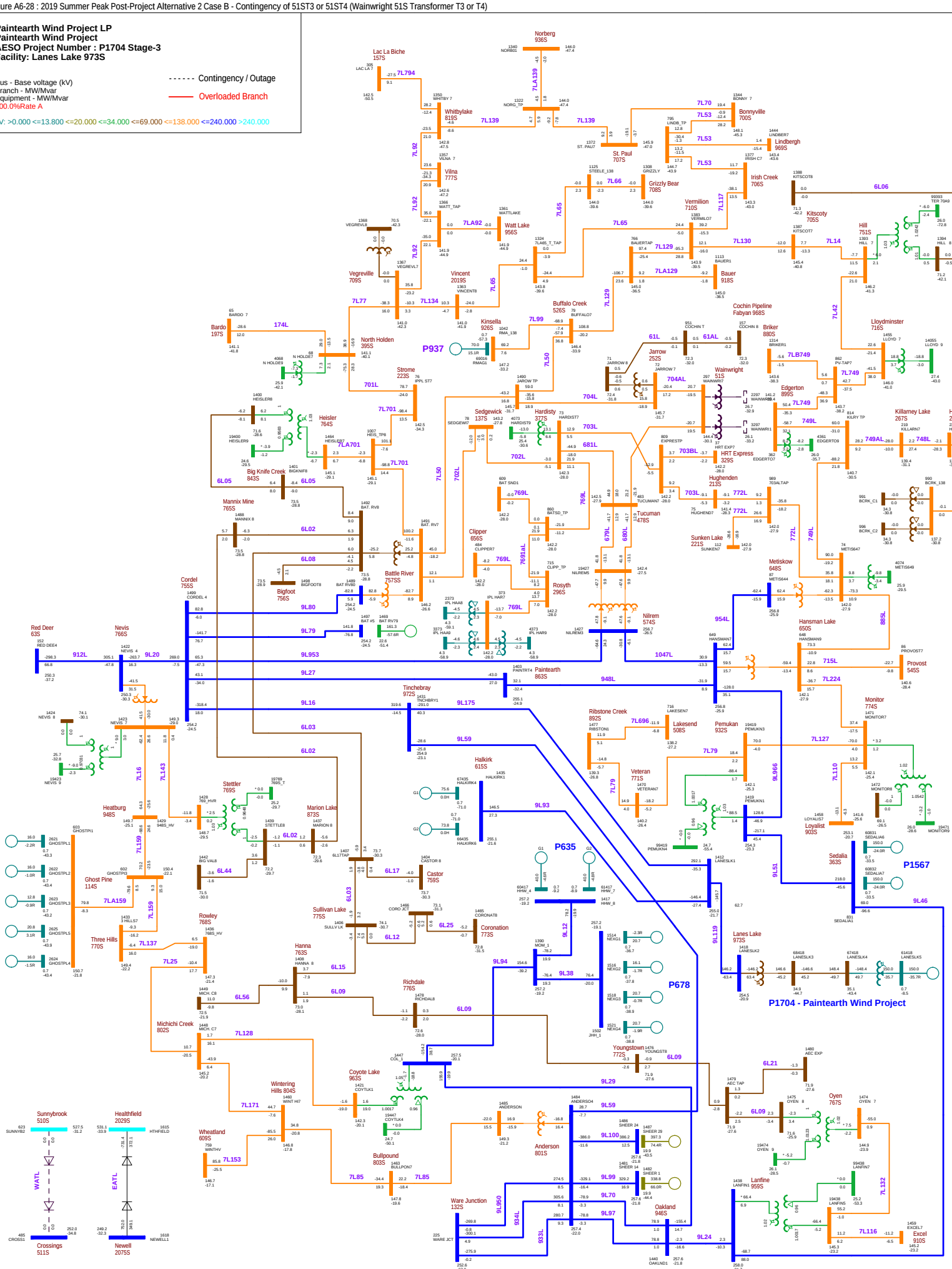
Norberg 936S
Lac La Biche 157S
Whitbylake 819S
Vilna 777S
Watt Lake 956S
Vegreville 709S
Vincent 2019S
Bardo 197S
North Holden 395S
Strome 223S
Kinsella 926S
Buffalo Creek 526S
Sedgewick 137S
Hardisty 377S
Heisler 764S
Big Knife Creek 843S
Mannix Mine 765S
Bigfoot 756S
Battle River 757SS
Clipper 656S
Rosyth 296S
Tucumar 478S
Sunken Lake 221S
Hughenden 213S
HRT Express 329S
Jarrow 252S
Wainwright 51S
Vermilion 710S
St. Paul 707S
Grizzly Bear 708S
Bonnyville 700S
Lindbergh 969S
Irish Creek 706S
Kitscoty 705S
Hill 751S
Edgerton 899S
Briker 880S
Cochin Pipeline Fabyan 968S
Lloydminster 716S
Killarney Lake 267S
Hayter 277S
Provost 545S
Metiskow 648S
Hansman Lake 650S
Monitor 774S
Lakesend 508S
Pemukan 932S
Ribstone Creek 892S
Veteran 771S
Loyalist 903S
Sedalia 363S
Lanes Lake 973S
Paintearth 863S
Nilrem 574S
Cordel 755S
Nevis 766S
Red Deer 63S
Tinchebray 972S
Halkirk 615S
Stettler 769S
Heatburg 948S
Marion Lake 873S
Ghost Pine 114S
Three Hills 770S
Rowley 768S
Michichi Creek 802S
Hanna 763S
Sullivan Lake 775S
Richdale 776S
Castor 759S
Coronation 773S
Youngstown 772S
Oyen 767S
Anderson 801S
Ware Junction 132S
Oakland 946S
Lanfine 959S
Excel 910S
Coyote Lake 963S
Wintering Hills 804S
Wheatland 609S
Bullpound 803S
Sunnybrook 510S
Healthfield 2029S
Crossings 511S
Newell 2075S
P937
P635
P678
P1567
P1704 - Paintearth Wind Project
174L
912L
1047L
954L
885L
715L
948L
1091L
1092L
1093L
1094L
1095L
1096L
1097L
1098L
1099L
1100L
1101L
1102L
1103L
1104L
1105L
1106L
1107L
1108L
1109L
1110L
1111L
1112L
1113L
1114L
1115L
1116L
1117L
1118L
1119L
1120L
1121L
1122L
1123L
1124L
1125L
1126L
1127L
1128L
1129L
1130L
1131L
1132L
1133L
1134L
1135L
1136L
1137L
1138L
1139L
1140L
1141L
1142L
1143L
1144L
1145L
1146L
1147L
1148L
1149L
1150L
1151L
1152L
1153L
1154L
1155L
1156L
1157L
1158L
1159L
1160L
1161L
1162L
1163L
1164L
1165L
1166L
1167L
1168L
1169L
1170L
1171L
1172L
1173L
1174L
1175L
1176L
1177L
1178L
1179L
1180L
1181L
1182L
1183L
1184L
1185L
1186L
1187L
1188L
1189L
1190L
1191L
1192L
1193L
1194L
1195L
1196L
1197L
1198L
1199L
1200L
1201L
1202L
1203L
1204L
1205L
1206L
1207L
1208L
1209L
1210L
1211L
1212L
1213L
1214L
1215L
1216L
1217L
1218L
1219L
1220L
1221L
1222L
1223L
1224L
1225L
1226L
1227L
1228L
1229L
1230L
1231L
1232L
1233L
1234L
1235L
1236L
1237L
1238L
1239L
1240L
1241L
1242L
1243L
1244L
1245L
1246L
1247L
1248L
1249L
1250L
1251L
1252L
1253L
1254L
1255L
1256L
1257L
1258L
1259L
1260L
1261L
1262L
1263L
1264L
1265L
1266L
1267L
1268L
1269L
1270L
1271L
1272L
1273L
1274L
1275L
1276L
1277L
1278L
1279L
1280L
1281L
1282L
1283L
1284L
1285L
1286L
1287L
1288L
1289L
1290L
1291L
1292L
1293L
1294L
1295L
1296L
1297L
1298L
1299L
1300L
1301L
1302L
1303L
1304L
1305L
1306L
1307L
1308L
1309L
1310L
1311L
1312L
1313L
1314L
1315L
1316L
1317L
1318L
1319L
1320L
1321L
1322L
1323L
1324L
1325L
1326L
1327L
1328L
1329L
1330L
1331L
1332L
1333L
1334L
1335L
1336L
1337L
1338L
1339L
1340L
1341L
1342L
1343L
1344L
1345L
1346L
1347L
1348L
1349L
1350L
1351L
1352L
1353L
1354L
1355L
1356L
1357L
1358L
1359L
1360L
1361L
1362L
1363L
1364L
1365L
1366L
1367L
1368L
1369L
1370L
1371L
1372L
1373L
1374L
1375L
1376L
1377L
1378L
1379L
1380L
1381L
1382L
1383L
1384L
1385L
1386L
1387L
1388L
1389L
1390L
1391L
1392L
1393L
1394L
1395L
1396L
1397L
1398L
1399L
1400L
1401L
1402L
1403L
1404L
1405L
1406L
1407L
1408L
1409L
1410L
1411L
1412L
1413L
1414L
1415L
1416L
1417L
1418L
1419L
1420L
1421L
1422L
1423L
1424L
1425L
1426L
1427L
1428L
1429L
1430L
1431L
1432L
1433L
1434L
1435L
1436L
1437L
1438L
1439L
1440L
1441L
1442L
1443L
1444L
1445L
1446L
1447L
1448L
1449L
1450L
1451L
1452L
1453L
1454L
1455L
1456L
1457L
1458L
1459L
1460L
1461L
1462L
1463L
1464L
1465L
1466L
1467L
1468L
1469L
1470L
1471L
1472L
1473L
1474L
1475L
1476L
1477L
1478L
1479L
1480L
1481L
1482L
1483L
1484L
1485L
1486L
1487L
1488L
1489L
1490L
1491L
1492L
1493L
1494L
1495L
1496L
1497L
1498L
1499L
1500L
1501L
1502L
1503L
1504L
1505L
1506L
1507L
1508L
1509L
1510L
1511L
1512L
1513L
1514L
1515L
1516L
1517L
1518L
1519L
1520L
1521L
1522L
1523L
1524L
1525L
1526L
1527L
1528L
1529L
1530L
1531L
1532L
1533L
1534L
1535L
1536L
1537L
1538L
1539L
1540L
1541L
1542L
1543L
1544L
1545L
1546L
1547L
1548L
1549L
1550L
1551L
1552L
1553L
1554L
1555L
1556L
1557L
1558L
1559L
1560L
1561L
1562L
1563L
1564L
1565L
1566L
1567L
1568L
1569L
1570L
1571L
1572L
1573L
1574L
1575L
1576L
1577L
1578L
1579L
1580L
1581L
1582L
1583L
1584L
1585L
1586L
1587L
1588L
1589L
1590L
1591L
1592L
1593L
1594L
1595L
1596L
1597L
1598L
1599L
1600L
1601L
1602L
1603L
1604L
1605L
1606L
1607L
1608L
1609L
1610L
1611L
1612L
1613L
1614L
1615L
1616L
1617L
1618L
1619L
1620L
1621L
1622L
1623L
1624L
1625L
1626L
1627L
1628L
1629L
1630L
1631L
1632L
1633L
1634L
1635L
1636L
1637L
1638L
1639L
1640L
1641L
1642L
1643L
1644L
1645L
1646L
1647L
1648L
1649L
1650L
1651L
1652L
1653L
1654L
1655L
1656L
1657L
1658L
1659L
1660L
1661L
1662L
1663L
1664L
1665L
1666L
1667L
1668L
1669L
1670L
1671L
1672L
1673L
1674L
1675L
1676L
1677L
1678L
1679L
1680L
1681L
1682L
1683L
1684L
1685L
1686L
1687L
1688L
1689L
1690L
1691L
1692L
1693L
1694L
1695L
1696L
1697L
1698L
1699L
1700L
1701L
1702L
1703L
1704L
1705L
1706L
1707L
1708L
1709L
1710L
1711L
1712L
1713L
1714L
1715L
1716L
1717L
1718L
1719L
1720L
1721L
1722L
1723L
1724L
1725L
1726L
1727L
1728L
1729L
1730L
1731L
1732L
1733L
1734L
1735L
1736L
1737L
1738L
1739L
1740L
1741L
1742L
1743L
1744L
1745L
1746L
1747L
1748L
1749L
1750L
1751L
1752L
1753L
1754L
1755L
1756L
1757L
1758L
1759L
1760L
1761L
1762L
1763L
1764L
1765L
1766L
1767L
1768L
1769L
1770L
1771L
1772L
1773L
1774L
1775L
1776L
1777L
1778L
1779L
1780L
1781L
1782L
1783L
1784L
1785L
1786L
1787L
1788L
1789L
1790L
1791L
1792L
1793L
1794L
1795L
1796L
1797L
1798L
1799L
1800L
1801L
1802L
1803L
1804L
1805L
1806L
1807L
1808L
1809L
1810L
1811L
1812L
1813L
1814L
1815L
1816L
1817L
1818L
1819L
1820L
1821L
1822L
1823L
1824L
1825L
1826L
1827L
1828L
1829L
1830L
1831L
1832L
1833L
1834L
1835L
1836L
1837L
1838L
1839L
1840L
1841L
1842L
1843L
1844L
1845L
1846L
1847L
1848L
1849L
1850L
1851L
1852L
1853L
1854L
1855L
1856L
1857L
1858L
1859L
1860L
1861L
1862L
1863L
1864L
1865L
1866L
1867L
1868L
1869L
1870L
1871L
1872L
1873L
1874L
1875L
1876L
1877L
1878L
1879L
1880L
1881L
1882L
1883L
1884L
1885L
1886L
1887L
1888L
1889L
1890L
1891L
1892L
1893L
1894L
1895L
1896L
1897L
1898L
1899L
1900L
1901L
1902L
1903L
1904L
1905L
1906L
1907L
1908L
1909L
1910L
1911L
1912L
1913L
1914L
1915L
1916L
1917L
1918L
1919L
1920L
1921L
1922L
1923L
1924L
1925L
1926L
1927L
1928L
1929L
1930L
1931L
1932L
1933L
1934L
1935L
1936L
1937L
1938L
1939L
1940L
1941L
1942L
1943L
1944L
1945L
1946L
1947L
1948L
1949L
1950L
1951L
1952L
1953L
1954L
1955L
1956L
1957L
1958L
1959L
1960L
1961L
1962L
1963L
1964L
1965L
1966L
1967L
1968L
1969L
1970L
1971L
1972L
1973L
1974L
1975L
1976L
1977L
1978L
1979L
1980L
1981L
1982L
1983L
1984L
1985L
1986L
1987L
1988L
1989L
1990L
1991L
1992L
1993L
1994L
1995L
1996L
1997L
1998L
1999L
2000L
2001L
2002L
2003L
2004L
2005L
2006L
2007L
2008L
2009L
2010L
2011L
2012L
2013L
2014L
2015L
2016L
2017L
2018L
2019L
2020L
2021L
2022L
2023L
2024L
2025L
2026L
2027L
2028L
2029L
2030L
2031L
2032L
2033L
2034L
2035L
2036L
2037L
2038L
2039L
2040L
2041L
2042L
2043L
2044L
2045L
2046L
2047L
2048L
2049L
2050L
2051L
2052L
2053L
2054L
2055L
2056L
2057L
2058L
2059L
2060L
2061L
2062L
2063L
2064L
2065L
2066L
2067L
2068L
2069L
2070L
2071L
2072L
2073L
2074L
2075L
2076L
2077L
2078L
2079L
2080L
2081L
2082L
2083L
2084L
2085L
2086L
2087L
2088L
2089L
2090L
2091L
2092L
2093L
2094L
2095L
2096L
2097L
2098L
2099L
2100L
2101L
2102L
2103L
2104L
2105L
2106L
2107L
2108L
2109L
2110L
2111L
2112L
2113L
2114L
2115L
2116L
2117L
2118L
2119L
2120L
2121L
2122L
2123L
2124L
2125L
2126L
2127L
2128L
2129L
2130L
2131L
2132L
2133L
2134L
2135L
2136L
2137L
2138L
2139L
2140L
2141L
2142L
2143L
2144L
2145L
2146L
2147L
2148L
2149L
2150L
2151L
2152L
2153L
2154L
2155L
2156L
2157L
2158L
2159L
2160L
2161L
2162L
2163L
2164L
2165L
2166L
2167L
2168L
2169L
2170L
2171L
2172L
2173L
2174L
2175L
2176L
2177L
2178L
2179L
2180L
2181L
2182L
2183L
2184L
2185L
2186L
2187L
2188L
2189L
2190L
2191L
2192L
2193L
2194L
2195L
2196L
2197L
2198L
2199L
2200L
2201L
2202L
2203L
2204L
2205L
2206L
2207L
2208L
2209L
2210L
2211L
2212L
2213L
2214L
2215L
2216L
2217L
2218L
2219L
2220L
2221L
2222L
2223L
2224L
2225L
2226L
2227L
2228L
2229L
2230L
2231L
2232L
2233L
2234L
2235L
2236L
2237L
2238L
2239L
2240L
2241L
2242L
2243L
2244L
2245L
2246L
2247L
2248L
2249L
2250L
2251L
2252L
2253L
2254L
2255L
2256L
2257L
2258L
2259L
2260L
2261L
2262L
2263L
2264L
2265L
2266L
2267L
2268L
2269L
2270L
2271L
2272L
2273L
2274L
2275L
2276L
2277L
2278L
2279L
2280L
2281L
2282L
2283L
2284L
2285L
2286L
2287L
2288L
2289L
2290L
2291L
2292L
2293L
2294L
2295L
2296L
2297L
2298L
2299L
2300L
2301L
2302L
2303L
2304L
2305L
2306L
2307L
2308L
2309L
2310L
2311L
2312L
2313L
2314L
2315L
2316L
2317L
2318L
2319L
2320L
2321L
2322L
2323L
2324L
2325L
2326L
2327L
2328L
2329L
2330L
2331L
2332L
2333L
2334L
2335L
2336L
2337L
2338L
2339L
2340L
2341L
2342L
2343L
2344L
2345L
2346L
2347L
2348L
2349L
2350L
2351L
2352L
2353L
2354L
2355L
2356L
2357L
2358L
2359L
2360L
2361L
2362L
2363L
2364L
2365L
2366L
2367L
2368L
2369L
2370L
2371L
2372L
2373L
2374L
2375L
2376L
2377L
2378L
2379L
2380L
2381L
2382L
2383L
2384L
2385L
2386L
2387L
2388L
2389L
2390L
2391L
2392L
2393L
2394L
2395L
2396L
2397L
2398L
2399L
2400L
2401L
2402L
2403L
2404L
2405L
2406L
2407L
2408L
2409L
2410L
2411L
2412L
2413L
2414L
2415L
2416L
2417L
2418L
2419L
2420L
2421L
2422L
2423L
2424L
2425L
2426L
2427L
2428L
2429L
2430L
2431L
2432L
2433L
2434L
2435L
2436L
2437L
2438L
2439L
2440L
2441L
2442L
2443L
2444L
2445L
2446L
2447L
2448L
2449L
2450L
2451L
2452L
2453L
2454L
2455L
2456L
2457L
2458L
2459L
2460L
2461L
2462L
2463L
2464L
2465L
2466L
2467L
2468L
2469L
2470L
2471L
2472L
2473L
2474L
2475L
2476L
2477L
2478L
2479L
2480L
2481L
2482L
2483L
2484L
2485L
2486L
2487L
2488L
2489L
2490L
2491L
2492L
2493L
2494L
2495L
2496L
2497L
2498L
2499L
2500L
2501L
2502L
2503L
2504L
2505L
2506L
2507L
2508L
2509L
2510L
2511L
2512L
2513L
2514L
2515L
2516L
2517L
2518L
2519L
2520L
2521L
2522L
2523L
2524L
2525L
2526L
2527L
2528L
2529L
2530L
2531L
2532L
2533L
2534L
2535L
2536L
2537L
2538L
2539L
2540L
2541L
2542L
2543L
2544L
2545L
2546L
2547L
2548L
2549L
2550L
2551L
2552L
2553L
2554L
2555L
2556L
2557L
2558L
2559L
2560L
2561L
2562L
2563L
2564L
2565L
2566L
2567L
2568L
2569L
2570L
2571L
2572L
2573L
2574L
2575L
2576L
2577L
2578L
2579L
2580L
2581L
2582L
2583L
2584L
2585L
2586L
2587L
2588L
2589L
2590L
2591L
2592L
2593L
2594L
2595L
2596L
2597L
2598L
2599L
2600L
2601L
2602L
2603L
2604L
2605L
2606L
2607L
2608L
2609L
2610L
2611L
2612L
2613L
2614L
2615L
2616L
2617L
2618L
2619L
2620L
2621L
2622L
2623L
2624L
2625L
2626L
2627L
2628L
2629L
2630L
2631L
2632L
2633L
2634L
2635L
2636L
2637L
2638L
2639L
2640L
2641L
2642L
2643L
2644L
2645L
2646L
2647L
2648L
2649L
2650L
2651L
2652L
2653L
2654L
2655L
2656L
2657L
2658L
2659L
2660L
2661L
2662L
2663L
2664L
2665L
2666L
2667L
2668L
2669L
2670L
2671L
2672L
2673L
2674L
2675L
2676L
2677L
2678L
2679L
2680L
2681L
2682L
2683L
2684L
2685L
2686L
2687L
2688L
2689L
2690L
2691L
2692L
2693L
2694L
2695L
2696L
2697L
2698L
2699L
2700L
2701L
2702L
2703L
2704L
2705L
2706L
2707L
2708L
2709L
2710L
2711L
2712L
2713L
2714L
2715L
2716L
2717L
2718L
2719L
2720L
2721L
2722L
2723L
2724L
2725L
2726L
2727L
2728L
2729L
2730L
2731L
2732L
2733L
2734L
2735L
2736L
2737L
2738L
2739L
2740L
2741L
2742L
2743L
2744L
2745L
2746L
2747L
2748L
2749L
2750L
2751L
2752L
2753L
2754L
2755L
2756L
2757L
2758L
2759L
2760L
2761L
2762L
2763L
2764L
2765L
2766L
2767L
2768L
2769L
2770L
2771L
2772L
2773L
2774L
2775L
2776L
2777L
2778L
2779L
2780L
2781L
2782L
2783L
2784L
2785L
2786L
2787L
2788L
2789L
2790L
2791L
2792L
2793L
2794L
2795L
2796L
2797L
2798L
2799L
2800L
2801L
2802L
2803L
2804L
2805L
2806L
2807L
2808L
2809L
2810L
2811L
2812L
2813L
2814L
2815L
2816L
2817L
2818L
2819L
2820L
2821L
2822L
2823L
2824L
2825L
2826L
2827L
2828L
2829L
2830L
2831L
2832L
2833L
2834L
2835L
2836L
2837L
2838L
2839L
2840L
2841L
2842L
2843L
2844L
2845L
2846L
2847L
2848L
2849L
2850L
2851L
2852L
2853L
2854L
2855L
2856L
2857L
2858L
2859L
2860L
2861L
2862L
2863L
2864L
2865L
2866L
2867L
2868L
2869L
2870L
2871L
2872L
2873L
2874L
2875L
2876L
2877L
2878L
2879L
2880L
2881L
2882L
2883L
2884L
2885L
2886L
2887L
2888L
2889L
2890L
2891L
2892L
2893L
2894L
2895L
2896L
2897L
2898L
2899L
2900L
2901L
2902L
2903L
2904L
2905L
2906L
2907L
2908L
2909L
2910L
2911L
2912L
2913L
2914L
2915L
2916L
2917L
2918L
2919L
2920L
2921L
2922L
2923L
2924L
2925L
2926L
2927L
2928L
2929L
2930L
2931L
2932L
2933L
2934L
2935L
2936L
2937L
2938L
2939L
2940L
2941L
2942L
2943L
2944L
2945L
2946L
2947L
2948L
2949L
2950L
2951L
2952L
2953L
2954L
2955L
2956L
2957L
2958L
2959L
2960L
2961L
2962L
2963L
2964L
2965L
2966L
2967L
2968L
2969L
2970L
2971L
2972L
2973L
2974L
2975L
2976L
2977L
2978L
2979L
2980L
2981L
2982L
2983L
2984L
2985L
2986L
2987L
2988L
2989L
2990L
2991L
2992L
2993L
2994L
2995L
2996L
2997L
2998L
2999L
3000L
3001L
3002L
3003L
3004L
3005L
3006L
3007L
3008L
3009L
3010L
3011L
3012L
3013L
3014L
3015L
3016L
3017L
3018L
3019L
3020L
3021L
3022L
3023L
3024L
3025L
3026L
3027L
3028L
3029L
3030L
3031L
3032L
3033L
3034L
3035L
3036L
3037L
3038L
3039L
3040L
3041L
3042L
3043L
3044L
3045L
3046L
3047L
3048L
3049L
3050L
3051L
3052L
3053L
3054L
3055L
3056L
3057L
3058L
3059L
3060L
3061L
3062L
3063L
3064L
3065L
3066L
3067L
3068L
3069L
3070L
3071L
3072L
3073L
3074L
3075L
3076L
3077L
3078L
3079L
3080L
3081L
3082L
3083L
3084L
3085L
3086L
3087L
3088L
3089L
3090L
3091L
3092L
3093L
3094L
3095L
3096L
3097L
3098L
3099L
3100L
3101L
3102L
3103L
3104L
3105L
3106L
3107L
3108L
3109L
3110L
3111L
3112L
3113L
3114L
3115L
3116L
3117L
3118L
3119L
3120L
3121L
3122L
3123L
3124L
3125L
3126L
3127L
3128L
3129L
3130L
3131L
3132L
3133L
3134L
3135L
3136L
3137L
3138L
3139L
3140L
3141L
3142L
3143L
3144L
3145L
3146L
3147L
3148L
3149L
3150L
3151L
3152L
3153L
3154L
3155L
3156L
3157L
3158L
3159L
3160L
3161L
3162L
3163L
3164L
3165L
3166L
3167L
3168L
3169L
3170L
3171L
3172L
3173L
3174L
3175L
3176L
3177L
3178L
3179L
3180L
3181L
3182L
3183L
3184L
3185L
3186L
3187L
3188L
3189L
3190L
3191L
3192L
3193L
3194L
3195L
3196L
3197L
3198L
3199L
3200L
3201L
3202L
3203L
3204L
3205L
3206L
3207L
3208L
3209L
3210L
3211L
3212L
3213L
3214L
3215L
3216L
3217L
3218L
3219L
3220L
3221L
3222L
3223L
3224L
3225L
3226L
3227L
3228L
3229L
3230L
3231L
3232L
3233L
3234L
3235L
3236L
3237L
3238L
3239L
3240L
3241L
3242L
3243L
3244L
3245L
3246L
3247L
3248L
3249L
3250L
3251L
3252L
3253L
3254L
3255L
3256L
3257L
3258L
3259L
3260L
3261L
3262L
3263L
3264L
3265L
3266L
3267L
3268L
3269L
3270L
3271L
3272L
3273L
3274L
3275L
3276L
3277L
3278L
3279L
3280L
3281L
3282L
3283L
3284L
3285L
3286L
3287L
3288L
3289L
3290L
3291L
3292L
3293L
3294L
3295L
3296L
3297L
3298L
3299L
3300L
3301L
3302L
3303L
3304L
3305L
3306L
3307L
3308L
3309L
3310L
3311L
3312L
3313L
3314L
3315L
3316L
3317L
3318L
3319L
3320L
3321L
3322L
3323L
3324L
3325L
3326L
3327L
3328L
3329L
3330L
3331L
3332L
3333L
3334L
3335L
3336L
3337L
3338L
3339L
3340L
3341L
3342L
3343L
3344L
3345L
3346L
3347L
3348L
3349L
3350L
3351L
3352L
3353L
3354L
3355L
3356L
3357L
3358L
3359L
3360L
3361L
3362L
3363L
3364L
3365L
3366L
3367L
3368L
3369L
3370L
3371L
3372L
3373L
3374L
3375L
3376L
3377L
3378L
3379L
3380L
3381L
3382L
3383L
3384L
3385L
3386L
3387L
3388L
3389L
3390L
3391L
3392L
3393L
3394L
3395L
3396L
3397L
3398L
3399L
3400L
3401L
3402L
3403L
3404L
3405L
3406L
3407L
3408L
3409L
3410L
3411L
3412L
3413L
3414L
3415L
3416L
3417L
3418L
3419L
3420L
3421L
3422L
3423L
3424L
3425L
3426L
3427L
3428L
3429L
3430L
3431L
3432L
3433L
3434L
3435L
3436L
3437L
3438L
3439L
3440L
3441L
3442L
3443L
3444L
3445L
3446L
3447L
3448L
3449L
3450L
3451L
3452L
3453L
3454L
3455L
3456L
3457L
3458L
3459L
3460L
3461L
3462L
3463L
3464L
3465L
3466L
3467L
3468L
3469L
3470L
3471L
3472L
3473L
3474L
3475L
3476L
3477L
3478L
3479L
3480L
3481L
3482L
3483L
3484L
3485L
3486L
3487L
3488L
3489L
3490L
3491L
3492L
3493L
3494L
3495L
3496L
3497L
3498L
3499L
3500L
3501L
3502L
3503L
3504L
3505L
3506L
3507L
3508L
3509L
3510L
3511L
3512L
3513L
3514L
3515L
3516L
3517L
3518L
3519L
3520L
3521L
3522L
3523L
3524L
3525L
3526L
3527L
3528L
3529L
3530L
3531L
3532L
3533L
3534L
3535L
3536L
3537L
3538L
3539L
3540L
3541L
3542L
3543L
3544L
3545L
3546L
3547L
3548L
3549L
3550L
3551L
3552L
3553L
3554L
3555L
3556L
3557L
3558L
3559L
3560L
3561L
3562L
3563L
3564L
3565L
3566L
3567L
3568L
3569L
3570L
3571L
3572L
3573L
3574L
3575L
3576L
3577L
3578L
3579L
3580L
3581L
3582L
3583L
3584L
3585L
3586L
3587L
3588L
3589L
3590L
3591L
3592L
3593L
3594L
3595L
3596L
3597L
3598L
3599L
3600L
3601L
3602L
3603L
3604L
3605L
3606L
3607L
3608L
3609L
3610L
3611L
3612L
3613L
3614L
3615L
3616L
3617L
3618L
3619L
3620L
3621L
3622L
3623L
3624L
3625L
3626L
3627L
3628L
3629L
3630L
3631L
3632L
3633L
3634L
3635L
3636L
3637L
3638L
3639L
3640L
3641L
3642L
3643L
3644L
3645L
3646L
3647L
3648L
3649L
3650L
3651L
3652L
3653L
3654L
3655L
3656L
3657L
3658L
3659L
3660L
3661L
3662L
3663L
3664L
3665L
3666L
3667L
3668L
3669L
3670L
3671L
3672L
3673L
3674L
3675L
3676L
3677L
3678L
3679L
3680L
3681L
3682L
3683L
3684L
3685L
3686L
3687L
3688L
3689L
3690L
3691L
3692L
3693L
3694L
3695L
3696L
3697L
3698L
3699L
3700L
3701L
3702L
3703L
3704L
3705L
3706L
3707L
3708L
3709L
3710L
3711L
3712L
3713L
3714L
3715L
3716L
3717L
3718L
3719L
3720L
3721L
3722L
3723L
3724L
3725L
3726L
3727L
3728L
3729L
3730L
3731L
3732L
3733L
3734L
3735L
3736L
3737L
3738L
3739L
3740L
3741L
3742L
3743L
3744L
3745L
3746L
3747L
3748L
3749L
3750L
3751L
3752L
3753L
3754L
3755L
3756L
3757L
3758L
3759L
3760L
3761L
3762L
3763L
3764L
3765L
3766L
3767L
3768L
3769L
3770L
3771L
3772L
3773L
3774L
3775L
3776L
3777L
3778L
3779L
3780L
3781L
3782L
3783L
3784L
3785L
3786L
3787L
3788L
3789L
3790L
3791L
3792L
3793L
3794L
3795L
3796L
3797L
3798L
3799L
3800L
3801L
3802L
3803L
3804L
3805L
3806L
3807L
3808L
3809L
3810L
3811L
3812L
3813L
3814L
3815L
3816L
3817L
3818L
3819L
3820L
3821L
3822L
3823L
3824L
3825L
3826L
3827L
3828L
3829L
3830L
3831L
3832L
3833L
3834L
3835L
3836L
3837L
3838L
3839L
3840L
3841L
3842L
3843L
3844L
3845L
3846L
3847L
3848L
3849L
3850L
3851L
3852L
3853L
3854L
3855L
3856L
3857L
3858L
3859L
3860L
3861L
3862L
3863L
3864L
3865L
3866L
3867L
3868L
3869L
3870L
3871L
3872L
3873L
3874L
3875L
3876L
3877L
3878L
3879L
3880L
3881L
3882L
3883L
3884L
3885L
3886L
3887L
3888L
3889L
3890L
3891L
3892L
3893L
3894L
3895L
3896L
3897L
3898L
3899L
3900L
3901L
3902L
3903L
3904L
3905L
3906L
3907L
3908L
3909L
3910L
3911L
3912L
3913L
3914L
3915L
3916L
3917L
3918L
3919L
3920L
3921L
3922L
3923L
3924L
3925L
3926L
3927L
3928L
3929L
3930L
3931L
3932L
3933L
3934L
3935L
3936L
3937L
3938L
3939L
3940L
3941L
3942L
3943L
3944L
3945L
3946L
3947L
3948L
3949L
3950L
3951L
3952L
3953L
3954L
3955L
3956L
3957L
3958L
3959L
3960L
3961L
3962L
3963L
3964L
3965L
3966L
3967L
3968L
3969L
3970L
3971L
3972L
3973L
3974L
3975L
3976L
3977L
3978L
3979L
3980L
3981L
3982L
3983L
3984L
3985L
3986L
3987L
3988L
3989L
3990L
3991L
3992L
3993L
3994L
3995L
3996L
3997L
3998L
3999L
4000L
4001L
4002L
4003L
4004L
4005L
4006L
4007L
4008L
4009L
4010L
4011L
4012L
4013L
4014L
4015L
4016L
4017L
4018L
4019L
4020L
4021L
4022L
4023L
4024L
4025L
4026L
4027L
4028L
4029L
4030L
4031L
4032L
4033L
4034L
4035L
4036L
4037L
4038L
4039L
4040L
4041L
4042L
4043L
4044L
4045L
4046L
4047L
4048L
4049L
4050L
4051L
4052L
4053L
4054L
4055L
4056L
4057L
4058L
4059L
4060L
4061L
4062L
4063L
4064L
4065L
4066L
4067L
4068L
4069L
4070L
4071L
4072L
4073L
4074L
4075L
4076L
4077L
4078L
4079L
4080L
4081L
4082L
4083L
4084L
4085L
4086L
4087L
4088L
4089L
4090L
4091L
4092L
4093L
4094L
4095L
4096L
4097L
4098L
4099L
4100L
4101L
4102L
4103L
4104L
4105L
4106L
4107L
4108L
4109L
4110L
4111L
4112L
4113L
4114L
4115L
4116L
4117L
4118L
4119L
4120L
4121L
4122L
4123L
4124L
4125L
4126L
4127L
4128L
4129L
4130L
4131L
4132L
4133L
4134L
4135L
4136L
4137L
4138L
4139L
4140L
4141L
4142L
4143L
4144L
4145L
4146L
4147L
4148L
4149L
4150L
4151L
4152L
4153L
4154L
4155L
4156L
4157L
4158L
4159L
4160L
4161L
4162L
4163L
4164L
4165L
4166L
4167L
4168L
4169L
4170L
4171L
4172L
4173L
4174L
4175L
4176L
4177L
4178L
4179L
4180L
4181L
4182L
4183L
4184L
4185L
4186L
4187L
4188L
4189L
4190L
4191L
4192L
4193L
4194L
4195L
4196L
4197L
4198L
4199L
4200L
4201L
4202L
4203L
4204L
4205L
4206L
4207L
4208L
4209L
4210L
4211L
4212L
4213L
4214L
4215L
4216L
4217L
4218L
4219L
4220L
4221L
4222L
4223L
4224L
4225L
4226L
4227L
4228L
4229L
4230L
4231L
4232L
4233L
4234L
4235L
4236L
4237L
4238L
4239L
4240L
4241L
4242L
4243L
4244L
4245L
4246L
4247L
4248L
4249L
4250L
4251L
4252L
4253L
4254L
4255L
4256L
4257L
4258L
4259L
4260L
4261L
4262L
4263L
4264L
4265L
4266L
4267L
4268L
4269L
4270L
4271L
4272L
4273L
4274L
4275L
4276L
4277L
4278L
4279L
4280L
4281L
4282L
4283L
4284L
4285L
4286L
4287L
4288L
4289L
4290L
4291L
4292L
4293L
4294L
4295L
4296L
4297L
4298L
4299L
4300L
4301L
4302L
4303L
4304L
4305L
4306L
4307L
4308L
4309L
4310L
4311L
4312L
4313L
4314L
4315L
4316L
4317L
4318L
4319L
4320L
4321L
4322L
4323L
4324L
4325L
4326L
4327L
4328L
4329L
4330L
4331L
4332L
4333L
4334L
4335L
4336L
4337L
4338L
4339L
4340L
4341L
4342L
4343L
4344L
4345L
4346L
4347L
4348L
4349L
4350L
4351L
4352L
4353L
4354L
4355L
4356L
4357L
4358L
4359L
4360L
4361L
4362L
4363L
4364L
4365L
4366L
4367L
4368L
4369L
4370L
4371L
4372L
4373L
4374L
4375L
4376L
4377L
4378L
4379L
4380L
4381L
4382L
4383L
4384L
4385L
4386L
4387L
4388L
4389L
4390L
4391L
4392L
4393L
4394L
4395L
4396L
4397L
4398L
4399L
4400L
4401L
4402L
4403L
4404L
4405L
4406L
4407L
4408L
4409L
4410L
4411L
4412L
4413L
4414L
4415L
4416L
4417L
4418L
4419L
4420L
4421L
4422L
4423L
4424L
4425L
4426L
4427L
4428L
4429L
4430L
4431L
4432L
4433L
4434L
4435L
4436L
4437L
4438L
4439L
4440L
4441L
4442L
4443L
4444L
4445L
4446L
4447L
4448L
4449L
4450L
4451L
4452L
4453L
4454L
4455L
4456L
4457L
4458L
4459L
4460L
4461L
4462L
4463L
4464L
4465L
4466L
4467L
4468L
4469L
4470L
4471L
4472L
4473L
4474L
4475L
4476L
4477L
4478L
4479L
4480L
4481L
4482L
4483L
4484L
4485L
4486L
4487L
4488L
4489L
4490L
4491L
4492L
4493L
4494L
4495L
4496L
4497L
4498L
4499L
4500L
4501L
4502L
4503L
4504L
4505L
4506L
4507L
4508L
4509L
4510L
4511L
4512L
4513L
4514L
4515L
4516L
4517L
4518L
4519L
4520L
4521L
4522L
4523L
4524L
4525L
4526L
4527L
4528L
4529L
4530L
4531L
4532L
4533L
4534L
4535L
4536L
4537L
4538L
4539L
4540L
4541L
4542L
4543L
4544L
4545L
4546L
4547L
4548L
4549L
4550L
4551L
4552L
4553L
4554L
4555L
4556L
4557L
4558L
4559L
4560L
4561L
4562L
4563L
4564L
4565L
4566L
4567L
4568L
4569L
4570L
4571L
4572L
4573L
4574L
4575L
4576L
4577L
4578L
4579L
4580L
4581L
4582L
4583L
4584L
4585L
4586L
4587L
4588L
4589L
4590L
4591L
4592L
4593L
4594L
4595L
4596L
4597L
4598L
4599L
4600L
4601L
4602L
4603L
4604L
4605L
4606L
4607L
4608L
4609L
4610L
4611L
4612L
4613L
4614L
4615L
4616L
4617L
4618L
4619L
4620L
4621L
4622L
4623L
4624L
4625L
4626L
4627L
4628L
4629L
4630L
4631L
4632L
4633L
4634L
4635L
4636L
4637L
4638L
4639L
4640L
4641L
4642L
4643L
4644L
4645L
4646L
4647L
4648L
4649L
4650L
4651L
4652L
4653L
4654L
4655L
4656L
4657L
4658L
4659L
4660L
4661L
4662L
4663L
4664L
4665L
4666L
4667L
4668L
4669L
4670L
4671L
4672L
4673L
4674L
4675L
4676L
4677L
4678L
4679L
4680L
4681L
4682L
4683L
4684L
4685L
4686L
4687L
4688L
4689L
4690L
4691L
4692L
4693L
4694L
4695L
4696L
4697L
4698L
4699L
4700L
4701L
4702L
4703L
4704L
4705L
4706L
4707L
4708L
4709L
4710L
4711L
4712L
4713L
4714L
4715L
4716L
4717L
4718L
4719L
4720L
4721L
4722L
4723L
4724L
4725L
4726L
4727L
4728L
4729L
4730L
4731L
4732L
4733L
4734L
4735L
4736L
4737L
4738L
4739L
4740L
4741L
4742L
4743L
4744L
4745L
4746L
4747L
4748L
4749L
4750L
4751L
4752L
4753L
4754L
4755L
4756L
4757L
4758L
4759L
4760L
4761L
4762L
4763L
4764L
4765L
4766L
4767L
4768L
4769L
4770L
4771L
4772L
4773L
4774L
4775L
4776L
4777L
4778L
4779L
4780L
4781L
4782L
4783L
4784L
4785L
4786L
4787L
4788L
4789L
4790L
4791L
4792L
4793L
4794L
4795L
4796L
4797L
4798L
4799L
4800L

Figure A6-29 : 2019 Summer Peak Post-Project Alternative 2 Case B - Contingency of 650ST1 (Hansman Lake 650S Transformer T1)

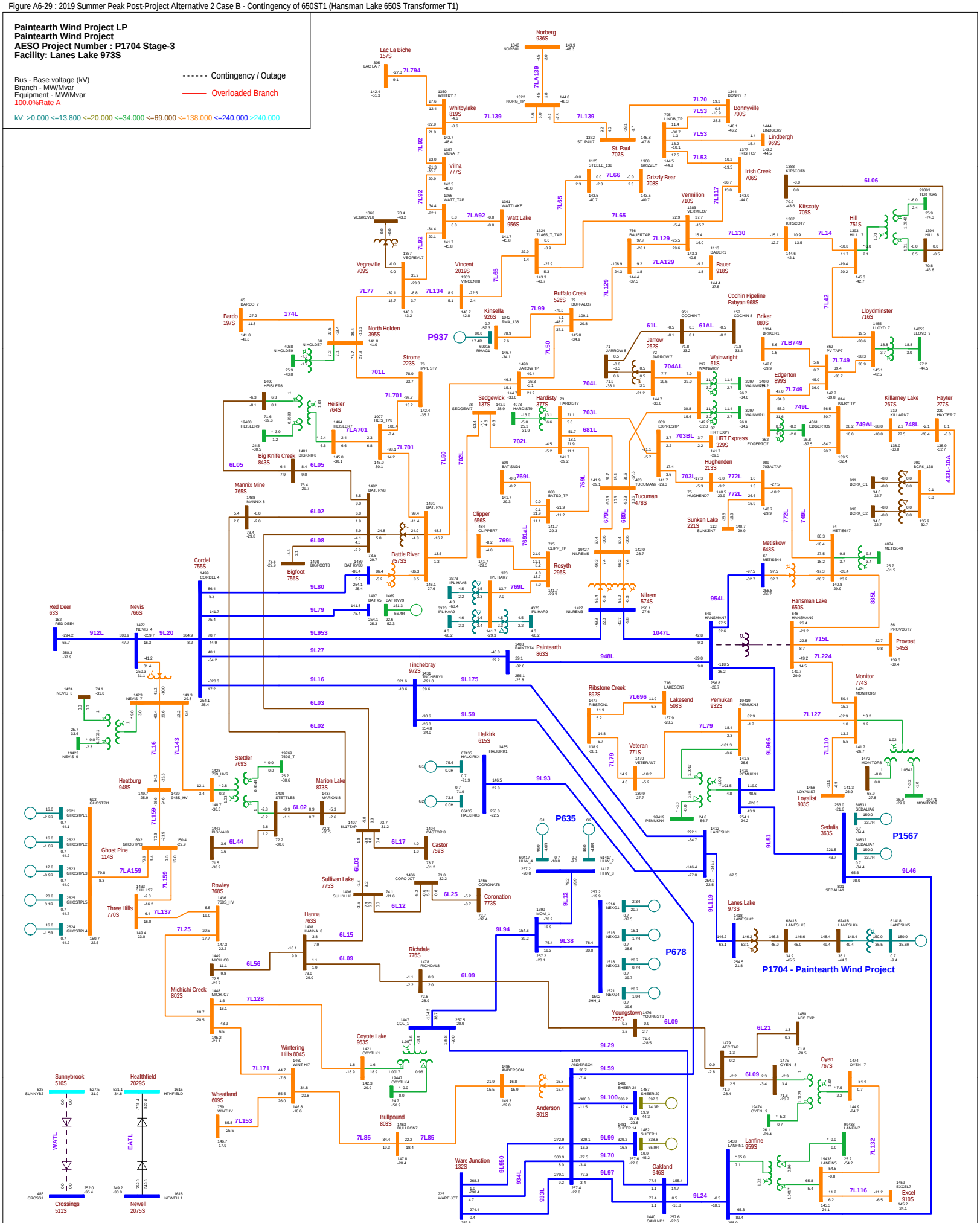

Figure A6-30 : 2019 Summer Peak Post-Project Alternative 2 Case B - Contingency of 681L (Tucuman 478S - Hardisty 377S)

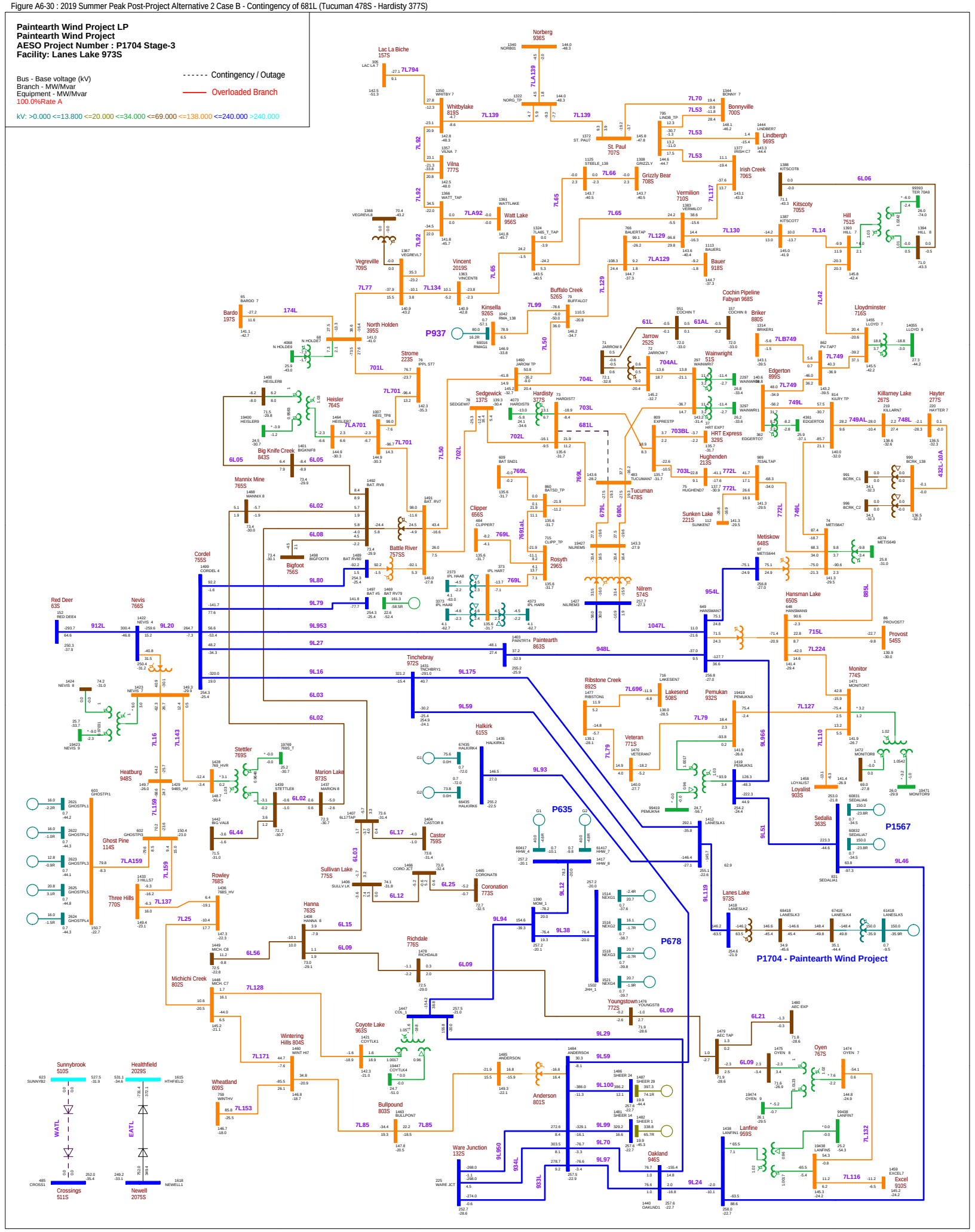

Figure A6-31 : 2019 Summer Peak Post-Project Alternative 2 Case B - Contingency of 701L (North Holden 395S - Strome 223S)

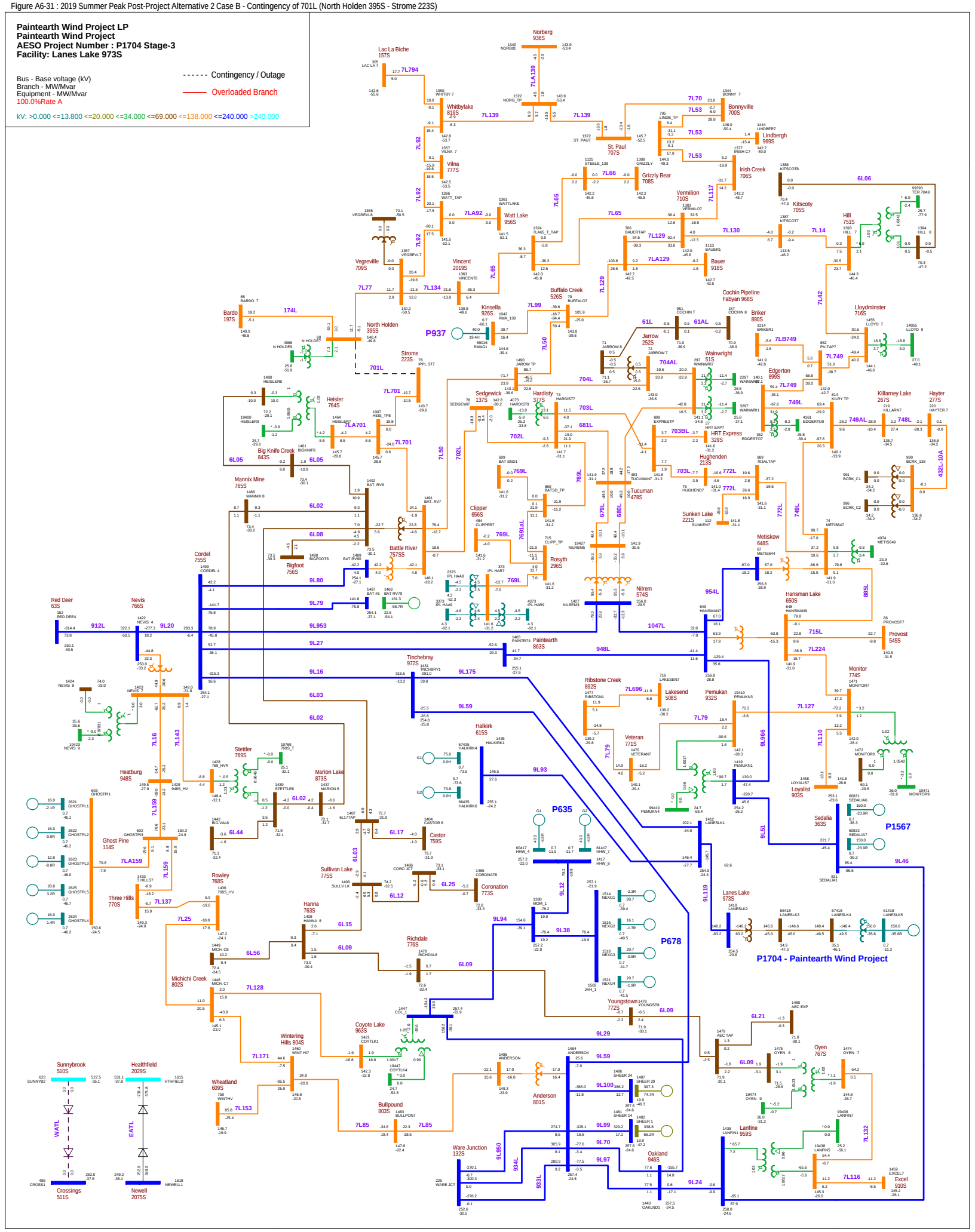

Figure A6-32 : 2019 Summer Peak Post-Project Alternative 2 Case B - Contingency of 749L\749AL (Metiskow 648S - Edgerton 899S)

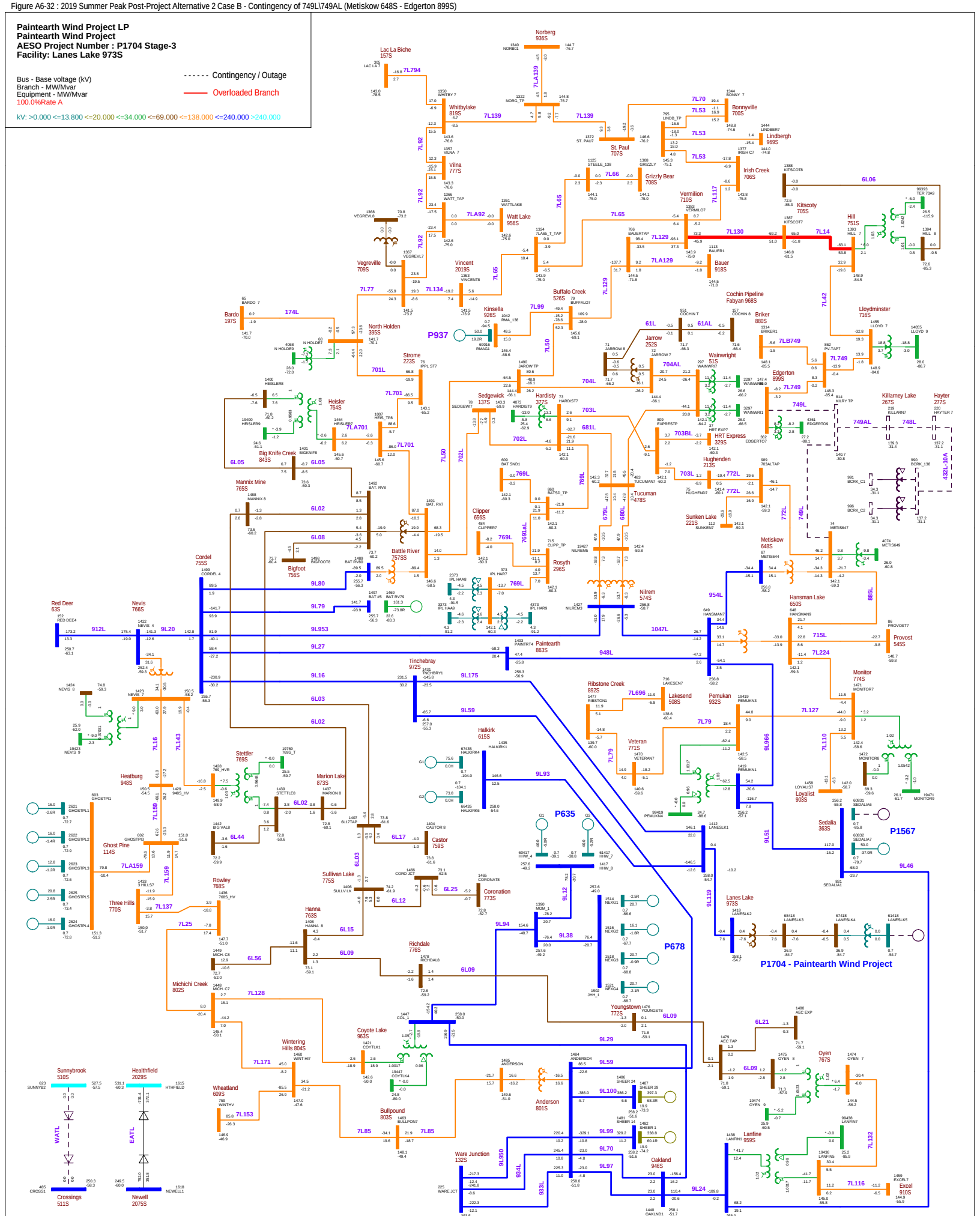

Figure A6-33 : 2019 Summer Peak Post-Project Alternative 2 Case B - Contingency of 766S901T (Nevis 766S Transformer 901T)

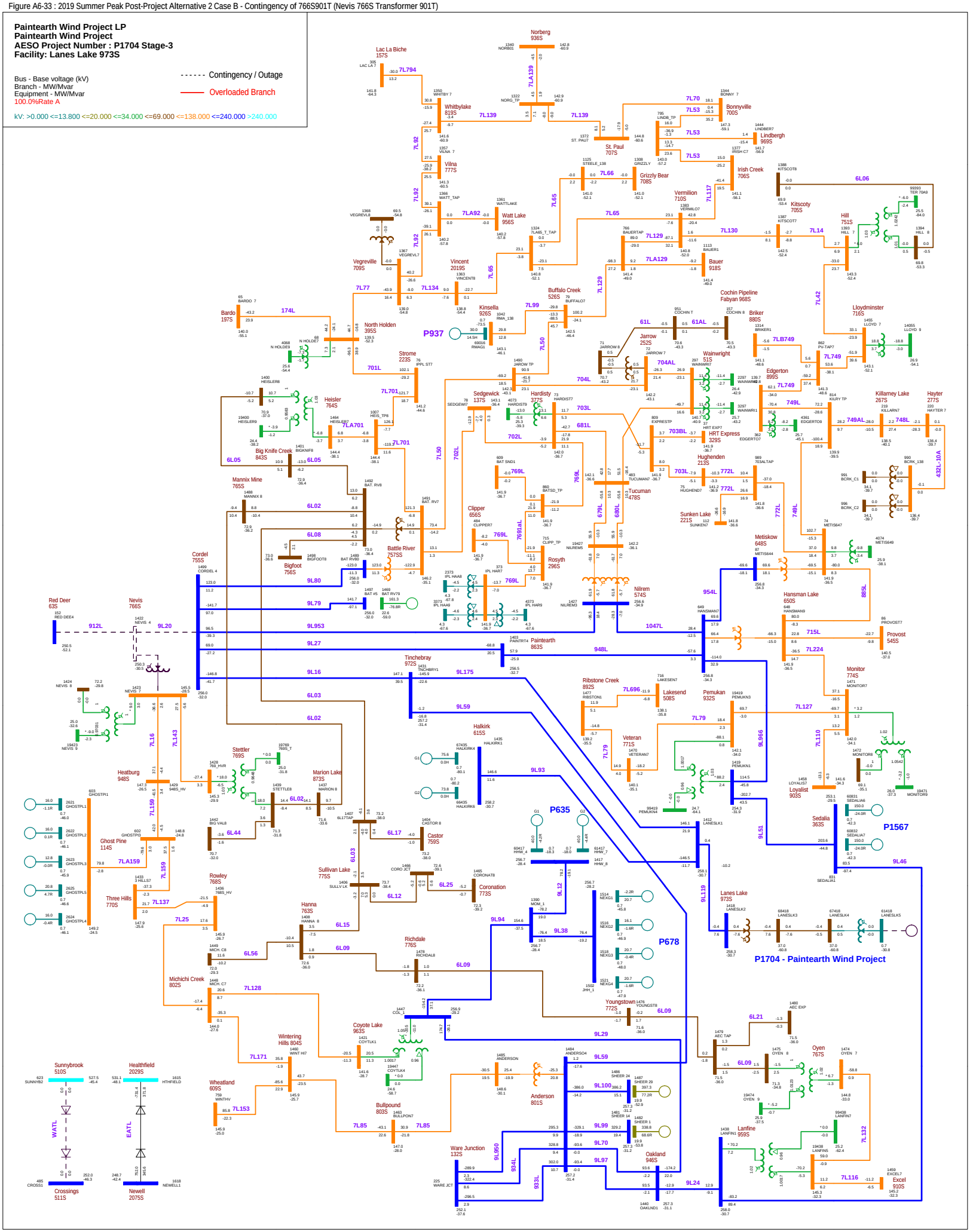

Figure A6-34 : 2019 Summer Peak Post-Project Alternative 2 Case B - Contingency of 769L\769AL (Hardisty 377S - Clipper 656S - Rosyth 286S)

Paintearth Wind Project LP
Paintearth Wind Project
AESO Project Number : P1704 Stage-3
Facility: Lanes Lake 973S

Bus - Base voltage (kV)
Branch - MW/Mvar
Equipment - MW/Mvar
100.0%Rate A

Contingency / Outage
Overloaded Branch

kV: >0.000 <=13.800 <=20.000 <=34.000 <=69.000 <=138.000 <=240.000 >240.000

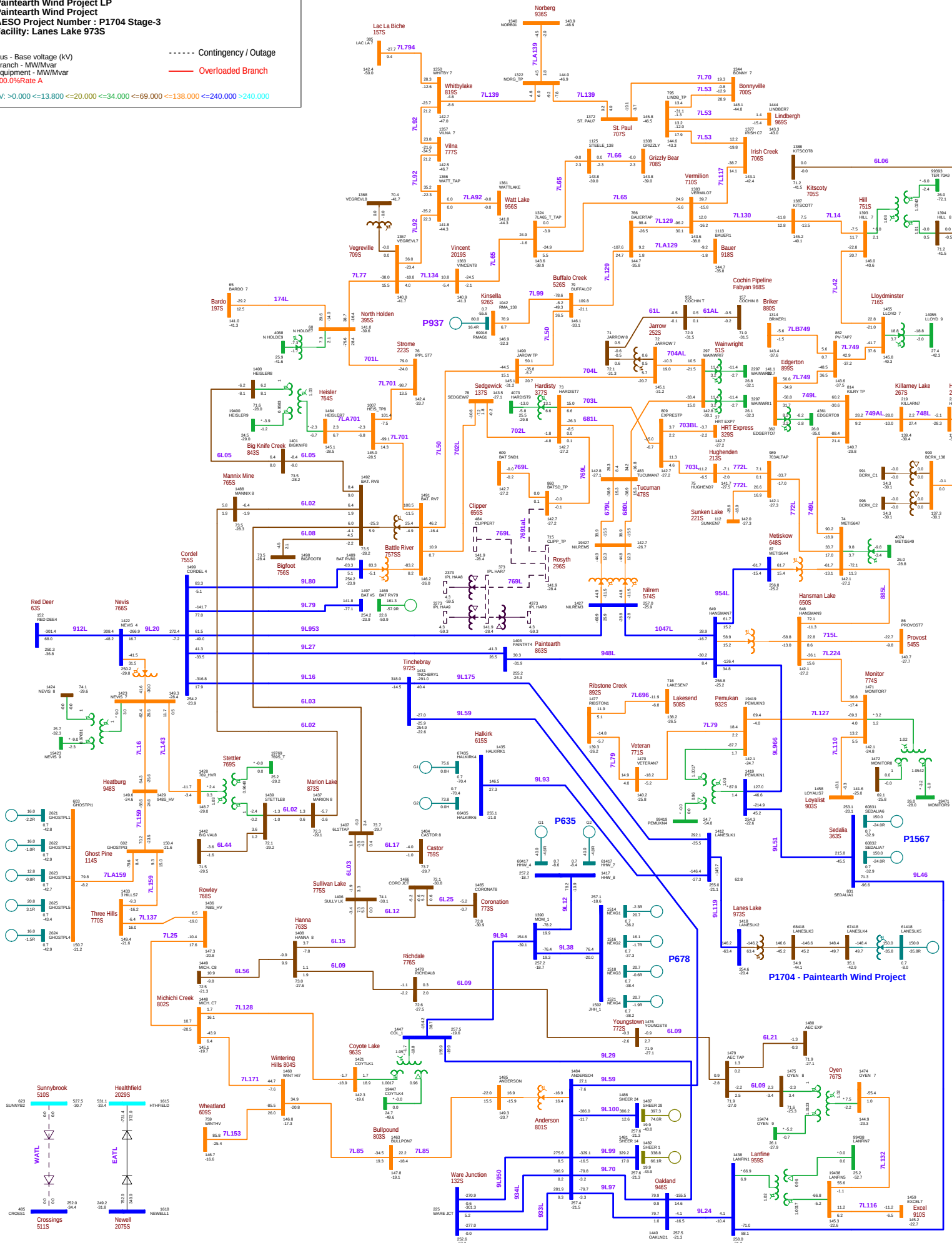

Figure A6-35 : 2019 Summer Peak Post-Project Alternative 2 Case B - Contingency of 7L42 (Hill 751S - Lloydminster 716S)

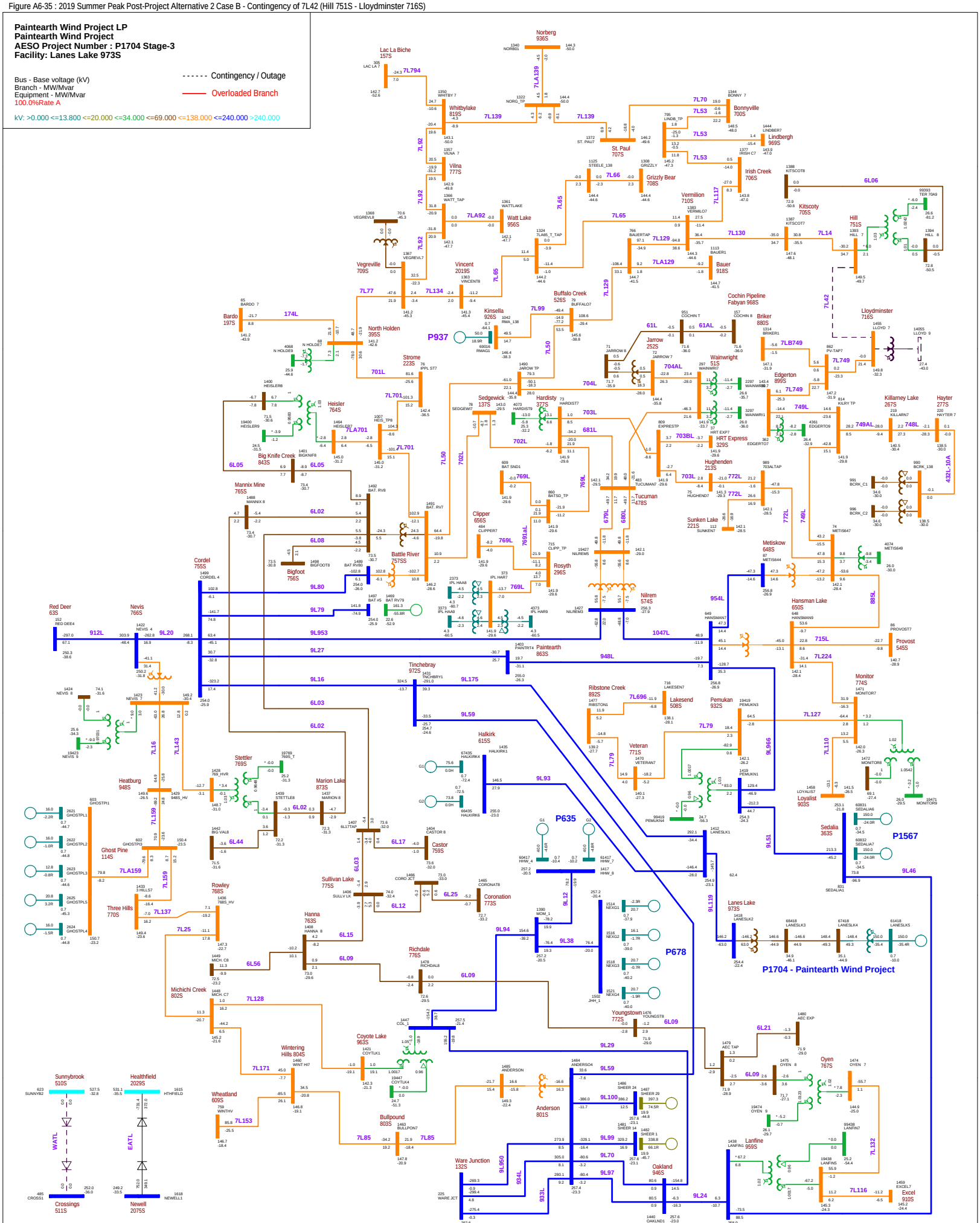

Figure A6-36 : 2019 Summer Peak Post-Project Alternative 2 Case B - Contingency of 7L701\7LA701\701L (Battle River 757S - Heisler 764S - Strome 223S)

Paintearth Wind Project LP
Paintearth Wind Project
AESO Project Number : P1704 Stage-3
Facility: Lanes Lake 973S

Bus - Base voltage (kV)
Branch - MW/Mvar
Equipment - MW/Mvar
100.0%Rate A

Contingency / Outage
Overloaded Branch

kV: >0.000 <=13.800 <=20.000 <=34.000 <=69.000 <=138.000 <=240.000 >240.000

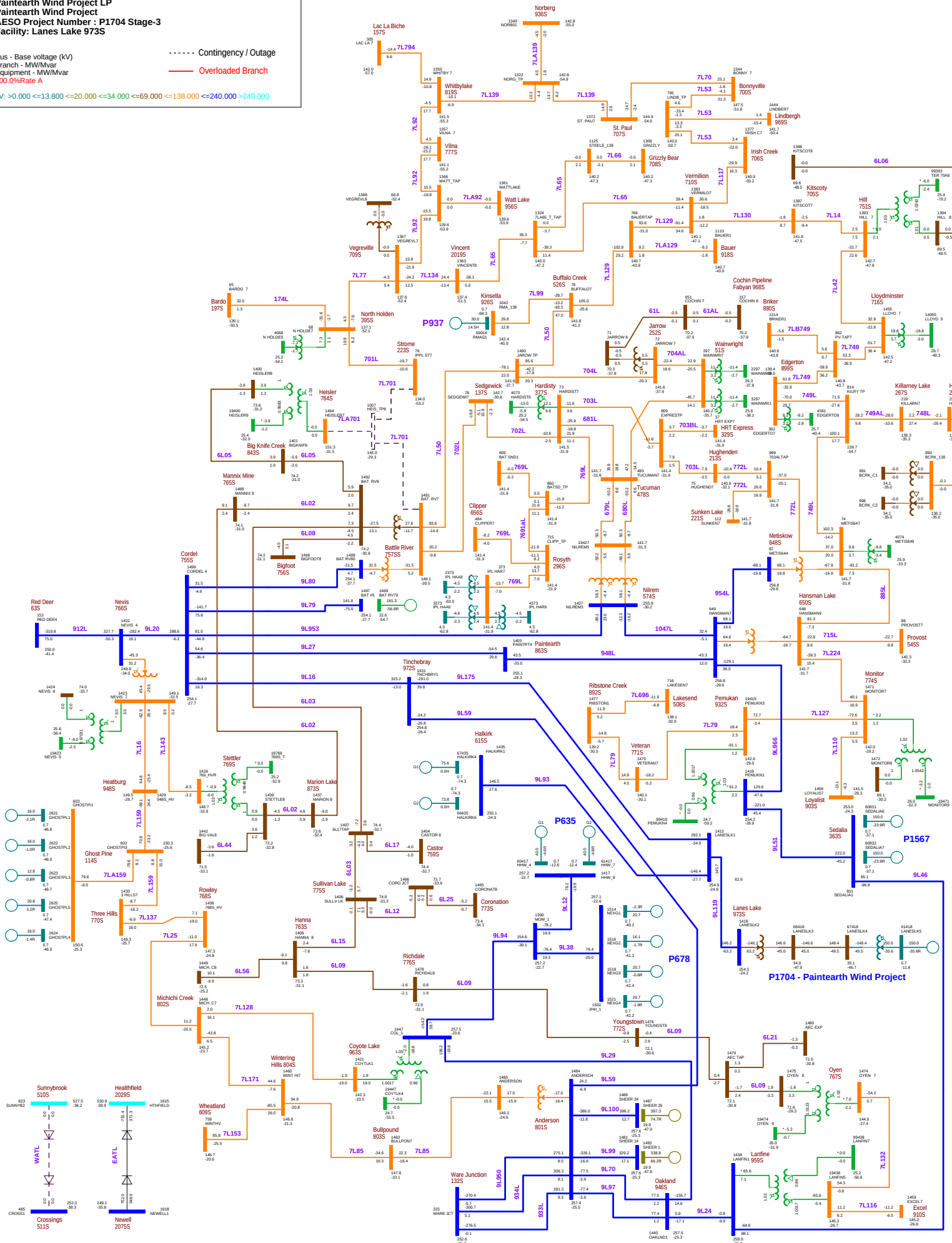

Figure A6-37 : 2019 Summer Peak Post-Project Alternative 2 Case B - Contingency of 7L749\749L\7LB749 (Edgerton 899S - Briker 880S - Lloydminster 716S)

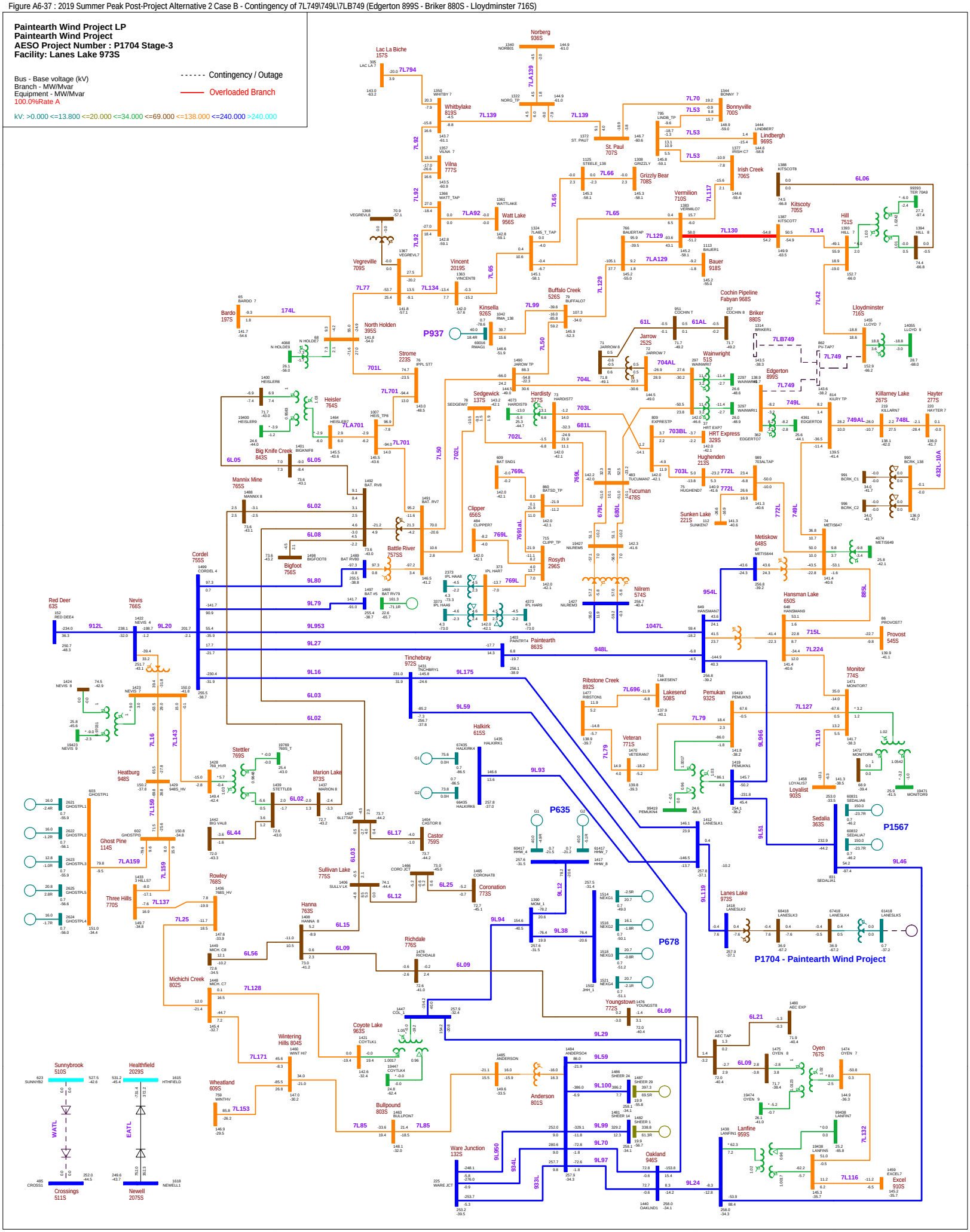

Figure A6-38 : 2019 Summer Peak Post-Project Alternative 2 Case B - Contingency of 7L77 (North Holden 395S - Vegreville 709S)

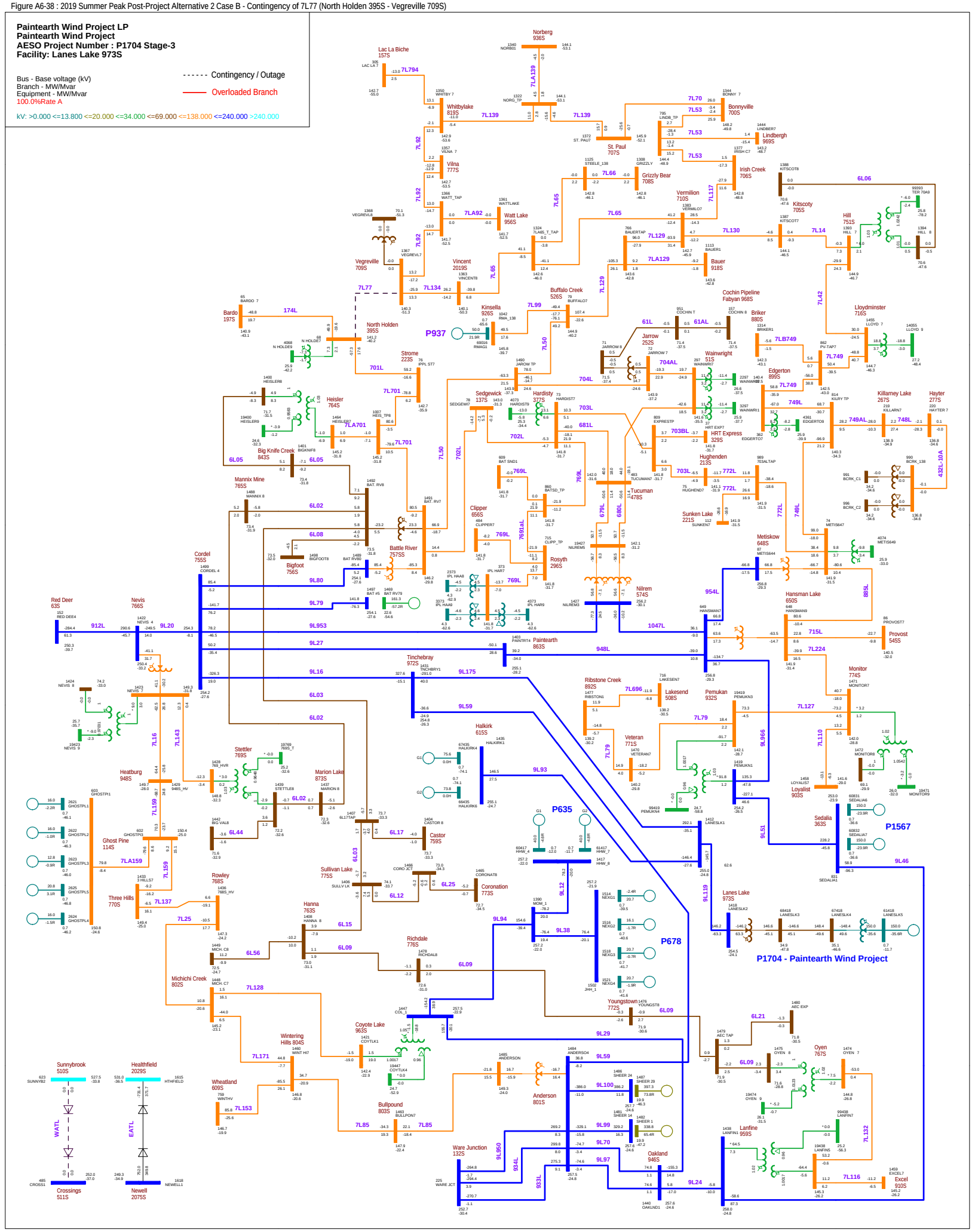

Figure A6-39 : 2019 Summer Peak Post-Project Alternative 2 Case B - Contingency of 885L (Hansman Lake 650S - Metiskow 648S)

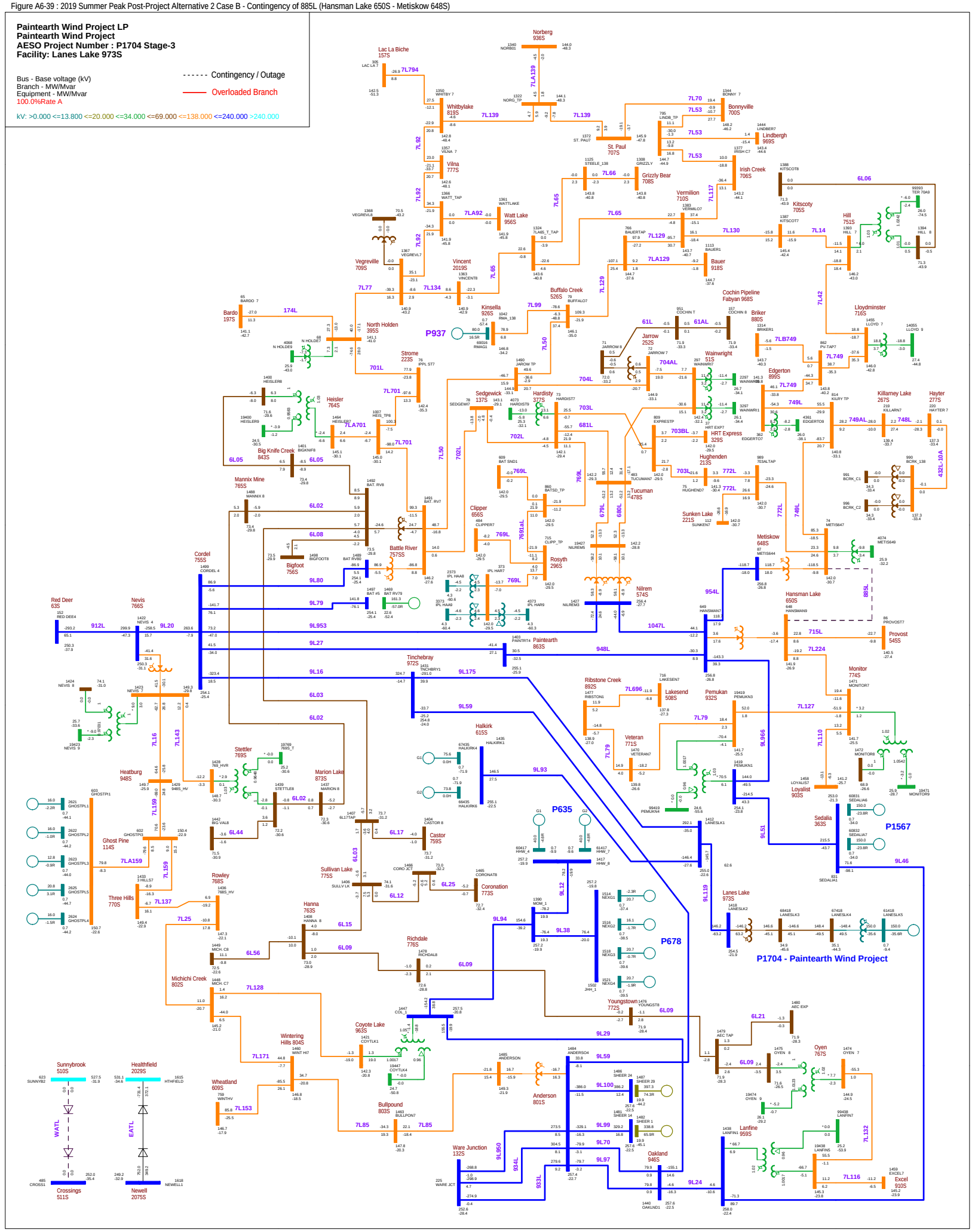

Figure A6-40 : 2019 Summer Peak Post-Project Alternative 2 Case B - Contingency of 899ST3A (Edgerton 899S Transformer T3A)

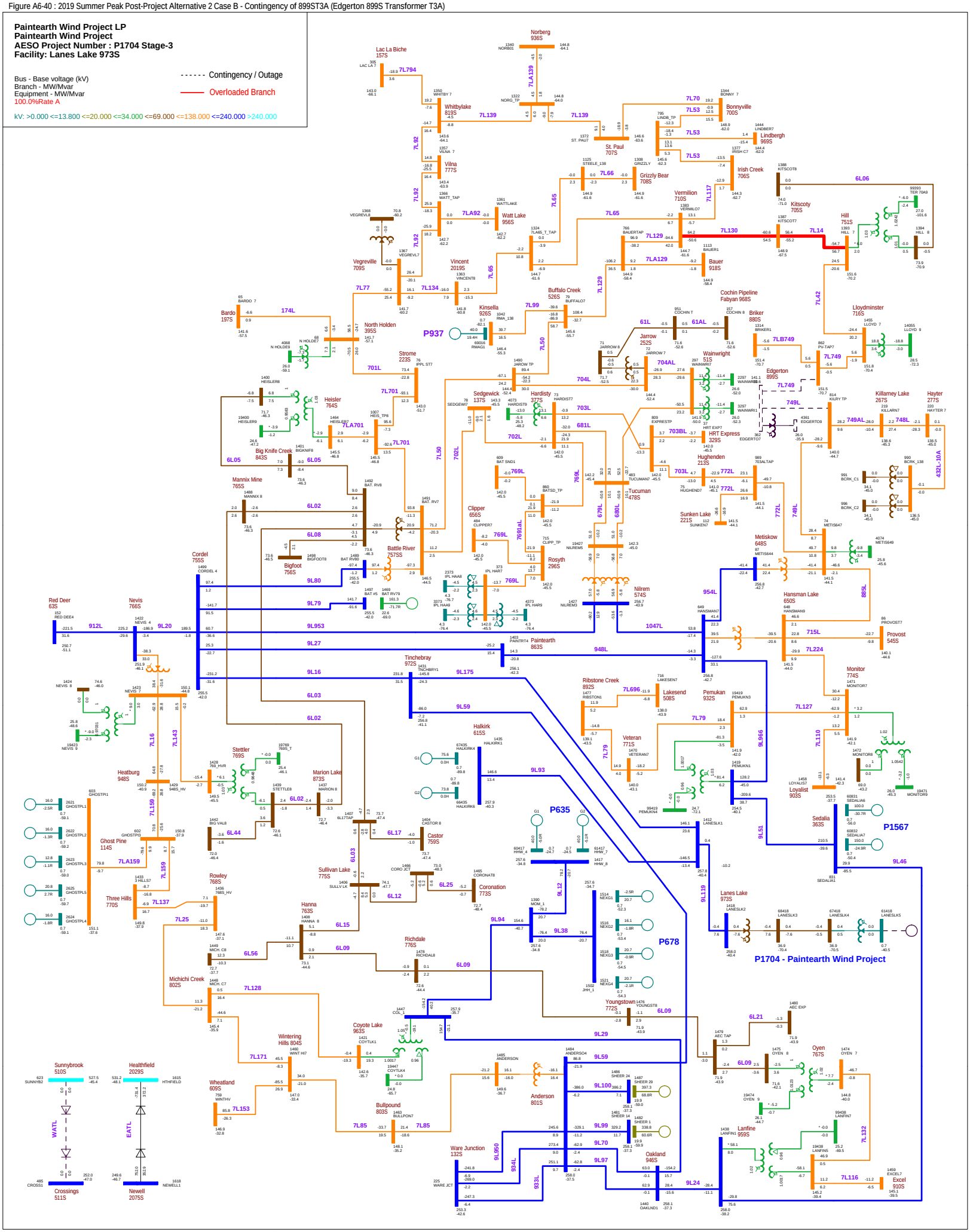

Figure A6-41 : 2019 Summer Peak Post-Project Alternative 2 Case B - Contingency of 912L\9L912 (Red Deer 63S - Nevis 766S)

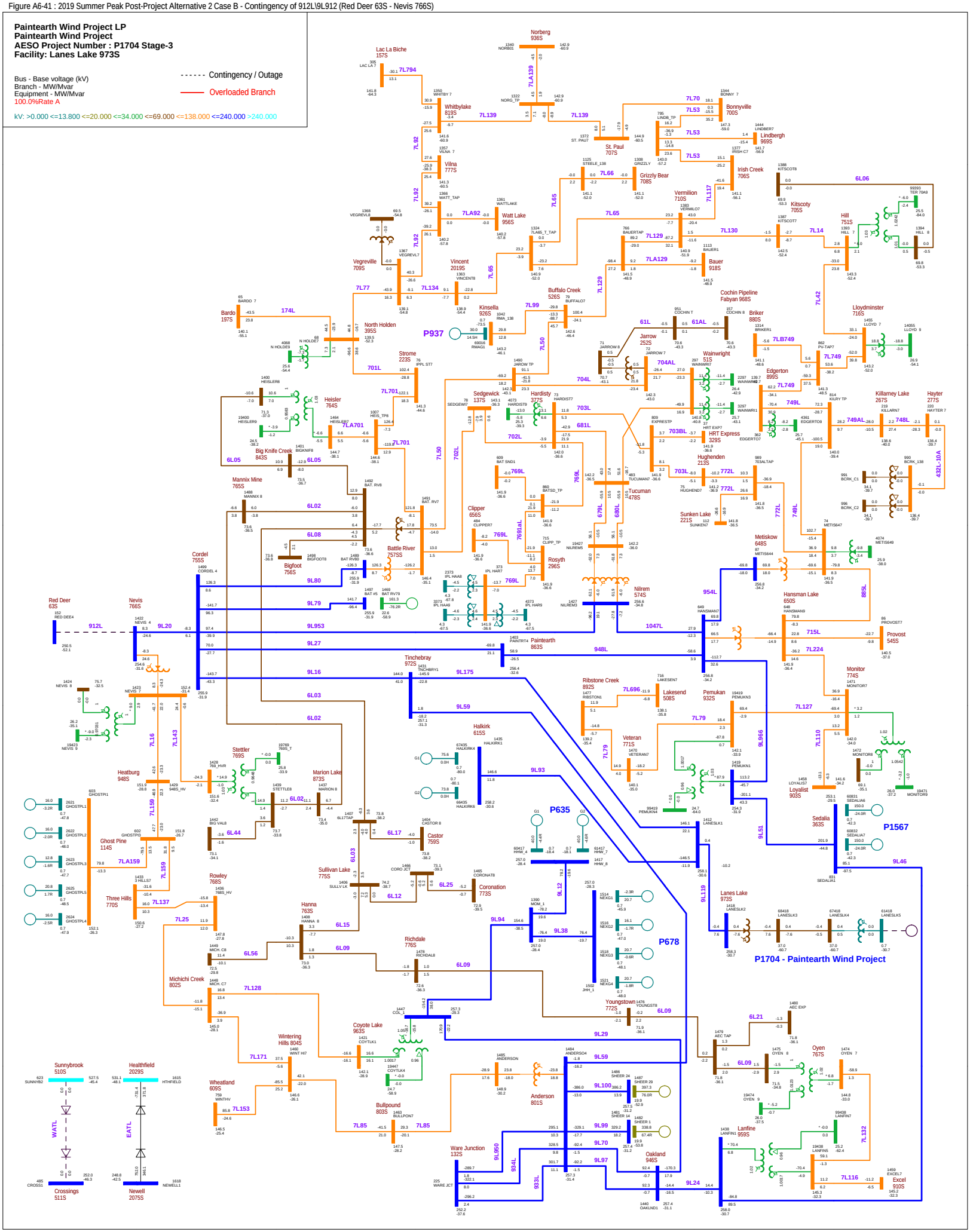

Figure A6-42 : 2019 Summer Peak Post-Project Alternative 2 Case B - Contingency of 954L (Hansman Lake 650S - Metiskow 648S)

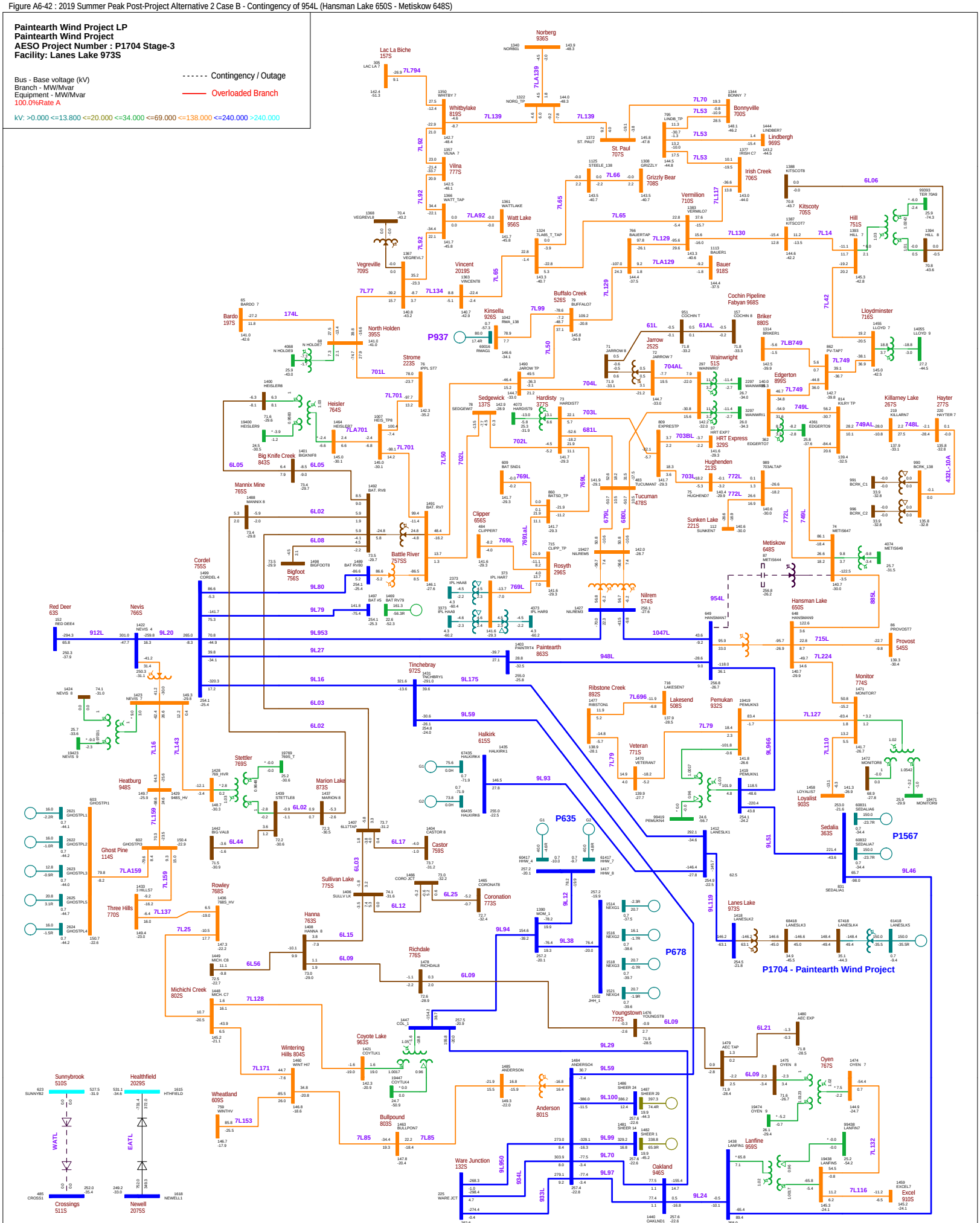
Paintearth Wind Project LP
Paintearth Wind Project
AESO Project Number : P1704 Stage-3
Facility: Lanes Lake 973S
Bus - Base voltage (kV)
Branch - MW/Mvar
Equipment - MW/Mvar
100.0%Rate A
Contingency / Outage
Overloaded Branch
kV: >0.000 <=13.800 <=20.000 <=34.000 <=69.000 <=138.000 <=240.000 >240.000
Norberg 936S
Lac La Biche 157S
Whitbylake 819S
Vilna 777S
Watt Lake 956S
Vegreville 709S
Vincent 2019S
Kinsella 926S
Buffalo Creek 526S
St. Paul 707S
Vermilion 710S
Bonnyville 700S
Lindbergh 969S
Irish Creek 706S
Grizzly Bear 708S
Bauer 918S
Kitscoty 705S
Hill 751S
Lloydminster 716S
Cochin Pipeline Fabyan 968S
Briker 880S
Jarrow 252S
Wainwright 51S
Edgerton 899S
HRT Express 329S
Killarney Lake 267S
Hayter 277S
Bardo 197S
North Holden 395S
Strome 223S
Heisler 764S
Big Knife Creek 843S
Sedgewick 137S
Hardisty 377S
Tucumar 478S
Hughenden 213S
Sunken Lake 221S
Mannix 765S
Clipper 656S
Battle River 757SS
Bigfoot 756S
Rosyth 296S
Nilrem 574S
Metiskow 648S
Hansman Lake 650S
Cordel 755S
Red Deer 63S
Nevis 766S
Tinchebray 972S
Paintearth 863S
Ribstone Creek 892S
Lakesend 508S
Pemukan 932S
Monitor 774S
Provost 545S
Veteran 771S
Loyalist 903S
Sedalia 363S
Heatburg 948S
Stettler 769S
Marion Lake 873S
Halkirk 615S
Castor 759S
Ghost Pine 114S
Three Hills 770S
Rowley 768S
Sullivan Lake 775S
Coronation 773S
Hanna 763S
Richdale 776S
Michichi Creek 802S
Youngstown 772S
Lanes Lake 973S
Oyen 767S
Lanfine 959S
Excel 910S
Coyote Lake 963S
Wintering Hills 804S
Wheatland 609S
Bullpound 803S
Anderson 801S
Ware Junction 132S
Oakland 946S
Sunnybrook 510S
Healthfield 2029S
Crossings 511S
Newell 2075S
P937
P635
P678
P1567
P1704 - Paintearth Wind Project
7L794
7LA139
7L139
7L92
7LA92
7L93
7L65
7L66
7L70
7L53
7L117
7L130
7L14
6L06
7LA129
7L129
7L42
7L77
7L134
7L99
7L50
7L701
7LA701
7L702
7L703
7L704
7L704AL
61L
61AL
7L749
7LB749
749L
749AL
748L
432L-10A
703BL
772L
769L
7691aL
679L
680L
703L
702L
6L05
6L02
6L08
6L80
9L80
9L79
9L20
912L
9L953
9L27
9L16
6L03
9L175
9L59
9L93
9L94
9L38
9L12
6L12
6L15
6L09
6L25
6L17
6L02
6L44
7LA159
7L159
7L143
7L16
7L169
7L137
7L25
7L128
7L171
7L153
7L85
9L950
934L
933L
9L99
9L97
9L70
9L100
9L24
7L116
7L132
6L21
9L29
9L966
7L110
7L127
7L79
7L696
7L224
715L
954L
885L
1047L
948L
6L56
6L103
6L109
6L115
6L116
6L117
6L118
6L119
6L120
6L121
6L122
6L123
6L124
6L125
6L126
6L127
6L128
6L129
6L130
6L131
6L132
6L133
6L134
6L135
6L136
6L137
6L138
6L139
6L140
6L141
6L142
6L143
6L144
6L145
6L146
6L147
6L148
6L149
6L150
6L151
6L152
6L153
6L154
6L155
6L156
6L157
6L158
6L159
6L160
6L161
6L162
6L163
6L164
6L165
6L166
6L167
6L168
6L169
6L170
6L171
6L172
6L173
6L174
6L175
6L176
6L177
6L178
6L179
6L180
6L181
6L182
6L183
6L184
6L185
6L186
6L187
6L188
6L189
6L190
6L191
6L192
6L193
6L194
6L195
6L196
6L197
6L198
6L199
6L200
6L201
6L202
6L203
6L204
6L205
6L206
6L207
6L208
6L209
6L210
6L211
6L212
6L213
6L214
6L215
6L216
6L217
6L218
6L219
6L220
6L221
6L222
6L223
6L224
6L225
6L226
6L227
6L228
6L229
6L230
6L231
6L232
6L233
6L234
6L235
6L236
6L237
6L238
6L239
6L240
6L241
6L242
6L243
6L244
6L245
6L246
6L247
6L248
6L249
6L250
6L251
6L252
6L253
6L254
6L255
6L256
6L257
6L258
6L259
6L260
6L261
6L262
6L263
6L264
6L265
6L266
6L267
6L268
6L269
6L270
6L271
6L272
6L273
6L274
6L275
6L276
6L277
6L278
6L279
6L280
6L281
6L282
6L283
6L284
6L285
6L286
6L287
6L288
6L289
6L290
6L291
6L292
6L293
6L294
6L295
6L296
6L297
6L298
6L299
6L300
6L301
6L302
6L303
6L304
6L305
6L306
6L307
6L308
6L309
6L310
6L311
6L312
6L313
6L314
6L315
6L316
6L317
6L318
6L319
6L320
6L321
6L322
6L323
6L324
6L325
6L326
6L327
6L328
6L329
6L330
6L331
6L332
6L333
6L334
6L335
6L336
6L337
6L338
6L339
6L340
6L341
6L342
6L343
6L344
6L345
6L346
6L347
6L348
6L349
6L350
6L351
6L352
6L353
6L354
6L355
6L356
6L357
6L358
6L359
6L360
6L361
6L362
6L363
6L364
6L365
6L366
6L367
6L368
6L369
6L370
6L371
6L372
6L373
6L374
6L375
6L376
6L377
6L378
6L379
6L380
6L381
6L382
6L383
6L384
6L385
6L386
6L387
6L388
6L389
6L390
6L391
6L392
6L393
6L394
6L395
6L396
6L397
6L398
6L399
6L400
6L401
6L402
6L403
6L404
6L405
6L406
6L407
6L408
6L409
6L410
6L411
6L412
6L413
6L414
6L415
6L416
6L417
6L418
6L419
6L420
6L421
6L422
6L423
6L424
6L425
6L426
6L427
6L428
6L429
6L430
6L431
6L432
6L433
6L434
6L435
6L436
6L437
6L438
6L439
6L440
6L441
6L442
6L443
6L444
6L445
6L446
6L447
6L448
6L449
6L450
6L451
6L452
6L453
6L454
6L455
6L456
6L457
6L458
6L459
6L460
6L461
6L462
6L463
6L464
6L465
6L466
6L467
6L468
6L469
6L470
6L471
6L472
6L473
6L474
6L475
6L476
6L477
6L478
6L479
6L480
6L481
6L482
6L483
6L484
6L485
6L486
6L487
6L488
6L489
6L490
6L491
6L492
6L493
6L494
6L495
6L496
6L497
6L498
6L499
6L500
6L501
6L502
6L503
6L504
6L505
6L506
6L507
6L508
6L509
6L510
6L511
6L512
6L513
6L514
6L515
6L516
6L517
6L518
6L519
6L520
6L521
6L522
6L523
6L524
6L525
6L526
6L527
6L528
6L529
6L530
6L531
6L532
6L533
6L534
6L535
6L536
6L537
6L538
6L539
6L540
6L541
6L542
6L543
6L544
6L545
6L546
6L547
6L548
6L549
6L550
6L551
6L552
6L553
6L554
6L555
6L556
6L557
6L558
6L559
6L560
6L561
6L562
6L563
6L564
6L565
6L566
6L567
6L568
6L569
6L570
6L571
6L572
6L573
6L574
6L575
6L576
6L577
6L578
6L579
6L580
6L581
6L582
6L583
6L584
6L585
6L586
6L587
6L588
6L589
6L590
6L591
6L592
6L593
6L594
6L595
6L596
6L597
6L598
6L599
6L600
6L601
6L602
6L603
6L604
6L605
6L606
6L607
6L608
6L609
6L610
6L611
6L612
6L613
6L614
6L615
6L616
6L617
6L618
6L619
6L620
6L621
6L622
6L623
6L624
6L625
6L626
6L627
6L628
6L629
6L630
6L631
6L632
6L633
6L634
6L635
6L636
6L637
6L638
6L639
6L640
6L641
6L642
6L643
6L644
6L645
6L646
6L647
6L648
6L649
6L650
6L651
6L652
6L653
6L654
6L655
6L656
6L657
6L658
6L659
6L660
6L661
6L662
6L663
6L664
6L665
6L666
6L667
6L668
6L669
6L670
6L671
6L672
6L673
6L674
6L675
6L676
6L677
6L678
6L679
6L680
6L681
6L682
6L683
6L684
6L685
6L686
6L687
6L688
6L689
6L690
6L691
6L692
6L693
6L694
6L695
6L696
6L697
6L698
6L699
6L700
6L701
6L702
6L703
6L704
6L705
6L706
6L707
6L708
6L709
6L710
6L711
6L712
6L713
6L714
6L715
6L716
6L717
6L718
6L719
6L720
6L721
6L722
6L723
6L724
6L725
6L726
6L727
6L728
6L729
6L730
6L731
6L732
6L733
6L734
6L735
6L736
6L737
6L738
6L739
6L740
6L741
6L742
6L743
6L744
6L745
6L746
6L747
6L748
6L749
6L750
6L751
6L752
6L753
6L754
6L755
6L756
6L757
6L758
6L759
6L760
6L761
6L762
6L763
6L764
6L765
6L766
6L767
6L768
6L769
6L770
6L771
6L772
6L773
6L774
6L775
6L776
6L777
6L778
6L779
6L780
6L781
6L782
6L783
6L784
6L785
6L786
6L787
6L788
6L789
6L790
6L791
6L792
6L793
6L794
6L795
6L796
6L797
6L798
6L799
6L800
6L801
6L802
6L803
6L804
6L805
6L806
6L807
6L808
6L809
6L810
6L811
6L812
6L813
6L814
6L815
6L816
6L817
6L818
6L819
6L820
6L821
6L822
6L823
6L824
6L825
6L826
6L827
6L828
6L829
6L830
6L831
6L832
6L833
6L834
6L835
6L836
6L837
6L838
6L839
6L840
6L841
6L842
6L843
6L844
6L845
6L846
6L847
6L848
6L849
6L850
6L851
6L852
6L853
6L854
6L855
6L856
6L857
6L858
6L859
6L860
6L861
6L862
6L863
6L864
6L865
6L866
6L867
6L868
6L869
6L870
6L871
6L872
6L873
6L874
6L875
6L876
6L877
6L878
6L879
6L880
6L881
6L882
6L883
6L884
6L885
6L886
6L887
6L888
6L889
6L890
6L891
6L892
6L893
6L894
6L895
6L896
6L897
6L898
6L899
6L900
6L901
6L902
6L903
6L904
6L905
6L906
6L907
6L908
6L909
6L910
6L911
6L912
6L913
6L914
6L915
6L916
6L917
6L918
6L919
6L920
6L921
6L922
6L923
6L924
6L925
6L926
6L927
6L928
6L929
6L930
6L931
6L932
6L933
6L934
6L935
6L936
6L937
6L938
6L939
6L940
6L941
6L942
6L943
6L944
6L945
6L946
6L947
6L948
6L949
6L950
6L951
6L952
6L953
6L954
6L955
6L956
6L957
6L958
6L959
6L960
6L961
6L962
6L963
6L964
6L965
6L966
6L967
6L968
6L969
6L970
6L971
6L972
6L973
6L974
6L975
6L976
6L977
6L978
6L979
6L980
6L981
6L982
6L983
6L984
6L985
6L986
6L987
6L988
6L989
6L990
6L991
6L992
6L993
6L994
6L995
6L996
6L997
6L998
6L999
6L1000
6L1001
6L1002
6L1003
6L1004
6L1005
6L1006
6L1007
6L1008
6L1009
6L1010
6L1011
6L1012
6L1013
6L1014
6L1015
6L1016
6L1017
6L1018
6L1019
6L1020
6L1021
6L1022
6L1023
6L1024
6L1025
6L1026
6L1027
6L1028
6L1029
6L1030
6L1031
6L1032
6L1033
6L1034
6L1035
6L1036
6L1037
6L1038
6L1039
6L1040
6L1041
6L1042
6L1043
6L1044
6L1045
6L1046
6L1047
6L1048
6L1049
6L1050
6L1051
6L1052
6L1053
6L1054
6L1055
6L1056
6L1057
6L1058
6L1059
6L1060
6L1061
6L1062
6L1063
6L1064
6L1065
6L1066
6L1067
6L1068
6L1069
6L1070
6L1071
6L1072
6L1073
6L1074
6L1075
6L1076
6L1077
6L1078
6L1079
6L1080
6L1081
6L1082
6L1083
6L1084
6L1085
6L1086
6L1087
6L1088
6L1089
6L1090
6L1091
6L1092
6L1093
6L1094
6L1095
6L1096
6L1097
6L1098
6L1099
6L1100
6L1101
6L1102
6L1103
6L1104
6L1105
6L1106
6L1107
6L1108
6L1109
6L1110
6L1111
6L1112
6L1113
6L1114
6L1115
6L1116
6L1117
6L1118
6L1119
6L1120
6L1121
6L1122
6L1123
6L1124
6L1125
6L1126
6L1127
6L1128
6L1129
6L1130
6L1131
6L1132
6L1133
6L1134
6L1135
6L1136
6L1137
6L1138
6L1139
6L1140
6L1141
6L1142
6L1143
6L1144
6L1145
6L1146
6L1147
6L1148
6L1149
6L1150
6L1151
6L1152
6L1153
6L1154
6L1155
6L1156
6L1157
6L1158
6L1159
6L1160
6L1161
6L1162
6L1163
6L1164
6L1165
6L1166
6L1167
6L1168
6L1169
6L1170
6L1171
6L1172
6L1173
6L1174
6L1175
6L1176
6L1177
6L1178
6L1179
6L1180
6L1181
6L1182
6L1183
6L1184
6L1185
6L1186
6L1187
6L1188
6L1189
6L1190
6L1191
6L1192
6L1193
6L1194
6L1195
6L1196
6L1197
6L1198
6L1199
6L1200
6L1201
6L1202
6L1203
6L1204
6L1205
6L1206
6L1207
6L1208
6L1209
6L1210
6L1211
6L1212
6L1213
6L1214
6L1215
6L1216
6L1217
6L1218
6L1219
6L1220
6L1221
6L1222
6L1223
6L1224
6L1225
6L1226
6L1227
6L1228
6L1229
6L1230
6L1231
6L1232
6L1233
6L1234
6L1235
6L1236
6L1237
6L1238
6L1239
6L1240
6L1241
6L1242
6L1243
6L1244
6L1245
6L1246
6L1247
6L1248
6L1249
6L1250
6L1251
6L1252
6L1253
6L1254
6L1255
6L1256
6L1257
6L1258
6L1259
6L1260
6L1261
6L1262
6L1263
6L1264
6L1265
6L1266
6L1267
6L1268
6L1269
6L1270
6L1271
6L1272
6L1273
6L1274
6L1275
6L1276
6L1277
6L1278
6L1279
6L1280
6L1281
6L1282
6L1283
6L1284
6L1285
6L1286
6L1287
6L1288
6L1289
6L1290
6L1291
6L1292
6L1293
6L1294
6L1295
6L1296
6L1297
6L1298
6L1299
6L1300
6L1301
6L1302
6L1303
6L1304
6L1305
6L1306
6L1307
6L1308
6L1309
6L1310
6L1311
6L1312
6L1313
6L1314
6L1315
6L1316
6L1317
6L1318
6L1319
6L1320
6L1321
6L1322
6L1323
6L1324
6L1325
6L1326
6L1327
6L1328
6L1329
6L1330
6L1331
6L1332
6L1333
6L1334
6L1335
6L1336
6L1337
6L1338
6L1339
6L1340
6L1341
6L1342
6L1343
6L1344
6L1345
6L1346
6L1347
6L1348
6L1349
6L1350
6L1351
6L1352
6L1353
6L1354
6L1355
6L1356
6L1357
6L1358
6L1359
6L1360
6L1361
6L1362
6L1363
6L1364
6L1365
6L1366
6L1367
6L1368
6L1369
6L1370
6L1371
6L1372
6L1373
6L1374
6L1375
6L1376
6L1377
6L1378
6L1379
6L1380
6L1381
6L1382
6L1383
6L1384
6L1385
6L1386
6L1387
6L1388
6L1389
6L1390
6L1391
6L1392
6L1393
6L1394
6L1395
6L1396
6L1397
6L1398
6L1399
6L1400
6L1401
6L1402
6L1403
6L1404
6L1405
6L1406
6L1407
6L1408
6L1409
6L1410
6L1411
6L1412
6L1413
6L1414
6L1415
6L1416
6L1417
6L1418
6L1419
6L1420
6L1421
6L1422
6L1423
6L1424
6L1425
6L1426
6L1427
6L1428
6L1429
6L1430
6L1431
6L1432
6L1433
6L1434
6L1435
6L1436
6L1437
6L1438
6L1439
6L1440
6L1441
6L1442
6L1443
6L1444
6L1445
6L1446
6L1447
6L1448
6L1449
6L1450
6L1451
6L1452
6L1453
6L1454
6L1455
6L1456
6L1457
6L1458
6L1459
6L1460
6L1461
6L1462
6L1463
6L1464
6L1465
6L1466
6L1467
6L1468
6L1469
6L1470
6L1471
6L1472
6L1473
6L1474
6L1475
6L1476
6L1477
6L1478
6L1479
6L1480
6L1481
6L1482
6L1483
6L1484
6L1485
6L1486
6L1487
6L1488
6L1489
6L1490
6L1491
6L1492
6L1493
6L1494
6L1495
6L1496
6L1497
6L1498
6L1499
6L1500
6L1501
6L1502
6L1503
6L1504
6L1505
6L1506
6L1507
6L1508
6L1509
6L1510
6L1511
6L1512
6L1513
6L1514
6L1515
6L1516
6L1517
6L1518
6L1519
6L1520
6L1521
6L1522
6L1523
6L1524
6L1525
6L1526
6L1527
6L1528
6L1529
6L1530
6L1531
6L1532
6L1533
6L1534
6L1535
6L1536
6L1537
6L1538
6L1539
6L1540
6L1541
6L1542
6L1543
6L1544
6L1545
6L1546
6L1547
6L1548
6L1549
6L1550
6L1551
6L1552
6L1553
6L1554
6L1555
6L1556
6L1557
6L1558
6L1559
6L1560
6L1561
6L1562
6L1563
6L1564
6L1565
6L1566
6L1567
6L1568
6L1569
6L1570
6L1571
6L1572
6L1573
6L1574
6L1575
6L1576
6L1577
6L1578
6L1579
6L1580
6L1581
6L1582
6L1583
6L1584
6L1585
6L1586
6L1587
6L1588
6L1589
6L1590
6L1591
6L1592
6L1593
6L1594
6L1595
6L1596
6L1597
6L1598
6L1599
6L1600
6L1601
6L1602
6L1603
6L1604
6L1605
6L1606
6L1607
6L1608
6L1609
6L1610
6L1611
6L1612
6L1613
6L1614
6L1615
6L1616
6L1617
6L1618
6L1619
6L1620
6L1621
6L1622
6L1623
6L1624
6L1625
6L1626
6L1627
6L1628
6L1629
6L1630
6L1631
6L1632
6L1633
6L1634
6L1635
6L1636
6L1637
6L1638
6L1639
6L1640
6L1641
6L1642
6L1643
6L1644
6L1645
6L1646
6L1647
6L1648
6L1649
6L1650
6L1651
6L1652
6L1653
6L1654
6L1655
6L1656
6L1657
6L1658
6L1659
6L1660
6L1661
6L1662
6L1663
6L1664
6L1665
6L1666
6L1667
6L1668
6L1669
6L1670
6L1671
6L1672
6L1673
6L1674
6L1675
6L1676
6L1677
6L1678
6L1679
6L1680
6L1681
6L1682
6L1683
6L1684
6L1685
6L1686
6L1687
6L1688
6L1689
6L1690
6L1691
6L1692
6L1693
6L1694
6L1695
6L1696
6L1697
6L1698
6L1699
6L1700
6L1701
6L1702
6L1703
6L1704
6L1705
6L1706
6L1707
6L1708
6L1709
6L1710
6L1711
6L1712
6L1713
6L1714
6L1715
6L1716
6L1717
6L1718
6L1719
6L1720
6L1721
6L1722
6L1723
6L1724
6L1725
6L1726
6L1727
6L1728
6L1729
6L1730
6L1731
6L1732
6L1733
6L1734
6L1735
6L1736
6L1737
6L1738
6L1739
6L1740
6L1741
6L1742
6L1743
6L1744
6L1745
6L1746
6L1747
6L1748
6L1749
6L1750
6L1751
6L1752
6L1753
6L1754
6L1755
6L1756
6L1757
6L1758
6L1759
6L1760
6L1761
6L1762
6L1763
6L1764
6L1765
6L1766
6L1767
6L1768
6L1769
6L1770
6L1771
6L1772
6L1773
6L1774
6L1775
6L1776
6L1777
6L1778
6L1779
6L1780
6L1781
6L1782
6L1783
6L1784
6L1785
6L1786
6L1787
6L1788
6L1789
6L1790
6L1791
6L1792
6L1793
6L1794
6L1795
6L1796
6L1797
6L1798
6L1799
6L1800
6L1801
6L1802
6L1803
6L1804
6L1805
6L1806
6L1807
6L1808
6L1809
6L1810
6L1811
6L1812
6L1813
6L1814
6L1815
6L1816
6L1817
6L1818
6L1819
6L1820
6L1821
6L1822
6L1823
6L1824
6L1825
6L1826
6L1827
6L1828
6L1829
6L1830
6L1831
6L1832
6L1833
6L1834
6L1835
6L1836
6L1837
6L1838
6L1839
6L1840
6L1841
6L1842
6L1843
6L1844
6L1845
6L1846
6L1847
6L1848
6L1849
6L1850
6L1851
6L1852
6L1853
6L1854
6L1855
6L1856
6L1857
6L1858
6L1859
6L1860
6L1861
6L1862
6L1863
6L1864
6L1865
6L1866
6L1867
6L1868
6L1869
6L1870
6L1871
6L1872
6L1873
6L1874
6L1875
6L1876
6L1877
6L1878
6L1879
6L1880
6L1881
6L1882
6L1883
6L1884
6L1885
6L1886
6L1887
6L1888
6L1889
6L1890
6L1891
6L1892
6L1893
6L1894
6L1895
6L1896
6L1897
6L1898
6L1899
6L1900
6L1901
6L1902
6L1903
6L1904
6L1905
6L1906
6L1907
6L1908
6L1909
6L1910
6L1911
6L1912
6L1913
6L1914
6L1915
6L1916
6L1917
6L1918
6L1919
6L1920
6L1921
6L1922
6L1923
6L1924
6L1925
6L1926
6L1927
6L1928
6L1929
6L1930
6L1931
6L1932
6L1933
6L1934
6L1935
6L1936
6L1937
6L1938
6L1939
6L1940
6L1941
6L1942
6L1943
6L1944
6L1945
6L1946
6L1947
6L1948
6L1949
6L1950
6L1951
6L1952
6L1953
6L1954
6L1955
6L1956
6L1957
6L1958
6L1959
6L1960
6L1961
6L1962
6L1963
6L1964
6L1965
6L1966
6L1967
6L1968
6L1969
6L1970
6L1971
6L1972
6L1973
6L1974
6L1975
6L1976
6L1977
6L1978
6L1979
6L1980
6L1981
6L1982
6L1983
6L1984
6L1985
6L1986
6L1987
6L1988
6L1989
6L1990
6L1991
6L1992
6L1993
6L1994
6L1995
6L1996
6L1997
6L1998
6L1999
6L2000
6L2001
6L2002
6L2003
6L2004
6L2005
6L2006
6L2007
6L2008
6L2009
6L2010
6L2011
6L2012
6L2013
6L2014
6L2015
6L2016
6L2017
6L2018
6L2019
6L2020
6L2021
6L2022
6L2023
6L2024
6L2025
6L2026
6L2027
6L2028
6L2029
6L2030
6L2031
6L2032
6L2033
6L2034
6L2035
6L2036
6L2037
6L2038
6L2039
6L2040
6L2041
6L2042
6L2043
6L2044
6L2045
6L2046
6L2047
6L2048
6L2049
6L2050
6L2051
6L2052
6L2053
6L2054
6L2055
6L2056
6L2057
6L2058
6L2059
6L2060
6L2061
6L2062
6L2063
6L2064
6L2065
6L2066
6L2067
6L2068
6L2069
6L2070
6L2071
6L2072
6L2073
6L2074
6L2075
6L2076
6L2077
6L2078
6L2079
6L2080
6L2081
6L2082
6L2083
6L2084
6L2085
6L2086
6L2087
6L2088
6L2089
6L2090
6L2091
6L2092
6L2093
6L2094
6L2095
6L2096
6L2097
6L2098
6L2099
6L2100
6L2101
6L2102
6L2103
6L2104
6L2105
6L2106
6L2107
6L2108
6L2109
6L2110
6L2111
6L2112
6L2113
6L2114
6L2115
6L2116
6L2117
6L2118
6L2119
6L2120
6L2121
6L2122
6L2123
6L2124
6L2125
6L2126
6L2127
6L2128
6L2129
6L2130
6L2131
6L2132
6L2133
6L2134
6L2135
6L2136
6L2137
6L2138
6L2139
6L2140
6L2141
6L2142
6L2143
6L2144
6L2145
6L2146
6L2147
6L2148
6L2149
6L2150
6L2151
6L2152
6L2153
6L2154
6L2155
6L2156
6L2157
6L2158
6L2159
6L2160
6L2161
6L2162
6L2163
6L2164
6L2165
6L2166
6L2167
6L2168
6L2169
6L2170
6L2171
6L2172
6L2173
6L2174
6L2175
6L2176
6L2177
6L2178
6L2179
6L2180
6L2181
6L2182
6L2183
6L2184
6L2185
6L2186
6L2187
6L2188
6L2189
6L2190
6L2191
6L2192
6L2193
6L2194
6L2195
6L2196
6L2197
6L2198
6L2199
6L2200
6L2201
6L2202
6L2203
6L2204
6L2205
6L2206
6L2207
6L2208
6L2209
6L2210
6L2211
6L2212
6L2213
6L2214
6L2215
6L2216
6L2217
6L2218
6L2219
6L2220
6L2221
6L2222
6L2223
6L2224
6L2225
6L2226
6L2227
6L2228
6L2229
6L2230
6L2231
6L2232
6L2233
6L2234
6L2235
6L2236
6L2237
6L2238
6L2239
6L2240
6L2241
6L2242
6L2243
6L2244
6L2245
6L2246
6L2247
6L2248
6L2249
6L2250
6L2251
6L2252
6L2253
6L2254
6L2255
6L2256
6L2257
6L2258
6L2259
6L2260
6L2261
6L2262
6L2263
6L2264
6L2265
6L2266
6L2267
6L2268
6L2269
6L2270
6L2271
6L2272
6L2273
6L2274
6L2275
6L2276
6L2277
6L2278
6L2279
6L2280
6L2281
6L2282
6L2283
6L2284
6L2285
6L2286
6L2287
6L2288
6L2289
6L2290
6L2291
6L2292
6L2293
6L2294
6L2295
6L2296
6L2297
6L2298
6L2299
6L2300
6L2301
6L2302
6L2303
6L2304
6L2305
6L2306
6L2307
6L2308
6L2309
6L2310
6L2311
6L2312
6L2313
6L2314
6L2315
6L2316
6L2317
6L2318
6L2319
6L2320
6L2321
6L2322
6L2323
6L2324
6L2325
6L2326
6L2327
6L2328
6L2329
6L2330
6L2331
6L2332
6L2333
6L2334
6L2335
6L2336
6L2337
6L2338
6L2339
6L2340
6L2341
6L2342
6L2343
6L2344
6L2345
6L2346
6L2347
6L2348
6L2349
6L2350
6L2351
6L2352
6L2353
6L2354
6L2355
6L2356
6L2357
6L2358
6L2359
6L2360
6L2361
6L2362
6L2363
6L2364
6L2365
6L2366
6L2367
6L2368
6L2369
6L2370
6L2371
6L2372
6L2373
6L2374
6L2375
6L2376
6L2377
6L2378
6L2379
6L2380
6L2381
6L2382
6L2383
6L2384
6L2385
6L2386
6L2387
6L2388
6L2389
6L2390
6L2391
6L2392
6L2393
6L2394
6L2395
6L2396
6L2397
6L2398
6L2399
6L2400
6L2401
6L2402
6L2403
6L2404
6L2405
6L2406
6L2407
6L2408
6L2409
6L2410
6L2411
6L2412
6L2413
6L2414
6L2415
6L2416
6L2417
6L2418
6L2419
6L2420
6L2421
6L2422
6L2423
6L2424
6L2425
6L2426
6L2427
6L2428
6L2429
6L2430
6L2431
6L2432
6L2433
6L2434
6L2435
6L2436
6L2437
6L2438
6L2439
6L2440
6L2441
6L2442
6L2443
6L2444
6L2445
6L2446
6L2447
6L2448
6L2449
6L2450
6L2451
6L2452
6L2453
6L2454
6L2455
6L2456
6L2457
6L2458
6L2459
6L2460
6L2461
6L2462
6L2463
6L2464
6L2465
6L2466
6L2467
6L2468
6L2469
6L2470
6L2471
6L2472
6L2473
6L2474
6L2475
6L2476
6L2477
6L2478
6L2479
6L2480
6L2481
6L2482
6L2483
6L2484
6L2485
6L2486
6L2487
6L2488
6L2489
6L2490
6L2491
6L2492
6L2493
6L2494
6L2495
6L2496
6L2497
6L2498
6L2499
6L2500
6L2501
6L2502
6L2503
6L2504
6L2505
6L2506
6L2507
6L2508
6L2509
6L2510
6L2511
6L2512
6L2513
6L2514
6L2515
6L2516
6L2517
6L2518
6L2519
6L2520
6L2521
6L2522
6L2523
6L2524
6L2525
6L2526
6L2527
6L2528
6L2529
6L2530
6L2531
6L2532
6L2533
6L2534
6L2535
6L2536
6L2537
6L2538
6L2539
6L2540
6L2541
6L2542
6L2543
6L2544
6L2545
6L2546
6L2547
6L2548
6L2549
6L2550
6L2551
6L2552
6L2553
6L2554
6L2555
6L2556
6L2557
6L2558
6L2559
6L2560
6L2561
6L2562
6L2563
6L2564
6L2565
6L2566
6L2567
6L2568
6L2569
6L2570
6L2571
6L2572
6L2573
6L2574
6L2575
6L2576
6L2577
6L2578
6L2579
6L2580
6L2581
6L2582
6L2583
6L2584
6L2585
6L2586
6L2587
6L2588
6L2589
6L2590
6L2591
6L2592
6L2593
6L2594
6L2595
6L2596
6L2597
6L2598
6L2599
6L2600
6L2601
6L2602
6L2603
6L2604
6L2605
6L2606
6L2607
6L2608
6L2609
6L2610
6L2611
6L2612
6L2613
6L2614
6L2615
6L2616
6L2617
6L2618
6L2619
6L2620
6L2621
6L2622
6L2623
6L2624
6L2625
6L2626
6L2627
6L2628
6L2629
6L2630
6L2631
6L2632
6L2633
6L2634
6L2635
6L2636
6L2637
6L2638
6L2639
6L2640
6L2641
6L2642
6L2643
6L2644
6L2645
6L2646
6L2647
6L2648
6L2649
6L2650
6L2651
6L2652
6L2653
6L2654
6L2655
6L2656
6L2657
6L2658
6L2659
6L2660
6L2661
6L2662
6L2663
6L2664
6L2665
6L2666
6L2667
6L2668
6L2669
6L2670
6L2671
6L2672
6L2673
6L2674
6L2675
6L2676
6L2677
6L2678
6L2679
6L2680
6L2681
6L2682
6L2683
6L2684
6L2685
6L2686
6L2687
6L2688
6L2689
6L2690
6L2691
6L2692
6L2693
6L2694
6L2695
6L2696
6L2697
6L2698
6L2699
6L2700
6L2701
6L2702
6L2703
6L2704
6L2705
6L2706
6L2707
6L2708
6L2709
6L2710
6L2711
6L2712
6L2713
6L2714
6L2715
6L2716
6L2717
6L2718
6L2719
6L2720
6L2721
6L2722
6L2723
6L2724
6L2725
6L2726
6L2727
6L2728
6L2729
6L2730
6L2731
6L2732
6L2733
6L2734
6L2735
6L2736
6L2737
6L2738
6L2739
6L2740
6L2741
6L2742
6L2743
6L2744
6L2745
6L2746
6L2747
6L2748
6L2749
6L2750
6L2751
6L2752
6L2753
6L2754
6L2755
6L2756
6L2757
6L2758
6L2759
6L2760
6L2761
6L2762
6L2763
6L2764
6L2765
6L2766
6L2767
6L2768
6L2769
6L2770
6L2771
6L2772
6L2773
6L2774
6L2775
6L2776
6L2777
6L2778
6L2779
6L2780
6L2781
6L2782
6L2783
6L2784
6L2785
6L2786
6L2787
6L2788
6L2789
6L2790
6L2791
6L2792
6L2793
6L2794
6L2795
6L2796
6L2797
6L2798
6L2799
6L2800
6L2801
6L2802
6L2803
6L2804
6L2805
6L2806
6L2807
6L2808
6L2809
6L2810
6L2811
6L2812
6L2813
6L2814
6L2815
6L2816
6L2817
6L2818
6L2819
6L2820
6L2821
6L2822
6L2823
6L2824
6L2825
6L2826
6L2827
6L2828
6L2829
6L2830
6L2831
6L2832
6L2833
6L2834
6L2835
6L2836
6L2837
6L2838
6L2839
6L2840
6L2841
6L2842
6L2843
6L2844
6L2845
6L2846
6L2847
6L2848
6L2849
6L2850
6L2851
6L2852
6L2853
6L2854
6L2855
6L2856
6L2857
6L2858
6L2859
6L2860
6L2861
6L2862
6L2863
6L2864
6L2865
6L2866
6L2867
6L2868
6L2869
6L2870
6L2871
6L2872
6L2873
6L2874
6L2875
6L2876
6L2877
6L2878
6L2879
6L2880
6L2881
6L2882
6L2883
6L2884
6L2885
6L2886
6L2887
6L2888
6L2889
6L2890
6L2891
6L2892
6L2893
6L2894
6L2895
6L2896
6L2897
6L2898
6L2899
6L2900
6L2901
6L2902
6L2903
6L2904
6L2905
6L2906
6L2907
6L2908
6L2909
6L2910
6L2911
6L2912
6L2913
6L2914
6L2915
6L2916
6L2917
6L2918
6L2919
6L2920
6L2921
6L2922
6L2923
6L2924
6L2925
6L2926
6L2927
6L2928
6L2929
6L2930
6L2931
6L2932
6L2933
6L2934
6L2935
6L2936
6L2937
6L2938
6L2939
6L2940
6L2941
6L2942
6L2943
6L2944
6L2945
6L2946
6L2947
6L2948
6L2949
6L2950
6L2951
6L2952
6L2953
6L2954
6L2955
6L2956
6L2957
6L2958
6L2959
6L2960
6L2961
6L2962
6L2963
6L2964
6L2965
6L2966
6L2967
6L2968
6L2969
6L2970
6L2971
6L2972
6L2973
6L2974
6L2975
6L2976
6L2977
6L2978
6L2979
6L2980
6L2981
6L2982
6L2983
6L2984
6L2985
6L2986
6L2987
6L2988
6L2989
6L2990
6L2991
6L2992
6L2993
6L2994
6L2995
6L2996
6L2997
6L2998
6L2999
6L3000
6L3001
6L3002
6L3003
6L3004
6L3005
6L3006
6L3007
6L3008
6L3009
6L3010
6L3011
6L3012
6L3013
6L3014
6L3015
6L3016
6L3017
6L3018
6L3019
6L3020
6L3021
6L3022
6L3023
6L3024
6L3025
6L3026
6L3027
6L3028
6L3029
6L3030
6L3031
6L3032
6L3033
6L3034
6L3035
6L3036
6L3037
6L3038
6L3039
6L3040
6L3041
6L3042
6L3043
6L3044
6L3045
6L3046
6L3047
6L3048
6L3049
6L3050
6L3051
6L3052
6L3053
6L3054
6L3055
6L3056
6L3057
6L3058
6L3059
6L3060
6L3061
6L3062
6L3063
6L3064
6L3065
6L3066
6L3067
6L3068
6L3069
6L3070
6L3071
6L3072
6L3073
6L3074
6L3075
6L3076
6L3077
6L3078
6L3079
6L3080
6L3081
6L3082
6L3083
6L3084
6L3085
6L3086
6L3087
6L3088
6L3089
6L3090
6L3091
6L3092
6L3093
6L3094
6L3095
6L3096
6L3097
6L3098
6L3099
6L3100
6L3101
6L3102
6L3103
6L3104
6L3105
6L3106
6L3107
6L3108
6L3109
6L3110
6L3111
6L3112
6L3113
6L3114
6L3115
6L3116
6L3117
6L3118
6L3119
6L3120
6L3121
6L3122
6L3123
6L3124
6L3125
6L3126
6L3127
6L3128
6L3129
6L3130
6L3131
6L3132
6L3133
6L3134
6L3135
6L3136
6L3137
6L3138
6L3139
6L3140
6L3141
6L3142
6L3143
6L3144
6L3145
6L3146
6L3147
6L3148
6L3149
6L3150
6L3151
6L3152
6L3153
6L3154
6L3155
6L3156
6L3157
6L3158
6L3159
6L3160
6L3161
6L3162
6L3163
6L3164
6L3165
6L3166
6L3167
6L3168
6L3169
6L3170
6L3171
6L3172
6L3173
6L3174
6L3175
6L3176
6L3177
6L3178
6L3179
6L3180
6L3181
6L3182
6L3183

Figure A6-43 : 2019 Summer Peak Post-Project Alternative 2 Case B - Contingency of 9L20 (Nevis 766S - Cordel 755S)

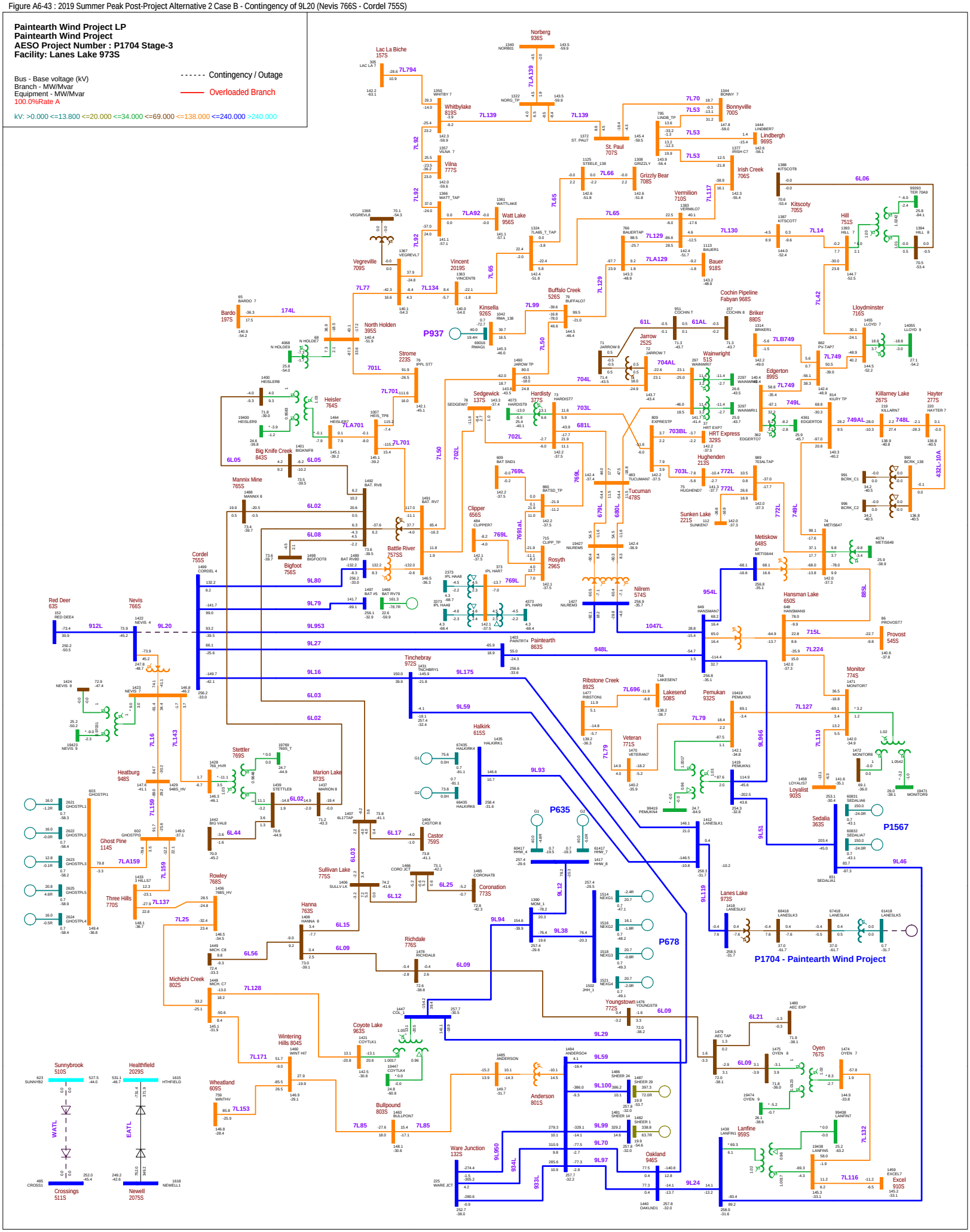

Figure A6-44 : 2019 Summer Peak Post-Project Alternative 2 Case B - Contingency of 9L29 (Oakland 946S - Coyote Lake 963S)

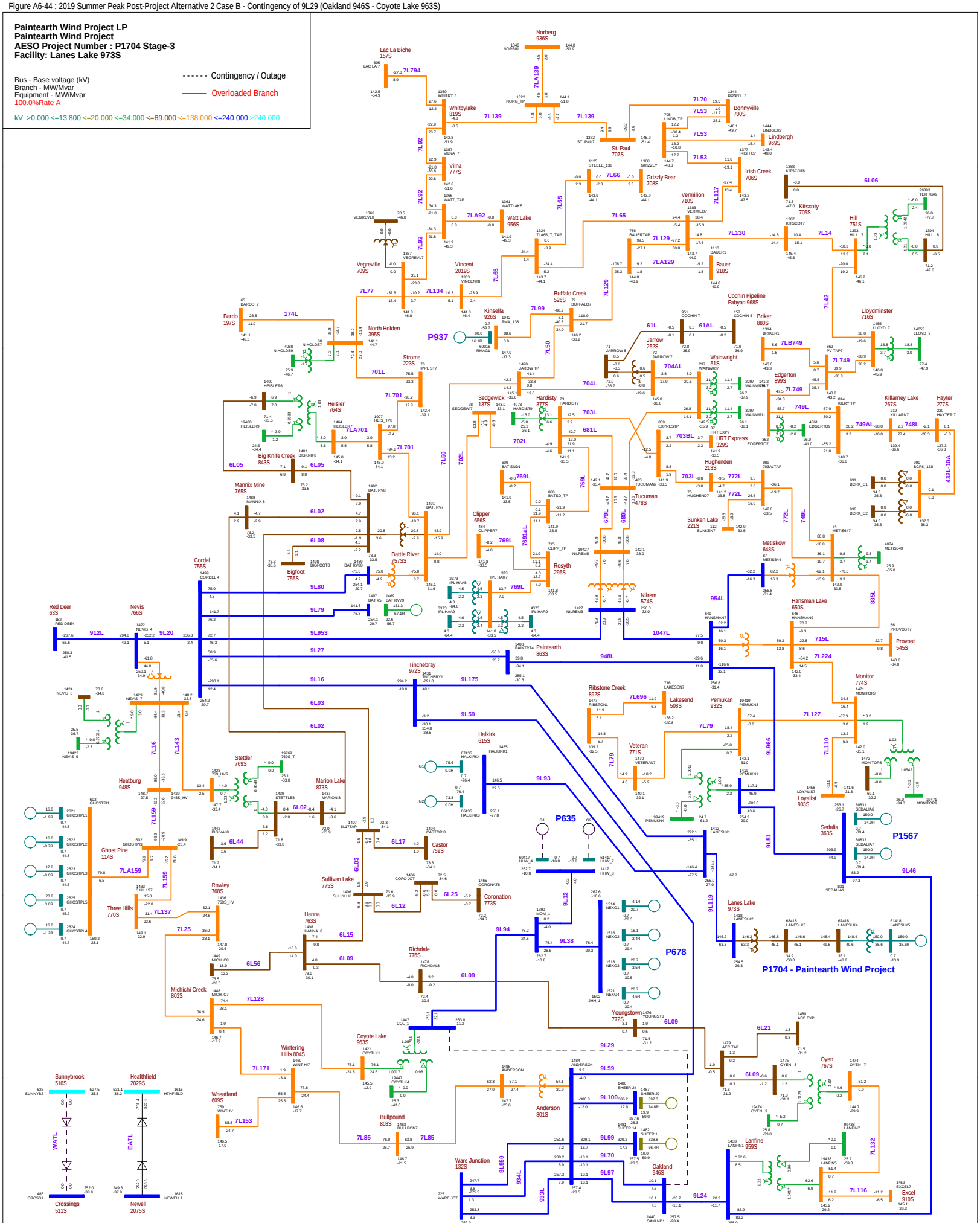

Figure A6-45 : 2019 Summer Peak Post-Project Alternative 2 Case B - Contingency of 9L46 (Lanfine 959S - Sedalia 363S)

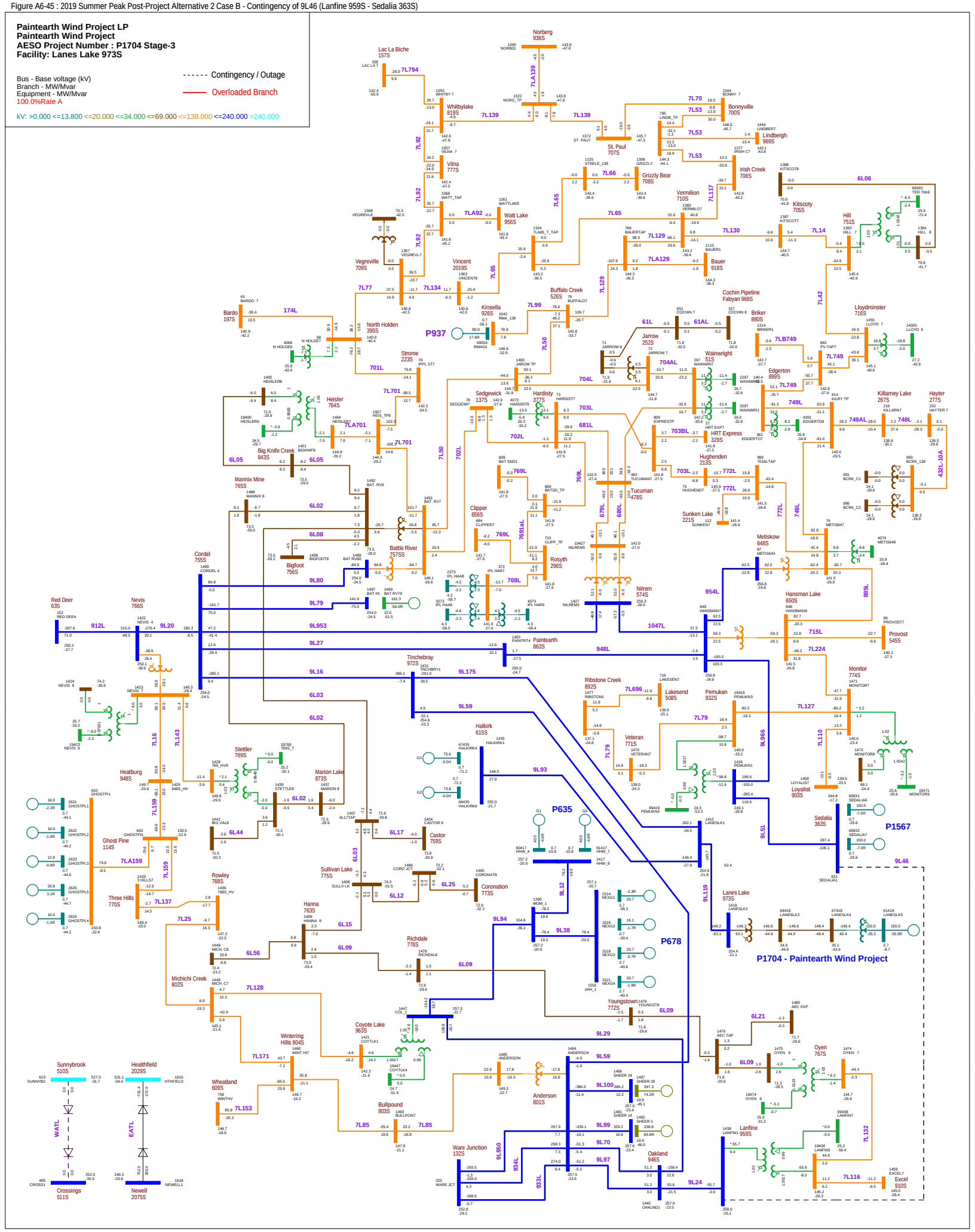
Paintearth Wind Project LP
Paintearth Wind Project
AESO Project Number : P1704 Stage-3
Facility: Lanes Lake 973S
Bus - Base voltage (kV)
Branch - MW/Mvar
Equipment - MW/Mvar
100.0%Rate A
Contingency / Outage
Overloaded Branch
kV: >0.000 <=13.800 <=20.000 <=34.000 <=69.000 <=138.000 <=240.000 >240.000
Norberg 936S
Lac La Biche 157S
Whitbylake 819S
Vilna 777S
Watt Lake 956S
Vegreville 709S
Vincent 2019S
Kinsella 926S
Buffalo Creek 526S
St. Paul 707S
Vermilion 710S
Grizzly Bear 708S
Bonnyville 700S
Lindbergh 969S
Irish Creek 706S
Kitscoty 705S
Hill 751S
Lloydminster 716S
Bardo 197S
North Holden 395S
P937
Strome 223S
Heisler 764S
Big Knife Creek 843S
Mannix Mine 765S
Cordel 755S
Bigfoot 756S
Battle River 757SS
Sedgewick 137S
Hardisty 377S
Jarrow 252S
Wainwright 51S
Edgerton 899S
Killarney Lake 267S
Hayter 277S
Briker 880S
Cochin Pipeline Fabyan 968S
HRT Express 329S
Hughenden 213S
Tucumar 478S
Clipper 656S
Rosyth 296S
Nilrem 574S
Sunken Lake 221S
Metiskow 648S
Hansman Lake 650S
Provost 545S
Red Deer 63S
Nevis 766S
Tinchebray 972S
Paintearth 863S
Ribstone Creek 892S
Lakesend 508S
Pemukan 932S
Monitor 774S
Heatburg 948S
Stettler 769S
Marion Lake 873S
Halkirk 615S
Veteran 771S
Loyalist 903S
Sedalia 363S
P1567
Ghost Pine 114S
Rowley 768S
Three Hills 770S
Sullivan Lake 775S
Hanna 763S
Richdale 776S
Castor 759S
Coronation 773S
Michichi Creek 802S
Lanes Lake 973S
P635
P678
P1704 - Paintearth Wind Project
Youngstown 772S
Oyen 767S
Anderson 801S
Oakland 946S
Lanfine 959S
Excel 910S
Coyote Lake 963S
Wintering Hills 804S
Wheatland 609S
Bullpound 803S
Ware Junction 132S
Sunnybrook 510S
Healthfield 2029S
Crossings 511S
Newell 2075S
WATL
EATL
912L
1047L
954L
885L
P500
P501
P502
P503
P504
P505
P506
P507
P508
P509
P510
P511
P512
P513
P514
P515
P516
P517
P518
P519
P520
P521
P522
P523
P524
P525
P526
P527
P528
P529
P530
P531
P532
P533
P534
P535
P536
P537
P538
P539
P540
P541
P542
P543
P544
P545
P546
P547
P548
P549
P550
P551
P552
P553
P554
P555
P556
P557
P558
P559
P560
P561
P562
P563
P564
P565
P566
P567
P568
P569
P570
P571
P572
P573
P574
P575
P576
P577
P578
P579
P580
P581
P582
P583
P584
P585
P586
P587
P588
P589
P590
P591
P592
P593
P594
P595
P596
P597
P598
P599
P600
P601
P602
P603
P604
P605
P606
P607
P608
P609
P610
P611
P612
P613
P614
P615
P616
P617
P618
P619
P620
P621
P622
P623
P624
P625
P626
P627
P628
P629
P630
P631
P632
P633
P634
P635
P636
P637
P638
P639
P640
P641
P642
P643
P644
P645
P646
P647
P648
P649
P650
P651
P652
P653
P654
P655
P656
P657
P658
P659
P660
P661
P662
P663
P664
P665
P666
P667
P668
P669
P670
P671
P672
P673
P674
P675
P676
P677
P678
P679
P680
P681
P682
P683
P684
P685
P686
P687
P688
P689
P690
P691
P692
P693
P694
P695
P696
P697
P698
P699
P700
P701
P702
P703
P704
P705
P706
P707
P708
P709
P710
P711
P712
P713
P714
P715
P716
P717
P718
P719
P720
P721
P722
P723
P724
P725
P726
P727
P728
P729
P730
P731
P732
P733
P734
P735
P736
P737
P738
P739
P740
P741
P742
P743
P744
P745
P746
P747
P748
P749
P750
P751
P752
P753
P754
P755
P756
P757
P758
P759
P760
P761
P762
P763
P764
P765
P766
P767
P768
P769
P770
P771
P772
P773
P774
P775
P776
P777
P778
P779
P780
P781
P782
P783
P784
P785
P786
P787
P788
P789
P790
P791
P792
P793
P794
P795
P796
P797
P798
P799
P800
P801
P802
P803
P804
P805
P806
P807
P808
P809
P810
P811
P812
P813
P814
P815
P816
P817
P818
P819
P820
P821
P822
P823
P824
P825
P826
P827
P828
P829
P830
P831
P832
P833
P834
P835
P836
P837
P838
P839
P840
P841
P842
P843
P844
P845
P846
P847
P848
P849
P850
P851
P852
P853
P854
P855
P856
P857
P858
P859
P860
P861
P862
P863
P864
P865
P866
P867
P868
P869
P870
P871
P872
P873
P874
P875
P876
P877
P878
P879
P880
P881
P882
P883
P884
P885
P886
P887
P888
P889
P890
P891
P892
P893
P894
P895
P896
P897
P898
P899
P900
P901
P902
P903
P904
P905
P906
P907
P908
P909
P910
P911
P912
P913
P914
P915
P916
P917
P918
P919
P920
P921
P922
P923
P924
P925
P926
P927
P928
P929
P930
P931
P932
P933
P934
P935
P936
P937
P938
P939
P940
P941
P942
P943
P944
P945
P946
P947
P948
P949
P950
P951
P952
P953
P954
P955
P956
P957
P958
P959
P960
P961
P962
P963
P964
P965
P966
P967
P968
P969
P970
P971
P972
P973
P974
P975
P976
P977
P978
P979
P980
P981
P982
P983
P984
P985
P986
P987
P988
P989
P990
P991
P992
P993
P994
P995
P996
P997
P998
P999
P1000
P1001
P1002
P1003
P1004
P1005
P1006
P1007
P1008
P1009
P1010
P1011
P1012
P1013
P1014
P1015
P1016
P1017
P1018
P1019
P1020
P1021
P1022
P1023
P1024
P1025
P1026
P1027
P1028
P1029
P1030
P1031
P1032
P1033
P1034
P1035
P1036
P1037
P1038
P1039
P1040
P1041
P1042
P1043
P1044
P1045
P1046
P1047
P1048
P1049
P1050
P1051
P1052
P1053
P1054
P1055
P1056
P1057
P1058
P1059
P1060
P1061
P1062
P1063
P1064
P1065
P1066
P1067
P1068
P1069
P1070
P1071
P1072
P1073
P1074
P1075
P1076
P1077
P1078
P1079
P1080
P1081
P1082
P1083
P1084
P1085
P1086
P1087
P1088
P1089
P1090
P1091
P1092
P1093
P1094
P1095
P1096
P1097
P1098
P1099
P1100
P1101
P1102
P1103
P1104
P1105
P1106
P1107
P1108
P1109
P1110
P1111
P1112
P1113
P1114
P1115
P1116
P1117
P1118
P1119
P1120
P1121
P1122
P1123
P1124
P1125
P1126
P1127
P1128
P1129
P1130
P1131
P1132
P1133
P1134
P1135
P1136
P1137
P1138
P1139
P1140
P1141
P1142
P1143
P1144
P1145
P1146
P1147
P1148
P1149
P1150
P1151
P1152
P1153
P1154
P1155
P1156
P1157
P1158
P1159
P1160
P1161
P1162
P1163
P1164
P1165
P1166
P1167
P1168
P1169
P1170
P1171
P1172
P1173
P1174
P1175
P1176
P1177
P1178
P1179
P1180
P1181
P1182
P1183
P1184
P1185
P1186
P1187
P1188
P1189
P1190
P1191
P1192
P1193
P1194
P1195
P1196
P1197
P1198
P1199
P1200
P1201
P1202
P1203
P1204
P1205
P1206
P1207
P1208
P1209
P1210
P1211
P1212
P1213
P1214
P1215
P1216
P1217
P1218
P1219
P1220
P1221
P1222
P1223
P1224
P1225
P1226
P1227
P1228
P1229
P1230
P1231
P1232
P1233
P1234
P1235
P1236
P1237
P1238
P1239
P1240
P1241
P1242
P1243
P1244
P1245
P1246
P1247
P1248
P1249
P1250
P1251
P1252
P1253
P1254
P1255
P1256
P1257
P1258
P1259
P1260
P1261
P1262
P1263
P1264
P1265
P1266
P1267
P1268
P1269
P1270
P1271
P1272
P1273
P1274
P1275
P1276
P1277
P1278
P1279
P1280
P1281
P1282
P1283
P1284
P1285
P1286
P1287
P1288
P1289
P1290
P1291
P1292
P1293
P1294
P1295
P1296
P1297
P1298
P1299
P1300
P1301
P1302
P1303
P1304
P1305
P1306
P1307
P1308
P1309
P1310
P1311
P1312
P1313
P1314
P1315
P1316
P1317
P1318
P1319
P1320
P1321
P1322
P1323
P1324
P1325
P1326
P1327
P1328
P1329
P1330
P1331
P1332
P1333
P1334
P1335
P1336
P1337
P1338
P1339
P1340
P1341
P1342
P1343
P1344
P1345
P1346
P1347
P1348
P1349
P1350
P1351
P1352
P1353
P1354
P1355
P1356
P1357
P1358
P1359
P1360
P1361
P1362
P1363
P1364
P1365
P1366
P1367
P1368
P1369
P1370
P1371
P1372
P1373
P1374
P1375
P1376
P1377
P1378
P1379
P1380
P1381
P1382
P1383
P1384
P1385
P1386
P1387
P1388
P1389
P1390
P1391
P1392
P1393
P1394
P1395
P1396
P1397
P1398
P1399
P1400
P1401
P1402
P1403
P1404
P1405
P1406
P1407
P1408
P1409
P1410
P1411
P1412
P1413
P1414
P1415
P1416
P1417
P1418
P1419
P1420
P1421
P1422
P1423
P1424
P1425
P1426
P1427
P1428
P1429
P1430
P1431
P1432
P1433
P1434
P1435
P1436
P1437
P1438
P1439
P1440
P1441
P1442
P1443
P1444
P1445
P1446
P1447
P1448
P1449
P1450
P1451
P1452
P1453
P1454
P1455
P1456
P1457
P1458
P1459
P1460
P1461
P1462
P1463
P1464
P1465
P1466
P1467
P1468
P1469
P1470
P1471
P1472
P1473
P1474
P1475
P1476
P1477
P1478
P1479
P1480
P1481
P1482
P1483
P1484
P1485
P1486
P1487
P1488
P1489
P1490
P1491
P1492
P1493
P1494
P1495
P1496
P1497
P1498
P1499
P1500
P1501
P1502
P1503
P1504
P1505
P1506
P1507
P1508
P1509
P1510
P1511
P1512
P1513
P1514
P1515
P1516
P1517
P1518
P1519
P1520
P1521
P1522
P1523
P1524
P1525
P1526
P1527
P1528
P1529
P1530
P1531
P1532
P1533
P1534
P1535
P1536
P1537
P1538
P1539
P1540
P1541
P1542
P1543
P1544
P1545
P1546
P1547
P1548
P1549
P1550
P1551
P1552
P1553
P1554
P1555
P1556
P1557
P1558
P1559
P1560
P1561
P1562
P1563
P1564
P1565
P1566
P1567
P1568
P1569
P1570
P1571
P1572
P1573
P1574
P1575
P1576
P1577
P1578
P1579
P1580
P1581
P1582
P1583
P1584
P1585
P1586
P1587
P1588
P1589
P1590
P1591
P1592
P1593
P1594
P1595
P1596
P1597
P1598
P1599
P1600
P1601
P1602
P1603
P1604
P1605
P1606
P1607
P1608
P1609
P1610
P1611
P1612
P1613
P1614
P1615
P1616
P1617
P1618
P1619
P1620
P1621
P1622
P1623
P1624
P1625
P1626
P1627
P1628
P1629
P1630
P1631
P1632
P1633
P1634
P1635
P1636
P1637
P1638
P1639
P1640
P1641
P1642
P1643
P1644
P1645
P1646
P1647
P1648
P1649
P1650
P1651
P1652
P1653
P1654
P1655
P1656
P1657
P1658
P1659
P1660
P1661
P1662
P1663
P1664
P1665
P1666
P1667
P1668
P1669
P1670
P1671
P1672
P1673
P1674
P1675
P1676
P1677
P1678
P1679
P1680
P1681
P1682
P1683
P1684
P1685
P1686
P1687
P1688
P1689
P1690
P1691
P1692
P1693
P1694
P1695
P1696
P1697
P1698
P1699
P1700
P1701
P1702
P1703
P1704
P1705
P1706
P1707
P1708
P1709
P1710
P1711
P1712
P1713
P1714
P1715
P1716
P1717
P1718
P1719
P1720
P1721
P1722
P1723
P1724
P1725
P1726
P1727
P1728
P1729
P1730
P1731
P1732
P1733
P1734
P1735
P1736
P1737
P1738
P1739
P1740
P1741
P1742
P1743
P1744
P1745
P1746
P1747
P1748
P1749
P1750
P1751
P1752
P1753
P1754
P1755
P1756
P1757
P1758
P1759
P1760
P1761
P1762
P1763
P1764
P1765
P1766
P1767
P1768
P1769
P1770
P1771
P1772
P1773
P1774
P1775
P1776
P1777
P1778
P1779
P1780
P1781
P1782
P1783
P1784
P1785
P1786
P1787
P1788
P1789
P1790
P1791
P1792
P1793
P1794
P1795
P1796
P1797
P1798
P1799
P1800
P1801
P1802
P1803
P1804
P1805
P1806
P1807
P1808
P1809
P1810
P1811
P1812
P1813
P1814
P1815
P1816
P1817
P1818
P1819
P1820
P1821
P1822
P1823
P1824
P1825
P1826
P1827
P1828
P1829
P1830
P1831
P1832
P1833
P1834
P1835
P1836
P1837
P1838
P1839
P1840
P1841
P1842
P1843
P1844
P1845
P1846
P1847
P1848
P1849
P1850
P1851
P1852
P1853
P1854
P1855
P1856
P1857
P1858
P1859
P1860
P1861
P1862
P1863
P1864
P1865
P1866
P1867
P1868
P1869
P1870
P1871
P1872
P1873
P1874
P1875
P1876
P1877
P1878
P1879
P1880
P1881
P1882
P1883
P1884
P1885
P1886
P1887
P1888
P1889
P1890
P1891
P1892
P1893
P1894
P1895
P1896
P1897
P1898
P1899
P1900
P1901
P1902
P1903
P1904
P1905
P1906
P1907
P1908
P1909
P1910
P1911
P1912
P1913
P1914
P1915
P1916
P1917
P1918
P1919
P1920
P1921
P1922
P1923
P1924
P1925
P1926
P1927
P1928
P1929
P1930
P1931
P1932
P1933
P1934
P1935
P1936
P1937
P1938
P1939
P1940
P1941
P1942
P1943
P1944
P1945
P1946
P1947
P1948
P1949
P1950
P1951
P1952
P1953
P1954
P1955
P1956
P1957
P1958
P1959
P1960
P1961
P1962
P1963
P1964
P1965
P1966
P1967
P1968
P1969
P1970
P1971
P1972
P1973
P1974
P1975
P1976
P1977
P1978
P1979
P1980
P1981
P1982
P1983
P1984
P1985
P1986
P1987
P1988
P1989
P1990
P1991
P1992
P1993
P1994
P1995
P1996
P1997
P1998
P1999
P2000
P2001
P2002
P2003
P2004
P2005
P2006
P2007
P2008
P2009
P2010
P2011
P2012
P2013
P2014
P2015
P2016
P2017
P2018
P2019
P2020
P2021
P2022
P2023
P2024
P2025
P2026
P2027
P2028
P2029
P2030
P2031
P2032
P2033
P2034
P2035
P2036
P2037
P2038
P2039
P2040
P2041
P2042
P2043
P2044
P2045
P2046
P2047
P2048
P2049
P2050
P2051
P2052
P2053
P2054
P2055
P2056
P2057
P2058
P2059
P2060
P2061
P2062
P2063
P2064
P2065
P2066
P2067
P2068
P2069
P2070
P2071
P2072
P2073
P2074
P2075
P2076
P2077
P2078
P2079
P2080
P2081
P2082
P2083
P2084
P2085
P2086
P2087
P2088
P2089
P2090
P2091
P2092
P2093
P2094
P2095
P2096
P2097
P2098
P2099
P2100
P2101
P2102
P2103
P2104
P2105
P2106
P2107
P2108
P2109
P2110
P2111
P2112
P2113
P2114
P2115
P2116
P2117
P2118
P2119
P2120
P2121
P2122
P2123
P2124
P2125
P2126
P2127
P2128
P2129
P2130
P2131
P2132
P2133
P2134
P2135
P2136
P2137
P2138
P2139
P2140
P2141
P2142
P2143
P2144
P2145
P2146
P2147
P2148
P2149
P2150
P2151
P2152
P2153
P2154
P2155
P2156
P2157
P2158
P2159
P2160
P2161
P2162
P2163
P2164
P2165
P2166
P2167
P2168
P2169
P2170
P2171
P2172
P2173
P2174
P2175
P2176
P2177
P2178
P2179
P2180
P2181
P2182
P2183
P2184
P2185
P2186
P2187
P2188
P2189
P2190
P2191
P2192
P2193
P2194
P2195
P2196
P2197
P2198
P2199
P2200
P2201
P2202
P2203
P2204
P2205
P2206
P2207
P2208
P2209
P2210
P2211
P2212
P2213
P2214
P2215
P2216
P2217
P2218
P2219
P2220
P2221
P2222
P2223
P2224
P2225
P2226
P2227
P2228
P2229
P2230
P2231
P2232
P2233
P2234
P2235
P2236
P2237
P2238
P2239
P2240
P2241
P2242
P2243
P2244
P2245
P2246
P2247
P2248
P2249
P2250
P2251
P2252
P2253
P2254
P2255
P2256
P2257
P2258
P2259
P2260
P2261
P2262
P2263
P2264
P2265
P2266
P2267
P2268
P2269
P2270
P2271
P2272
P2273
P2274
P2275
P2276
P2277
P2278
P2279
P2280
P2281
P2282
P2283
P2284
P2285
P2286
P2287
P2288
P2289
P2290
P2291
P2292
P2293
P2294
P2295
P2296
P2297
P2298
P2299
P2300
P2301
P2302
P2303
P2304
P2305
P2306
P2307
P2308
P2309
P2310
P2311
P2312
P2313
P2314
P2315
P2316
P2317
P2318
P2319
P2320
P2321
P2322
P2323
P2324
P2325
P2326
P2327
P2328
P2329
P2330
P2331
P2332
P2333
P2334
P2335
P2336
P2337
P2338
P2339
P2340
P2341
P2342
P2343
P2344
P2345
P2346
P2347
P2348
P2349
P2350
P2351
P2352
P2353
P2354
P2355
P2356
P2357
P2358
P2359
P2360
P2361
P2362
P2363
P2364
P2365
P2366
P2367
P2368
P2369
P2370
P2371
P2372
P2373
P2374
P2375
P2376
P2377
P2378
P2379
P2380
P2381
P2382
P2383
P2384
P2385
P2386
P2387
P2388
P2389
P2390
P2391
P2392
P2393
P2394
P2395
P2396
P2397
P2398
P2399
P2400
P2401
P2402
P2403
P2404
P2405
P2406
P2407
P2408
P2409
P2410
P2411
P2412
P2413
P2414
P2415
P2416
P2417
P2418
P2419
P2420
P2421
P2422
P2423
P2424
P2425
P2426
P2427
P2428
P2429
P2430
P2431
P2432
P2433
P2434
P2435
P2436
P2437
P2438
P2439
P2440
P2441
P2442
P2443
P2444
P2445
P2446
P2447
P2448
P2449
P2450
P2451
P2452
P2453
P2454
P2455
P2456
P2457
P2458
P2459
P2460
P2461
P2462
P2463
P2464
P2465
P2466
P2467
P2468
P2469
P2470
P2471
P2472
P2473
P2474
P2475
P2476
P2477
P2478
P2479
P2480
P2481
P2482
P2483
P2484
P2485
P2486
P2487
P2488
P2489
P2490
P2491
P2492
P2493
P2494
P2495
P2496
P2497
P2498
P2499
P2500
P2501
P2502
P2503
P2504
P2505
P2506
P2507
P2508
P2509
P2510
P2511
P2512
P2513
P2514
P2515
P2516
P2517
P2518
P2519
P2520
P2521
P2522
P2523
P2524
P2525
P2526
P2527
P2528
P2529
P2530
P2531
P2532
P2533
P2534
P2535
P2536
P2537
P2538
P2539
P2540
P2541
P2542
P2543
P2544
P2545
P2546
P2547
P2548
P2549
P2550
P2551
P2552
P2553
P2554
P2555
P2556
P2557
P2558
P2559
P2560
P2561
P2562
P2563
P2564
P2565
P2566
P2567
P2568
P2569
P2570
P2571
P2572
P2573
P2574
P2575
P2576
P2577
P2578
P2579
P2580
P2581
P2582
P2583
P2584
P2585
P2586
P2587
P2588
P2589
P2590
P2591
P2592
P2593
P2594
P2595
P2596
P2597
P2598
P2599
P2600
P2601
P2602
P2603
P2604
P2605
P2606
P2607
P2608
P2609
P2610
P2611
P2612
P2613
P2614
P2615
P2616
P2617
P2618
P2619
P2620
P2621
P2622
P2623
P2624
P2625
P2626
P2627
P2628
P2629
P2630
P2631
P2632
P2633
P2634
P2635
P2636
P2637
P2638
P2639
P2640
P2641
P2642
P2643
P2644
P2645
P2646
P2647
P2648
P2649
P2650
P2651
P2652
P2653
P2654
P2655
P2656
P2657
P2658
P2659
P2660
P2661
P2662
P2663
P2664
P2665
P2666
P2667
P2668
P2669
P2670
P2671
P2672
P2673
P2674
P2675
P2676
P2677
P2678
P2679
P2680
P2681
P2682
P2683
P2684
P2685
P2686
P2687
P2688
P2689
P2690
P2691
P2692
P2693
P2694
P2695
P2696
P2697
P2698
P2699
P2700
P2701
P2702
P2703
P2704
P2705
P2706
P2707
P2708
P2709
P2710
P2711
P2712
P2713
P2714
P2715
P2716
P2717
P2718
P2719
P2720
P2721
P2722
P2723
P2724
P2725
P2726
P2727
P2728
P2729
P2730
P2731
P2732
P2733
P2734
P2735
P2736
P2737
P2738
P2739
P2740
P2741
P2742
P2743
P2744
P2745
P2746
P2747
P2748
P2749
P2750
P2751
P2752
P2753
P2754
P2755
P2756
P2757
P2758
P2759
P2760
P2761
P2762
P2763
P2764
P2765
P2766
P2767
P2768
P2769
P2770
P2771
P2772
P2773
P2774
P2775
P2776
P2777
P2778
P2779
P2780
P2781
P2782
P2783
P2784
P2785
P2786
P2787
P2788
P2789
P2790
P2791
P2792
P2793
P2794
P2795
P2796
P2797
P2798
P2799
P2800
P2801
P2802
P2803
P2804
P2805
P2806
P2807
P2808
P2809
P2810
P2811
P2812
P2813
P2814
P2815
P2816
P2817
P2818
P2819
P2820
P2821
P2822
P2823
P2824
P2825
P2826
P2827
P2828
P2829
P2830
P2831
P2832
P2833
P2834
P2835
P2836
P2837
P2838
P2839
P2840
P2841
P2842
P2843
P2844
P2845
P2846
P2847
P2848
P2849
P2850
P2851
P2852
P2853
P2854
P2855
P2856
P2857
P2858
P2859
P2860
P2861
P2862
P2863
P2864
P2865
P2866
P2867
P2868
P2869
P2870
P2871
P2872
P2873
P2874
P2875
P2876
P2877
P2878
P2879
P2880
P2881
P2882
P2883
P2884
P2885
P2886
P2887
P2888
P2889
P2890
P2891
P2892
P2893
P2894
P2895
P2896
P2897
P2898
P2899
P2900
P2901
P2902
P2903
P2904
P2905
P2906
P2907
P2908
P2909
P2910
P2911
P2912
P2913
P2914
P2915
P2916
P2917
P2918
P2919
P2920
P2921
P2922
P2923
P2924
P2925
P2926
P2927
P2928
P2929
P2930
P2931
P2932
P2933
P2934
P2935
P2936
P2937
P2938
P2939
P2940
P2941
P2942
P2943
P2944
P2945
P2946
P2947
P2948
P2949
P2950
P2951
P2952
P2953
P2954
P2955
P2956
P2957
P2958
P2959
P2960
P2961
P2962
P2963
P2964
P2965
P2966
P2967
P2968
P2969
P2970
P2971
P2972
P2973
P2974
P2975
P2976
P2977
P2978
P2979
P2980
P2981
P2982
P2983
P2984
P2985
P2986
P2987
P2988
P2989
P2990
P2991
P2992
P2993
P2994
P2995
P2996
P2997
P2998
P2999
P3000
P3001
P3002
P3003
P3004
P3005
P3006
P3007
P3008
P3009
P3010
P3011
P3012
P3013
P3014
P3015
P3016
P3017
P3018
P3019
P3020
P3021
P3022
P3023
P3024
P3025
P3026
P3027
P3028
P3029
P3030
P3031
P3032
P3033
P3034
P3035
P3036
P3037
P3038
P3039
P3040
P3041
P3042
P3043
P3044
P3045
P3046
P3047
P3048
P3049
P3050
P3051
P3052
P3053
P3054
P3055
P3056
P3057
P3058
P3059
P3060
P3061
P3062
P3063
P3064
P3065
P3066
P3067
P3068
P3069
P3070
P3071
P3072
P3073
P3074
P3075
P3076
P3077
P3078
P3079
P3080
P3081
P3082
P3083
P3084
P3085
P3086
P3087
P3088
P3089
P3090
P3091
P3092
P3093
P3094
P3095
P3096
P3097
P3098
P3099
P3100
P3101
P3102
P3103
P3104
P3105
P3106
P3107
P3108
P3109
P3110
P3111
P3112
P3113
P3114
P3115
P3116
P3117
P3118
P3119
P3120
P3121
P3122
P3123
P3124
P3125
P3126
P3127
P3128
P3129
P3130
P3131
P3132
P3133
P3134
P3135
P3136
P3137
P3138
P3139
P3140
P3141
P3142
P3143
P3144
P3145
P3146
P3147
P3148
P3149
P3150
P3151
P3152
P3153
P3154
P3155
P3156
P3157
P3158
P3159
P3160
P3161
P3162
P3163
P3164
P3165
P3166
P3167
P3168
P3169
P3170
P3171
P3172
P3173
P3174
P3175
P3176
P3177
P3178
P3179
P3180
P3181
P3182
P3183
P3184
P3185
P3186
P3187
P3188
P3189
P3190
P3191
P3192
P3193
P3194
P3195
P3196
P3197
P3198
P3199
P3200
P3201
P3202
P3203
P3204
P3205
P3206
P3207
P3208
P3209
P3210
P3211
P3212
P3213
P3214
P3215
P3216
P3217
P3218
P3219
P3220
P3221
P3222
P3223
P3224
P3225
P3226
P3227
P3228
P3229
P3230
P3231
P3232
P3233
P3234
P3235
P3236
P3237
P3238
P3239
P3240
P3241
P3242
P3243
P3244
P3245
P3246
P3247
P3248
P3249
P3250
P3251
P3252
P3253
P3254
P3255
P3256
P3257
P3258
P3259
P3260
P3261
P3262
P3263
P3264
P3265
P3266
P3267
P3268
P3269
P3270
P3271
P3272
P3273
P3274
P3275
P3276
P3277
P3278
P3279
P3280
P3281
P3282
P3283
P3284
P3285
P3286
P3287
P3288
P3289
P3290
P3291
P3292
P3293
P3294
P3295
P3296
P3297
P3298
P3299
P3300
P3301
P3302
P3303
P3304
P3305
P3306
P3307
P3308
P3309
P3310
P3311
P3312
P3313
P3314
P3315
P3316
P3317
P3318
P3319
P3320
P3321
P3322
P3323
P3324
P3325
P3326
P3327
P3328
P3329
P3330
P3331
P3332
P3333
P3334
P3335
P3336
P3337
P3338
P3339
P3340
P3341
P3342
P3343
P3344
P3345
P3346
P3347
P3348
P3349
P3350
P3351
P3352
P3353
P3354
P3355
P3356
P3357
P3358
P3359
P3360
P3361
P3362
P3363
P3364
P3365
P3366
P3367
P3368
P3369
P3370
P3371
P3372
P3373
P3374
P3375
P3376
P3377
P3378
P3379
P3380
P3381
P3382
P3383
P3384
P3385
P3386
P3387
P3388
P3389
P3390
P3391
P3392
P3393
P3394
P3395
P3396
P3397
P3398
P3399
P3400
P3401
P3402
P3403
P3404
P3405
P3406
P3407
P3408
P3409
P3410
P3411
P3412
P3413
P3414
P3415
P3416
P3417
P3418
P3419
P3420
P3421
P3422
P3423
P3424
P3425
P3426
P3427
P3428
P3429
P3430
P3431
P3432
P3433
P3434
P3435
P3436
P3437
P3438
P3439
P3440
P3441
P3442
P3443
P3444
P3445
P3446
P3447
P3448
P3449
P3450
P3451
P3452
P3453
P3454
P3455
P3456
P3457
P3458
P3459
P3460
P3461
P3462
P3463
P3464
P3465
P3466
P3467
P3468
P3469
P3470
P3471
P3472
P3473
P3474
P3475
P3476
P3477
P3478
P3479
P3480
P3481
P3482
P3483
P3484
P3485
P3486
P3487
P3488
P3489
P3490
P3491
P3492
P3493
P3494
P3495
P3496
P3497
P3498
P3499
P3500
P3501
P3502
P3503
P3504
P3505
P3506
P3507
P3508
P3509
P3510
P3511
P3512
P3513
P3514
P3515
P3516
P3517
P3518
P3519
P3520
P3521
P3522
P3523
P3524
P3525
P3526
P3527
P3528
P3529
P3530
P3531
P3532
P3533
P3534
P3535
P3536
P3537
P3538
P3539
P3540
P3541
P3542
P3543
P3544
P3545
P3546
P3547
P3548
P3549
P3550
P3551
P3552
P3553
P3554
P3555
P3556
P3557
P3558
P3559
P3560
P3561
P3562
P3563
P3564
P3565
P3566
P3567
P3568
P3569
P3570
P3571
P3572
P3573
P3574
P3575
P3576
P3577
P3578
P3579
P3580
P3581
P3582
P3583
P3584
P3585
P3586
P3587
P3588
P3589
P3590
P3591
P3592
P3593
P3594
P3595
P3596
P3597
P3598
P3599
P3600
P3601
P3602
P3603
P3604
P3605
P3606
P3607
P3608
P3609
P3610
P3611
P3612
P3613
P3614
P3615
P3616
P3617
P3618
P3619
P3620
P3621
P3622
P3623
P3624
P3625
P3626
P3627
P3628
P3629
P3630
P3631
P3632
P3633
P3634
P3635
P3636
P3637
P3638
P3639
P3640
P3641
P3642
P3643
P3644
P3645
P3646
P3647
P3648
P3649
P3650
P3651
P3652
P3653
P3654
P3655
P3656
P3657
P3658
P3659
P3660
P3661
P3662
P3663
P3664
P3665
P3666
P3667
P3668
P3669
P3670
P3671
P3672
P3673
P3674
P3675
P3676
P3677
P3678
P3679
P3680
P3681
P3682
P3683
P3684
P3685
P3686
P3687
P3688
P3689
P3690
P3691
P3692
P3693
P3694
P3695
P3696
P3697
P3698
P3699
P3700
P3701
P3702
P3703
P3704
P3705
P3706
P3707
P3708
P3709
P3710
P3711
P3712
P3713
P3714
P3715
P3716
P3717
P3718
P3719
P3720
P3721
P3722
P3723
P3724
P3725
P3726
P3727
P3728
P3729
P3730
P3731
P3732
P3733
P3734
P3735
P3736
P3737
P3738
P3739
P3740
P3741
P3742
P3743
P3744
P3745
P3746
P3747
P3748
P3749
P3750
P3751
P3752
P3753
P3754
P3755
P3756
P3757
P3758
P3759
P3760
P3761
P3762
P3763
P3764
P3765
P3766
P3767
P3768
P3769
P3770
P3771
P3772
P3773
P3774
P3775
P3776
P3777
P3778
P3779
P3780
P3781
P3782
P3783
P3784
P3785
P3786
P3787
P3788
P3789
P3790
P3791
P3792
P3793
P3794
P3795
P3796
P3797
P3798
P3799
P3800
P3801
P3802
P3803
P3804
P3805
P3806
P3807
P3808
P3809
P3810
P3811
P3812
P3813
P3814
P3815
P3816
P3817
P3818
P3819
P3820
P3821
P3822
P3823
P3824
P3825
P3826
P3827
P3828
P3829
P3830
P3831
P3832
P3833
P3834
P3835
P3836
P3837
P3838
P3839
P3840
P3841
P3842
P3843
P3844
P3845
P3846
P3847
P3848
P3849
P3850
P3851
P3852
P3853
P3854
P3855
P3856
P3857
P3858
P3859
P3860
P3861
P3862
P3863
P3864
P3865
P3866
P3867
P3868
P3869
P3870
P3871
P3872
P3873
P3874
P3875
P3876
P3877
P3878
P3879
P3880
P3881
P3882
P3883
P3884
P3885
P3886
P3887
P3888
P3889
P3890
P3891
P3892
P3893
P3894
P3895
P3896
P3897
P3898
P3899
P3900
P3901
P3902
P3903
P3904
P3905
P3906
P3907
P3908
P3909
P3910
P3911
P3912
P3913
P3914
P3915
P3916
P3917
P3918
P3919
P3920
P3921
P3922
P3923
P3924
P3925
P3926
P3927
P3928
P3929
P3930
P3931
P3932
P3933
P3934
P3935
P3936
P3937
P3938
P3939
P3940
P3941
P3942
P3943
P3944
P3945
P3946
P3947
P3948
P3949
P3950
P3951
P3952
P3953
P3954
P3955
P3956
P3957
P3958
P3959
P3960
P3961
P3962
P3963
P3964
P3965
P3966
P3967
P3968
P3969
P3970
P3971
P3972
P3973
P3974
P3975
P3976
P3977
P3978
P3979
P3980
P3981
P3982
P3983
P3984
P3985
P3986
P3987
P3988
P3989
P3990
P3991
P3992
P3993
P3994
P3995
P3996
P3997
P3998
P3999
P4000
P4001
P4002
P4003
P4004
P4005
P4006
P4007
P4008
P4009
P4010
P4011
P4012
P4013
P4014
P4015
P4016
P4017
P4018
P4019
P4020
P4021
P4022
P4023
P4024
P4025
P4026
P4027
P4028
P4029
P4030
P4031
P4032
P4033
P4034
P4035
P4036
P4037
P4038
P4039
P4040
P4041
P4042
P4043
P4044
P4045
P4046
P4047
P4048
P4049
P4050
P4051
P4052
P4053
P4054
P4055
P4056
P4057
P4058
P4059
P4060
P4061
P4062
P4063
P4064
P4065
P4066
P4067
P4068
P4069
P4070
P4071
P4072
P4073
P4074
P4075
P4076
P4077
P4078
P4079
P4080
P4081
P4082
P4083
P4084
P4085
P4086
P4087
P4088
P4089
P4090
P4091
P4092
P4093
P4094
P4095
P4096
P4097
P4098
P4099
P4100
P4101
P4102
P4103
P4104
P4105
P4106
P4107
P4108
P4109
P4110
P4111
P4112
P4113
P4114
P4115
P4116
P4117
P4118
P4119
P4120
P4121
P4122
P4123
P4124
P4125
P4126
P4127
P4128
P4129
P4130
P4131
P4132
P4133
P4134
P4135
P4136
P4137
P4138
P4139
P4140
P4141
P4142
P4143
P4144
P4145
P4146
P4147
P4148
P4149
P4150
P4151
P4152
P4153
P4154
P4155
P4156
P4157
P4158
P4159
P4160
P4161
P4162
P4163
P4164
P4165
P4166
P4167
P4168
P4169
P4170
P4171
P4172
P4173
P4174
P4175
P4176
P4177
P4178
P4179
P4180
P4181
P4182
P4183
P4184
P4185
P4186
P4187
P4188
P4189
P4190
P4191
P4192
P4193
P4194
P4195
P4196
P4197
P4198
P4199
P4200
P4201
P4202
P4203
P4204
P4205
P4206
P4207
P4208
P4209
P4210
P4211
P4212
P4213
P4214
P4215
P4216
P4217
P4218
P4219
P4220
P4221
P4222
P4223
P4224
P4225
P4226
P4227
P4228
P4229
P4230
P4231
P4232
P4233
P4234
P4235
P4236
P4237
P4238
P4239
P4240
P4241
P4242
P4243
P4244
P4245
P4246
P4247
P4248
P4249
P4250
P4251
P4252
P4253
P4254
P4255
P4256
P4257
P4258
P4259
P4260
P4261
P4262
P4263
P4264
P4265
P4266
P4267
P4268
P4269
P4270
P4271
P4272
P4273
P4274
P4275
P4276
P4277
P4278
P4279
P4280
P4281
P4282
P4283
P4284
P4285
P4286
P4287
P4288
P4289
P4290
P4291
P4292
P4293
P4294
P4295
P4296
P4297
P4298
P4299
P4300
P4301
P4302
P4303
P4304
P4305
P4306
P4307
P4308
P4309
P4310
P4311
P4312
P4313
P4314
P4315
P4316
P4317
P4318
P4319
P4320
P4321
P4322
P4323
P4324
P4325
P4326
P4327
P4328
P4329
P4330
P4331
P4332
P4333
P4334
P4335
P4336
P4337
P4338
P4

Figure A6-46 : 2019 Summer Peak Post-Project Alternative 2 Case B - Contingency of 9L933\933L (Ware Junction 132S - Anderson 801S)

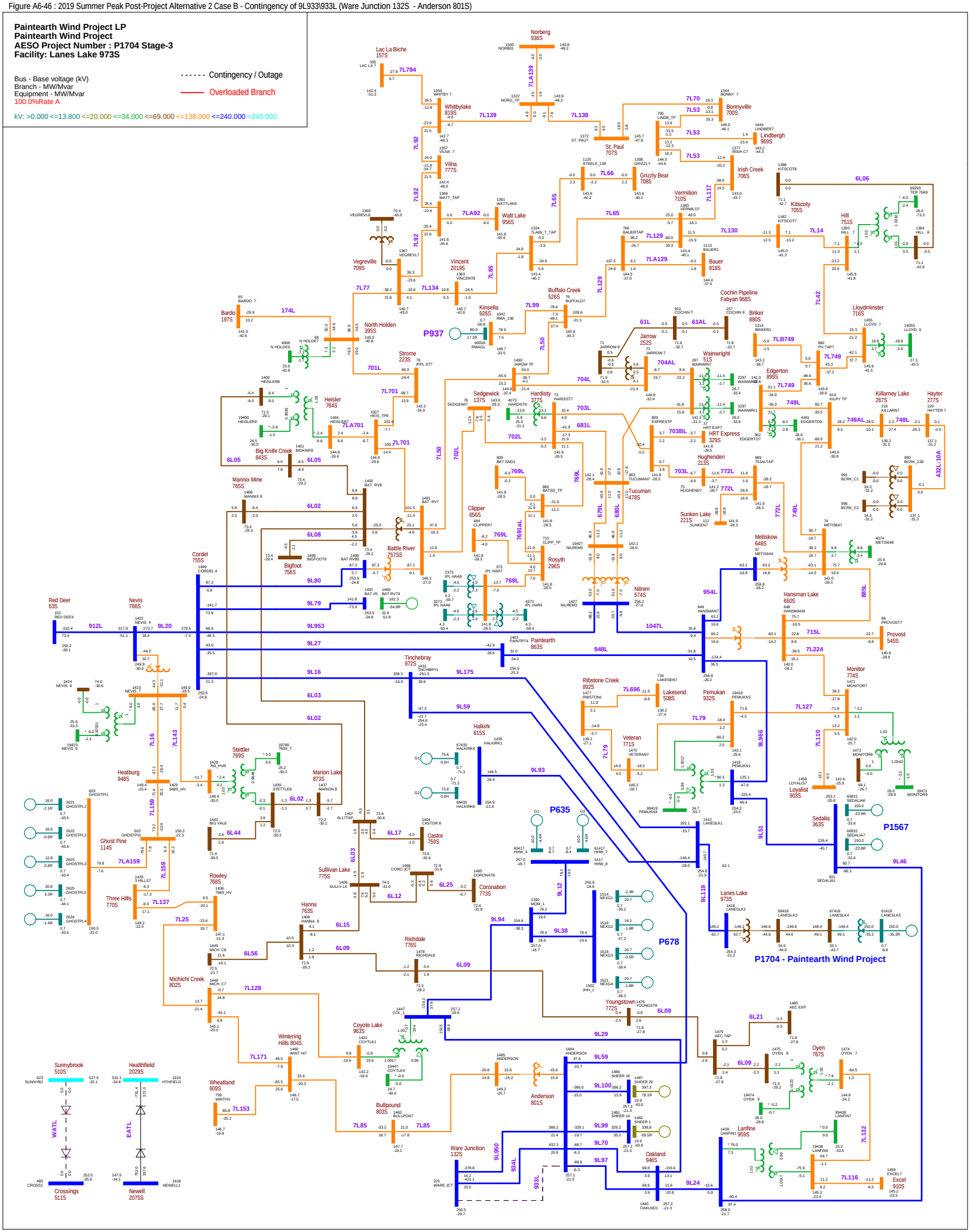

Figure A6-47 : 2019 Summer Peak Post-Project Alternative 2 Case B - Contingency of 9L934\934L (Ware Junction 132S - Anderson 801S)

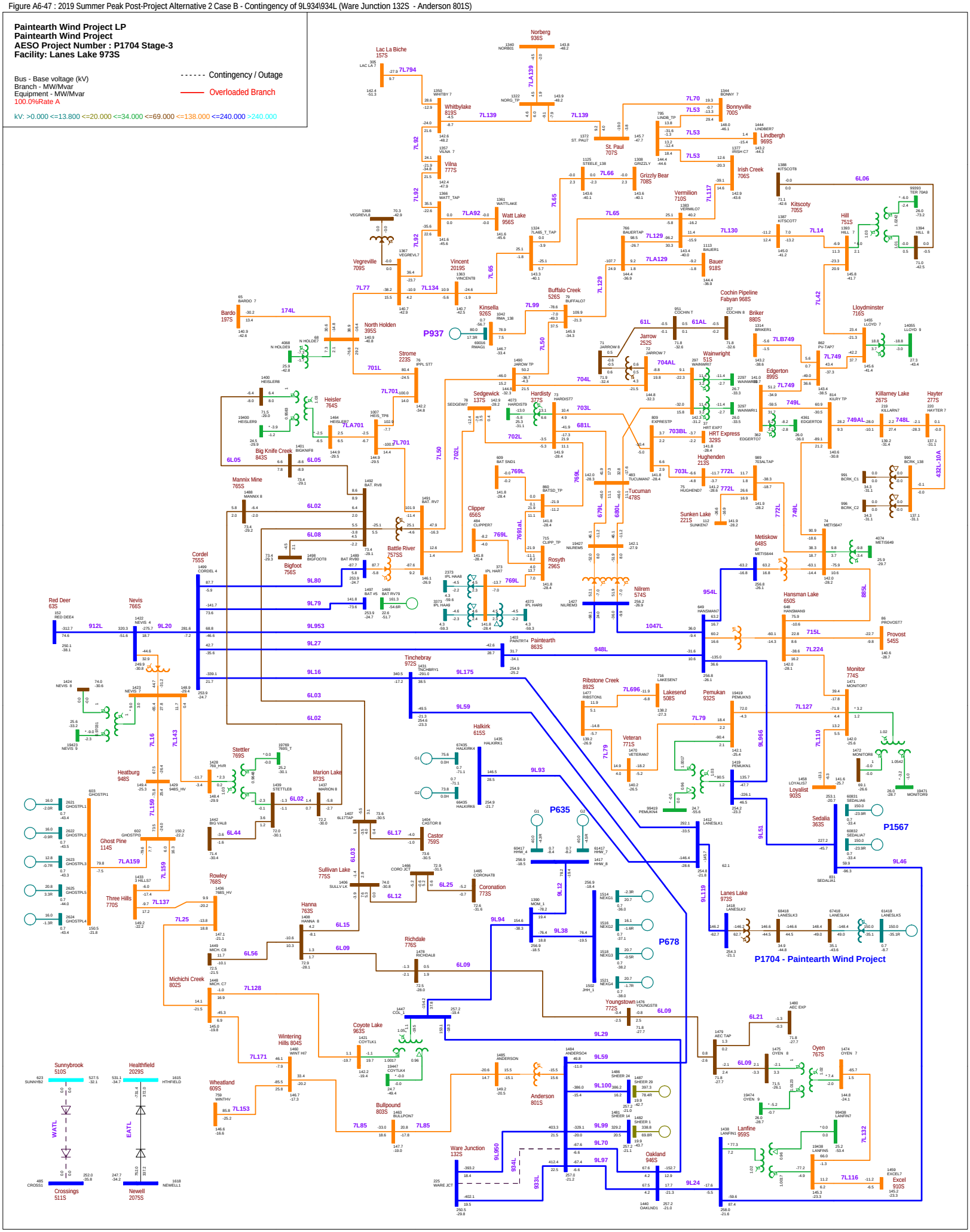

Figure A6-48 : 2019 Summer Peak Post-Project Alternative 2 Case B - Contingency of 9L950\950L (Ware Junction 132S - Anderson 801S)

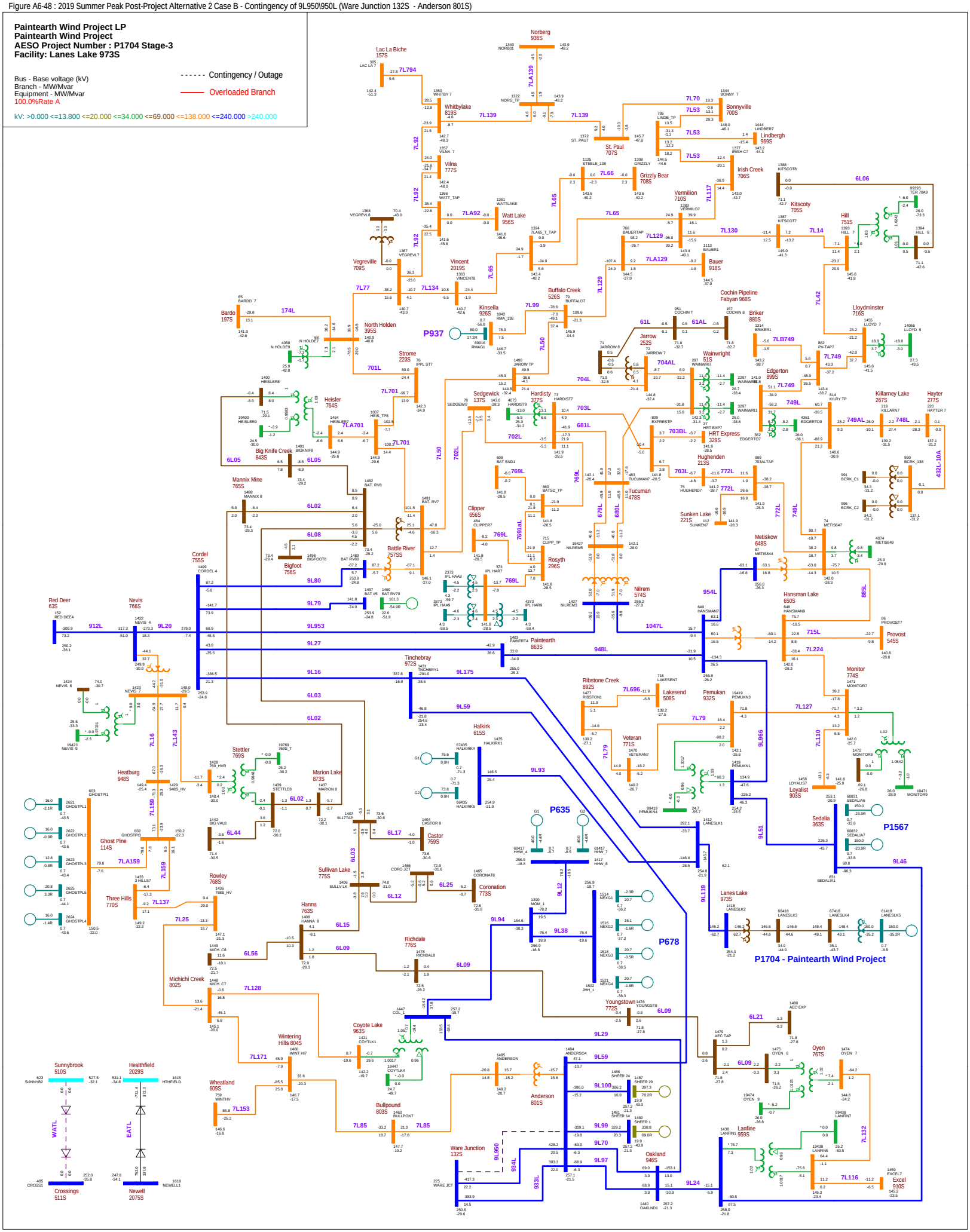

Figure A6-49 : 2019 Summer Peak Post-Project Alternative 2 Case B - Contingency of EATL (Newell 2075S - Heathfield 2029S)

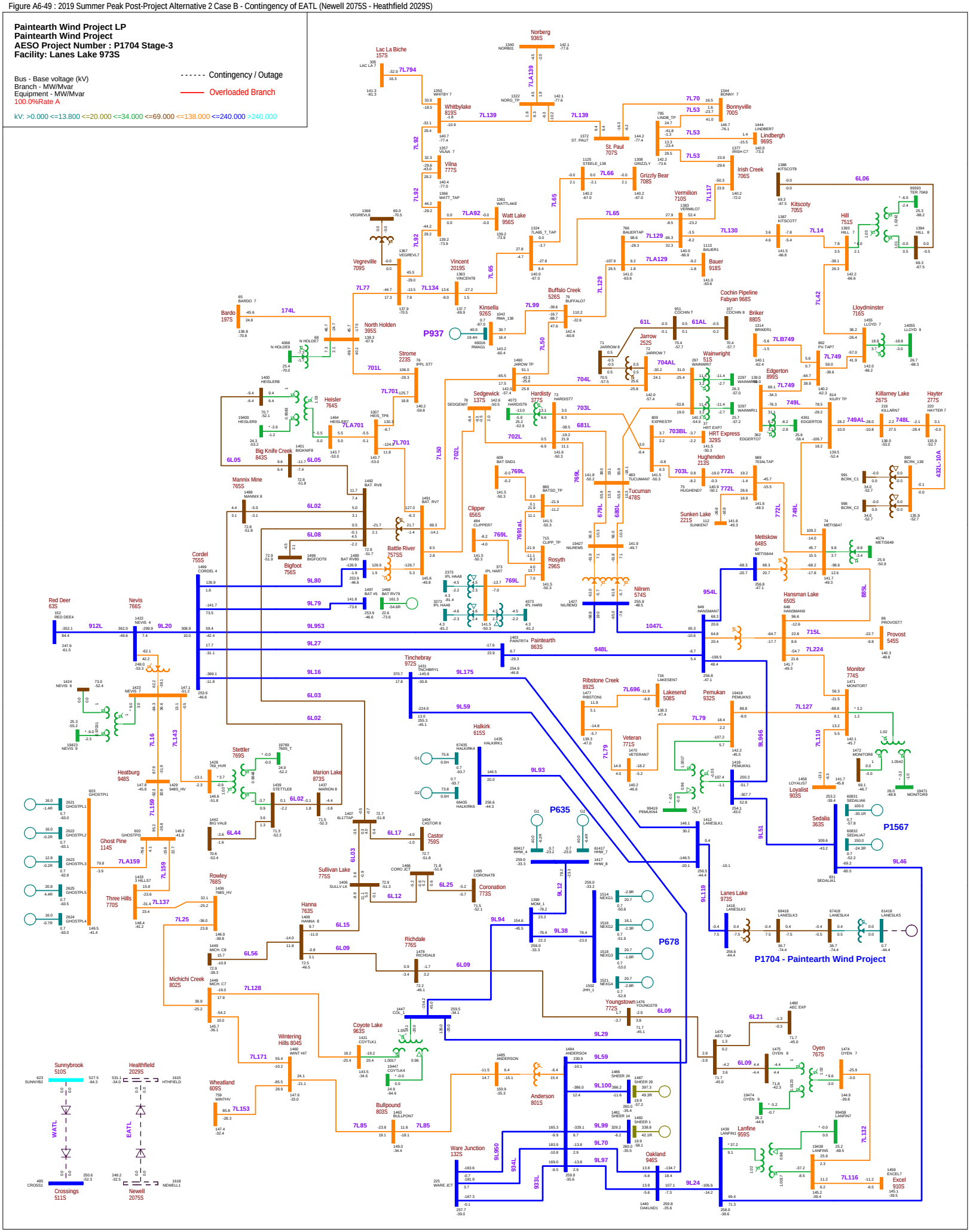

Figure A6-50 : 2019 Winter Peak Post-Project Alternative 2 Case A - Contingency of 749L\749AL (Metiskow 648S - Edgerton 899S)

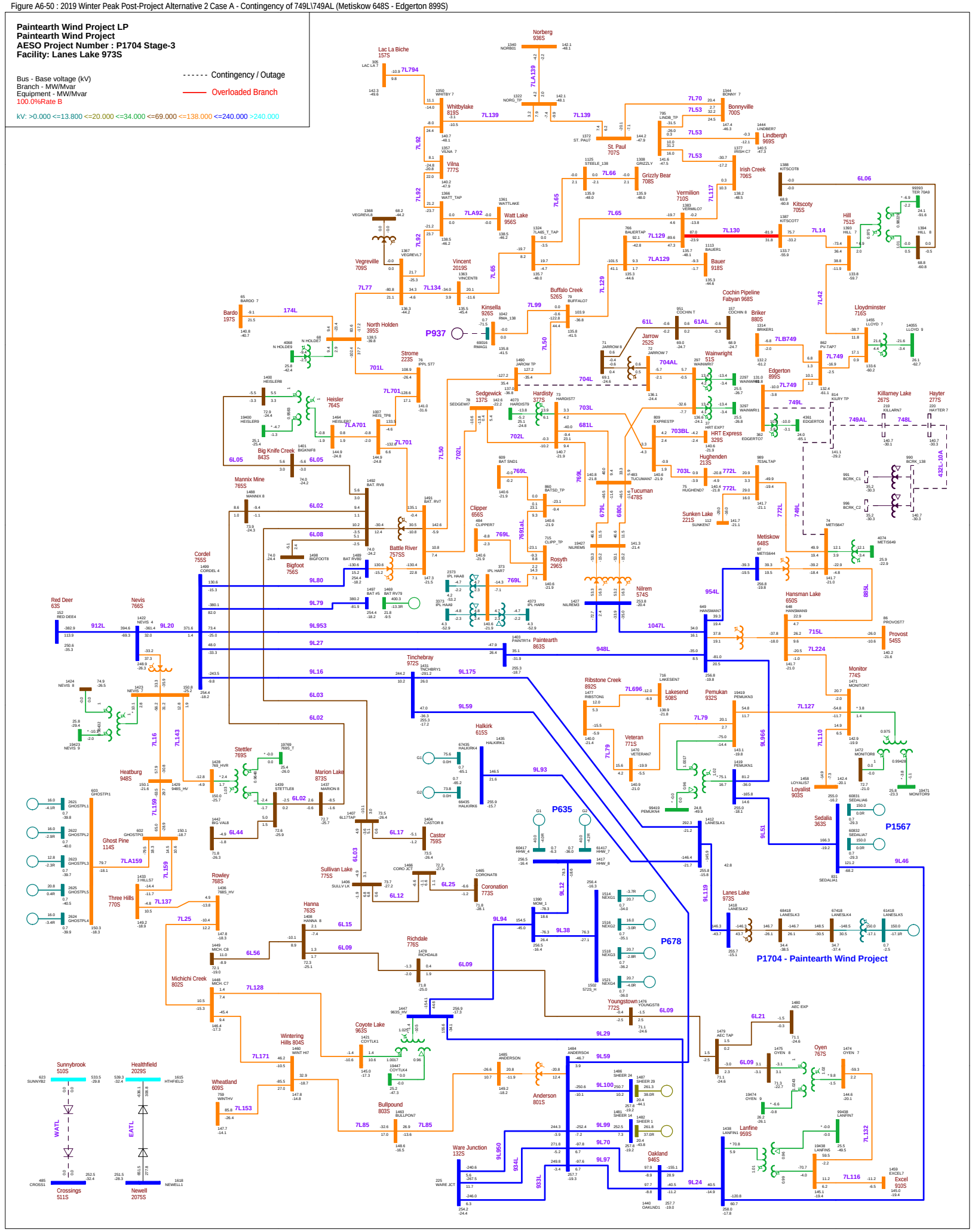

Figure A6-51 : 2019 Winter Peak Post-Project Alternative 2 Case A - Contingency of 766S901T (Nevis 766S Transformer 901T)

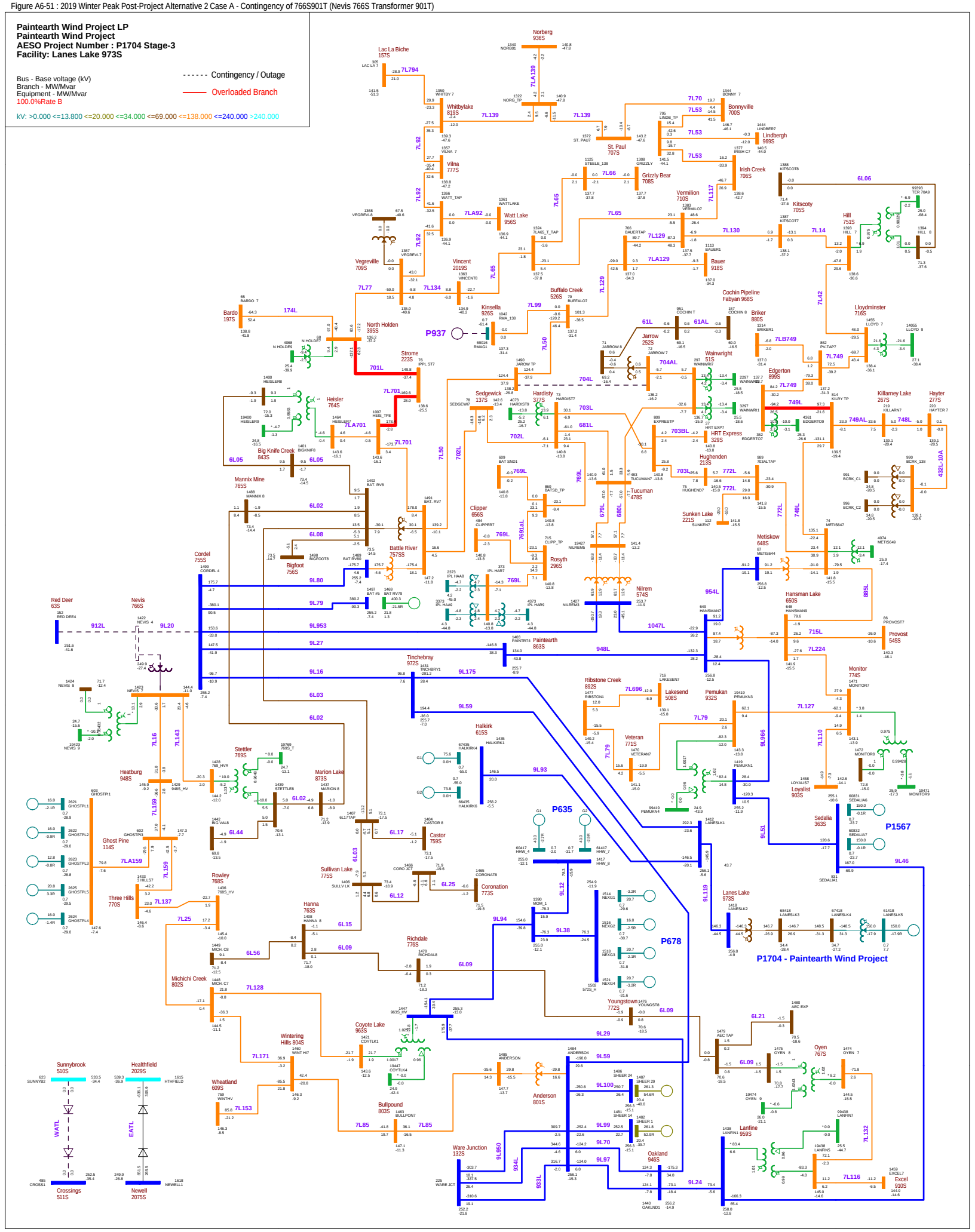
Paintearth Wind Project LP
Paintearth Wind Project
AESO Project Number : P1704 Stage-3
Facility: Lanes Lake 973S
Bus - Base voltage (kV)
Branch - MW/Mvar
Equipment - MW/Mvar
100.0%Rate B
kV: >0.000 <=13.800 <=20.000 <=34.000 <=69.000 <=138.000 <=240.000 >240.000
Contingency / Outage
Overloaded Branch
Norberg 936S
Lac La Biche 157S
Whitbylake 819S
Vilna 777S
Watt Lake 956S
Vegreville 709S
Vincent 2019S
Kinsella 926S
Buffalo Creek 526S
St. Paul 707S
Bonnyville 700S
Lindbergh 969S
Irish Creek 706S
Grizzly Bear 708S
Vermilion 710S
Bauer 918S
Kitscoty 705S
Hill 751S
Cochin Pipeline Fabyan 968S
Briker 880S
Lloydminster 716S
Bardo 197S
North Holden 395S
P937
Strome 223S
Jarrow 252S
Wainwright 51S
Edgerton 899S
Killarney Lake 267S
Hayter 277S
Heisler 764S
Sedgewick 137S
Hardisty 377S
HRT Express 329S
Hughenden 213S
Big Knife Creek 843S
Mannix Mine 765S
Clipper 656S
Tucuman 478S
Sunken Lake 221S
Metiskow 648S
Bigfoot 756S
Battle River 757SS
Rosyth 296S
Nilrem 574S
Hansman Lake 650S
Cordel 755S
Red Deer 63S
Nevis 766S
Paintearth 863S
Provost 545S
Tinchebray 972S
Ribstone Creek 892S
Lakesend 508S
Pemukan 932S
Monitor 774S
Heatburg 948S
Stettler 769S
Marion Lake 873S
Halkirk 615S
Veteran 771S
Loyalist 903S
Ghost Pine 114S
Three Hills 770S
Rowley 768S
Sullivan Lake 775S
Castor 759S
Coronation 773S
Hanna 763S
Sedalia 363S
Lanes Lake 973S
P1567
P635
P678
P1704 - Paintearth Wind Project
Richdale 776S
Michichi Creek 802S
Youngstown 772S
Oyen 767S
Coyote Lake 963S
Wintering Hills 804S
Wheatland 609S
Bullpound 803S
Anderson 801S
Ware Junction 132S
Oakland 946S
Lanfine 959S
Excel 910S
Sunnybrook 510S
Healthfield 2029S
Crossings 511S
Newell 2075S
WATL
EATL
Cochin T
Cochin 8
Jarrow 9
Jarrow 7
Wainwright 7
Wainwrir7
Edgerton 7
Killarn7
Hayter 7
Lloyd 7
Lloyd 9
Briker1
Kilry TP
Edgert07
Edgert09
Wainwri1
Wainwri2
Hardist7
Hardist9
Sedgewi7
Expresstp
Hrt Exp7
Jarrow 6
Jarrow 8
Buffalo7
Bauer1
Bauertap
Vermillo7
Vermillo8
Watlake
Vegrevl7
Vegrevl8
Vincent8
Rmga_138
Rmga1
Kinsella
Bardo 7
N Holde7
N Holde8
Heisler8
Heisler7
Bigknif8
Bigknif5
Bigfoot8
Bat Rv8
Bat Rv7
Bat Rv9
Bat Rv79
Bat #5
Bat Rv81
Mannix 8
Cordel 4
Nevis 4
Nevis 8
Nevis 7
Nevis 9
Paintyrt4
Tinchbry1
Tinchbry2
Halkirk1
Halkirk4
Halkirk5
Halkirk6
Halkirk7
Halkirk8
Stettler8
Stettler7
Heatburg
Marion 8
Marion 7
Big Val8
Ghostpl1
Ghostpl2
Ghostpl3
Ghostpl4
Ghostpl5
Ghostpl6
Ghostpl7
Ghostpl8
Ghostp1
Ghostp3
Ghostp5
Castor 8
Castor 7
Castor 9
Castor 6
Hills7
Hills8
Michcr8
Michcr7
Michcr6
Michcr9
Michcr5
Michcr4
Michcr3
Michcr2
Michcr1
Michcr10
Michcr11
Michcr12
Michcr13
Michcr14
Michcr15
Michcr16
Michcr17
Michcr18
Michcr19
Michcr20
Michcr21
Michcr22
Michcr23
Michcr24
Michcr25
Michcr26
Michcr27
Michcr28
Michcr29
Michcr30
Michcr31
Michcr32
Michcr33
Michcr34
Michcr35
Michcr36
Michcr37
Michcr38
Michcr39
Michcr40
Michcr41
Michcr42
Michcr43
Michcr44
Michcr45
Michcr46
Michcr47
Michcr48
Michcr49
Michcr50
Michcr51
Michcr52
Michcr53
Michcr54
Michcr55
Michcr56
Michcr57
Michcr58
Michcr59
Michcr60
Michcr61
Michcr62
Michcr63
Michcr64
Michcr65
Michcr66
Michcr67
Michcr68
Michcr69
Michcr70
Michcr71
Michcr72
Michcr73
Michcr74
Michcr75
Michcr76
Michcr77
Michcr78
Michcr79
Michcr80
Michcr81
Michcr82
Michcr83
Michcr84
Michcr85
Michcr86
Michcr87
Michcr88
Michcr89
Michcr90
Michcr91
Michcr92
Michcr93
Michcr94
Michcr95
Michcr96
Michcr97
Michcr98
Michcr99
Michcr100
Michcr101
Michcr102
Michcr103
Michcr104
Michcr105
Michcr106
Michcr107
Michcr108
Michcr109
Michcr110
Michcr111
Michcr112
Michcr113
Michcr114
Michcr115
Michcr116
Michcr117
Michcr118
Michcr119
Michcr120
Michcr121
Michcr122
Michcr123
Michcr124
Michcr125
Michcr126
Michcr127
Michcr128
Michcr129
Michcr130
Michcr131
Michcr132
Michcr133
Michcr134
Michcr135
Michcr136
Michcr137
Michcr138
Michcr139
Michcr140
Michcr141
Michcr142
Michcr143
Michcr144
Michcr145
Michcr146
Michcr147
Michcr148
Michcr149
Michcr150
Michcr151
Michcr152
Michcr153
Michcr154
Michcr155
Michcr156
Michcr157
Michcr158
Michcr159
Michcr160
Michcr161
Michcr162
Michcr163
Michcr164
Michcr165
Michcr166
Michcr167
Michcr168
Michcr169
Michcr170
Michcr171
Michcr172
Michcr173
Michcr174
Michcr175
Michcr176
Michcr177
Michcr178
Michcr179
Michcr180
Michcr181
Michcr182
Michcr183
Michcr184
Michcr185
Michcr186
Michcr187
Michcr188
Michcr189
Michcr190
Michcr191
Michcr192
Michcr193
Michcr194
Michcr195
Michcr196
Michcr197
Michcr198
Michcr199
Michcr200
Michcr201
Michcr202
Michcr203
Michcr204
Michcr205
Michcr206
Michcr207
Michcr208
Michcr209
Michcr210
Michcr211
Michcr212
Michcr213
Michcr214
Michcr215
Michcr216
Michcr217
Michcr218
Michcr219
Michcr220
Michcr221
Michcr222
Michcr223
Michcr224
Michcr225
Michcr226
Michcr227
Michcr228
Michcr229
Michcr230
Michcr231
Michcr232
Michcr233
Michcr234
Michcr235
Michcr236
Michcr237
Michcr238
Michcr239
Michcr240
Michcr241
Michcr242
Michcr243
Michcr244
Michcr245
Michcr246
Michcr247
Michcr248
Michcr249
Michcr250
Michcr251
Michcr252
Michcr253
Michcr254
Michcr255
Michcr256
Michcr257
Michcr258
Michcr259
Michcr260
Michcr261
Michcr262
Michcr263
Michcr264
Michcr265
Michcr266
Michcr267
Michcr268
Michcr269
Michcr270
Michcr271
Michcr272
Michcr273
Michcr274
Michcr275
Michcr276
Michcr277
Michcr278
Michcr279
Michcr280
Michcr281
Michcr282
Michcr283
Michcr284
Michcr285
Michcr286
Michcr287
Michcr288
Michcr289
Michcr290
Michcr291
Michcr292
Michcr293
Michcr294
Michcr295
Michcr296
Michcr297
Michcr298
Michcr299
Michcr300
Michcr301
Michcr302
Michcr303
Michcr304
Michcr305
Michcr306
Michcr307
Michcr308
Michcr309
Michcr310
Michcr311
Michcr312
Michcr313
Michcr314
Michcr315
Michcr316
Michcr317
Michcr318
Michcr319
Michcr320
Michcr321
Michcr322
Michcr323
Michcr324
Michcr325
Michcr326
Michcr327
Michcr328
Michcr329
Michcr330
Michcr331
Michcr332
Michcr333
Michcr334
Michcr335
Michcr336
Michcr337
Michcr338
Michcr339
Michcr340
Michcr341
Michcr342
Michcr343
Michcr344
Michcr345
Michcr346
Michcr347
Michcr348
Michcr349
Michcr350
Michcr351
Michcr352
Michcr353
Michcr354
Michcr355
Michcr356
Michcr357
Michcr358
Michcr359
Michcr360
Michcr361
Michcr362
Michcr363
Michcr364
Michcr365
Michcr366
Michcr367
Michcr368
Michcr369
Michcr370
Michcr371
Michcr372
Michcr373
Michcr374
Michcr375
Michcr376
Michcr377
Michcr378
Michcr379
Michcr380
Michcr381
Michcr382
Michcr383
Michcr384
Michcr385
Michcr386
Michcr387
Michcr388
Michcr389
Michcr390
Michcr391
Michcr392
Michcr393
Michcr394
Michcr395
Michcr396
Michcr397
Michcr398
Michcr399
Michcr400
Michcr401
Michcr402
Michcr403
Michcr404
Michcr405
Michcr406
Michcr407
Michcr408
Michcr409
Michcr410
Michcr411
Michcr412
Michcr413
Michcr414
Michcr415
Michcr416
Michcr417
Michcr418
Michcr419
Michcr420
Michcr421
Michcr422
Michcr423
Michcr424
Michcr425
Michcr426
Michcr427
Michcr428
Michcr429
Michcr430
Michcr431
Michcr432
Michcr433
Michcr434
Michcr435
Michcr436
Michcr437
Michcr438
Michcr439
Michcr440
Michcr441
Michcr442
Michcr443
Michcr444
Michcr445
Michcr446
Michcr447
Michcr448
Michcr449
Michcr450
Michcr451
Michcr452
Michcr453
Michcr454
Michcr455
Michcr456
Michcr457
Michcr458
Michcr459
Michcr460
Michcr461
Michcr462
Michcr463
Michcr464
Michcr465
Michcr466
Michcr467
Michcr468
Michcr469
Michcr470
Michcr471
Michcr472
Michcr473
Michcr474
Michcr475
Michcr476
Michcr477
Michcr478
Michcr479
Michcr480
Michcr481
Michcr482
Michcr483
Michcr484
Michcr485
Michcr486
Michcr487
Michcr488
Michcr489
Michcr490
Michcr491
Michcr492
Michcr493
Michcr494
Michcr495
Michcr496
Michcr497
Michcr498
Michcr499
Michcr500
Michcr501
Michcr502
Michcr503
Michcr504
Michcr505
Michcr506
Michcr507
Michcr508
Michcr509
Michcr510
Michcr511
Michcr512
Michcr513
Michcr514
Michcr515
Michcr516
Michcr517
Michcr518
Michcr519
Michcr520
Michcr521
Michcr522
Michcr523
Michcr524
Michcr525
Michcr526
Michcr527
Michcr528
Michcr529
Michcr530
Michcr531
Michcr532
Michcr533
Michcr534
Michcr535
Michcr536
Michcr537
Michcr538
Michcr539
Michcr540
Michcr541
Michcr542
Michcr543
Michcr544
Michcr545
Michcr546
Michcr547
Michcr548
Michcr549
Michcr550
Michcr551
Michcr552
Michcr553
Michcr554
Michcr555
Michcr556
Michcr557
Michcr558
Michcr559
Michcr560
Michcr561
Michcr562
Michcr563
Michcr564
Michcr565
Michcr566
Michcr567
Michcr568
Michcr569
Michcr570
Michcr571
Michcr572
Michcr573
Michcr574
Michcr575
Michcr576
Michcr577
Michcr578
Michcr579
Michcr580
Michcr581
Michcr582
Michcr583
Michcr584
Michcr585
Michcr586
Michcr587
Michcr588
Michcr589
Michcr590
Michcr591
Michcr592
Michcr593
Michcr594
Michcr595
Michcr596
Michcr597
Michcr598
Michcr599
Michcr600
Michcr601
Michcr602
Michcr603
Michcr604
Michcr605
Michcr606
Michcr607
Michcr608
Michcr609
Michcr610
Michcr611
Michcr612
Michcr613
Michcr614
Michcr615
Michcr616
Michcr617
Michcr618
Michcr619
Michcr620
Michcr621
Michcr622
Michcr623
Michcr624
Michcr625
Michcr626
Michcr627
Michcr628
Michcr629
Michcr630
Michcr631
Michcr632
Michcr633
Michcr634
Michcr635
Michcr636
Michcr637
Michcr638
Michcr639
Michcr640
Michcr641
Michcr642
Michcr643
Michcr644
Michcr645
Michcr646
Michcr647
Michcr648
Michcr649
Michcr650
Michcr651
Michcr652
Michcr653
Michcr654
Michcr655
Michcr656
Michcr657
Michcr658
Michcr659
Michcr660
Michcr661
Michcr662
Michcr663
Michcr664
Michcr665
Michcr666
Michcr667
Michcr668
Michcr669
Michcr670
Michcr671
Michcr672
Michcr673
Michcr674
Michcr675
Michcr676
Michcr677
Michcr678
Michcr679
Michcr680
Michcr681
Michcr682
Michcr683
Michcr684
Michcr685
Michcr686
Michcr687
Michcr688
Michcr689
Michcr690
Michcr691
Michcr692
Michcr693
Michcr694
Michcr695
Michcr696
Michcr697
Michcr698
Michcr699
Michcr700
Michcr701
Michcr702
Michcr703
Michcr704
Michcr705
Michcr706
Michcr707
Michcr708
Michcr709
Michcr710
Michcr711
Michcr712
Michcr713
Michcr714
Michcr715
Michcr716
Michcr717
Michcr718
Michcr719
Michcr720
Michcr721
Michcr722
Michcr723
Michcr724
Michcr725
Michcr726
Michcr727
Michcr728
Michcr729
Michcr730
Michcr731
Michcr732
Michcr733
Michcr734
Michcr735
Michcr736
Michcr737
Michcr738
Michcr739
Michcr740
Michcr741
Michcr742
Michcr743
Michcr744
Michcr745
Michcr746
Michcr747
Michcr748
Michcr749
Michcr750
Michcr751
Michcr752
Michcr753
Michcr754
Michcr755
Michcr756
Michcr757
Michcr758
Michcr759
Michcr760
Michcr761
Michcr762
Michcr763
Michcr764
Michcr765
Michcr766
Michcr767
Michcr768
Michcr769
Michcr770
Michcr771
Michcr772
Michcr773
Michcr774
Michcr775
Michcr776
Michcr777
Michcr778
Michcr779
Michcr780
Michcr781
Michcr782
Michcr783
Michcr784
Michcr785
Michcr786
Michcr787
Michcr788
Michcr789
Michcr790
Michcr791
Michcr792
Michcr793
Michcr794
Michcr795
Michcr796
Michcr797
Michcr798
Michcr799
Michcr800
Michcr801
Michcr802
Michcr803
Michcr804
Michcr805
Michcr806
Michcr807
Michcr808
Michcr809
Michcr810
Michcr811
Michcr812
Michcr813
Michcr814
Michcr815
Michcr816
Michcr817
Michcr818
Michcr819
Michcr820
Michcr821
Michcr822
Michcr823
Michcr824
Michcr825
Michcr826
Michcr827
Michcr828
Michcr829
Michcr830
Michcr831
Michcr832
Michcr833
Michcr834
Michcr835
Michcr836
Michcr837
Michcr838
Michcr839
Michcr840
Michcr841
Michcr842
Michcr843
Michcr844
Michcr845
Michcr846
Michcr847
Michcr848
Michcr849
Michcr850
Michcr851
Michcr852
Michcr853
Michcr854
Michcr855
Michcr856
Michcr857
Michcr858
Michcr859
Michcr860
Michcr861
Michcr862
Michcr863
Michcr864
Michcr865
Michcr866
Michcr867
Michcr868
Michcr869
Michcr870
Michcr871
Michcr872
Michcr873
Michcr874
Michcr875
Michcr876
Michcr877
Michcr878
Michcr879
Michcr880
Michcr881
Michcr882
Michcr883
Michcr884
Michcr885
Michcr886
Michcr887
Michcr888
Michcr889
Michcr890
Michcr891
Michcr892
Michcr893
Michcr894
Michcr895
Michcr896
Michcr897
Michcr898
Michcr899
Michcr900
Michcr901
Michcr902
Michcr903
Michcr904
Michcr905
Michcr906
Michcr907
Michcr908
Michcr909
Michcr910
Michcr911
Michcr912
Michcr913
Michcr914
Michcr915
Michcr916
Michcr917
Michcr918
Michcr919
Michcr920
Michcr921
Michcr922
Michcr923
Michcr924
Michcr925
Michcr926
Michcr927
Michcr928
Michcr929
Michcr930
Michcr931
Michcr932
Michcr933
Michcr934
Michcr935
Michcr936
Michcr937
Michcr938
Michcr939
Michcr940
Michcr941
Michcr942
Michcr943
Michcr944
Michcr945
Michcr946
Michcr947
Michcr948
Michcr949
Michcr950
Michcr951
Michcr952
Michcr953
Michcr954
Michcr955
Michcr956
Michcr957
Michcr958
Michcr959
Michcr960
Michcr961
Michcr962
Michcr963
Michcr964
Michcr965
Michcr966
Michcr967
Michcr968
Michcr969
Michcr970
Michcr971
Michcr972
Michcr973
Michcr974
Michcr975
Michcr976
Michcr977
Michcr978
Michcr979
Michcr980
Michcr981
Michcr982
Michcr983
Michcr984
Michcr985
Michcr986
Michcr987
Michcr988
Michcr989
Michcr990
Michcr991
Michcr992
Michcr993
Michcr994
Michcr995
Michcr996
Michcr997
Michcr998
Michcr999
Michcr1000
Michcr1001
Michcr1002
Michcr1003
Michcr1004
Michcr1005
Michcr1006
Michcr1007
Michcr1008
Michcr1009
Michcr1010
Michcr1011
Michcr1012
Michcr1013
Michcr1014
Michcr1015
Michcr1016
Michcr1017
Michcr1018
Michcr1019
Michcr1020
Michcr1021
Michcr1022
Michcr1023
Michcr1024
Michcr1025
Michcr1026
Michcr1027
Michcr1028
Michcr1029
Michcr1030
Michcr1031
Michcr1032
Michcr1033
Michcr1034
Michcr1035
Michcr1036
Michcr1037
Michcr1038
Michcr1039
Michcr1040
Michcr1041
Michcr1042
Michcr1043
Michcr1044
Michcr1045
Michcr1046
Michcr1047
Michcr1048
Michcr1049
Michcr1050
Michcr1051
Michcr1052
Michcr1053
Michcr1054
Michcr1055
Michcr1056
Michcr1057
Michcr1058
Michcr1059
Michcr1060
Michcr1061
Michcr1062
Michcr1063
Michcr1064
Michcr1065
Michcr1066
Michcr1067
Michcr1068
Michcr1069
Michcr1070
Michcr1071
Michcr1072
Michcr1073
Michcr1074
Michcr1075
Michcr1076
Michcr1077
Michcr1078
Michcr1079
Michcr1080
Michcr1081
Michcr1082
Michcr1083
Michcr1084
Michcr1085
Michcr1086
Michcr1087
Michcr1088
Michcr1089
Michcr1090
Michcr1091
Michcr1092
Michcr1093
Michcr1094
Michcr1095
Michcr1096
Michcr1097
Michcr1098
Michcr1099
Michcr1100
Michcr1101
Michcr1102
Michcr1103
Michcr1104
Michcr1105
Michcr1106
Michcr1107
Michcr1108
Michcr1109
Michcr1110
Michcr1111
Michcr1112
Michcr1113
Michcr1114
Michcr1115
Michcr1116
Michcr1117
Michcr1118
Michcr1119
Michcr1120
Michcr1121
Michcr1122
Michcr1123
Michcr1124
Michcr1125
Michcr1126
Michcr1127
Michcr1128
Michcr1129
Michcr1130
Michcr1131
Michcr1132
Michcr1133
Michcr1134
Michcr1135
Michcr1136
Michcr1137
Michcr1138
Michcr1139
Michcr1140
Michcr1141
Michcr1142
Michcr1143
Michcr1144
Michcr1145
Michcr1146
Michcr1147
Michcr1148
Michcr1149
Michcr1150
Michcr1151
Michcr1152
Michcr1153
Michcr1154
Michcr1155
Michcr1156
Michcr1157
Michcr1158
Michcr1159
Michcr1160
Michcr1161
Michcr1162
Michcr1163
Michcr1164
Michcr1165
Michcr1166
Michcr1167
Michcr1168
Michcr1169
Michcr1170
Michcr1171
Michcr1172
Michcr1173
Michcr1174
Michcr1175
Michcr1176
Michcr1177
Michcr1178
Michcr1179
Michcr1180
Michcr1181
Michcr1182
Michcr1183
Michcr1184
Michcr1185
Michcr1186
Michcr1187
Michcr1188
Michcr1189
Michcr1190
Michcr1191
Michcr1192
Michcr1193
Michcr1194
Michcr1195
Michcr1196
Michcr1197
Michcr1198
Michcr1199
Michcr1200
Michcr1201
Michcr1202
Michcr1203
Michcr1204
Michcr1205
Michcr1206
Michcr1207
Michcr1208
Michcr1209
Michcr1210
Michcr1211
Michcr1212
Michcr1213
Michcr1214
Michcr1215
Michcr1216
Michcr1217
Michcr1218
Michcr1219
Michcr1220
Michcr1221
Michcr1222
Michcr1223
Michcr1224
Michcr1225
Michcr1226
Michcr1227
Michcr1228
Michcr1229
Michcr1230
Michcr1231
Michcr1232
Michcr1233
Michcr1234
Michcr1235
Michcr1236
Michcr1237
Michcr1238
Michcr1239
Michcr1240
Michcr1241
Michcr1242
Michcr1243
Michcr1244
Michcr1245
Michcr1246
Michcr1247
Michcr1248
Michcr1249
Michcr1250
Michcr1251
Michcr1252
Michcr1253
Michcr1254
Michcr1255
Michcr1256
Michcr1257
Michcr1258
Michcr1259
Michcr1260
Michcr1261
Michcr1262
Michcr1263
Michcr1264
Michcr1265
Michcr1266
Michcr1267
Michcr1268
Michcr1269
Michcr1270
Michcr1271
Michcr1272
Michcr1273
Michcr1274
Michcr1275
Michcr1276
Michcr1277
Michcr1278
Michcr1279
Michcr1280
Michcr1281
Michcr1282
Michcr1283
Michcr1284
Michcr1285
Michcr1286
Michcr1287
Michcr1288
Michcr1289
Michcr1290
Michcr1291
Michcr1292
Michcr1293
Michcr1294
Michcr1295
Michcr1296
Michcr1297
Michcr1298
Michcr1299
Michcr1300
Michcr1301
Michcr1302
Michcr1303
Michcr1304
Michcr1305
Michcr1306
Michcr1307
Michcr1308
Michcr1309
Michcr1310
Michcr1311
Michcr1312
Michcr1313
Michcr1314
Michcr1315
Michcr1316
Michcr1317
Michcr1318
Michcr1319
Michcr1320
Michcr1321
Michcr1322
Michcr1323
Michcr1324
Michcr1325
Michcr1326
Michcr1327
Michcr1328
Michcr1329
Michcr1330
Michcr1331
Michcr1332
Michcr1333
Michcr1334
Michcr1335
Michcr1336
Michcr1337
Michcr1338
Michcr1339
Michcr1340
Michcr1341
Michcr1342
Michcr1343
Michcr1344
Michcr1345
Michcr1346
Michcr1347
Michcr1348
Michcr1349
Michcr1350
Michcr1351
Michcr1352
Michcr1353
Michcr1354
Michcr1355
Michcr1356
Michcr1357
Michcr1358
Michcr1359
Michcr1360
Michcr1361
Michcr1362
Michcr1363
Michcr1364
Michcr1365
Michcr1366
Michcr1367
Michcr1368
Michcr1369
Michcr1370
Michcr1371
Michcr1372
Michcr1373
Michcr1374
Michcr1375
Michcr1376
Michcr1377
Michcr1378
Michcr1379
Michcr1380
Michcr1381
Michcr1382
Michcr1383
Michcr1384
Michcr1385
Michcr1386
Michcr1387
Michcr1388
Michcr1389
Michcr1390
Michcr1391
Michcr1392
Michcr1393
Michcr1394
Michcr1395
Michcr1396
Michcr1397
Michcr1398
Michcr1399
Michcr1400
Michcr1401
Michcr1402
Michcr1403
Michcr1404
Michcr1405
Michcr1406
Michcr1407
Michcr1408
Michcr1409
Michcr1410
Michcr1411
Michcr1412
Michcr1413
Michcr1414
Michcr1415
Michcr1416
Michcr1417
Michcr1418
Michcr1419
Michcr1420
Michcr1421
Michcr1422
Michcr1423
Michcr1424
Michcr1425
Michcr1426
Michcr1427
Michcr1428
Michcr1429
Michcr1430
Michcr1431
Michcr1432
Michcr1433
Michcr1434
Michcr1435
Michcr1436
Michcr1437
Michcr1438
Michcr1439
Michcr1440
Michcr1441
Michcr1442
Michcr1443
Michcr1444
Michcr1445
Michcr1446
Michcr1447
Michcr1448
Michcr1449
Michcr1450
Michcr1451
Michcr1452
Michcr1453
Michcr1454
Michcr1455
Michcr1456
Michcr1457
Michcr1458
Michcr1459
Michcr1460
Michcr1461
Michcr1462
Michcr1463
Michcr1464
Michcr1465
Michcr1466
Michcr1467
Michcr1468
Michcr1469
Michcr1470
Michcr1471
Michcr1472
Michcr1473
Michcr1474
Michcr1475
Michcr1476
Michcr1477
Michcr1478
Michcr1479
Michcr1480
Michcr1481
Michcr1482
Michcr1483
Michcr1484
Michcr1485
Michcr1486
Michcr1487
Michcr1488
Michcr1489
Michcr1490
Michcr1491
Michcr1492
Michcr1493
Michcr1494
Michcr1495
Michcr1496
Michcr1497
Michcr1498
Michcr1499
Michcr1500
Michcr1501
Michcr1502
Michcr1503
Michcr1504
Michcr1505
Michcr1506
Michcr1507
Michcr1508
Michcr1509
Michcr1510
Michcr1511
Michcr1512
Michcr1513
Michcr1514
Michcr1515
Michcr1516
Michcr1517
Michcr1518
Michcr1519
Michcr1520
Michcr1521
Michcr1522
Michcr1523
Michcr1524
Michcr1525
Michcr1526
Michcr1527
Michcr1528
Michcr1529
Michcr1530
Michcr1531
Michcr1532
Michcr1533
Michcr1534
Michcr1535
Michcr1536
Michcr1537
Michcr1538
Michcr1539
Michcr1540
Michcr1541
Michcr1542
Michcr1543
Michcr1544
Michcr1545
Michcr1546
Michcr1547
Michcr1548
Michcr1549
Michcr1550
Michcr1551
Michcr1552
Michcr1553
Michcr1554
Michcr1555
Michcr1556
Michcr1557
Michcr1558
Michcr1559
Michcr1560
Michcr1561
Michcr1562
Michcr1563
Michcr1564
Michcr1565
Michcr1566
Michcr1567
Michcr1568
Michcr1569
Michcr1570
Michcr1571
Michcr1572
Michcr1573
Michcr1574
Michcr1575
Michcr1576
Michcr1577
Michcr1578
Michcr1579
Michcr1580
Michcr1581
Michcr1582
Michcr1583
Michcr1584
Michcr1585
Michcr1586
Michcr1587
Michcr1588
Michcr1589
Michcr1590
Michcr1591
Michcr1592
Michcr1593
Michcr1594
Michcr1595
Michcr1596
Michcr1597
Michcr1598
Michcr1599
Michcr1600
Michcr1601
Michcr1602
Michcr1603
Michcr1604
Michcr1605
Michcr1606
Michcr1607
Michcr1608
Michcr1609
Michcr1610
Michcr1611
Michcr1612
Michcr1613
Michcr1614
Michcr1615
Michcr1616
Michcr1617
Michcr1618
Michcr1619
Michcr1620
Michcr1621
Michcr1622
Michcr1623
Michcr1624
Michcr1625
Michcr1626
Michcr1627
Michcr1628
Michcr1629
Michcr1630
Michcr1631
Michcr1632
Michcr1633
Michcr1634
Michcr1635
Michcr1636
Michcr1637
Michcr1638
Michcr1639
Michcr1640
Michcr1641
Michcr1642
Michcr1643
Michcr1644
Michcr1645
Michcr1646
Michcr1647
Michcr1648
Michcr1649
Michcr1650
Michcr1651
Michcr1652
Michcr1653
Michcr1654
Michcr1655
Michcr1656
Michcr1657
Michcr1658
Michcr1659
Michcr1660
Michcr1661
Michcr1662
Michcr1663
Michcr1664
Michcr1665
Michcr1666
Michcr1667
Michcr1668
Michcr1669
Michcr1670
Michcr1671
Michcr1672
Michcr1673
Michcr1674
Michcr1675
Michcr1676
Michcr1677
Michcr1678
Michcr1679
Michcr1680
Michcr1681
Michcr1682
Michcr1683
Michcr1684
Michcr1685
Michcr1686
Michcr1687
Michcr1688
Michcr1689
Michcr1690
Michcr1691
Michcr1692
Michcr1693
Michcr1694
Michcr1695
Michcr1696
Michcr1697
Michcr1698
Michcr1699
Michcr1700
Michcr1701
Michcr1702
Michcr1703
Michcr1704
Michcr1705
Michcr1706
Michcr1707
Michcr1708
Michcr1709
Michcr1710
Michcr1711
Michcr1712
Michcr1713
Michcr1714
Michcr1715
Michcr1716
Michcr1717
Michcr1718
Michcr1719
Michcr1720
Michcr1721
Michcr1722
Michcr1723
Michcr1724
Michcr1725
Michcr1726
Michcr1727
Michcr1728
Michcr1729
Michcr1730
Michcr1731
Michcr1732
Michcr1733
Michcr1734
Michcr1735
Michcr1736
Michcr1737
Michcr1738
Michcr1739
Michcr1740
Michcr1741
Michcr1742
Michcr1743
Michcr1744
Michcr1745
Michcr1746
Michcr1747
Michcr1748
Michcr1749
Michcr1750
Michcr1751
Michcr1752
Michcr1753
Michcr1754
Michcr1755
Michcr1756
Michcr1757
Michcr1758
Michcr1759
Michcr1760
Michcr1761
Michcr1762
Michcr1763
Michcr1764
Michcr1765
Michcr1766
Michcr1767
Michcr1768
Michcr1769
Michcr1770
Michcr1771
Michcr1772
Michcr1773
Michcr1774
Michcr1775
Michcr1776
Michcr1777
Michcr1778
Michcr1779
Michcr1780
Michcr1781
Michcr1782
Michcr1783
Michcr1784
Michcr1785
Michcr1786
Michcr1787
Michcr1788
Michcr1789
Michcr1790
Michcr1791
Michcr1792
Michcr1793
Michcr1794
Michcr1795
Michcr1796
Michcr1797
Michcr1798
Michcr1799
Michcr1800
Michcr1801
Michcr1802
Michcr1803
Michcr1804
Michcr1805
Michcr1806
Michcr1807
Michcr1808
Michcr1809
Michcr1810
Michcr1811
Michcr1812
Michcr1813
Michcr1814
Michcr1815
Michcr1816
Michcr1817
Michcr1818
Michcr1819
Michcr1820
Michcr1821
Michcr1822
Michcr1823
Michcr1824
Michcr1825
Michcr1826
Michcr1827
Michcr1828
Michcr1829
Michcr1830
Michcr1831
Michcr1832
Michcr1833
Michcr1834
Michcr1835
Michcr1836
Michcr1837
Michcr1838
Michcr1839
Michcr1840
Michcr1841
Michcr1842
Michcr1843
Michcr1844
Michcr1845
Michcr1846
Michcr1847
Michcr1848
Michcr1849
Michcr1850
Michcr1851
Michcr1852
Michcr1853
Michcr1854
Michcr1855
Michcr1856
Michcr1857
Michcr1858
Michcr1859
Michcr1860
Michcr1861
Michcr1862
Michcr1863
Michcr1864
Michcr1865
Michcr1866
Michcr1867
Michcr1868
Michcr1869
Michcr1870
Michcr1871
Michcr1872
Michcr1873
Michcr1874
Michcr1875
Michcr1876
Michcr1877
Michcr1878
Michcr1879
Michcr1880
Michcr1881
Michcr1882
Michcr1883
Michcr1884
Michcr1885
Michcr1886
Michcr1887
Michcr1888
Michcr1889
Michcr1890
Michcr1891
Michcr1892
Michcr1893
Michcr1894
Michcr1895
Michcr1896
Michcr1897
Michcr1898
Michcr1899
Michcr1900
Michcr1901
Michcr1902
Michcr1903
Michcr1904
Michcr1905
Michcr1906
Michcr1907
Michcr1908
Michcr1909
Michcr1910
Michcr1911
Michcr1912
Michcr1913
Michcr1914
Michcr1915
Michcr1916
Michcr1917
Michcr1918
Michcr1919
Michcr1920
Michcr1921
Michcr1922
Michcr1923
Michcr1924
Michcr1925
Michcr1926
Michcr1927
Michcr1928
Michcr1929
Michcr1930
Michcr1931
Michcr1932
Michcr1933
Michcr1934
Michcr1935
Michcr1936
Michcr1937
Michcr1938
Michcr1939
Michcr1940
Michcr1941
Michcr1942
Michcr1943
Michcr1944
Michcr1945
Michcr1946
Michcr1947
Michcr1948
Michcr1949
Michcr1950
Michcr1951
Michcr1952
Michcr1953
Michcr1954
Michcr1955
Michcr1956
Michcr1957
Michcr1958
Michcr1959
Michcr1960
Michcr1961
Michcr1962
Michcr1963
Michcr1964
Michcr1965
Michcr1966
Michcr1967
Michcr1968
Michcr1969
Michcr1970
Michcr1971
Michcr1972
Michcr1973
Michcr1974
Michcr1975
Michcr1976
Michcr1977
Michcr1978
Michcr1979
Michcr1980
Michcr1981
Michcr1982
Michcr1983
Michcr1984
Michcr1985
Michcr1986
Michcr1987
Michcr1988
Michcr1989
Michcr1990
Michcr1991
Michcr1992
Michcr1993
Michcr1994
Michcr1995
Michcr1996
Michcr1997
Michcr1998
Michcr1999
Michcr2000
Michcr2001
Michcr2002
Michcr2003
Michcr2004
Michcr2005
Michcr2006
Michcr2007
Michcr2008
Michcr2009
Michcr2010
Michcr2011
Michcr2012
Michcr2013
Michcr2014
Michcr2015
Michcr2016
Michcr2017
Michcr2018
Michcr2019
Michcr2020
Michcr2021
Michcr2022
Michcr2023
Michcr2024
Michcr2025
Michcr2026
Michcr2027
Michcr2028
Michcr2029
Michcr2030
Michcr2031
Michcr2032
Michcr2033
Michcr2034
Michcr2035
Michcr2036
Michcr2037
Michcr2038
Michcr2039
Michcr2040
Michcr2041
Michcr2042
Michcr2043
Michcr2044
Michcr2045
Michcr2046
Michcr2047
Michcr2048
Michcr2049
Michcr2050
Michcr2051
Michcr2052
Michcr2053
Michcr2054
Michcr2055
Michcr2056
Michcr2057
Michcr2058
Michcr2059
Michcr2060
Michcr2061
Michcr2062
Michcr2063
Michcr2064
Michcr2065
Michcr2066
Michcr2067
Michcr2068
Michcr2069
Michcr2070
Michcr2071
Michcr2072
Michcr2073
Michcr2074
Michcr2075
Michcr2076
Michcr2077
Michcr2078
Michcr2079
Michcr2080
Michcr2081
Michcr2082
Michcr2083
Michcr2084
Michcr2085
Michcr2086
Michcr2087
Michcr2088
Michcr2089
Michcr2090
Michcr2091
Michcr2092
Michcr2093
Michcr2094
Michcr2095
Michcr2096
Michcr2097
Michcr2098
Michcr2099
Michcr2100
Michcr2101
Michcr2102
Michcr2103
Michcr2104
Michcr2105
Michcr2106
Michcr2107
Michcr2108
Michcr2109
Michcr2110
Michcr2111
Michcr2112
Michcr2113
Michcr2114
Michcr2115
Michcr2116
Michcr2117
Michcr2118
Michcr2119
Michcr2120
Michcr2121
Michcr2122
Michcr2123
Michcr2124
Michcr2125
Michcr2126
Michcr2127
Michcr2128
Michcr2129
Michcr2130
Michcr2131
Michcr2132
Michcr2133
Michcr2134
Michcr2135
Michcr2136
Michcr2137
Michcr2138
Michcr2139
Michcr2140
Michcr2141
Michcr2142
Michcr2143
Michcr2144
Michcr2145
Michcr2146
Michcr2147
Michcr2148
Michcr2149
Michcr2150
Michcr2151
Michcr2152
Michcr2153
Michcr2154
Michcr2155
Michcr2156
Michcr2157
Michcr2158
Michcr2159
Michcr2160
Michcr2161
Michcr2162
Michcr2163
Michcr2164
Michcr2165
Michcr2166
Michcr2167
Michcr2168
Michcr2169
Michcr2170
Michcr2171
Michcr2172
Michcr2173
Michcr2174
Michcr2175
Michcr2176
Michcr2177
Michcr2178
Michcr2179

Figure A6-52 : 2019 Winter Peak Post-Project Alternative 2 Case A - Contingency of 7L749\749L\7LB749 (Edgerton 899S - Briker 880S - Lloydminster 716S)

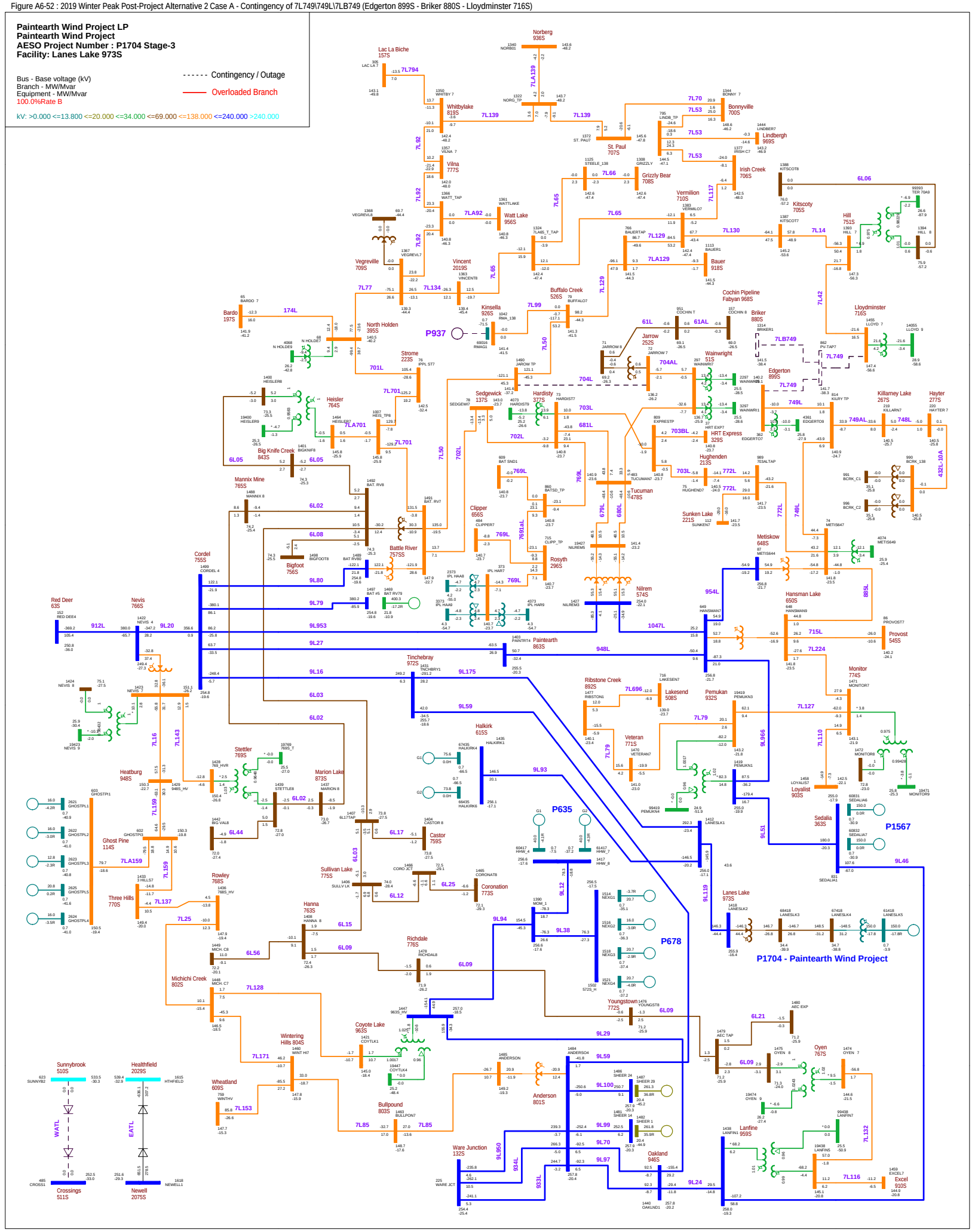

Figure A6-53 : 2019 Winter Peak Post-Project Alternative 2 Case A - Contingency of 899ST3A (Edgerton 899S Transformer T3A)

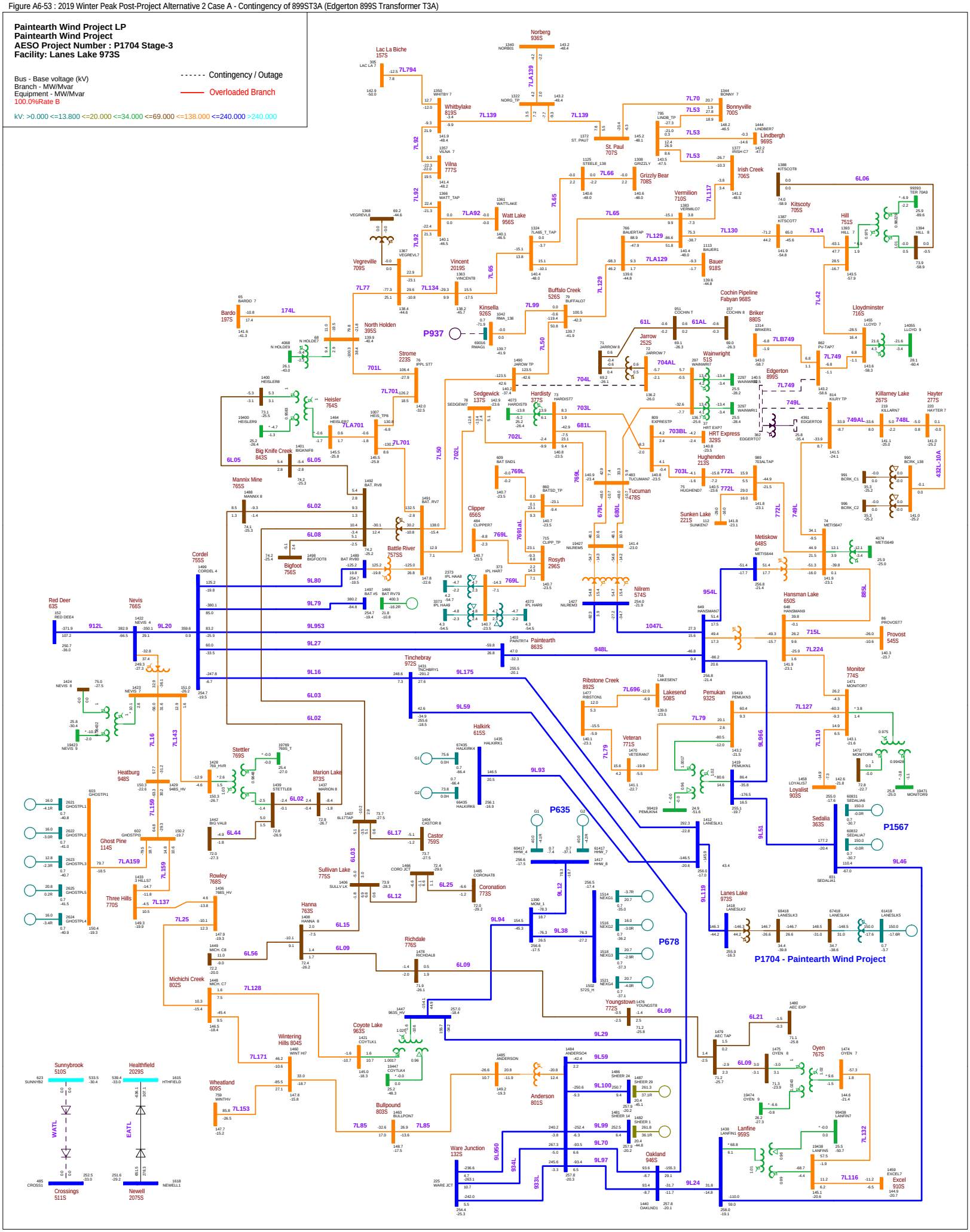

Figure A6-54 : 2019 Winter Peak Post-Project Alternative 2 Case A - Contingency of 912L\9L912 (Red Deer 63S - Nevis 766S)

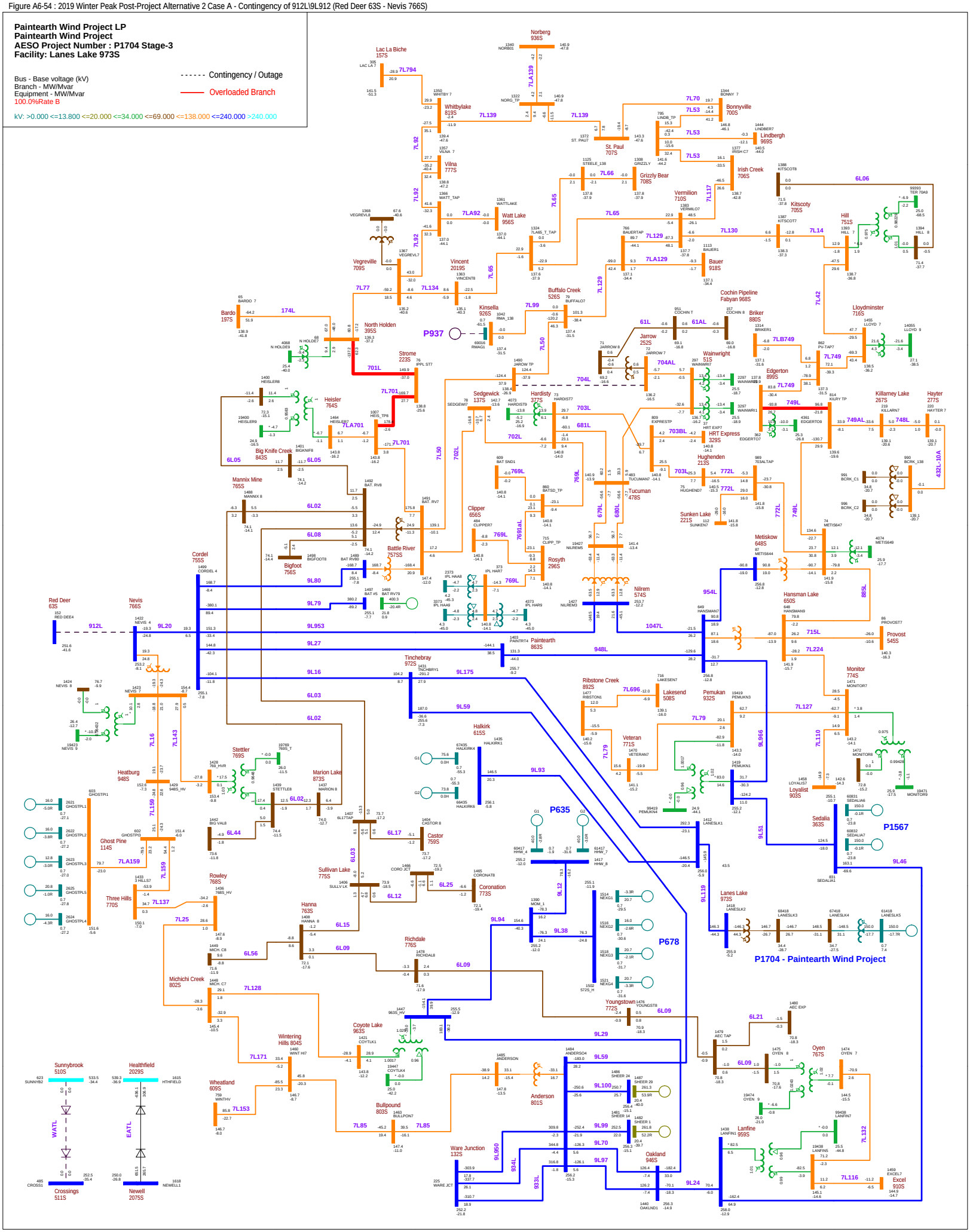

Figure A6-55 : 2019 Winter Peak Post-Project Alternative 2 Case A - Contingency of 9L20 (Nevis 766S - Cordel 755S)

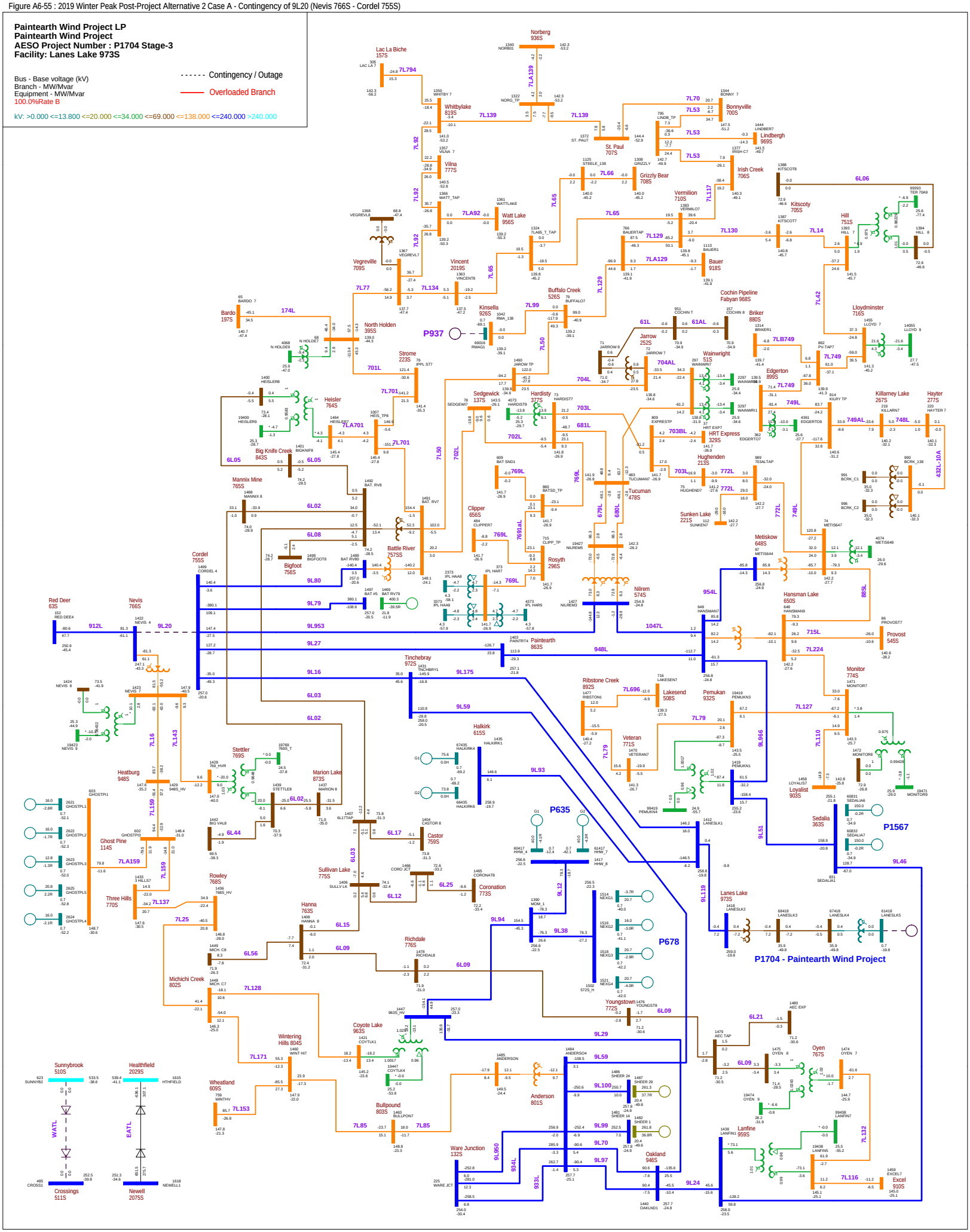

Figure A6-56 : 2019 Winter Peak Post-Project Alternative 2 Case B - Contingency of 395ST1 (North Holden 395S Transformer T1)

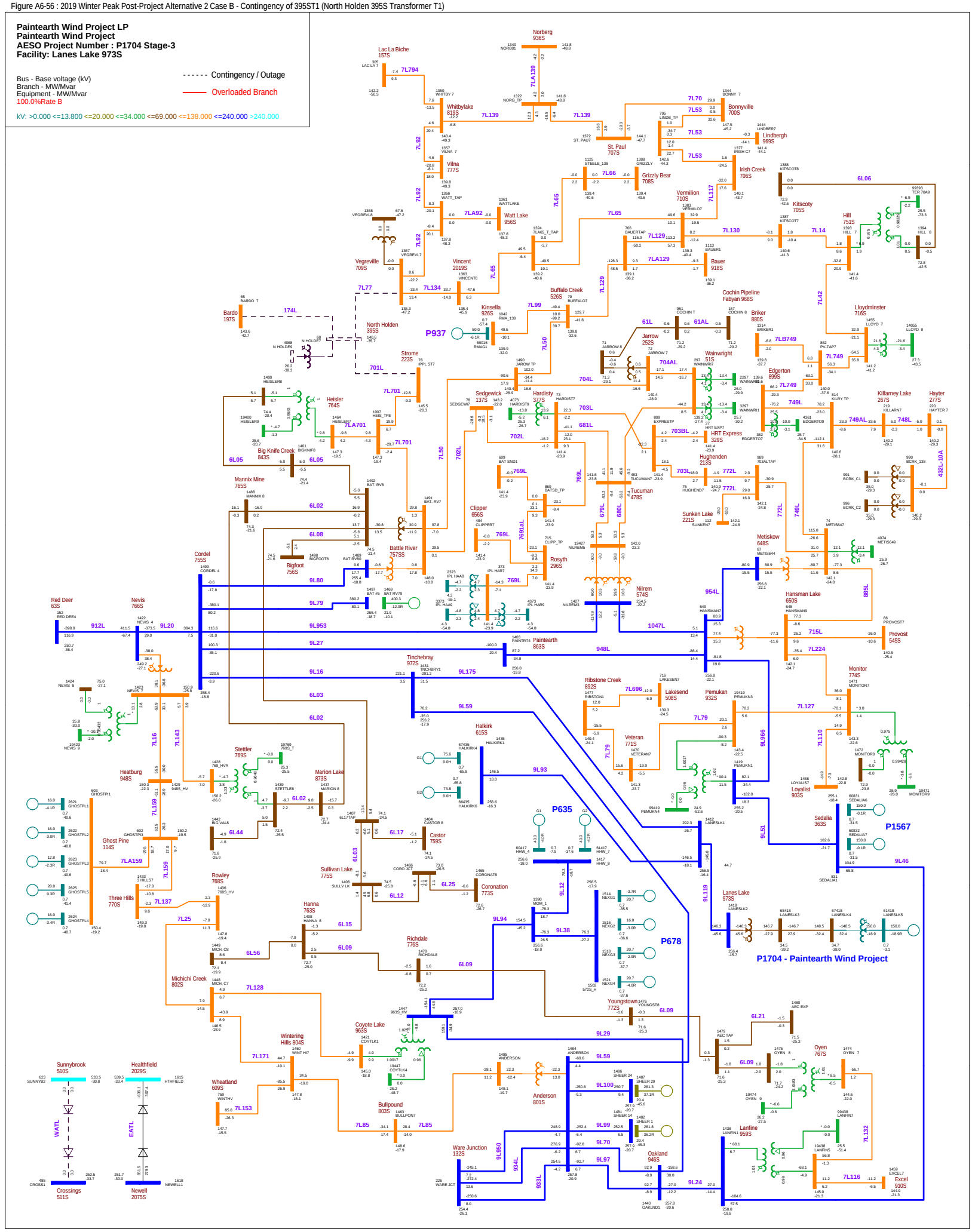

Figure A6-57 : 2019 Winter Peak Post-Project Alternative 2 Case B - Contingency of 701L (North Holden 395S - Strome 223S)

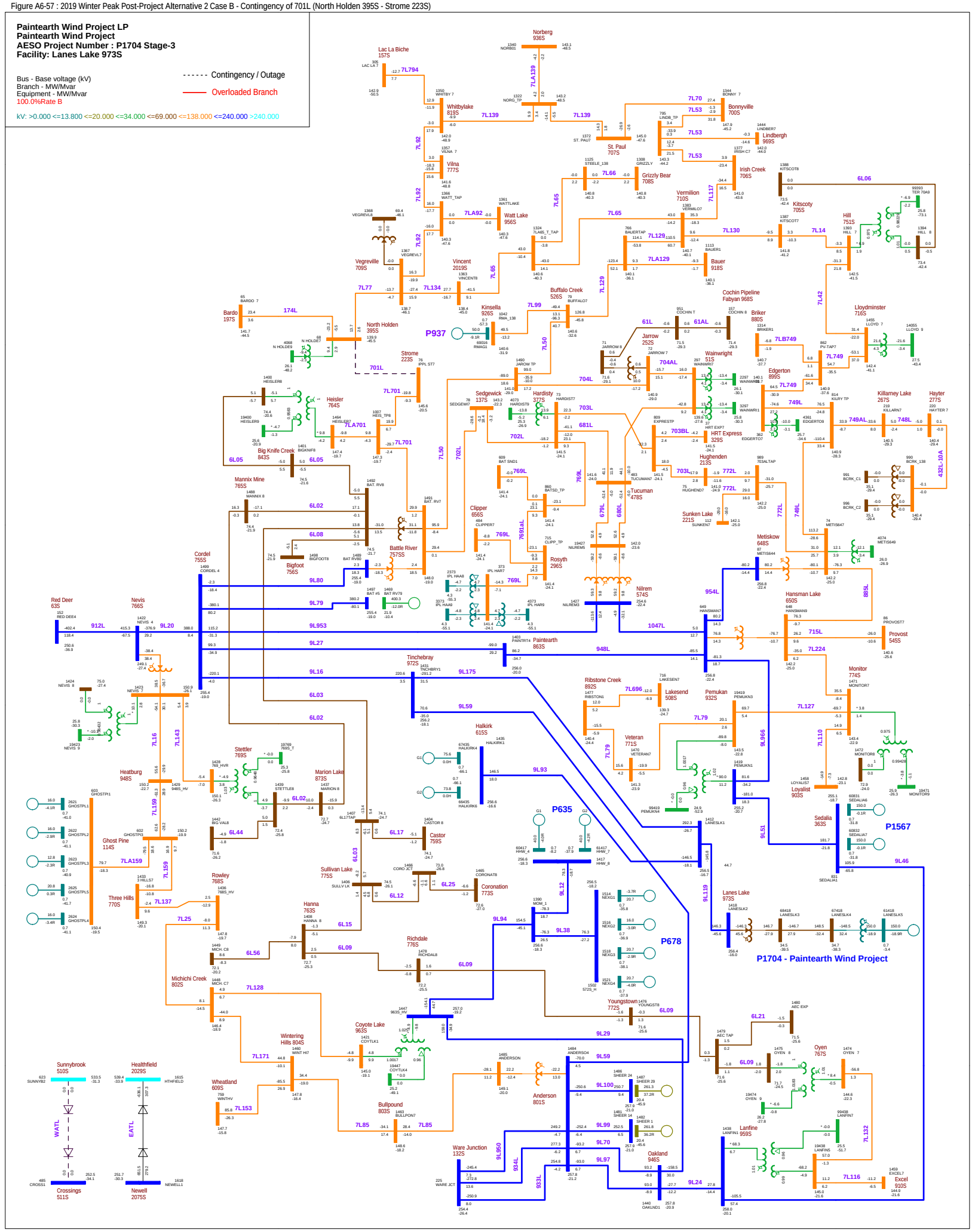

Figure A6-58 : 2019 Winter Peak Post-Project Alternative 2 Case B - Contingency of 749L\749AL (Metiskow 648S - Edgerton 899S)

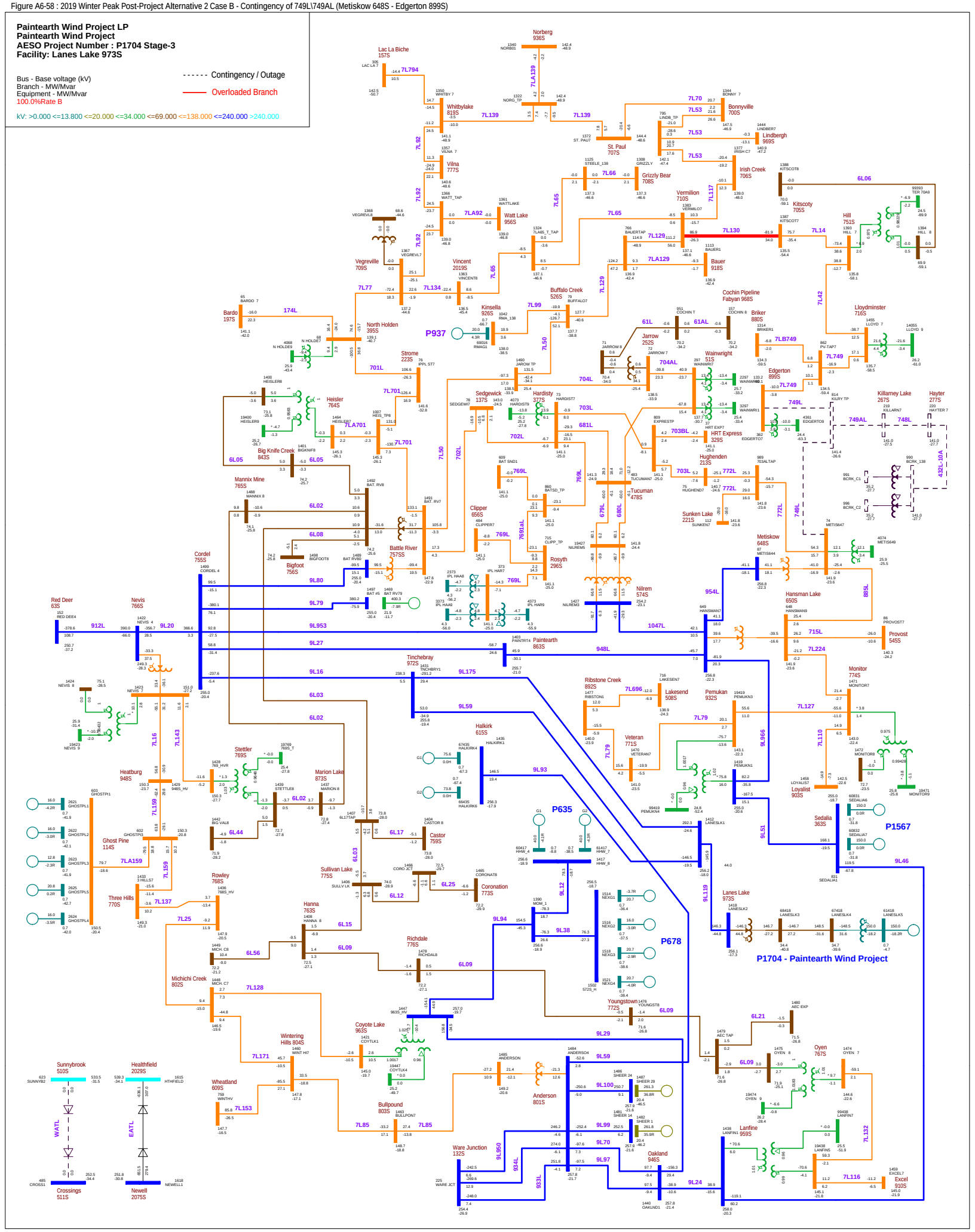

Figure A6-59 : 2019 Winter Peak Post-Project Alternative 2 Case B - Contingency of 766S901T (Nevis 766S Transformer 901T)

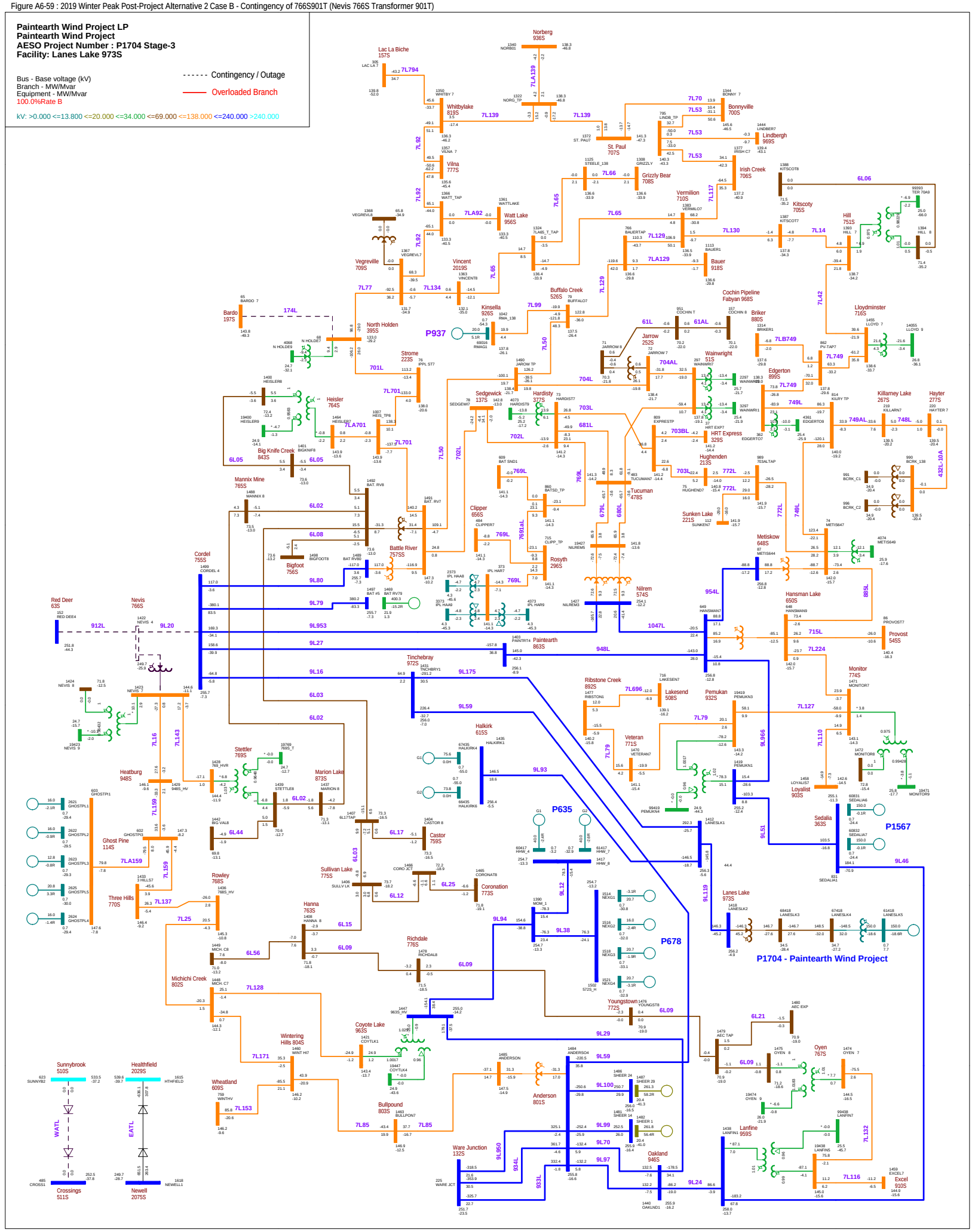

Figure A6-60 : 2019 Winter Peak Post-Project Alternative 2 Case B - Contingency of 7L42 (Hill 751S - Lloydminster 716S)

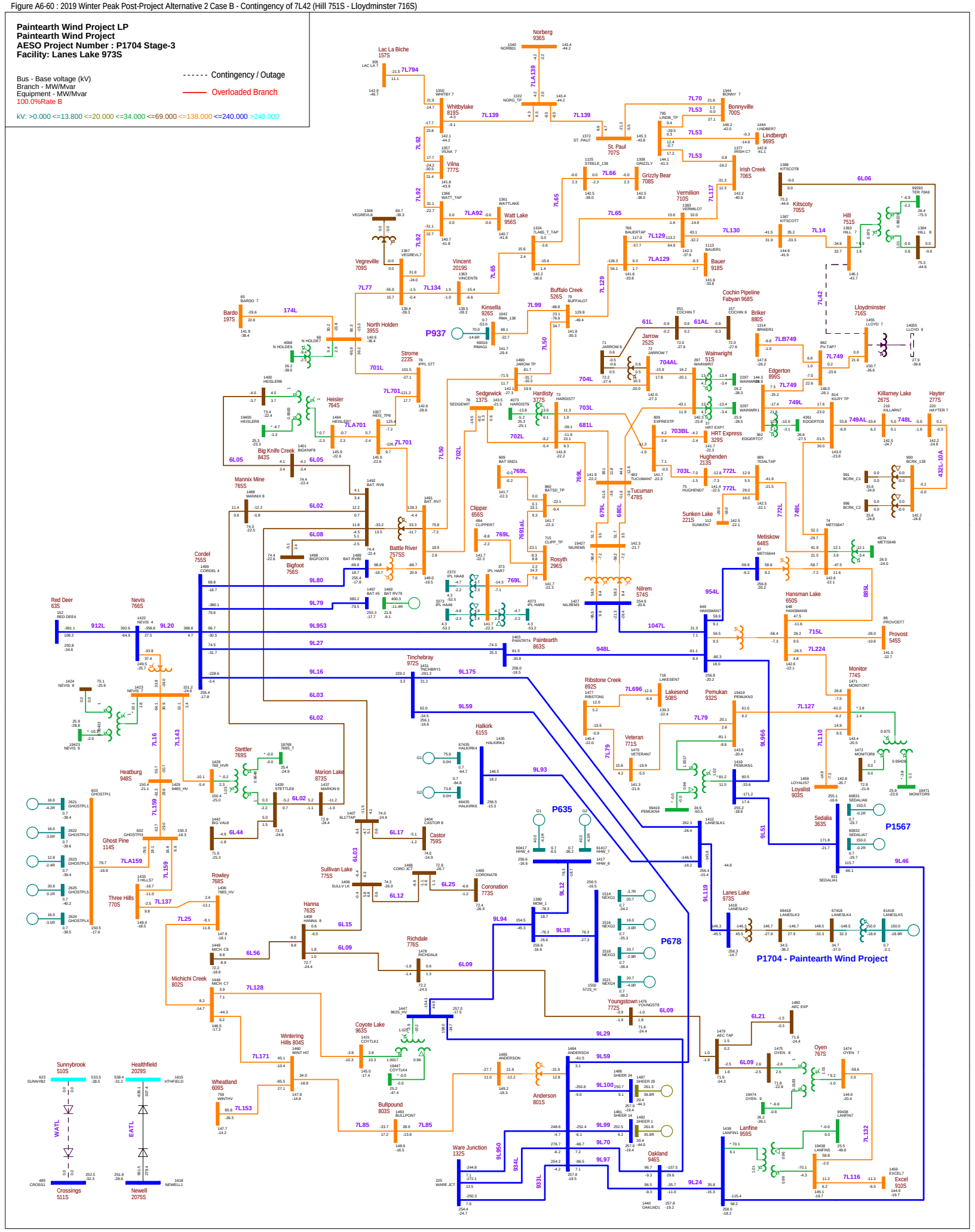

Figure A6-61 : 2019 Winter Peak Post-Project Alternative 2 Case B - Contingency of 7L701\7LA701\701L (Battle River 757S - Heisler 764S - Strome 223S)

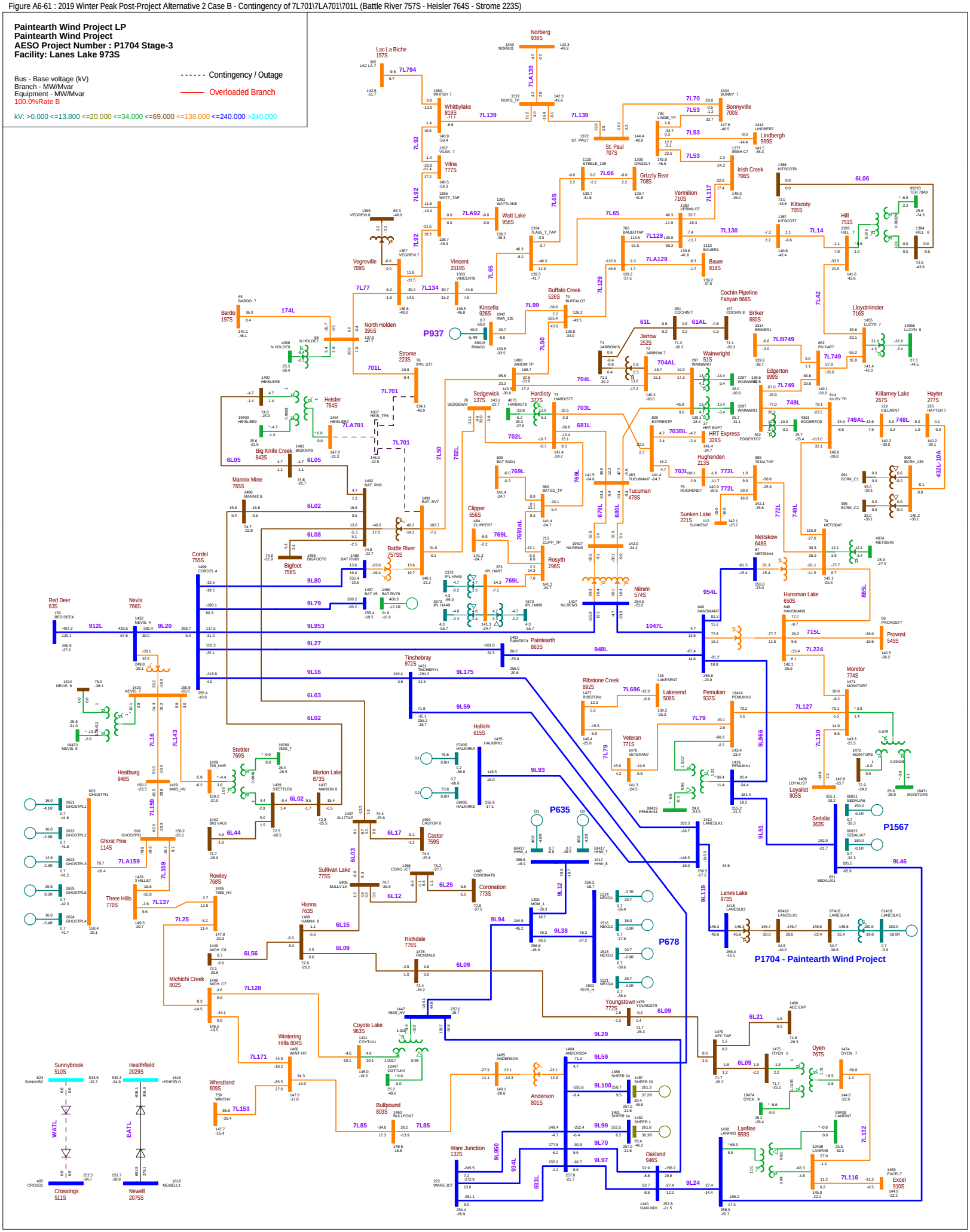

Figure A6-62 : 2019 Winter Peak Post-Project Alternative 2 Case B - Contingency of 7L749\749L\7LB749 (Edgerton 899S - Briker 880S - Lloydminster 716S)

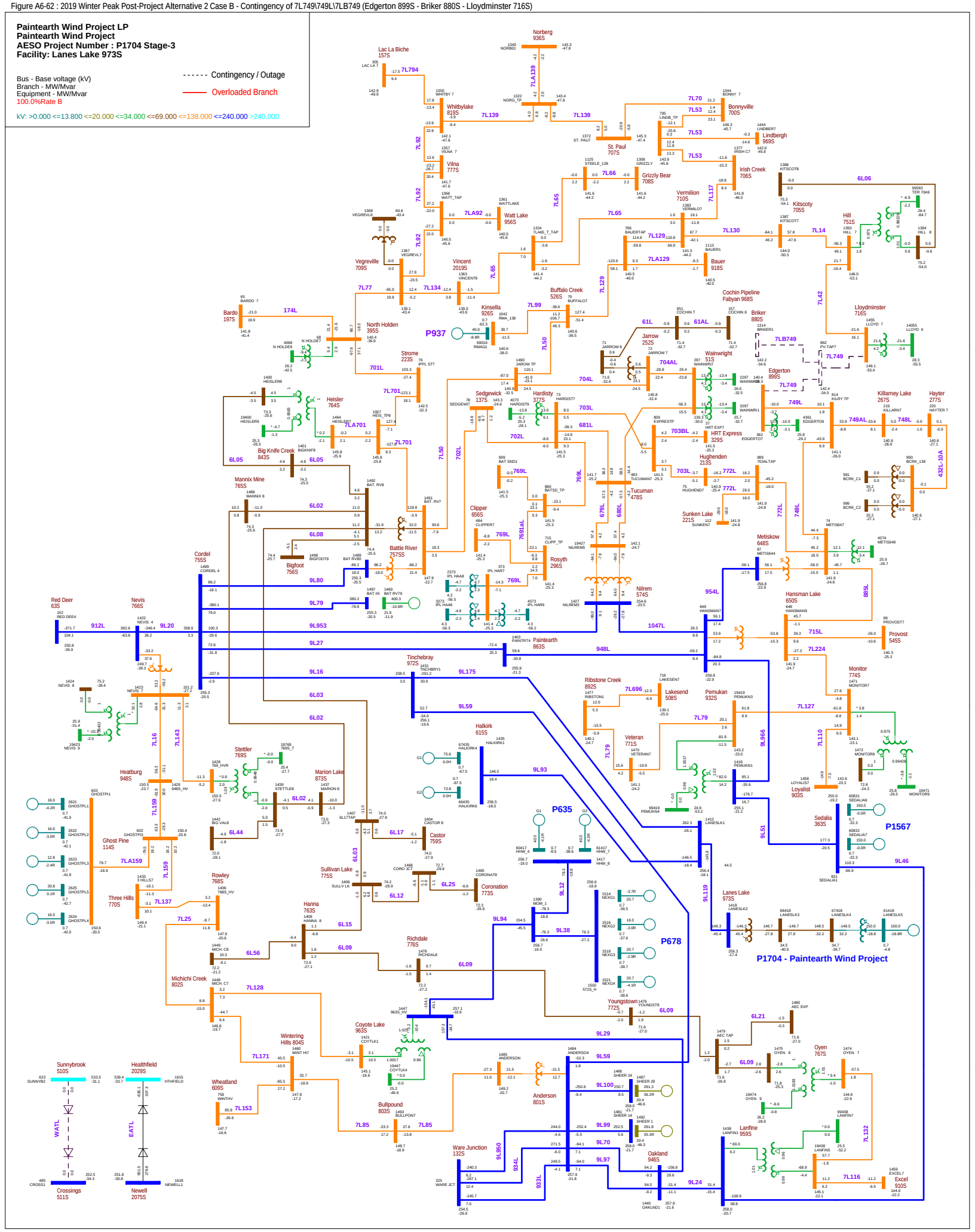

Figure A6-63 : 2019 Winter Peak Post-Project Alternative 2 Case B - Contingency of 7L77 (North Holden 395S - Vegreville 709S)

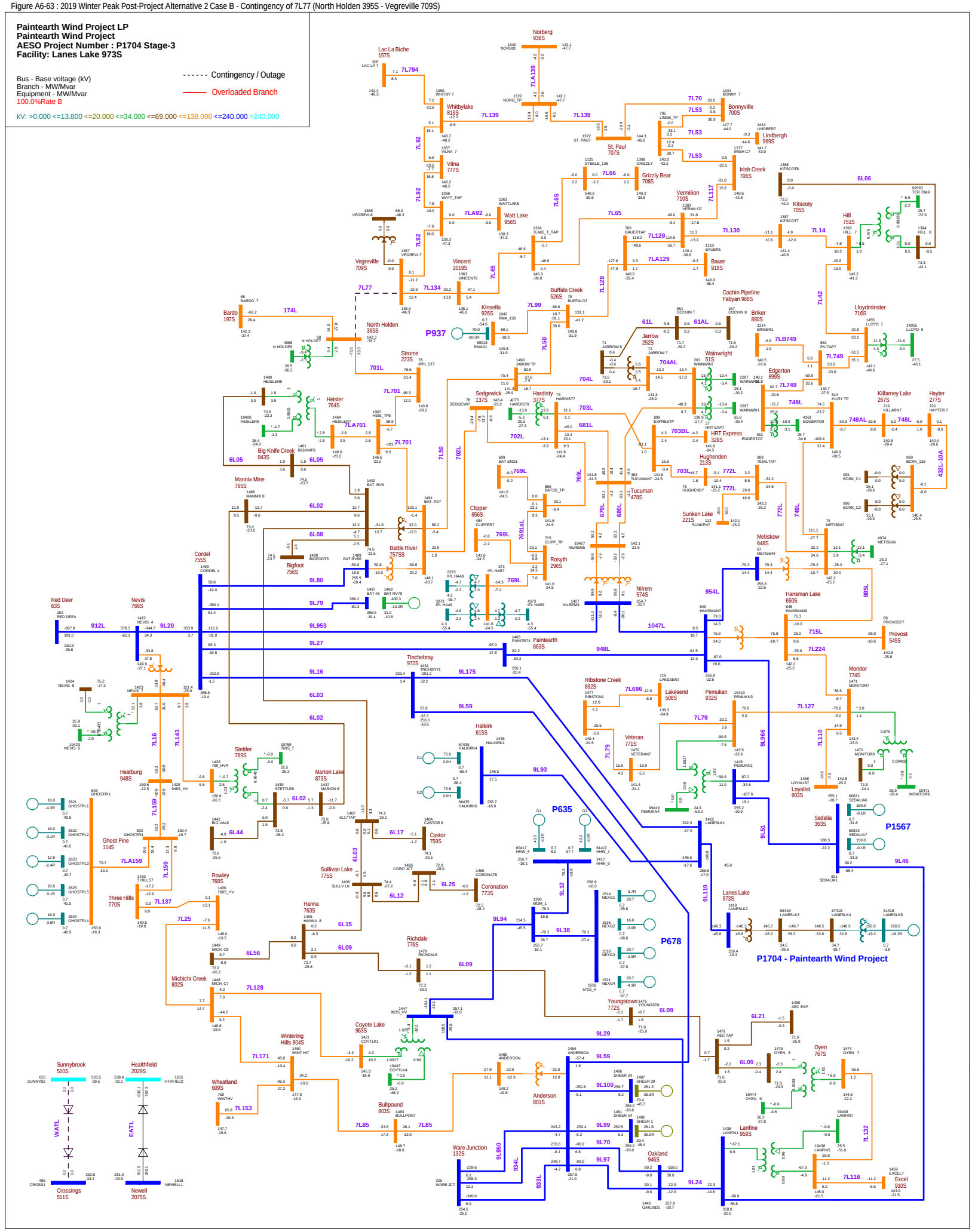

Figure A6-64 : 2019 Winter Peak Post-Project Alternative 2 Case B - Contingency of 899ST3A (Edgerton 899S Transformer T3A)

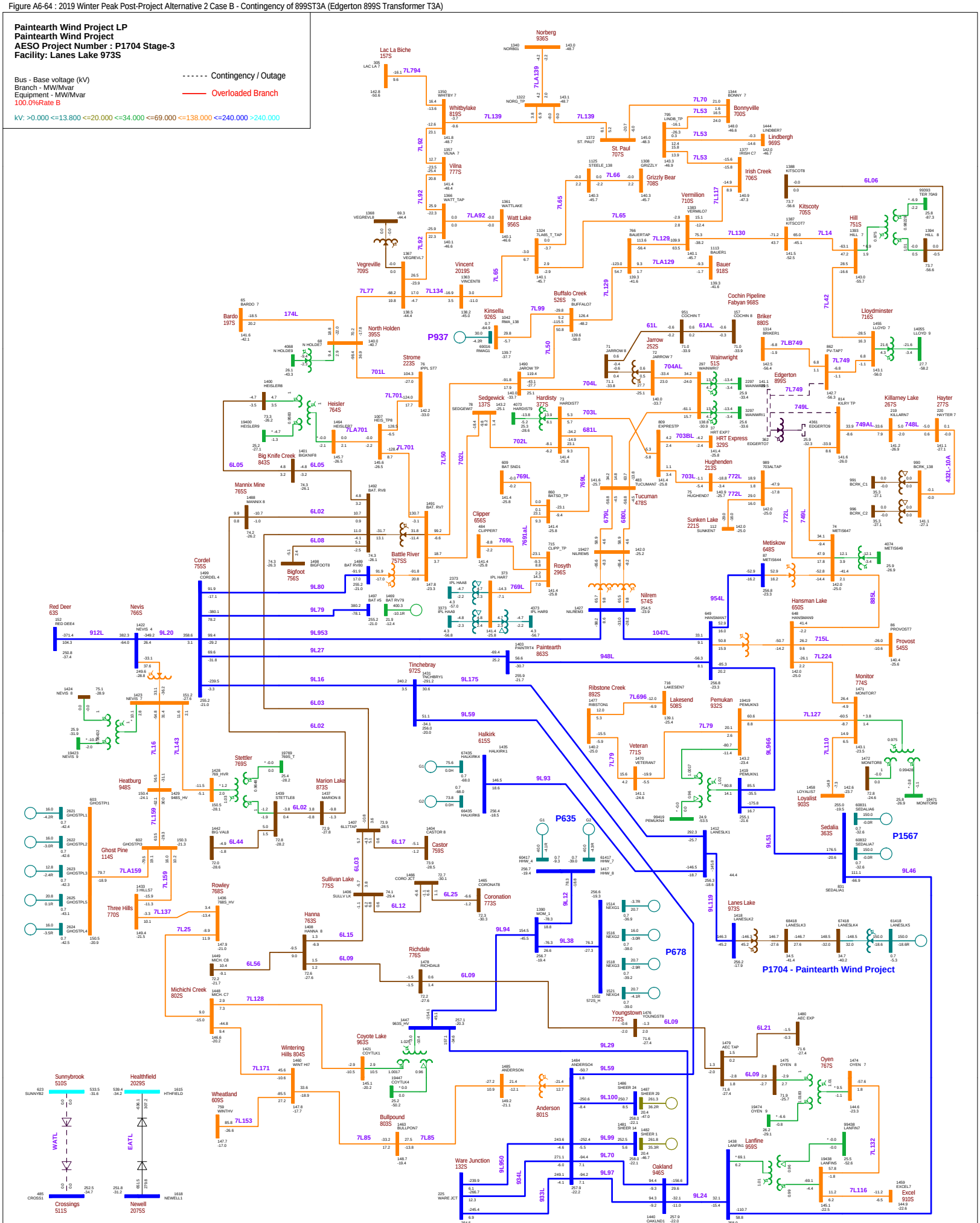

Figure A6-65 : 2019 Winter Peak Post-Project Alternative 2 Case B - Contingency of 912L\9L912 (Red Deer 63S - Nevis 766S)

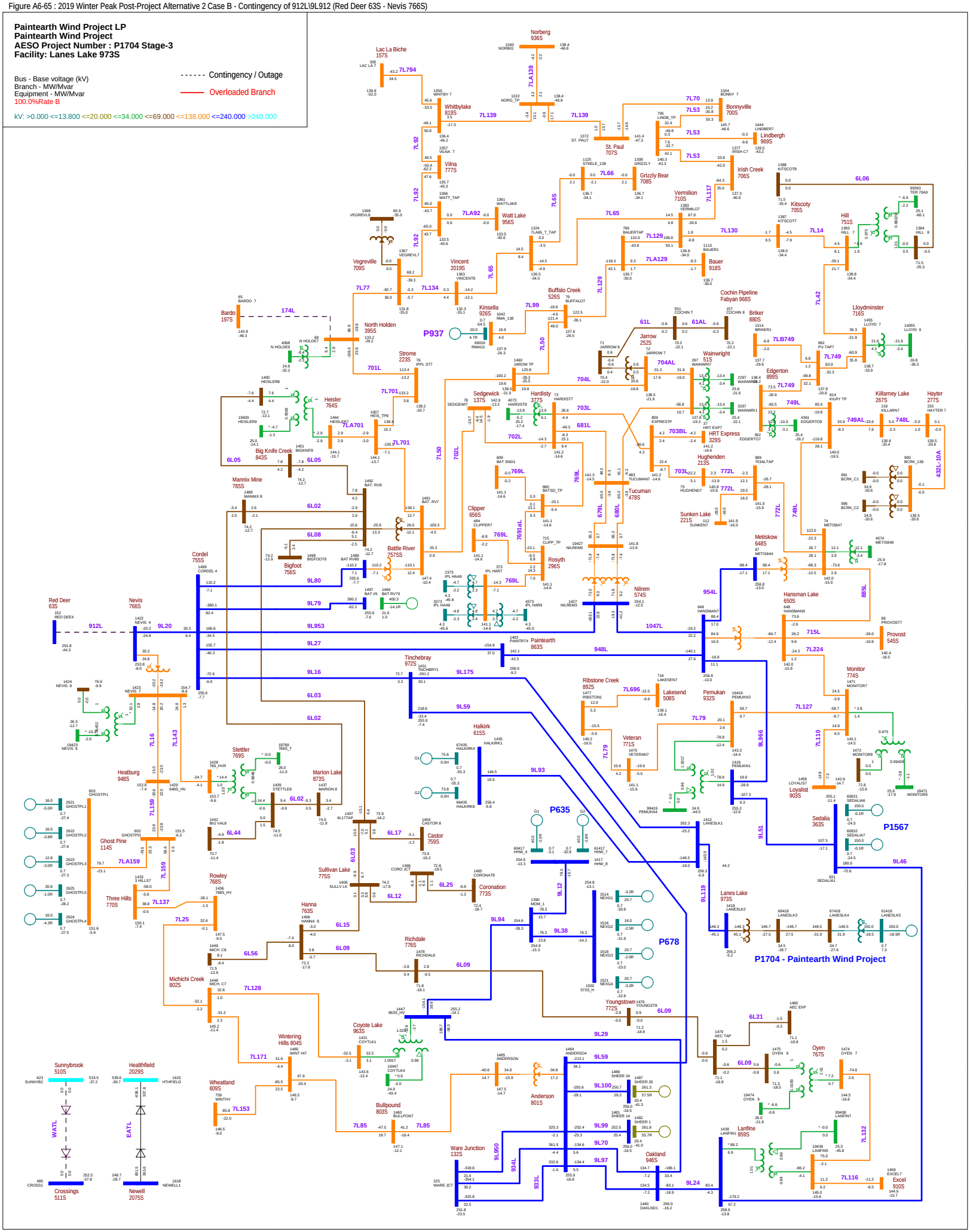

Figure A6-66 : 2019 Winter Peak Post-Project Alternative 2 Case B - Contingency of 9L20 (Nevis 766S - Cordel 755S)

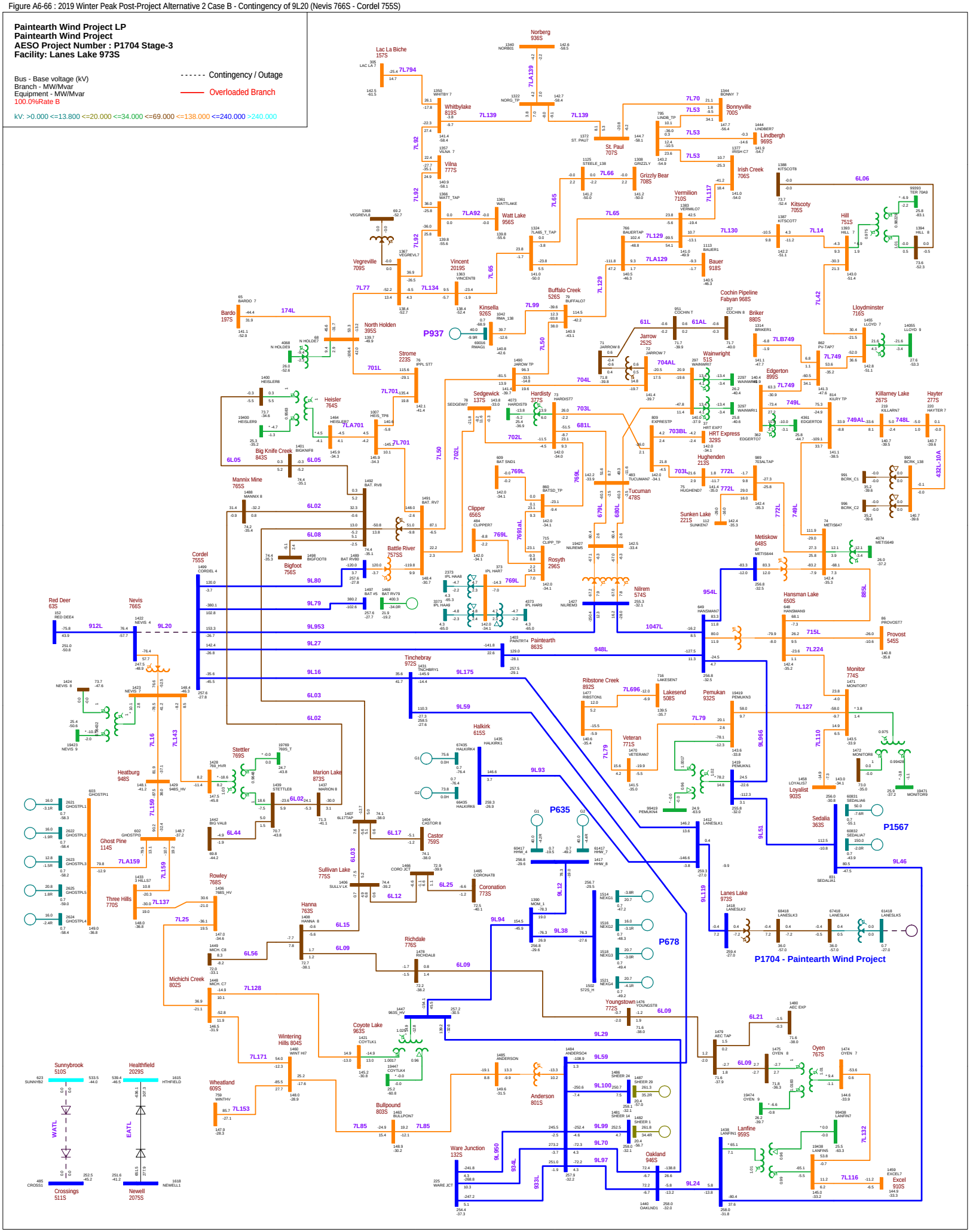

Figure A6-67 : 2019 Winter Peak Post-Project Alternative 2 Case B - Contingency of 9L29 (Oakland 946S - Coyote Lake 963S)

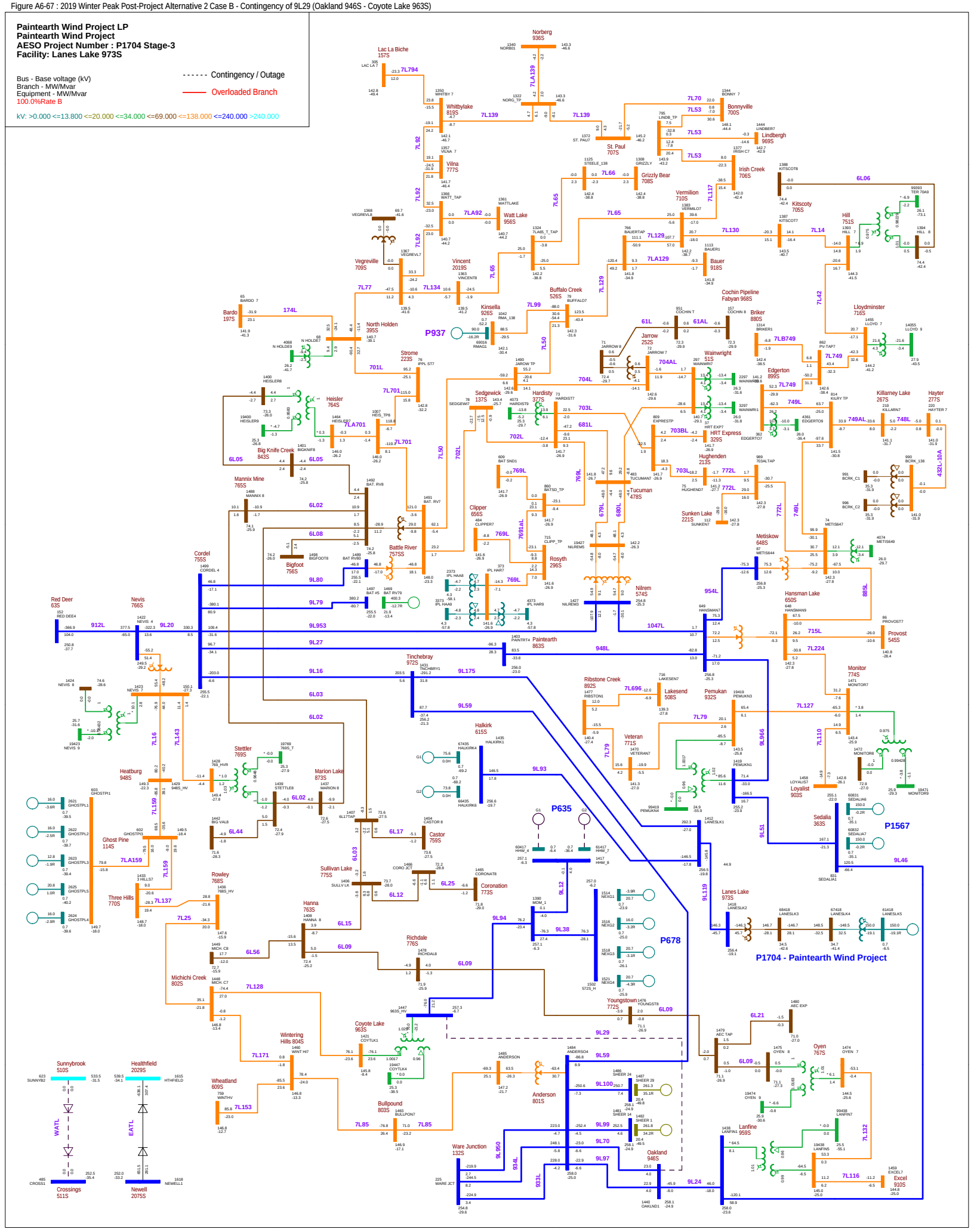

Figure A6-68 : 2019 Winter Peak Post-Project Alternative 2 Case B - Contingency of EATL (Newell 2075S - Heathfield 2029S)

Paintearth Wind Project LP
Paintearth Wind Project
AESO Project Number : P1704 Stage-3
Facility: Lanes Lake 973S

Bus - Base voltage (kV)
Branch - MW/Mvar
Equipment - MW/Mvar
100.0%Rate B

Contingency / Outage
Overloaded Branch

kV: >0.000 <=13.800 <=20.000 <=34.000 <=69.000 <=138.000 <=240.000 >240.000

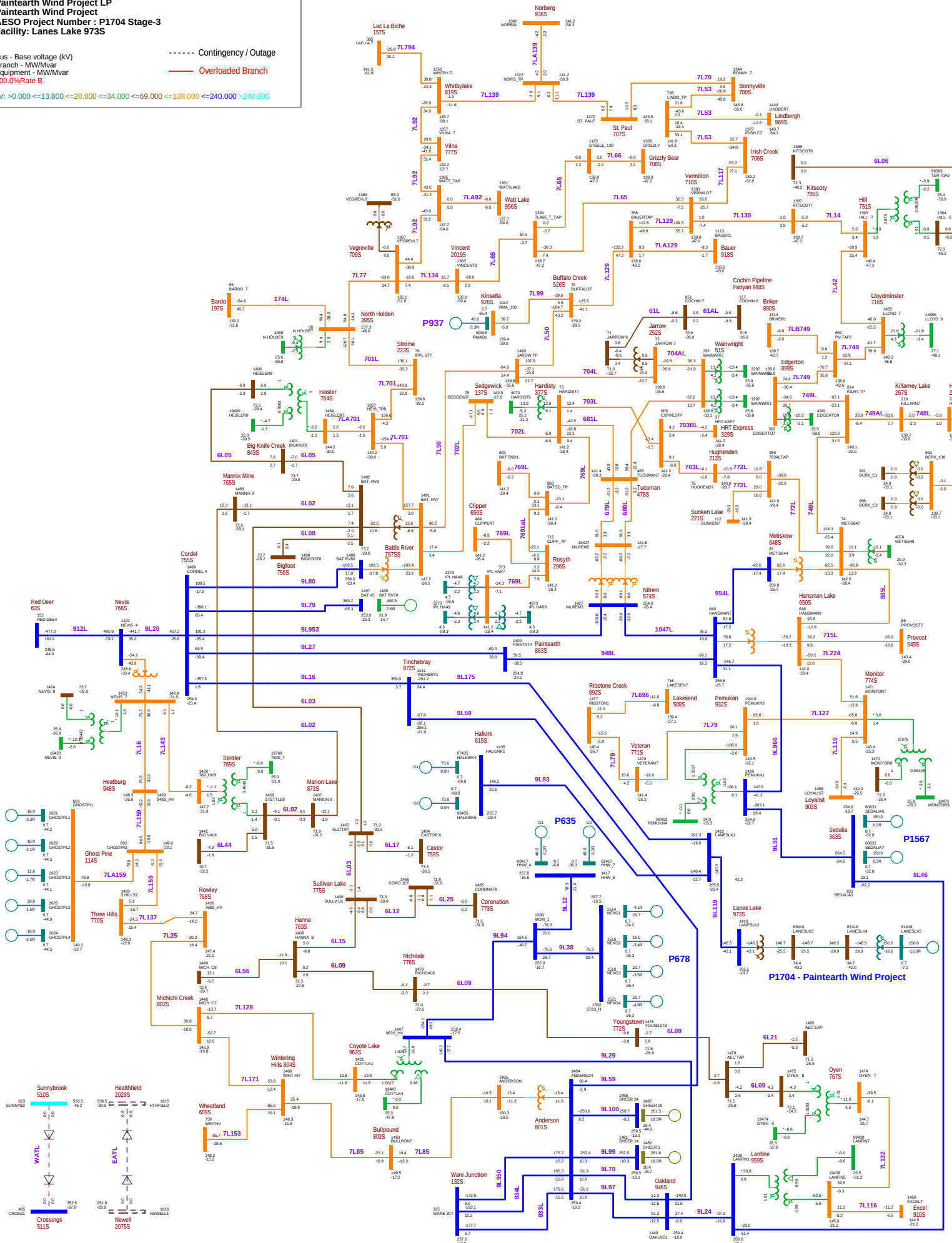

Attachment A7

Constraint Effective Factors

Table A7-1: Generator Type

Generating Facility Name and Unit Number	Wintering Hills	Sharp Hills	Suncor Hand Hills	BlueEarth Hand Hills	Halkirk	Ghostpine	Bull Creek DG	Battle River #3	Battle River #4	Battle River #5	Sheerness #1	Sheerness #2	Planned Irma Wind Power Project	Paintearth
Type	Wind	Wind	Wind	Wind	Wind	Wind	Wind	Coal	Coal	Coal	Coal	Coal	Wind	Wind

Table A7-2: Constraint Effective Factors under N-1 Contingencies for Post-Project Alternative 2 Scenarios

Scenario and Case Name	Contingency (System Element Lost)	Details of Violation (Violation Observed On)	Generating Facility Name and Unit Number													
			Wintering Hills	Sharp Hills	Suncor Hand Hills	BlueEarth Hand Hills	Halkirk	Ghost Pine	Bull Creek DG	Battle River #3	Battle River #4	Battle River #5	Sheerness #1	Sheerness #2	Planned Irma Wind Power Project	Paintearth
2019 Summer Light Post-Project Alternative 2 Case A	9L20 (Nevis 766S - Cordel 755S)	766S901T (Nevis 766S Transformer 901T)	17.0%	8.3%	9.7%	9.7%	8.7%	57.8%	8.4%	10.1%	10.0%	8.9%	8.0%	8.0%	--	8.7%
	9L29 (Oakland 946S - Coyote Lake 963S)	766S901T (Nevis 766S Transformer 901T)	23.1%	2.2%	26.4%	26.4%	1.2%	65.7%	1.8%	4.3%	4.2%	1.0%	2.8%	2.8%	--	1.1%
		7L159 (Ghost Pine 114S Tap - Heatburg 948S)	25.8%	1.1%	30.4%	30.4%	-0.2%	73.6%	0.2%	-0.3%	-0.3%	-0.4%	2.2%	2.2%	--	-0.2%
		7L16 (Nevis 766S - Heatburg 948S)	23.6%	1.0%	27.6%	27.5%	-0.1%	68.1%	0.2%	-0.2%	-0.2%	-0.4%	2.1%	2.1%	--	-0.1%
		7L85 (Bullpound 803S - Anderson 801S)	59.6%	-0.7%	39.2%	39.2%	0.5%	21.4%	0.3%	1.3%	1.3%	0.7%	-2.4%	-2.4%	--	0.4%
		7L85 (Wintering Hills 804S - Bullpound 803S)	64.0%	-0.7%	42.7%	42.7%	0.5%	23.2%	0.3%	1.4%	1.4%	0.8%	-2.6%	-2.6%	--	0.5%
		801S901T (Anderson 801S Transformer 901T)	54.3%	-0.6%	34.9%	34.9%	0.4%	19.3%	0.2%	1.1%	1.1%	0.7%	-2.2%	-2.2%	--	0.4%
2019 Summer Light Post-Project Alternative 2 Case B	9L20 (Nevis 766S - Cordel 755S)	766S901T (Nevis 766S Transformer 901T)	16.3%	7.9%	9.3%	9.3%	8.3%	57.3%	8.0%	9.6%	9.5%	8.5%	7.7%	7.7%	6.6%	8.3%
	9L29 (Oakland 946S - Coyote Lake 963S)	766S901T (Nevis 766S Transformer 901T)	22.6%	2.1%	25.8%	25.7%	1.1%	65.2%	1.7%	4.2%	4.2%	1.0%	2.7%	2.7%	2.2%	1.1%
		7L159 (Ghost Pine 114S Tap - Heatburg 948S)	25.5%	1.1%	30.0%	29.9%	-0.2%	73.6%	0.2%	-0.3%	-0.3%	-0.4%	2.2%	2.2%	-0.2%	-0.2%
		7L16 (Nevis 766S - Heatburg 948S)	23.2%	1.0%	27.1%	27.0%	-0.1%	67.9%	0.2%	-0.2%	-0.2%	-0.3%	2.0%	2.0%	-0.2%	-0.1%
		7L85 (Bullpound 803S - Anderson 801S)	59.8%	-0.7%	39.6%	39.5%	0.5%	21.7%	0.3%	1.3%	1.3%	0.7%	-2.4%	-2.4%	0.8%	0.4%
		7L85 (Wintering Hills 804S - Bullpound 803S)	64.1%	-0.7%	43.0%	43.0%	0.5%	23.4%	0.3%	1.4%	1.4%	0.8%	-2.6%	-2.6%	0.9%	0.5%
2019 Summer Peak Post-Project Alternative 2 Case A	395ST1 (North Holden 395S Transformer T1)	7L50 (Buffalo Creek 526S - Jarrow 252S Tap)	2.2%	3.1%	2.3%	2.3%	4.3%	2.3%	-0.6%	8.3%	8.3%	4.6%	2.2%	2.2%	--	4.3%
	526ST1 or 526ST2 (Buffalo Creek 526S Transformer T1 or T2)	749L (Edgerton 899S - Killarney Lake 267S Tap)	1.7%	4.1%	2.0%	2.0%	2.7%	1.4%	17.6%	2.1%	2.1%	2.8%	1.9%	1.9%	-	2.6%
	701L (North Holden 395S - Strome 223S)	7L50 (Buffalo Creek 526S - Jarrow 252S Tap)	2.6%	3.7%	2.6%	2.6%	4.9%	2.6%	0.7%	9.2%	9.2%	5.3%	2.6%	2.6%	--	4.9%
	749L\749AL (Metiskow 648S - Edgerton 899S)	7L129 (Buffalo Creek 526S - Bauer 918S Tap)	2.1%	3.7%	2.3%	2.3%	4.0%	2.0%	-	6.2%	6.2%	4.2%	2.3%	2.2%	--	3.9%
		7L50 (Buffalo Creek 526S - Jarrow 252S Tap)	2.3%	4.0%	2.5%	2.5%	4.3%	2.2%	-	6.7%	6.7%	4.6%	2.4%	2.4%	--	4.2%
	766S901T (Nevis 766S Transformer 901T)	701L (North Holden 395S - Strome 223S)	6.8%	8.6%	6.5%	6.5%	11.5%	8.6%	9.7%	17.6%	17.6%	12.1%	6.4%	6.4%	--	11.4%
		7L50 (Buffalo Creek 526S - Jarrow 252S Tap)	4.3%	5.9%	4.3%	4.3%	7.6%	5.1%	3.6%	10.4%	10.4%	8.1%	4.2%	4.2%	--	7.5%
	7L42 (Hill 751S - Lloydminster 716S)	7L50 (Buffalo Creek 526S - Jarrow 252S Tap)	2.4%	4.2%	2.6%	2.6%	4.4%	2.3%	6.4%	6.8%	6.9%	4.7%	2.5%	2.5%	--	4.4%
	7L50 (Battle River 757S - Jarrow 252S - Buffalo Creek 526S)	749L (Edgerton 899S - Killarney Lake 267S Tap)	1.7%	4.1%	1.9%	1.9%	2.7%	1.3%	17.9%	1.9%	1.9%	2.8%	1.9%	1.9%	-	2.6%
		749L (Metiskow 648S - Killarney Lake 267S Tap)	1.8%	4.4%	2.1%	2.1%	2.8%	1.4%	-87.8%	2.1%	2.1%	3.0%	2.0%	2.0%	-	2.8%
	7L701\7LA701\701L (Battle River 757S - Heisler 764S - Strome 223S)	7L50 (Buffalo Creek 526S - Jarrow 252S Tap)	2.5%	3.7%	2.6%	2.6%	4.9%	2.6%	0.7%	9.1%	9.1%	5.2%	2.6%	2.6%	--	4.8%
	7L749\749L\7LB749 (Edgerton 899S - Briker 880S - Lloydminster 716S)	7L50 (Buffalo Creek 526S - Jarrow 252S Tap)	2.4%	4.2%	2.5%	2.5%	4.4%	2.2%	6.3%	6.8%	6.8%	4.7%	2.5%	2.5%	--	4.3%
	7L77 (North Holden 395S - Vegreville 709S)	7L50 (Buffalo Creek 526S - Jarrow 252S Tap)	1.9%	2.6%	1.9%	1.9%	3.7%	1.9%	-1.3%	7.2%	7.2%	4.0%	1.9%	1.9%	--	3.7%
	899ST3A (Edgerton 899S Transformer T3A)	7L50 (Buffalo Creek 526S - Jarrow 252S Tap)	2.4%	4.1%	2.5%	2.5%	4.4%	2.2%	6.2%	6.7%	6.8%	4.6%	2.5%	2.5%	--	4.3%
	912L\9L912 (Red Deer 63S - Nevis 766S)	701L (North Holden 395S - Strome 223S)	6.9%	8.6%	6.5%	6.5%	11.4%	9.4%	9.6%	17.5%	17.6%	12.1%	6.4%	6.4%	--	11.3%
		7L50 (Buffalo Creek 526S - Jarrow 252S Tap)	4.5%	5.8%	4.3%	4.3%	7.5%	6.0%	3.5%	10.3%	10.4%	8.0%	4.2%	4.2%	--	7.5%
	966L\9L966 (Hansman Lake 650S - Pemukan 932S)	7L224 (Hansman Lake 650S - Monitor 774S)	4.2%	26.0%	5.9%	5.9%	-6.7%	-0.9%	-22.3%	-8.1%	-8.1%	-8.0%	5.6%	5.6%	--	-6.7%
	9L16 (Tinchebray 972S - Cordel 755S)	9L51 (Sedalia 363S - Pemukan 932S)	12.0%	44.3%	16.7%	16.7%	15.7%	-3.2%	-35.6%	-23.8%	-23.8%	-25.6%	16.9%	16.9%	--	15.7%
	9L20 (Nevis 766S - Cordel 755S)	7L50 (Buffalo Creek 526S - Jarrow 252S Tap)	3.1%	5.2%	3.6%	3.6%	7.0%	1.4%	2.8%	9.6%	9.6%	7.4%	3.6%	3.6%	--	6.9%
		766S901T (Nevis 766S Transformer 901T)	20.9%	2.0%	24.0%	24.0%	1.0%	62.7%	1.6%	4.0%	4.0%	0.9%	2.5%	2.6%	--	1.0%

Scenario and Case Name	Contingency (System Element Lost)	Details of Violation (Violation Observed On)	Generating Facility Name and Unit Number													
			Wintering Hills	Sharp Hills	Suncor Hand Hills	BlueEarth Hand Hills	Halkirk	Ghost Pine	Bull Creek DG	Battle River #3	Battle River #4	Battle River #5	Sheerness #1	Sheerness #2	Planned Irma Wind Power Project	Paintearth
2019 Summer Peak Post-Project Alternative 2 Case B	9L29 (Oakland 946S - Coyote Lake 963S)	7L159 (Ghost Pine 114S Tap - Heatburg 948S)	24.7%	1.1%	29.1%	29.1%	-0.2%	74.0%	0.1%	-0.3%	-0.3%	-0.4%	2.2%	2.2%	--	-0.2%
		7L16 (Nevis 766S - Heatburg 948S)	22.4%	1.0%	26.3%	26.3%	-0.1%	68.3%	0.1%	-0.2%	-0.2%	-0.4%	2.0%	2.0%	--	-0.1%
		7L85 (Wintering Hills 804S - Bullpound 803S)	63.9%	-0.7%	44.1%	44.1%	0.5%	23.9%	0.4%	1.4%	1.4%	0.9%	-2.7%	-2.7%	--	0.5%
	EATL (Newell 2075S - Heathfield 2029S)	701L (North Holden 395S - Strome 223S)	2.7%	3.9%	2.8%	2.8%	5.5%	3.0%	4.2%	12.0%	12.1%	5.9%	2.7%	2.7%	--	5.5%
		7L50 (Buffalo Creek 526S - Jarrow 252S Tap)	1.7%	2.7%	1.8%	1.8%	3.7%	1.9%	0.0%	6.8%	6.8%	4.0%	1.8%	1.8%	--	3.7%
	296ST1 or 296ST2 (Rosyth 286S Transformer T1 or T2)	7L129 (Buffalo Creek 526S - Bauer 918S Tap)	2.0%	2.9%	2.1%	2.1%	3.9%	2.1%	-0.5%	6.9%	6.9%	4.1%	2.1%	2.1%	47.5%	3.8%
	377ST1 (Hardisty 377S Transformer T1)	7L129 (Buffalo Creek 526S - Bauer 918S Tap)	2.0%	2.7%	2.1%	2.1%	3.9%	2.1%	-1.4%	7.0%	7.0%	4.2%	2.0%	2.0%	47.7%	3.9%
	395ST1 (North Holden 395S Transformer T1)	7L129 (Bauer 918S Tap - Vermilion 710S)	2.2%	3.0%	2.2%	2.2%	4.2%	2.3%	-0.8%	8.1%	8.1%	4.5%	2.2%	2.2%	43.6%	4.2%
		7L129 (Buffalo Creek 526S - Bauer 918S Tap)	2.3%	3.2%	2.4%	2.4%	4.5%	2.4%	-0.9%	8.5%	8.5%	4.7%	2.3%	2.3%	45.5%	4.4%
	51ST3 or 51ST4 (Wainwright 51S Transformer T3 or T4)	7L129 (Buffalo Creek 526S - Bauer 918S Tap)	2.1%	2.9%	2.1%	2.1%	3.9%	2.1%	-0.5%	7.0%	7.0%	4.1%	2.1%	2.1%	47.4%	3.9%
	650ST1 (Hansman Lake 650S Transformer T1)	7L129 (Buffalo Creek 526S - Bauer 918S Tap)	2.0%	2.9%	2.1%	2.1%	3.9%	2.1%	-1.0%	6.9%	6.9%	4.1%	2.1%	2.1%	47.5%	3.8%
	681L (Tucuman 478S - Hardisty 377S)	7L129 (Buffalo Creek 526S - Bauer 918S Tap)	2.0%	2.9%	2.1%	2.1%	3.9%	2.1%	-1.0%	6.8%	6.8%	4.2%	2.1%	2.1%	47.6%	3.9%
	701L (North Holden 395S - Strome 223S)	7L129 (Bauer 918S Tap - Vermilion 710S)	2.6%	3.6%	2.6%	2.6%	4.8%	2.6%	0.5%	8.9%	9.0%	5.1%	2.6%	2.6%	46.7%	4.8%
		7L129 (Buffalo Creek 526S - Bauer 918S Tap)	2.7%	3.8%	2.7%	2.7%	5.1%	2.7%	0.5%	9.4%	9.4%	5.4%	2.7%	2.7%	48.8%	5.0%
	749L\749AL (Metiskow 648S - Edgerton 899S)	7L129 (Bauer 918S Tap - Vermilion 710S)	2.4%	4.0%	2.5%	2.5%	4.2%	2.2%	-	6.4%	6.5%	4.5%	2.5%	2.5%	42.6%	4.2%
		7L129 (Buffalo Creek 526S - Bauer 918S Tap)	2.5%	4.2%	2.6%	2.6%	4.5%	2.4%	-	6.8%	6.8%	4.7%	2.6%	2.6%	44.6%	4.4%
	766S901T (Nevis 766S Transformer 901T)	701L (North Holden 395S - Strome 223S)	6.8%	8.5%	6.4%	6.4%	11.3%	8.6%	9.5%	17.3%	17.4%	11.9%	6.3%	6.3%	5.7%	11.2%
		7L129 (Bauer 918S Tap - Vermilion 710S)	4.3%	5.7%	4.2%	4.2%	7.4%	5.1%	3.3%	10.0%	10.0%	7.8%	4.1%	4.1%	49.6%	7.3%
		7L129 (Buffalo Creek 526S - Bauer 918S Tap)	4.6%	6.0%	4.4%	4.4%	7.8%	5.4%	3.4%	10.6%	10.6%	8.3%	4.4%	4.4%	52.0%	7.8%
		7L701 (Strome 223S - Heisler 764S Tap)	7.4%	9.3%	7.0%	7.0%	12.3%	9.5%	10.3%	18.9%	19.0%	13.1%	6.9%	6.9%	6.3%	12.2%
	769L\769AL (Hardisty 377S - Clipper 656S - Rosyth 286S)	7L129 (Buffalo Creek 526S - Bauer 918S Tap)	2.0%	2.9%	2.1%	2.1%	3.9%	2.1%	-0.5%	6.9%	6.9%	4.1%	2.1%	2.1%	47.5%	3.8%
	7L42 (Hill 751S - Lloydminster 716S)	7L129 (Bauer 918S Tap - Vermilion 710S)	2.5%	4.2%	2.6%	2.6%	4.4%	2.3%	6.1%	6.6%	6.6%	4.6%	2.6%	2.6%	42.1%	4.3%
		7L129 (Buffalo Creek 526S - Bauer 918S Tap)	2.6%	4.4%	2.7%	2.7%	4.6%	2.4%	6.4%	6.9%	7.0%	4.9%	2.7%	2.7%	43.8%	4.5%
	7L701\7LA701\701L (Battle River 757S - Heisler 764S - Strome 223S)	7L129 (Bauer 918S Tap - Vermilion 710S)	2.5%	3.6%	2.6%	2.6%	4.8%	2.6%	0.5%	8.8%	8.8%	5.1%	2.6%	2.6%	46.7%	4.7%
		7L129 (Buffalo Creek 526S - Bauer 918S Tap)	2.7%	3.8%	2.7%	2.7%	5.0%	2.7%	0.5%	9.3%	9.3%	5.3%	2.7%	2.7%	48.8%	5.0%
	7L749\749L\7LB749 (Edgerton 899S - Briker 880S - Lloydminster 716S)	7L129 (Bauer 918S Tap - Vermilion 710S)	2.4%	4.1%	2.5%	2.5%	4.3%	2.3%	6.0%	6.6%	6.6%	4.6%	2.5%	2.5%	42.5%	4.3%
		7L129 (Buffalo Creek 526S - Bauer 918S Tap)	2.5%	4.3%	2.7%	2.7%	4.5%	2.4%	6.4%	6.9%	6.9%	4.8%	2.7%	2.7%	44.4%	4.5%
	7L77 (North Holden 395S - Vegreville 709S)	7L129 (Bauer 918S Tap - Vermilion 710S)	1.9%	2.6%	1.9%	1.9%	3.7%	2.0%	-1.5%	7.0%	7.0%	3.9%	1.9%	1.9%	42.6%	3.6%
		7L129 (Buffalo Creek 526S - Bauer 918S Tap)	2.0%	2.7%	2.0%	2.0%	3.8%	2.1%	-1.6%	7.3%	7.4%	4.1%	2.0%	2.0%	44.4%	3.8%
	885L (Hansman Lake 650S - Metiskow 648S)	7L129 (Buffalo Creek 526S - Bauer 918S Tap)	2.1%	3.0%	2.1%	2.1%	3.8%	2.1%	-1.3%	6.9%	6.9%	4.1%	2.1%	2.1%	47.4%	3.8%
	899ST3A (Edgerton 899S Transformer T3A)	7L129 (Bauer 918S Tap - Vermilion 710S)	2.4%	4.1%	2.5%	2.5%	4.3%	2.3%	6.0%	6.5%	6.6%	4.5%	2.5%	2.5%	42.5%	4.2%
		7L129 (Buffalo Creek 526S - Bauer 918S Tap)	2.5%	4.3%	2.7%	2.7%	4.5%	2.4%	6.3%	6.9%	6.9%	4.8%	2.6%	2.6%	44.5%	4.5%
	912L\9L912 (Red Deer 63S - Nevis 766S)	701L (North Holden 395S - Strome 223S)	6.9%	8.5%	6.5%	6.5%	11.2%	9.3%	9.4%	17.3%	17.3%	11.9%	6.3%	6.3%	5.7%	11.1%
		7L129 (Bauer 918S Tap - Vermilion 710S)	4.5%	5.7%	4.2%	4.2%	7.3%	6.0%	3.2%	9.9%	10.0%	7.7%	4.1%	4.1%	49.5%	7.2%
		7L129 (Buffalo Creek 526S - Bauer 918S Tap)	4.8%	6.0%	4.5%	4.5%	7.7%	6.3%	3.4%	10.5%	10.5%	8.2%	4.4%	4.4%	52.0%	7.7%
		7L701 (Strome 223S - Heisler 764S Tap)	7.6%	9.3%	7.1%	7.1%	12.3%	10.2%	10.3%	18.9%	18.9%	13.0%	6.9%	6.9%	6.2%	12.2%
	954L (Hansman Lake 650S - Metiskow 648S)	7L129 (Buffalo Creek 526S - Bauer 918S Tap)	2.0%	2.9%	2.1%	2.1%	3.9%	2.1%	-1.1%	6.9%	6.9%	4.1%	2.1%	2.1%	47.4%	3.8%
	9L16 (Tinchebray 972S - Cordel 755S)	9L51 (Sedalia 363S - Pemukan 932S)	12.1%	44.2%	16.8%	16.8%	16.0%	-3.2%	-36.0%	-23.8%	-23.8%	-25.6%	17.0%	17.0%	-23.9%	15.9%
	9L20 (Nevis 766S - Cordel 755S)	766S901T (Nevis 766S Transformer 901T)	15.6%	7.6%	8.6%	8.6%	8.1%	55.8%	7.9%	9.6%	9.6%	8.3%	7.1%	7.1%	6.7%	8.1%
		7L129 (Bauer 918S Tap - Vermilion 710S)	3.1%	5.1%	3.5%	3.5%	6.7%	1.4%	2.5%	9.2%	9.3%	7.2%	3.5%	3.5%	48.7%	6.7%
		7L129 (Buffalo Creek 526S - Bauer 918S Tap)	3.2%	5.3%	3.7%	3.7%	7.1%	1.5%	2.6%	9.7%	9.8%	7.6%	3.7%	3.7%	51.0%	7.1%
	9L29 (Oakland 946S - Coyote Lake 963S)	766S901T (Nevis 766S Transformer 901T)	21.2%	2.0%	24.4%	24.4%	1.0%	63.0%	1.6%	4.0%	4.0%	0.9%	2.6%	2.6%	2.2%	1.0%
		7L159 (Ghost Pine 114S Tap - Heatburg 948S)	24.8%	1.1%	29.3%	29.3%	-0.2%	73.9%	0.1%	-0.3%	-0.3%	-0.4%	2.2%	2.2%	-0.3%	-0.2%
		7L16 (Nevis 766S - Heatburg 948S)	22.7%	1.0%	26.6%	26.5%	-0.1%	68.4%	0.1%	-0.2%	-0.2%	-0.4%	2.1%	2.1%	-0.2%	-0.1%
		7L85 (Wintering Hills 804S - Bullpound 803S)	63.6%	-0.7%	43.9%	43.8%	0.5%	23.9%	0.4%	1.5%	1.5%	0.9%	-2.7%	-2.7%	1.0%	0.5%
	9L46 (Lanfine 959S - Sedalia 363S)	7L129 (Buffalo Creek 526S - Bauer 918S Tap)	1.9%	4.2%	1.8%	1.8%	4.2%	2.1%	0.2%	7.3%	7.3%	4.5%	1.8%	1.8%	47.9%	4.1%
	9L933\933L (Ware Junction 132S - Anderson 801S)	7L129 (Buffalo Creek 526S - Bauer 918S Tap)	2.1%	3.0%	2.2%	2.2%	3.9%	2.1%	-0.4%	7.0%	7.0%	4.2%	2.2%	2.2%	47.7%	3.9%

Scenario and Case Name	Contingency (System Element Lost)	Details of Violation (Violation Observed On)	Generating Facility Name and Unit Number													
			Wintering Hills	Sharp Hills	Suncor Hand Hills	BlueEarth Hand Hills	Halkirk	Ghost Pine	Bull Creek DG	Battle River #3	Battle River #4	Battle River #5	Sheerness #1	Sheerness #2	Planned Irma Wind Power Project	Paintearth
	9L934\934L (Ware Junction 132S - Anderson 801S)	7L129 (Buffalo Creek 526S - Bauer 918S Tap)	2.2%	3.0%	2.2%	2.2%	4.0%	2.2%	-0.4%	7.0%	7.0%	4.2%	2.2%	2.2%	47.7%	3.9%
	9L950\950L (Ware Junction 132S - Anderson 801S)	7L129 (Buffalo Creek 526S - Bauer 918S Tap)	2.1%	3.0%	2.2%	2.2%	3.9%	2.1%	-0.4%	7.0%	7.0%	4.2%	2.2%	2.2%	47.7%	3.9%
	EATL (Newell 2075S - Heathfield 2029S)	701L (North Holden 395S - Strome 223S)	2.8%	3.9%	2.8%	2.8%	5.5%	3.0%	4.1%	11.9%	12.0%	5.8%	2.8%	2.8%	1.5%	5.4%
		7L129 (Bauer 918S Tap - Vermilion 710S)	1.8%	2.7%	1.8%	1.8%	3.6%	1.9%	-0.2%	6.5%	6.6%	3.9%	1.8%	1.8%	46.8%	3.6%
		7L129 (Buffalo Creek 526S - Bauer 918S Tap)	1.9%	2.8%	2.0%	2.0%	3.8%	2.1%	-0.2%	6.9%	6.9%	4.1%	1.9%	1.9%	49.0%	3.8%
2019 Winter Peak Post-Project Alternative 2 Case A	526ST1 or 526ST2 (Buffalo Creek 526S Transformer T1 or T2)	749L (Edgerton 899S - Killarney Lake 267S Tap)	1.7%	4.1%	1.9%	1.9%	2.5%	1.3%	18.2%	1.9%	1.8%	2.5%	1.9%	1.9%	-	2.4%
	749L\749AL (Metiskow 648S - Edgerton 899S)	7L50 (Buffalo Creek 526S - Jarrow 252S Tap)	2.1%	3.8%	2.3%	2.3%	3.9%	2.0%	-	6.1%	5.9%	4.0%	2.2%	2.2%	--	3.8%
	766S901T (Nevis 766S Transformer 901T)	701L (North Holden 395S - Strome 223S)	6.2%	7.8%	5.8%	5.8%	10.3%	8.1%	8.8%	16.0%	15.8%	10.8%	5.6%	5.6%	--	10.2%
		7L50 (Buffalo Creek 526S - Jarrow 252S Tap)	4.0%	5.4%	3.9%	3.9%	6.9%	4.8%	3.3%	9.5%	9.3%	7.2%	3.8%	3.8%	--	6.8%
		7L701 (Strome 223S - Heisler 764S Tap)	6.9%	8.7%	6.5%	6.5%	11.5%	9.1%	9.7%	17.9%	17.6%	12.1%	6.3%	6.3%	--	11.4%
	7L129\7LA129 (Buffalo Creek 526S - Vermilion 710S - Bauer 918S)	749L (Edgerton 899S - Killarney Lake 267S Tap)	1.7%	4.2%	1.9%	1.9%	2.5%	1.3%	18.2%	1.9%	1.9%	2.5%	1.9%	1.9%	-	2.5%
	7L50 (Battle River 757S - Jarrow 252S - Buffalo Creek 526S)	749L (Edgerton 899S - Killarney Lake 267S Tap)	1.6%	4.1%	1.9%	1.9%	2.4%	1.2%	18.5%	1.7%	1.7%	2.4%	1.9%	1.9%	-	2.4%
		7L749 (Edgerton 899S - 7L749 Tap)	1.5%	3.9%	1.7%	1.7%	2.2%	1.1%	17.6%	1.6%	1.5%	2.2%	1.7%	1.7%	-	2.2%
	7L749\749L\7LB749 (Edgerton 899S - Briker 880S - Lloydminster 716S)	7L50 (Buffalo Creek 526S - Jarrow 252S Tap)	2.2%	4.0%	2.4%	2.4%	4.0%	2.1%	6.2%	6.3%	6.2%	4.2%	2.3%	2.3%	--	4.0%
	899ST3A (Edgerton 899S Transformer T3A)	7L50 (Buffalo Creek 526S - Jarrow 252S Tap)	2.2%	3.9%	2.3%	2.3%	4.0%	2.1%	5.7%	6.2%	6.1%	4.2%	2.3%	2.3%	--	4.0%
	912L\9L912 (Red Deer 63S - Nevis 766S)	701L (North Holden 395S - Strome 223S)	6.3%	7.8%	5.8%	5.8%	10.2%	8.5%	8.7%	16.0%	15.8%	10.7%	5.7%	5.7%	--	10.2%
		7L50 (Buffalo Creek 526S - Jarrow 252S Tap)	4.1%	5.4%	3.9%	3.9%	6.8%	5.5%	3.2%	9.4%	9.3%	7.1%	3.8%	3.8%	--	6.7%
		7L701 (Strome 223S - Heisler 764S Tap)	7.1%	8.7%	6.5%	6.5%	11.5%	9.6%	9.7%	17.8%	17.6%	12.1%	6.3%	6.3%	--	11.4%
	9L20 (Nevis 766S - Cordel 755S)	766S901T (Nevis 766S Transformer 901T)	15.8%	7.3%	8.5%	8.5%	7.8%	58.6%	7.7%	9.2%	9.2%	7.9%	6.9%	6.9%	--	7.7%
	395ST1 (North Holden 395S Transformer T1)	7L129 (Bauer 918S Tap - Vermilion 710S)	2.0%	2.8%	2.0%	2.0%	3.9%	2.1%	-0.9%	7.4%	7.3%	4.1%	2.0%	2.0%	43.8%	3.8%
		7L129 (Buffalo Creek 526S - Bauer 918S Tap)	2.2%	3.0%	2.2%	2.2%	4.1%	2.3%	-0.9%	7.9%	7.8%	4.4%	2.2%	2.2%	46.1%	4.1%
	526ST1 or 526ST2 (Buffalo Creek 526S Transformer T1 or T2)	749L (Edgerton 899S - Killarney Lake 267S Tap)	1.7%	4.1%	1.9%	1.9%	2.5%	1.3%	18.2%	1.8%	1.8%	2.5%	1.9%	1.9%	-	2.4%
	701L (North Holden 395S - Strome 223S)	7L129 (Bauer 918S Tap - Vermilion 710S)	2.4%	3.4%	2.4%	2.4%	4.4%	2.4%	0.4%	8.2%	8.1%	4.6%	2.3%	2.3%	46.9%	4.4%
		7L129 (Buffalo Creek 526S - Bauer 918S Tap)	2.5%	3.6%	2.5%	2.5%	4.7%	2.6%	0.4%	8.7%	8.6%	5.0%	2.5%	2.5%	49.3%	4.7%
	749L\749AL (Metiskow 648S - Edgerton 899S)	7L129 (Bauer 918S Tap - Vermilion 710S)	2.1%	3.7%	2.2%	2.2%	3.8%	2.0%	-	5.8%	5.8%	4.0%	2.2%	2.2%	42.6%	3.8%
		7L129 (Buffalo Creek 526S - Bauer 918S Tap)	2.3%	4.0%	2.4%	2.4%	4.1%	2.2%	-	6.3%	6.2%	4.3%	2.4%	2.4%	45.0%	4.0%
	766S901T (Nevis 766S Transformer 901T)	7L129 (Bauer 918S Tap - Vermilion 710S)	3.9%	5.2%	3.7%	3.7%	6.6%	4.7%	3.0%	9.0%	8.9%	6.9%	3.7%	3.7%	49.6%	6.6%
		7L129 (Buffalo Creek 526S - Bauer 918S Tap)	4.2%	5.6%	4.0%	4.0%	7.1%	5.0%	3.2%	9.7%	9.6%	7.5%	4.0%	3.9%	52.6%	7.1%
	7L129\7LA129 (Buffalo Creek 526S - Vermilion 710S - Bauer 918S)	749L (Edgerton 899S - Killarney Lake 267S Tap)	1.7%	4.2%	1.9%	1.9%	2.5%	1.3%	18.2%	1.8%	1.8%	2.5%	1.9%	1.9%	2.4%	2.4%
	7L42 (Hill 751S - Lloydminster 716S)	7L129 (Buffalo Creek 526S - Bauer 918S Tap)	2.4%	4.2%	2.5%	2.5%	4.3%	2.3%	6.0%	6.5%	6.4%	4.4%	2.5%	2.5%	44.2%	4.2%
2019 Winter Peak Post-Project Alternative 2 Case B	7L701\7LA701\701L (Battle River 757S - Heisler 764S - Strome 223S)	7L129 (Bauer 918S Tap - Vermilion 710S)	2.3%	3.4%	2.3%	2.3%	4.4%	2.4%	0.4%	8.0%	7.9%	4.6%	2.3%	2.3%	46.9%	4.3%
		7L129 (Buffalo Creek 526S - Bauer 918S Tap)	2.5%	3.6%	2.5%	2.5%	4.7%	2.5%	0.4%	8.6%	8.5%	4.9%	2.5%	2.5%	49.4%	4.6%
	7L749\749L\7LB749 (Edgerton 899S - Briker 880S - Lloydminster 716S)	7L129 (Bauer 918S Tap - Vermilion 710S)	2.2%	3.9%	2.3%	2.3%	3.9%	2.1%	5.8%	6.0%	5.9%	4.1%	2.3%	2.3%	42.5%	3.9%
		7L129 (Buffalo Creek 526S - Bauer 918S Tap)	2.4%	4.1%	2.5%	2.5%	4.2%	2.2%	6.1%	6.4%	6.3%	4.4%	2.5%	2.5%	44.8%	4.1%
	7L77 (North Holden 395S - Vegreville 709S)	7L129 (Buffalo Creek 526S - Bauer 918S Tap)	1.8%	2.5%	1.9%	1.8%	3.6%	1.9%	-1.7%	6.8%	6.7%	3.8%	1.8%	1.8%	44.9%	3.5%
	899ST3A (Edgerton 899S Transformer T3A)	7L129 (Bauer 918S Tap - Vermilion 710S)	2.2%	3.8%	2.3%	2.3%	3.9%	2.1%	5.5%	5.9%	5.9%	4.1%	2.3%	2.3%	42.6%	3.8%
		7L129 (Buffalo Creek 526S - Bauer 918S Tap)	2.3%	4.1%	2.5%	2.5%	4.2%	2.2%	5.8%	6.3%	6.3%	4.3%	2.4%	2.4%	44.9%	4.1%
	912L\9L912 (Red Deer 63S - Nevis 766S)	7L129 (Bauer 918S Tap - Vermilion 710S)	4.1%	5.2%	3.8%	3.8%	6.6%	5.4%	2.9%	9.0%	8.9%	6.9%	3.7%	3.7%	49.5%	6.5%
		7L129 (Buffalo Creek 526S - Bauer 918S Tap)	4.4%	5.5%	4.1%	4.1%	7.1%	5.8%	3.1%	9.6%	9.5%	7.4%	4.0%	4.0%	52.5%	7.0%
	9L20 (Nevis 766S - Cordel 755S)	766S901T (Nevis 766S Transformer 901T)	15.7%	7.2%	8.4%	8.4%	7.6%	58.5%	7.5%	9.0%	8.9%	7.7%	6.8%	6.8%	6.3%	7.5%
		7L129 (Bauer 918S Tap - Vermilion 710S)	2.8%	4.7%	3.1%	3.1%	6.1%	1.2%	2.3%	8.4%	8.4%	6.4%	3.2%	3.2%	48.8%	6.1%
		7L129 (Buffalo Creek 526S - Bauer 918S Tap)	2.9%	5.0%	3.4%	3.4%	6.6%	1.3%	2.4%	9.0%	9.0%	6.9%	3.4%	3.4%	51.6%	6.5%
	9L29 (Oakland 946S - Coyote Lake 963S)	766S901T (Nevis 766S Transformer 901T)	23.2%	2.0%	26.7%	26.7%	1.0%	67.2%	1.6%	4.1%	4.0%	0.8%	2.6%	2.6%	2.1%	1.0%
		7L129 (Bauer 918S Tap - Vermilion 710S)	1.7%	2.6%	1.7%	1.7%	3.4%	1.8%	-0.3%	6.1%	6.0%	3.6%	1.7%	1.7%	46.7%	3.3%

Scenario and Case Name	Contingency (System Element Lost)	Details of Violation (Violation Observed On)	Generating Facility Name and Unit Number													
			Wintering Hills	Sharp Hills	Suncor Hand Hills	BlueEarth Hand Hills	Halkirk	Ghost Pine	Bull Creek DG	Battle River #3	Battle River #4	Battle River #5	Sheerness #1	Sheerness #2	Planned Irma Wind Power Project	Paintearth
	EATL (Newell 2075S - Heathfield 2029S)	7L129 (Buffalo Creek 526S - Bauer 918S Tap)	1.8%	2.7%	1.9%	1.9%	3.6%	1.9%	-0.3%	6.5%	6.4%	3.8%	1.8%	1.8%	49.2%	3.6%
		912L\9L912 (Red Deer 63S - Nevis 766S)	23.3%	27.6%	20.6%	20.6%	37.1%	42.8%	34.4%	35.1%	35.1%	39.2%	19.8%	19.8%	26.8%	36.9%