November 9, 2011

Attention: Don Popowich
Director of Facilities
Alberta Utilities Commission
Fifth Avenue Place
4th Floor, 425 - 1 Street SW
Calgary, AB T2P 3L8

Dear Mr. Popowich:

Re: Application to the Alberta Utilities Commission (AUC) for approval of the Northwest of Fort McMurray 240kV Transmission System Development Needs Identification Document

Please find enclosed the Alberta Electric System Operator (AESO) application for approval of the Northwest of Fort McMurray 240kV Transmission System Development Needs Identification Document (NID). The AESO respectfully requests that the Northwest of Fort McMurray 240kV Transmission System Development NID be considered for approval and that it not be combined with any facilities proposals to prepare to meet the needs identified.

Please do not hesitate to contact any of the individuals below if you have questions or concerns regarding the foregoing:

David Michaud
Manager, Regulatory Services
david.michaud@aeso.ca
403-539-2471

Nicole Weigel
NID Filings Coordinator
need.applications@aeso.ca
403-539-2874

Yours truly,

David Michaud

David Michaud
Manager, Regulatory Services

Alberta Utilities Commission

In the Matter of the Need for the Northwest of Fort McMurray 240 kV Transmission System Development

And in the matter of the *Electric Utilities Act*, S.A. 2003, c. E-5.1, the *Alberta Utilities Commission Act*, S.A. 2007, c. A-37.2, the *Hydro and Electric Energy Act*, R.S.A. 2000, c. H-16, the *Transmission Regulation*, AR 86/2007 and Alberta Utilities Commission Rule 007, all as amended

Application of the Alberta Electric System Operator for approval of the Needs Identification Document for Northwest of Fort McMurray 240kV Transmission System Development

PART A - APPLICATION

1 Introduction

1.1 Application – Pursuant to section 34 of the *Electric Utilities Act* (Act), and in accordance with the further legislative provisions set out in the recitals, the Alberta Electric System Operator (AESO) applies to the Alberta Utilities Commission (Commission) for approval of the *Northwest of Fort McMurray 240kV Transmission System Development* Needs Identification Document ("Application"), as more specifically described herein.

1.2 Application Overview – This Application describes the transmission constraints and conditions that give rise to the need for transmission system development in the area northwest of the city of Fort McMurray. It also indicates the manner in which the AESO proposes to alleviate these constraints and conditions.

Specifically, the AESO is forecasting significant load and generation development in the area, related to oilsands production. The AESO is processing several requests for transmission system access in the area, with in-service requirements as early as 2013. There are currently no existing transmission facilities in the immediate vicinity of requested connections and the AESO has determined that expansion of the transmission system is required as soon as possible to provide transmission system access and serve forecasted electrical demand. Consistent with its duties to develop plans for the transmission system and to provide for the timely implementation of required transmission system expansions and enhancements, the AESO has identified its preferred transmission system development (the Northwest Fort McMurray Plan) to meet the forecasted need, and submits this Application to the Commission for approval.[1]

[1] For information, some of the legislative provisions relating to the AESO's planning duties and duty to provide system access service are referenced in notes i and ii of Part C of this Application.

This Application is directed solely to the need for expansion or enhancement of the capability of the transmission system as more fully described in the Act and the *Transmission Regulation*, and as it relates to the Northwest Fort McMurray Plan as described herein. This Application does not seek approval of those aspects of transmission development that are managed and executed separately from the needs approval process. Other aspects of the AESO's responsibilities regarding transmission development are managed under the appropriate processes, including the AESO Rules, Alberta Reliability Standards and AESO Tariff, which are also subject to specific regulatory approvals. While the Application or its supporting appendices may refer to such other processes or information, the inclusion of such information is for context and reference only.

1.3 AESO Directions – In the process of identifying the need and preparing this Application, the AESO issued various directions to the legal owner of transmission facilities in the area, ATCO Electric Ltd., including, pursuant to section 39 of the Act and section 14 of the *Transmission Regulation*, direction to assist the AESO in preparing its needs identification document.[2]

[2] The directions are described in more detail in the following sections of this Application and in Part C, note vi.

2 Need for Transmission System Development

2.1 AESO Responsibility to Plan the Transmission System and Provide System Access Service – Pursuant to its responsibilities under section 33 of the Act and section 8 of the *Transmission Regulation*, the AESO has forecast load growth for the area northwest of the city of Fort McMurray, and has made assumptions regarding the timing and location of future generation sources to supply load. In addition, pursuant to its responsibilities under section 29 of the Act, the AESO must provide system access service on the transmission system in a manner that gives all market participants a reasonable opportunity to exchange electric energy and ancillary services. The AESO is currently processing several requests for transmission system access in the area beginning as early as 2013.[3]

2.2 AESO Forecast of Need – New oilsands development activity is forecast to create substantial electricity demand in the area northwest of the city of Fort McMurray beginning as early as 2013, as new oilsands production facilities begin commercial operation.[4] The area addressed by this application is part of AESO Planning area 25. This application focuses on the area west of existing lines 9L57 and 9L08 where there are currently no transmission facilities to serve developing load, including several new connections requested. Following connection of several oilsands developments in the near term, oilsands related load growth is forecast to proceed into the foreseeable future as new operations ramp up production, and as lease areas are progressively developed. Figure 1 illustrates the study or development area that is the subject of the AESO's application.

[3] This application addresses the system expansions necessary to accommodate future market participant connections and long term area load growth. Specific connections in the area will be applied for separate from this application.

[4] The need for transmission system development in the area northwest of the city of Fort McMurray has been previously identified in the AESO's draft 2011 *Long-term Transmission System Plan*. The need for development is found in section 4.5.2 and is referred to as the Livock to Joslyn 240kV line.

Figure 1 Assumed 2020 Transmission System Configuration with Northwest of Fort McMurray Study or Development Area.[5]

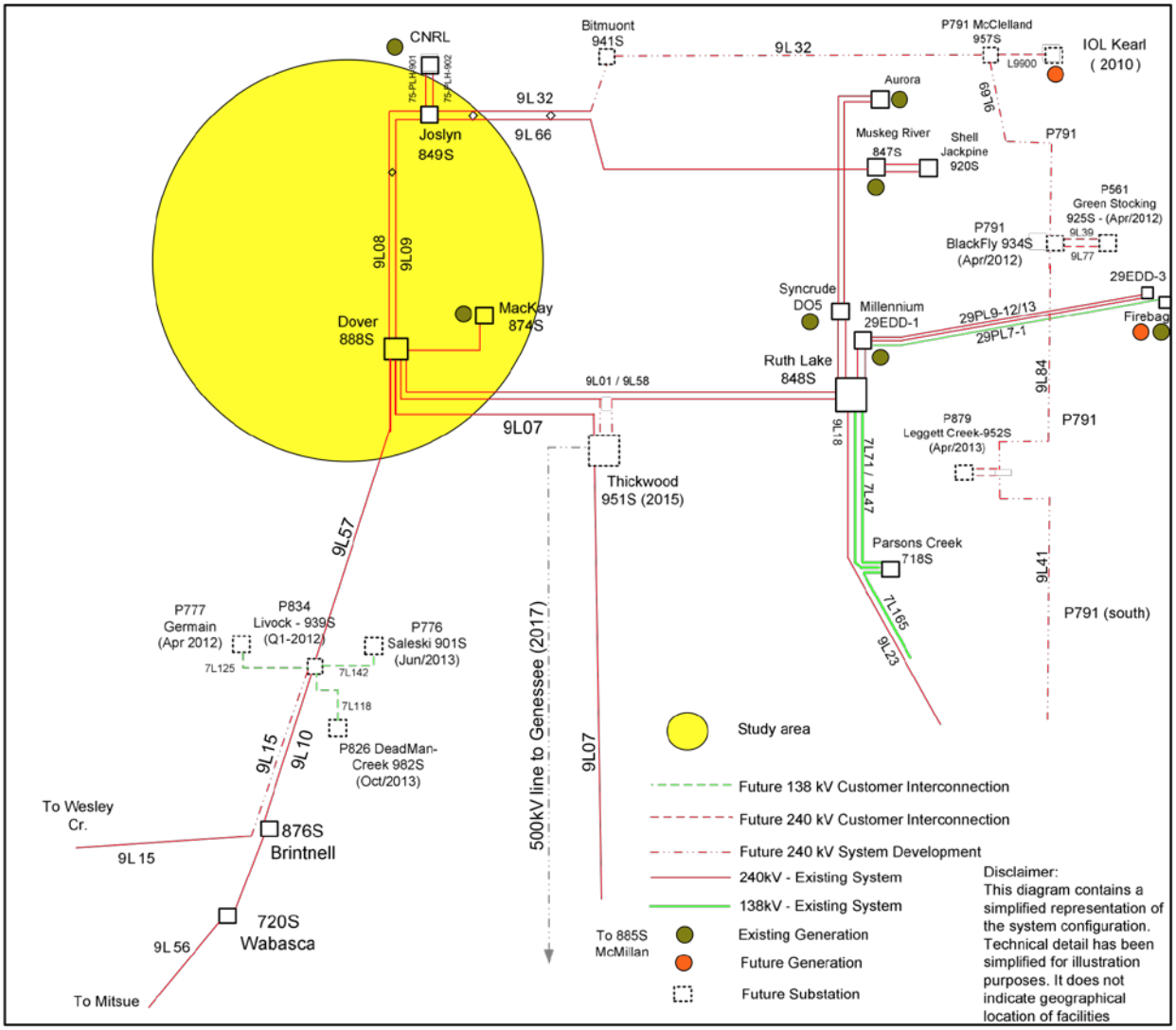

Oilsands extraction operations and related industry are load intensive and consequently, area load is forecast to grow in large steps as new extraction operations

[5] This highlighted study area is provided for illustrative purposes only. It is not intended to represent a geographical area, nor is it intended to restrict the TFO in its siting and routing activities, to be completed as part of its facility proposal.

are commissioned and begin commercial operations. Load is expected to increase rapidly as new connections are added to the system in the next several years. AESO forecasts indicate that load in the area will grow to between 370 and 450 MW by 2020/21. The later forecasted number is an accelerated load forecast sensitivity which considers that the timing and magnitude of developments is uncertain. The AESO's long range load assessment indicates loads of between 580 MW and 1060 MW could develop in the area in the 2025 timeframe, and beyond.

The forecasted load mentioned above is anticipated to initially develop in both the northern and southern portions of the area. The forecasted load in the northern portion of the area is in the range of 260 to 320 MW, and forecasted load in the southern portion is in the range of 100-130 MW, by 2020/21. The later forecasted number in both cases is an accelerated load forecast sensitivity which considers that the timing and magnitude of developments is uncertain. Figure 2 illustrates the forecasted load distribution in the area to 2020/21.

Figure 2 Assumed 2020 Transmission System Configuration with Forecasted loading in the Area Northwest of the City of Fort McMurray to 2020. [6]

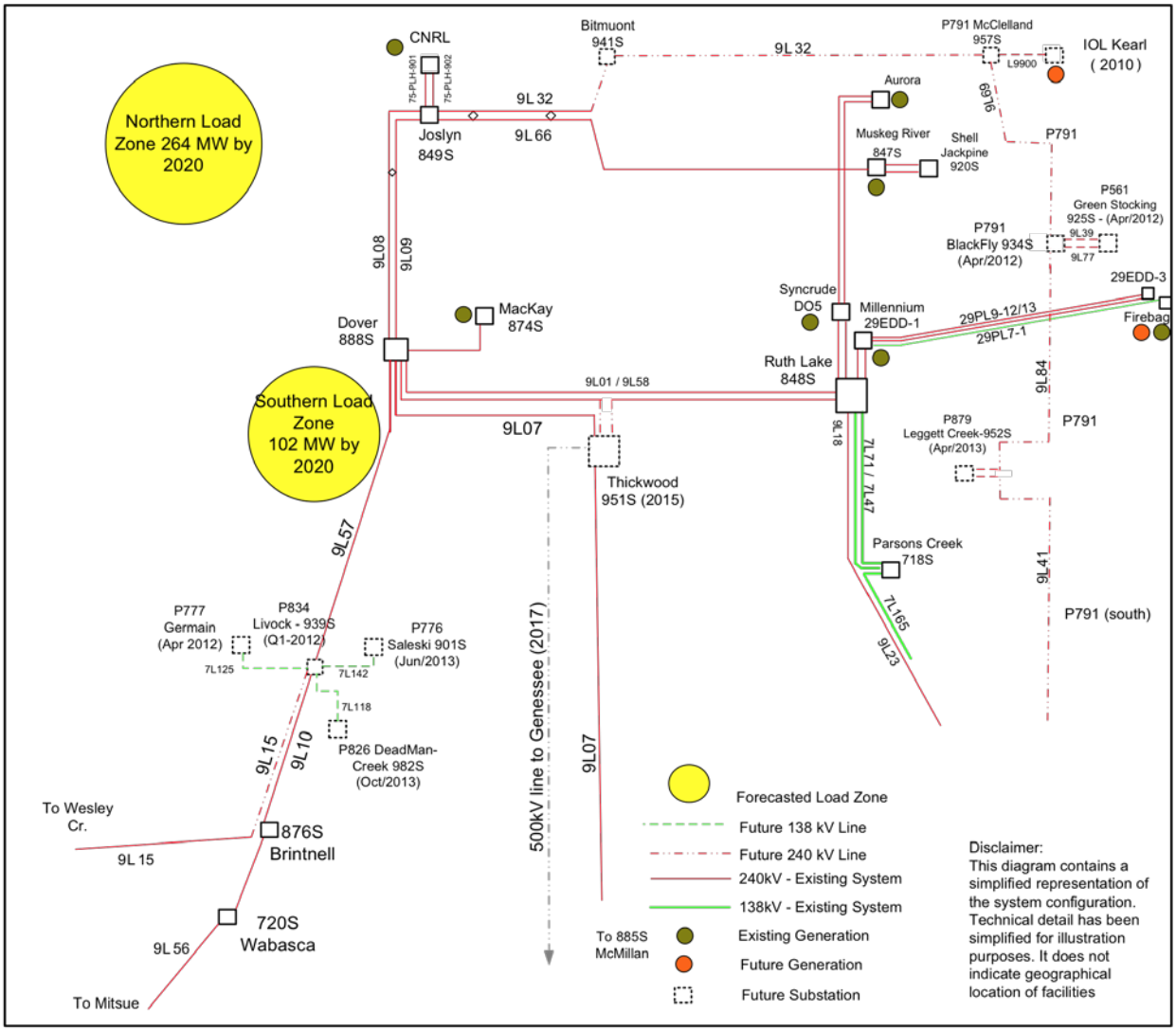

There are no transmission facilities in the direct vicinity of the forecast loads and the AESO has studied the existing transmission system nearest to the forecasted loading under system normal, and contingency conditions to determine the capability of the existing system to supply the load growth forecasted in the northern and southern

[6] The forecasted load zones are provided for illustrative purposes only. It is not intended to represent a geographical area, nor is it intended to restrict the TFO in its siting and routing activities, to be completed as part of its facility proposal.

portions of the of the area.[7] Studies indicate that the existing system from which system expansions into the area would be served, is capable of supporting expansion and serving forecasted load.

In planning of the required expansion, the AESO considers the specific needs and timing of requested connections in the area. The AESO has determined that transmission system development in the area northwest of the city of Fort McMurray is needed as early as 2013 to provide transmission access for customer connections. Further, the AESO's need assessment studies indicate that transmission development into the northwest of Fort McMurray area must be designed and implemented in a timely manner such that voltage stability issues do not arise as load in the area is connected. In consideration of the potential for significant oilsands development for the area, the long term needs of the area dictate that transmission development in the short term offers flexibility for expansion as required. Transmission development plans also consider the requirement for reliability of service.

Commensurate with the type of load growth in the area, several gas-fired co-generation facilities are now planned to provide electricity and process steam to industrial operations. Generation also tends to be added in large increments. The AESO's forecast is for 255 MW of generation to develop within the area by 2020/21 and it is assumed that this generation would be added to support behind-the-fence load.

[7] Contingency is defined in AESO Transmission Reliability Criteria as "an event occurring on the Alberta Transmission System resulting in the loss of a system element". AESO Transmission Reliability Criteria is referenced in note iii of Part C of this Application.

3 System Developments

3.1 Preferred System Development – The AESO's preferred development plan (Northwest Fort McMurray Plan) establishes a 240kV transmission loop through a significant part of the planning area 25 that does not currently contain transmission infrastructure. The Northwest Fort McMurray Plan will establish a network suited to further expansion and reinforcement as oilsands and related development expand into the future.

The Northwest Fort McMurray Plan considers that loads initially developing within the area are forecast to be concentrated in both the northern or southern portions of the Northwest Area. Further, the Northwest Fort McMurray Plan considers that connection of customers is required as early as 2013. Therefore, the Northwest Fort McMurray Plan includes development of two 240 kV switching substations, located appropriately, and referenced here as NW FMM North and NW FMM South, from which customer connections can be provided in a timely manner. The NW FMM North switching substation is initially forecast to serve the northern portion of the area, and will be connected to the existing system via a new 240 kV double circuit transmission line connected to existing line 9L08. The NW FMM South switching substation is the required termination point for the south leg of the 240 kV loop and will be situated on existing line 9L57, south of existing Dover 888S substation. It will also be used to serve loads in the southern portion of the area.

Due to the size and location of this development, multiple construction seasons are required. Those components of the Northwest Fort McMurray Plan that are required to facilitate connection of market participants to the system, namely the two switching stations and the northern 240kV double circuit line segment, will be developed first in the construction sequence, followed by the closing of the loop, no later than 2015.

Figure 3 identifies the existing transmission system and the proposed Northwest of Fort McMurray Transmission Development Plan. It involves implementation of the following transmission developments: [8, 9]

By Q3 2013[10]

- Construct a new 240 kV switching substation referred to as NW FMM South, near the existing 9L57 and south of existing Dover 888S. Open existing 9L57 and terminate at the new NW FMM South substation with an in/out configuration, each line being rated at approximately 750/970 MVA summer/winter.

- Construct a new 240 kV switching substation referred to as NW FMM North located west of existing line 9L08. Open the existing Joslyn – Dover 240 kV 9L08 and construct approximately 50 km of new 240 kV transmission line in a double-circuit configuration, with approximate summer/winter rating of 750/970 MVA, from the existing 9L08 to the new NW FMM North.

By Q2 2015

- Construct approximately 80 km 240 kV double circuit transmission line with one side strung, with approximate summer/winter rating of

[8] Equipment ratings are approximated to the accuracy level required by the AESO for transmission planning purposes. Actual ratings of constructed facilities may vary. The AESO's functional specification will identify the components of the preferred development in greater detail, ensuring that the TFO applies for approval of facilities that are functionally consistent with the approved need for transmission development. Also, line numbering and substation names provided here are for ease of reference and are subject to change as engineering and design progresses.

[9] Load projections and market participant commitments currently support the need for the Northwest 240 kV Transmission Development as planned. However, in respect of uncertainty regarding timing of load development to be served, the AESO may direct the TFO to file multiple Facility Proposals, with varying in-service-dates, to allow for staged development if area load growth does not materialize as forecast.

[10] AESO studies assume Q3 2013 is the required in-service to meet market participant requests for system connection. TFO cost estimates and schedules assume Q2 2014 in-service based on current TFO scheduling assumptions. Actual in-service date will depend on market participant commitments, construction scheduling, approvals, and other factors.

750/970 MVA, between the new NW FMM South substation and the new NW FMM North substation.

Figure 3 Assumed 2020 System Configuration with Northwest of Fort McMurray Transmission Development Plan[11]

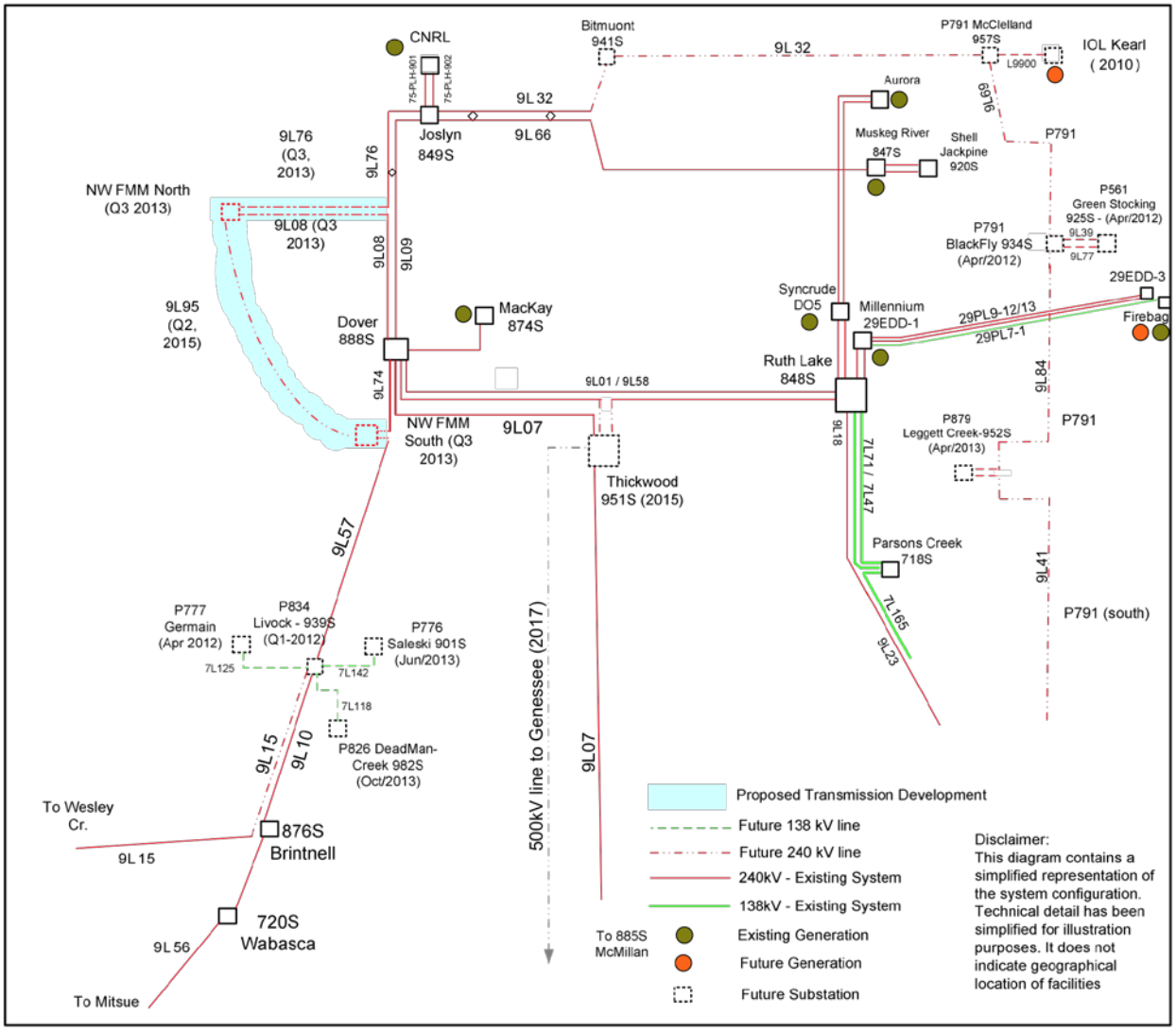

3.2 Proposed System Development Costs – The TFOs have estimated the capital cost of the Northwest Fort McMurray Plan to be in the order of $180 Million (+/-30%,

[11] This simplified single-line diagram of the Northwest Fort McMurray Plan is provided for illustrative purposes only. It is not intended to represent a geographical area, nor is it intended to restrict the TFO in its siting and routing activities, to be completed as part of its facility proposal.

$2014) in 2014, and $190 Million (+/-30%, $2015) in 2015.[12] For the purposes of this application, the AESO's cost estimates have been prepared assuming the complete development is designated as a system cost. However, the AESO will consider this in detail at the time it applies the AESO tariff to individual connections to determine whether a portion of 240 kV switching station costs are to be attributed to individual market participants.

3.3 Transmission Development Alternatives The AESO's existing system assessment initially assumed the northern and southern load zones would be served separately using radial connections to the existing system. System studies produced voltage violations in the vicinity of the NW FMM South substation in 2015 under Category B contingencies and therefore, it was determined that only a looped system would serve the long term transmission needs of the area and avoid voltage violations.

3.4 AESO System Study Conclusions – Detailed studies were performed on the proposed Northwest Fort McMurray Plan for near-term (2013, 2014 and 2015) and long-term (2020) to ensure compliance with the Reliability Criteria and the Alberta Reliability Standards. Transient stability analysis, power flow studies, voltage stability analysis, and short-circuit studies were conducted for system normal condition (Category A), single contingencies (Category B) and selected Category C contingencies.

The study results indicate that the proposed Northwest Fort McMurray Plan will accommodate forecasted load growth and facilitate the reliable supply to requested connections in the area northwest of the city of Fort McMurray in a timely manner, and support long term development within an area containing significant oil sands resources. The AESO Reliability Criteria and the Alberta Reliability Standards will be met both prior to completion of the Northwest Fort McMurray Plan as loads are

[12] TFO cost estimates have been prepared assuming the developments identified as needed for Q3 2013 are completed by Q2 2014.

connected as early as 2013 in the area, and following completion of the Plan in 2015.[13] The Plan has been designed to offer the flexibility of expansion, including the ability to string the second side of the 240 kV segment between NW FMM North and NW FMM south, as load in the area grows over the long term.[14]

3.5 Participant Involvement Program – The AESO conducted a participant involvement program (PIP), in accordance with NID13 and Appendix A of Commission Rule 007. The AESO utilized various methods to notify stakeholders of the need for transmission development in the AESO's study area. The AESO has received feedback and comments from stakeholders verbally during the open house, and in the form of participant surveys. The AESO has responded to comments and questions received during the open house, and has provided answers within its open house summary report, made available to those that requested it. The AESO knows of no outstanding concerns regarding the need for the Northwest of Fort McMurray 240kV transmission development.

3.6 Environmental and Socio-Economic Overview – The AESO directed the TFO to conduct an assessment of environmental and social factors, in accordance with AUC Rule 007, Section 6.1, NID12. Having regard for the fact that specific routing and siting aspects are not addressed as part of the AESO's needs identification application, the assessment uses a qualitative approach to assessing the potential land impacts of transmission development in the area Northwest of the city of Fort McMurray. The assessment included only the AESO's preferred transmission development and did not consider variations or alternatives to the development described herein. Following

[13] OPP 505 and 702 both apply in the Fort McMurray area and any developments, including the Northwest Fort McMurray Plan, will be subject to these Operating Policies and Procedures as long as they remain in effect. Any further discussion of these operational matters are beyond the scope of this application.

[14] There are a number of factors that will drive the need to string the second side of the 240 kV line, including load growth and the number of customers connecting in the area. The AESO will initiate studies to identify the timing for the stringing of the second side of the 240 kV line as load develops and need materializes. Such an assessment is beyond the scope of this application.

review of the available data, the application of suitable indicators and assessment of the development and study area, it was determined that while the potential for impacts exists, no factors were identified that precluded the development as planned. The assessment notes no analysis of specific routes or sites was undertaken and therefore, the AESO has not indicated a preference for siting or routing of the proposed development to the TFO based on this assessment. The AESO understands that impacts associated with specific routes, and substation locations will be considered in the development of TFO facility proposal(s).

3.7 Other Transmission Developments Planned in the Area Northwest of the City of Fort McMurray – As there are no existing transmission facilities in the area, the AESO has not previously filed any related applications in the area. However, the AESO is currently processing several market participant connection requests for the area requiring service as early as 2013. Individual needs identification documents for these connections will be filed separate from this Application.

The transmission system studies undertaken in preparing the Northwest Fort McMurray Plan consider the long-term load forecasts associated with planned connections in the area Northwest of the city of Fort McMurray. Individual needs identification documents filed separately for each connection will assess the specific system impacts of each, including the viability of connecting to the system prior to completion of the Northwest of Fort McMurray Transmission Development, as required.

The studies performed by the AESO are consistent with the AESO *draft 2011 Long-term Transmission Plan*, and assumed that a number of bulk system reinforcements in planning area 25, including the development of Thickwood 240kV system substation and associated reactive power reinforcements, the 500kV line connecting Thickwood and Genesee, additional VAR compensation in the Fort McMurray area, and development of the 240 kV loop north of the city of Fort McMurray, and 9L15 line re-

termination.[15] Absence of any of these bulk transmission reinforcements may change the performance of the transmission network in the Fort McMurray area, from that which has been modeled.

There are other developments planned in the Fort McMurray area which, although not directly related to the Northwest Fort McMurray Plan, have been, or will be engineered to be consistent with the proposed development as described herein. Needs identification documents to be prepared and submitted following this filing, will assume the proposed Northwest Fort McMurray Plan will be in-service for the date specified, unless new information indicates otherwise. Furthermore, needs identification documents that will be filed for forthcoming transmission developments will continue to identify specific system development dependencies where appropriate and practical, to ensure that the integrated nature of these developments is represented.

3.8 Prioritization of Northwest Fort McMurray 240kV Transmission Development Components and Mitigation of Risk of In-Service Date Delays – The absence of a reliable transmission network will impede industrial development in the area northwest of Fort McMurray. Oilsands developments are expecting connection to the Alberta Interconnected Electric System to meet their commercial requirements. Delayed approval of this application could delay filing of the associated facility proposals that will seek approval to construct and operate the transmission system outlined in the Northwest Fort McMurray Plan and could delay implementation. Delays may cause transmission access service to be limited in the Northwest Fort McMurray area until the system developments are energized, preventing end-users from reaching full commercial operation according to their required schedules.[16] Consequently, un-

[15] Fort McMurray Area Reactive Power NID was approved by the AUC July 28, 2011 (U2011-243). North Fort McMurray 240 kV Transmission System Development was approved by the AUC June 24, 2011 (U2011-216). 9L15 Line re-termination is included in AESO *draft 2011 Long-term Transmission Plan* (Table 4.4.4-1, Page 95). Thickwood substation and associated 500 kV transmission line is a CTI designated transmission development.

[16] It may be necessary for the AESO to develop or modify existing operational measures that will limit or control the supply of electricity until the completion and energization of the entire Northwest of Fort

constrained connection of new load and generation facilities in the area northwest of the city of Fort McMurray depends on the timely energization of the proposed Northwest of Fort McMurray 240kV transmission development.

To accommodate planned connections in the area, and to mitigate the risk of connection delay, priority will be given to construction of those components of the Northwest of Fort McMurray Plan that are required to facilitate connections. To meet the required development schedule, the TFO may file facility proposals for certain portions of the Northwest of Fort McMurray Plan ahead of others.

To mitigate schedule risk, the AESO may issue direction to the TFO under section 25.2 of the *Transmission Regulation* as necessary for early procurement of long lead-time items and services.

3.9 Approval is in the Public Interest – Having regard to the transmission planning duties of the AESO as described in sections 33 and 34 of the EUA, its duty to respond to requests for service as described in section 29 of the EUA, information obtained from consultations, estimated costs, and system studies undertaken by the AESO, and in consideration of environmental, social, risk factors, and the AESO's long-term transmission system plans, the AESO has identified the need for 240kV transmission system development described in section 3.1 to establish a looped 240kV transmission network in the area northwest of the city of Fort McMurray, including development of two new 240 kV switching stations. Further, the AESO confirms that planning for forthcoming connections within the Northwest of Fort McMurray area will be consistent with the proposed Northwest Fort McMurray Plan. In consideration of these factors, the AESO submits that approval of this Application is in the public interest.

McMurray System Development. Such limitations pertain to operational matters that are beyond the scope of this application. The AESO would develop, as necessary, any operational limits that would be imposed on connections, prior to executing final supply contracts with the market participant and prior to energization of related facilities.

4 Relief requested

4.1 Having regard to the factors set out in section 38 of the *Transmission Regulation*, and in particular, subsections 38(d) and (e), the AESO submits that its assessment of the need for transmission system development is technically complete and that the manner proposed to meet the identified need is consistent with AESO long-term forecasts, transmission system plans, and the need to connect market participants to the system. As such, the AESO submits that approval of the need for the proposed transmission development described in section 3.1 is in the public interest.

4.2 For the reasons set out herein, the AESO requests that the Commission approve this application; issue an Approval of the need for 240kV transmission system development in the area northwest of the city of Fort McMurray to facilitate customer connections and establish a looped system to serve long term load growth in the area; and issue an Approval indicating that that the identified need can be met by developing transmission facilities between 2013 and 2015, to be worded as follows:[17] [18]

Required by Q3 2013:

1. **New 240 kV Switching Substations and Associated Transmission Lines:**

a. Add a new 240kV system switching substation, referenced here as NW FMM South, located in close proximity to existing line 9L57 south of the existing Dover 888S substation, to serve as a point of connection for customer connections in the area and as a point of termination for new transmmission line development,

[17] All line lengths are approximated to the accuracy level required by the AESO for transmission system planning. The legal owner of transmission facilities (TFO) will determine the exact line lengths when the detailed substation siting and transmission line routing and siting work is performed in preparation of its facility proposal, which will be filed with the Commission for approval.

[18] All line capacities are approximated to the accuracy level required by the AESO for transmission system planning purposes. The AESO and the legal owner of transmission facilities (TFO) will determine the exact line capacities through more detailed engineering work performed in developing the functional specifications which will be filed with the Commission for approval as part of the facility proposal.

containing appropriate switching and connection facilties, telecommunications, protections and controls to accommodate:

- The addition of necessary 240kV transmission lines with an approximate summer/winter rating of 750/970 MVA to connect via an in/out configuration to the exisitng line 9L57.

b. Add a new 240kV system switching substation, referenced here as NW FMM North, to serve as a point of connection for customer connections in the area, and as a point of termination for new transmission line development, containing appropriate switching and connection facilties, telecommunications, protections and controls to accommodate:

- the addition of approximately 50 km of new 240kV double-circuit transmission lines, both sides strung, with each circuit having an approximate summer/winter rating of 750/970 MVA, from existing line 9L08, via an in/out connection to the new NW FMM North substation.

c. Modify, alter, add, or remove equipment and any operational protections, control and telecommunication devices that may be required at existing facilities in the area to ensure proper integration of new faciliites into the transmission system.

Required by Q2 2015

2. New 240 kV Double Circuit, single-side strung Transmission Line:

a. Add approximately 80 km of double circuit 240kV transmission line, referenced as 9L95, single side strung, with an approximate summer/winter rating of 750/970 MVA, from NW FMM North to NW FMM South;

b. Add appropriate switching and connection facilities, telecommunications, protections and controls at NW FMM North and NW FMM South accommodate the termination of new line 9L95; and,

c. Modify, alter, add, or remove equipment and any operational protections, control and telecommunication devices that may be required at existing facilities in the area to ensure proper integration of new facilities into the transmission system.

All of which is respectfully submitted this 9th day of November 2011.

Alberta Electric System Operator

Doyle Sullivan, P. Eng.
Director, Regulatory Services

PART B – APPLICATION APPENDICES

The following appended documents support the Application (Part A). The appendices include some of the work undertaken by the AESO in the execution of its duties to plan the transmission system and in the preparation of this Application. All are provided for reference purposes only.

APPENDIX A **AESO System Planning Studies –** Appendix A contains the AESO *Northwest Fort McMurray Transmission Development: Engineering Study Report.* The report describes the identified need for transmission system development to serve forecasted load growth in the area, which is yet to be served by transmission facilities. The AESO performed studies to simulate the system performance under forecasted loading. Studies were used to determine its preferred alternative for transmission development, and to assess system performance following implementation. The report also describes in detail, the study scope, and study limitations and for reference, includes assumptions regarding future developments in the area northwest of the city of Fort McMurray and the larger area Fort McMurray area.

APPENDIX B **AESO Load and Generation Forecast –** Appendix B contains the AESO's *Northwest Fort McMurray System Planning Study – Load and Generation Forecasts* used in the *Northwest Fort McMurray Transmission Development: Engineering Study Report* contained in Appendix A.

APPENDIX C **TFO Capital Cost Estimates –** Appendix C contains the capital cost estimates referred to in this Application. Estimates were provided by ATCO and correspond to the scope of work for the AESO's Northwest Fort McMurray Plan. The estimates have been prepared by the TFO according to AESO direction. The estimates are prepared to an approximate accuracy level of (+/-30%), in accordance with the accuracy requirement specified in Commission Rule 007, NID10.

APPENDIX D **AESO Participant Involvement Program (PIP) –** Appendix D provides a summary of the AESO's PIP activities conducted regarding the need for the transmission developments described in this Application. Copies of the relevant materials distributed during the PIP are attached for reference.

APPENDIX E **Environmental and Socio-Economic Overview** – Appendix E provides information regarding potential for environmental and social effects associated with the proposed development. The report, described as a Land Impact Assessment, was requested by the AESO to assist in its overall assessment of the preferred development. The assessments conducted were driven by the major aspects defined in AUC Rule 007 NID12.

PART C – REFERENCES

i. **AESO Planning Duties and Responsibilities and Duty to Forecast Need –** Certain aspects o**f** AESO duties and responsibilities with respect to planning the transmission system are described in the Act. For example, section 17, subsections (g), (h), (i), and (j), states the general planning duties of the AESO[19]. Section 33 of the Act states that the AESO "must forecast the needs of Alberta and develop plans for the transmission system to provide efficient, reliable, and non-discriminatory system access service and the timely implementation of required transmission system expansions and enhancements". As stated in subsection 34(1) of the Act, when the AESO determines that an expansion or enhancement of the capability of the transmission system is or may be required to meet to the needs of Alberta and is in the public interest, the AESO must prepare and submit to the Commission for approval a needs identification document that describes the constraint or condition affecting the operation or performance of the system and indicates the means by which or the manner in which the constraint or condition could be alleviated. Where, as in this case, the AESO has identified a need to reinforce the transmission system to relieve anticipated reliability criteria violations, it has set about to determine a reasonable solution to meet the identified need. In determining the means by which, or the manner in which, the constraint or condition affecting the operation or performance of the transmission system could be alleviated, the AESO has applied engineering judgments and made assumptions as necessary; such judgments and assumptions being required and permitted by its prescribed responsibilities and authorities under the Act. In accordance with section 11 of the *Transmission Regulation*, the AESO has specifically considered technical, economic, social, environmental and other factors as necessary in determining its preferred option for system expansion.

ii. **Duty to Provide Transmission System Access** – Section 29 of the Act states that the AESO "must provide system access service on the transmission system in a manner that gives all market participants wishing to exchange electric energy and ancillary services a reasonable opportunity to do so". Where, as in this case, the market participant is requesting the expansion or enhancement of the capability of the transmission system to meet its distribution planning needs, the AESO must prepare and submit for Commission approval, as per section 34(1)(c), a needs identification document that describes a need to respond to requests for system access

[19] The legislation and regulations refer to the Independent System Operator or ISO. "AESO" and "Alberta Electric System Operator" are the registered trade names of the Independent System Operator.

service, including the assessments undertaken by the AESO regarding the manner proposed to address that need.

iii. **AESO Planning Criteria** – The AESO is required to plan a transmission system that satisfies applicable reliability standards. Section 2.0 of *AESO Transmission Reliability Criteria, Part II, System Planning*. March 11, 2005 states "The system will normally be designed to meet or exceed the Reliability Criteria under credible worst-case loading and generation conditions…". AESO planning criteria and load forecasts are also described in AESO engineering studies. AESO Planning criteria are described at: http://www.aeso.ca/rulesprocedures/8677.html.[20]

iv. **AESO Connection Process** – For information, a general overview of the AESO transmission system connection process, which may change from time to time, is provided at: http://www.aeso.ca/8602.html. [21] It is noted that the detailed development of operational mitigation measures applicable to a connection is an operational matter that is typically completed just prior to energization of the proposed transmission development (stage 5 of the connection process). Therefore, it does not form part of the needs identification document application.

v. **Application for Approval of the Need for Expansion or Enhancement of the Capability of the Transmission System –** This Application is directed solely to the question of the need for expansion or enhancement of the capability of the transmission system. Any reference within the Application to market participants or other parties and/or the facilities they may own and operate or may wish to own and operate is not intended to constitute an application for approval of such facilities, and the responsibility for seeking such regulatory or other approval remains the responsibility of such market participants or other parties.

vi. **Directions to the TFO** – Pursuant to subsection 35(1) of the Act, the AESO has directed the TFOs, in whose service territories the need is located, to prepare facility proposals to meet the need identified. The facility proposals are also submitted to the Commission for approval. The AESO has also directed the TFOs, pursuant to section 39 of the Act and section 14 of the *Transmission Regulation*, to assist in the preparation of the AESO's Application. The TFOs will be directed by the AESO under section 39 of the Act to prepare a proposal to provide services to address the need for the proposed transmission development.

[20] This link is provided for ease of reference and does not form part of this Application.

[21] This link is provided for ease of reference and does not form part of this Application.

vii. **Capital Cost Estimates** –The provision of capital costs estimates in the Application is for the purposes of relative comparison and context only. The AESO's responsibilities with respect to project cost reporting are described in the *Transmission Regulation*, including section 25, and AESO Rule 9.1.

APPENDIX A AESO SYSTEM PLANNING STUDIES

Northwest Fort McMurray Transmission Development

Engineering Study Report

File No. RP-05-1180

	Name	Signature	Date
Prepared/ Reviewed	Feng Chen P.Eng.		Nov. 3, 2011
Approved	Ata Rehman P.Eng.		Nov 3, 2011

APEGGA Permit to Practice P-8200

PROFESSIONAL ENGINEER ALBERTA
FENG CHEN

Nov 3, 2011

TABLE OF CONTENTS

1. INTRODUCTION 4
   1.1 Study Scope 4
2. CRITERIA, SYSTEM DATA, AND STUDY ASSUMPTIONS 7
   2.1 Alberta Reliability Standards 7
   2.2 Load and Generation Assumptions 8
      2.2.1 Load Assumptions 8
      2.2.2 Generation Assumptions 9
   2.3 Project Assumptions 10
      2.3.1 Fort McMurray 144kV System Reinforcement 11
      2.3.2 Fort McMurray Reactive Power Reinforcement 11
      2.3.3 North of Fort McMurray 240 kV Loop 11
      2.3.4 Thickwood Substation and Thickwood-Genesee 500 kV line Project 11
   2.4 Facility Ratings and Shunt Elements 12
   2.5 Dynamic Data and Assumptions 15
   2.6 Protection Fault Clearing Time 15
   2.7 Applicable Operating Policies and Procedures 16
   2.8 Study scenarios 16
      2.8.1 Power Flow Analysis 17
      2.8.2 Voltage Stability (PV) Analysis 17
      2.8.3 Short-Circuit Analysis 17
      2.8.4 Transient Stability Analysis 17
3. EXISTING SYSTEM ANALYSIS AND NEED ASSESSMENT 19
   3.1 Existing System Analysis – 2013 20
      3.1.1 Power Flow Analysis 20
      3.1.2 Voltage Stability Analysis 20
   3.2 Existing System Analysis – 2015 21
      3.2.1 Power Flow Analysis 21
      3.2.2 Voltage Stability Analysis 22
   3.3 Summary and Conclusions of the Need Assessment Studies 24
4. SYSTEM DEVELOPMENTS TO ADDRESS THE NEED 25
   4.1 Transmission Development Considerations 25
   4.2 Preferred Transmission Development 25
   4.3 Development Sequence 26
5. TRANSMISSION DEVELOPMENT PLAN – NEAR-TERM ASSESSMENT 28
   5.1 Power Flow Analysis 28
      5.1.1 System Normal (N-0) Results 28
      5.1.2 Single Element Contingency (N-1) Results 29
   5.2 Voltage Stability (P-V) Analysis 29
   5.3 Short Circuit Analysis 33
   5.4 Summary and Conclusion 33
6. TRANSMISSION DEVELOPMENT PLAN – LONG-TERM ASSESSMENT 34
   6.1 Power Flow Analysis 34
      6.1.1 System Normal (N-0) Results 34
      6.1.2 Single Element Contingency (N-1) Results 34
   6.2 Voltage Stability (P-V) Analysis 35
   6.3 Short Circuit Analysis 36
   6.4 Dynamic Stability Analysis 36
   6.5 Summary and Conclusions 37
7. ACCELERATED LOAD GROWTH SENSITIVITY ANALYSIS 38

7.1 Power Flow Analysis 38
7.1.1 System Normal (N-0) Results 38
7.1.2 Single Element Contingency (N-1) Results 38
7.2 Voltage Stability (P-V) Analysis 38
7.3 Summary 39
8. PROJECT INTERDEPENDANCIES 40
9. SUMMARY AND CONCLUSIONS 41

List of Figures

Figure 1-1: Assumed Fort McMurray Area 2020 System Configuration and NW FMM Plan Study Area 6
Figure 2-1: Northern Forecasted Load Zone and Southern Forecasted Load Zone 9
Figure 4-1: The Preferred NW FMM Transmission Development 27

List of Tables

Table 2-1: Acceptable Range of Steady State Voltage (kV) 8
Table 2-2: List of projects included in the study 10
Table 2-3: Facility Ratings in the Study Area and Vicinity – Key 240 kV Transmission Lines 12
Table 2-4: Transmission Line Ratings Associated with Future Projects 13
Table 2-5: Shunt Elements in the Study Area 14
Table 2-6: Assumptions for Clearing Times of Facilities 15
Table 3-1: P-V Analysis Summary – 2013 Summer Peak 20
Table 3-2: P-V Analysis Summary – 2013 Winter Peak 21
Table 3-3: Voltage Deviation Analysis Summary – 2015 Summer Peak 22
Table 3-4: Voltage Deviation Analysis Summary – 2015 Winter Peak 22
Table 3-5: P-V Analysis Summary – 2015 Summer Peak 23
Table 3-6: P-V Analysis Summary – 2015 Winter Peak 23
Table 5-1: P-V Analysis Summary – 2013 Summer Peak 30
Table 5-2: P-V Analysis Summary – 2013 Winter Peak 30
Table 5-3: P-V Analysis Summary – 2014 Summer Peak 31
Table 5-4: P-V Analysis Summary – 2014 Winter Peak 31
Table 5-5: P-V Analysis Summary – 2015 Summer Peak 32
Table 5-6: P-V Analysis Summary – 2015 Winter Peak 32
Table 6-1: P-V Analysis Summary – 2020 Summer Peak 35
Table 6-2: P-V Analysis Summary – 2020 Winter Peak 36
Table 7-1: P-V Analysis Summary – 2020 Sensitivity 39

List of Attachments

ATTACHMENT A - Generation Dispatch
ATTACHMENT B - Capacitor Banks
ATTACHMENT C - Existing System Power Flow Analysis
ATTACHMENT D - Existing System PV Analysis
ATTACHMENT E - Near Term Power Flow Analysis
ATTACHMENT F- Near Term PV Analysis
ATTACHMENT G - Long Term Power Flow Analysis

ATTACHMENT H - Long Term PV Analysis
ATTACHMENT I - Short Circuit Analysis
ATTACHMENT J – Transient Stability Analysis
ATTACHMENT K - Sensitivity Analysis

1. INTRODUCTION

The area northwest of the City of Fort McMurray (NW FMM Area) contains significant established oilsands reserves, similar in production capacity to those reserves that are currently under development elsewhere in the Fort McMurray (FMM) area, including directly to the east. Oilsands production in the NW FMM Area has yet to be undertaken, therefore, the area is un-served by existing transmission infrastructure.

Recently, several large oilsands developers have announced projects located in the NW FMM Area and several have applied the AESO for connection to the Alberta Interconnected Electric System (AIES). These planned developments are a cue to the AESO to undertake the necessary planning for transmission system developments in the area to meet the needs of these operations in the short and long term.

Developers in the NW FMM Area are planning oil recovery operations employing both Steam Assisted Gravity Drainage (SAG-D) and Thermal Assisted Gravity Drainage (TAGD) technology for in-situ bitumen extraction along with associated processing and pumping facilities and this is driving strong electric load growth projections for the area. The area is forecasted to experience substantial load growth over the next 10 years. The AESO's area load forecast is for 366 MW of load by 2020, and depending on timing and magnitude of anticipated developments, loads could reach 450 MW in the same timeframe. The AESO has received several requests for connection of oilsands extraction facilities beginning in 2013. The AESO is forecasting additional connections and associated load over the next decade.

As there are currently no existing transmission system facilities in the NW FMM Area, the AESO has considered the needs of customers, and the long term development potential, in developing its transmission plan for the area. The AESO's Northwest Fort McMurray Transmission Development Plan (NW FMM Plan) will establish a regional transmission development plan that will meet forecasted load growth and provide transmission access to requested connections while maintaining options for long term transmission development. This NW FMM planning study will establish the need for transmission system development over the period of 2013 to 2020, assess feasible transmission alternatives, and confirm that transmission system performance meets AESO reliability criteria following implementation of the AESO NW FMM Plan.

1.1 Study Scope

The scope of the studies outlined in this report was limited to:

- Identifying the need for transmission system reinforcement in area northwest of the City of Fort McMurray (the NW FMM Area or study area).
- Determining a viable transmission plan that would reliably address the identified need for system developments in the study area, and ensuring the effectiveness of the proposed developments for approximately the next 10 years.

The study area identified for this project was limited to the area northwest of the City of Fort McMurray located within the AIES FMM planning area 25, as shown in Figure 1-1. Area 25 is to be monitored for any voltage and thermal violations.

Steady state, voltage stability and short circuit analyses were performed to compare the system response before and after completion of the proposed NW FMM Plan. Transient stability analyses were performed on the proposed plan.

Upon completion of the need assessment studies, a transmission plan was developed, considering any system constraints identified. The following studies were performed on the NW FMM Plan under Category A, Category B, and selected Category C contingencies:

a) Power flow analysis for the thermal loading and voltage deviation assessment

b) Voltage stability (PV) analysis to evaluate the voltage stability margin

c) Transient stability analysis to assess the transient response of the system during a fault and after a fault has been cleared

d) Short-circuit analysis to calculate the maximum short-circuit levels at the critical buses before and after the recommended system developments

e) Sensitivity studies to evaluate the impact that variations in load forecast assumptions would have on the recommendations for reinforcements

The studies scoped and executed for the NW FMM Plan do not include analysis of system constraints beyond the study area and do not include recommendations for the alleviation of such constraints. The study period is 2013 to 2020.

The following section discusses the study criteria, modeling, methodology and system studies assumptions applied for the NW FMM Plan studies.

Figure 1-1: Assumed NW FMM Study Area System Configuration

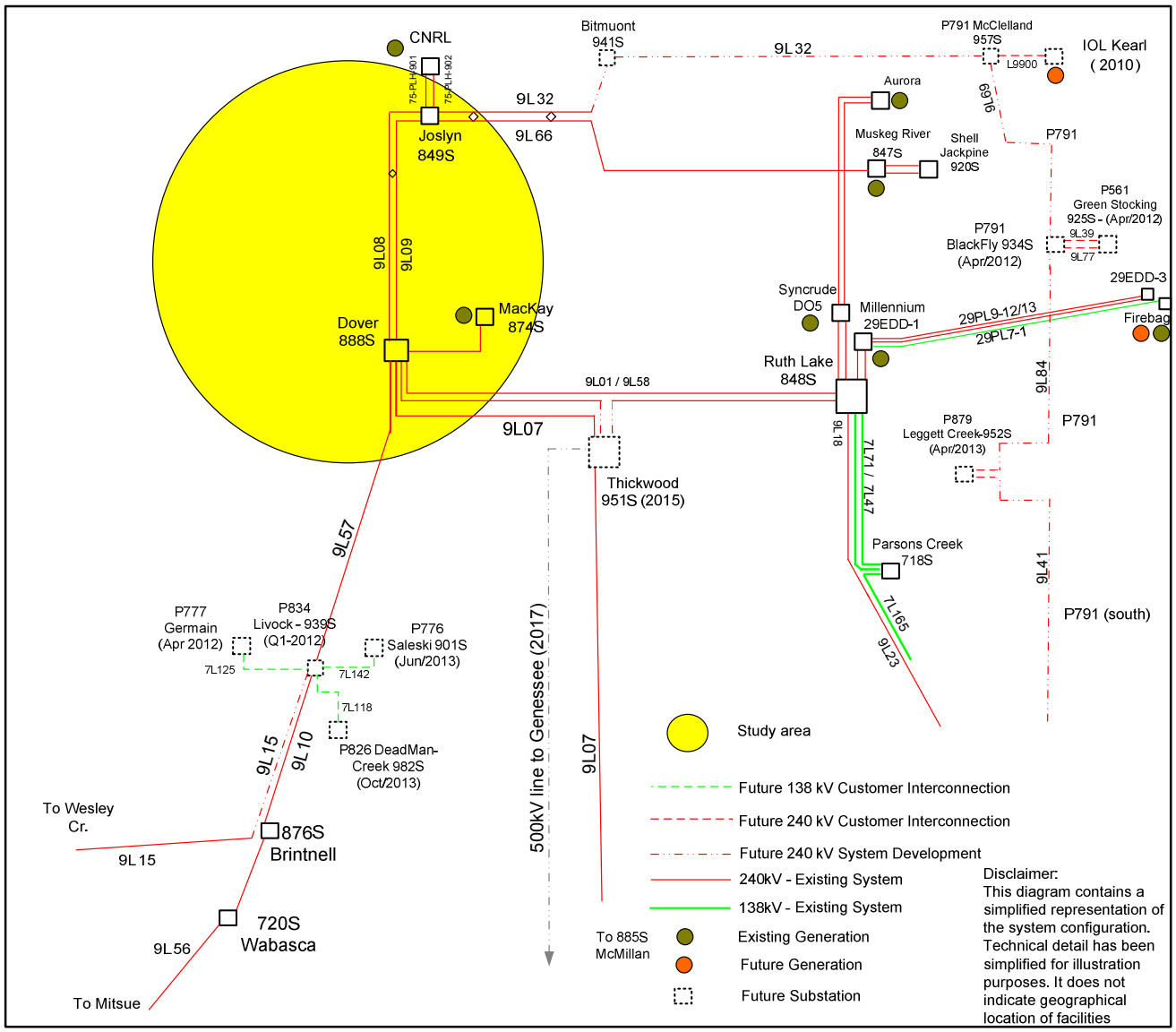

2. CRITERIA, SYSTEM DATA, AND STUDY ASSUMPTIONS

The study assumptions and system data reflect the most current information available when the studies were conducted. The AESO has taken reasonable steps to verify the assumptions and system data, where possible. The bulk transmission system configuration is consistent with the AESO's draft 2011 Long-Term Transmission Plan.

This section discusses the applicable criteria, system data, methodology and specific study assumptions applied in this study.

2.1 Alberta Reliability Standards

The Alberta Reliability Standards were applied to assess the system performance for the NW FMM Plan.[1] Category A (all transmission elements in-service), Category B (a single transmission element out-of-service), and selected Category C (two or more transmission elements out-of-service) conditions were examined.

The following is a general explanation of the Alberta Reliability Standards (the Reliability Criteria) applied throughout this study:

- The Alberta Reliability Standards requires that system performance be evaluated under Category A (N-0), Category B (N-1) and Category C (N-2) conditions.
- Category A represents a normal system with no contingencies and all facilities in service. Under Category A conditions, the system must be able to supply all firm load and firm transfers to other areas. All equipment must operate within its applicable rating, voltages must be within their applicable ratings, and the system must be stable with no cascading outages.
- Category B events result in the loss of any single specified system element under specified fault conditions with normal clearing. The specified elements are a generator, a transmission circuit, a transformer or single pole of a DC line. The acceptable impact on the system is the same as of Category A.
- Category C events result in the loss of two elements under specified fault conditions with normal clearing. The specified elements are a generator, a transmission circuit, a transformer or single pole of a DC line. The acceptable impact on the system is the same as of Category A; however, load curtailment (RAS) is allowed to maintain the system stable.
- AESO Thermal Loading Criteria requires that the continuous thermal rating of any transmission element shall not be exceeded under normal operating conditions. In this study, thermal limits were assumed to be one hundred percent of the normal summer and winter ratings.

[1] The Alberta Reliability Standards is available at: http://www.aeso.ca/rulesprocedures/8677.html

- System-Normal minimum and maximum voltage limits specified by the Alberta Reliability Standards were used to identify Category A system voltage violations, while the extreme minimum and maximum limits were used to identify the Category B system violations. Table 2-1 shows the acceptable steady state voltages for different transmission voltage classes.
- Voltage Deviation Criteria was applied for Category A and B contingency analysis.
- Cascading outages or unplanned loss of load/generation following a single contingency is not acceptable. All single contingencies that resulted in cascading outages or unplanned loss of load/generation were recorded as transmission system deficiencies.

Table 2-1: Acceptable Range of Steady State Voltage (kV)

Nominal	Extreme Minimum	Normal Minimum	Normal Maximum	Extreme Maximum
500	500	510	540	550
240	220	240	264	264
240*	220	250	269	275
144	130	137	151	155
138	124	135	145	150
72	65	71	75	78
69	62	65	72	74

*Acceptable range of steady state voltage for Fort McMurray area only.

2.2 Load and Generation Assumptions

2.2.1 Load Assumptions

The AESO defines the northeast (NE) region as Area 25 (Fort McMurray), Area 27 (Athabasca), Area 28 (Cold Lake), and Area 33 (Fort Saskatchewan). The 2013, 2014, 2015 and 2020 NE region load forecasts were used in this study. More detail regarding the AESO load forecast is presented in the accompanying *Northwest Fort McMurray System Planning Study – Load and Generation Forecasts* Report, provided under separate cover.

The NW FMM Area studied in this report is generally considered to fall to the west of existing 240 kV line 9L08 and 9L09. The AESO's forecasted load in the study area is approximately 366 MW by 2020. Within this area, the AESO considered load forecasts for the northern and southern portions and identified that loads can be expected to be concentrated in each portion around the several developments that are being planned in the area prior to 2020. Figure 2-1 indicates that load in the northern portion of the area is forecasted to be approximately 264 MW by 2020 and load in the southern portion is forecasted to be approximately 102 MW by 2020. The AESO also developed an accelerated load growth sensitivity case, which is discussed in detail in Section 7. The AESO further considered the potential for area load growth in the 2025 timeframe, and based on several factors, including uncertainty whether developers employ SAGD or TAGD technology in the future, determined that long-term potential load in the area could range from 580 MW to 1060 MW in this time period and beyond.

The load forecasts for areas 25, 27, 28 and 33 include station service load, system load, and Behind-the-Fence (BTF) load.

For transient stability analysis, it was assumed that 20% of the AIES load will be converted to the motor load: 10% small motors and 10% large motors. For the FMM area (Area 25), the AESO will investigate a higher percentage motor load composition of 70%. As for the NW FMM area, the load will be modeled with 70% motor load: 40% small motors and 30% large motors.

Figure 2-1: Northern Forecasted Load Zone and Southern Forecasted Load Zone

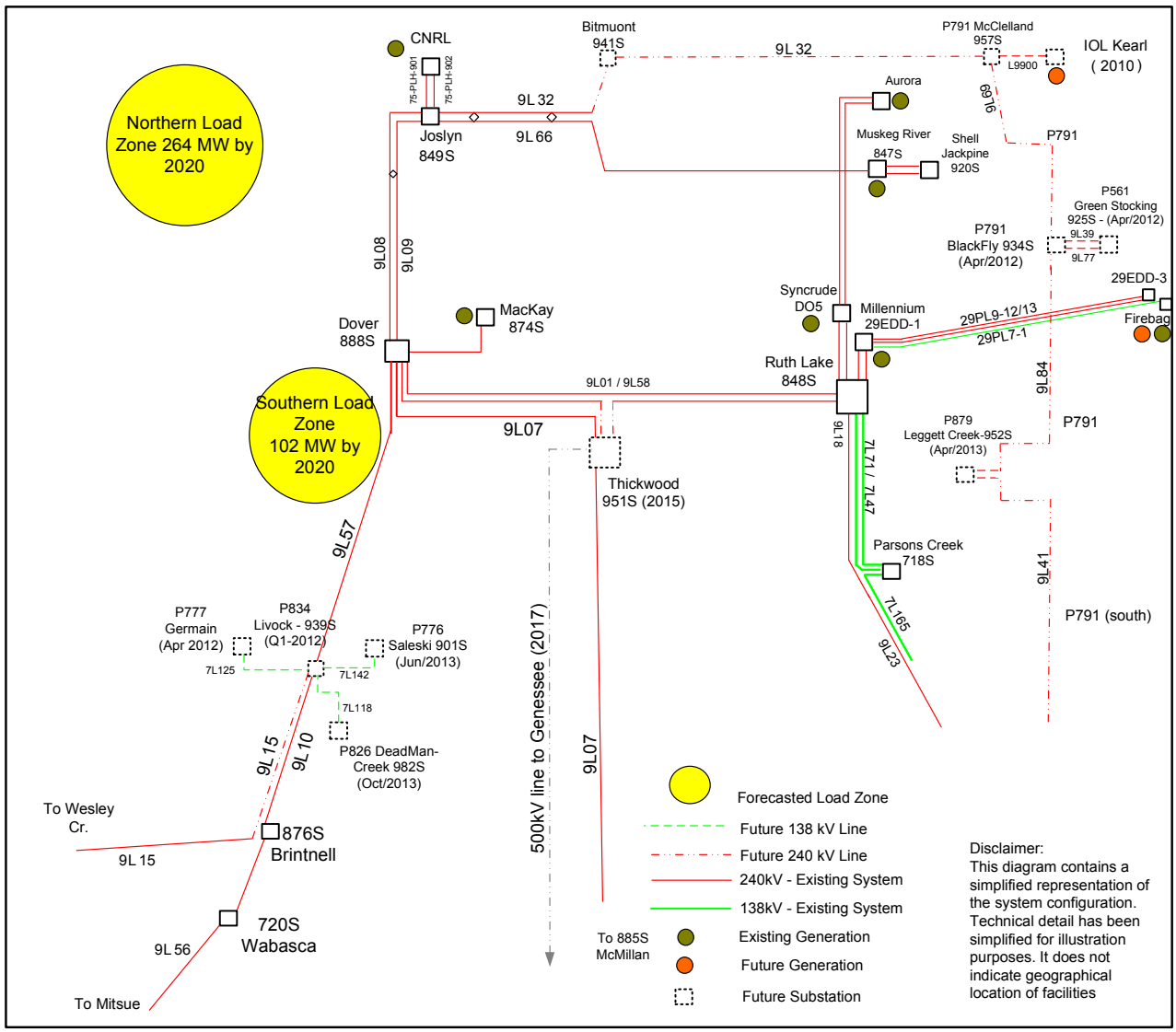

2.2.2 Generation Assumptions

The generation within the NE region consists primarily of gas-fired cogeneration and steam and wood waste plants. The list of generation in the FMM area (Area 25) and their dispatch levels to be modeled in the 2013, 2014, 2015 and 2020 cases are given in Attachment A – Generation Dispatch Table. The study cases are based on the generation forecast used in the

draft 2011 Long-Term Transmission Plan. Detail regarding the forecast information can be found in the separately prepared *Northwest Fort McMurray System Planning Study – Load and Generation Forecasts* Report.

The following intertie flows were implemented.

- Alberta-Saskatchewan: 0 MW for all conditions
- Alberta-BC: 780 MW import for all peak load conditions
  0 MW interchange for all Light load conditions

2.3 Project Assumptions

It was assumed that the developments listed in Table 2-2 will be part of the AIES at their anticipated in-service dates. In the study cases, the status of the transmission system developments in Table 2-2 depended on the projected facility in-service dates. A description of developments significant to the NW FMM studies follows Table 2-2.

Table 2-2: List of projects included in the study

Project Number	Name	Projected In-Service Date (ISD)	Description
P834	Livock 240/144kV substation	Dec-2011	240/144kV substation Cutting in and out of 240 kV 9L57 with two 240/144 kV transformers
P673	Fort McMurray 144kV System Reinforcement	Dec-2011	Salt Creek 240/144 kV substation
P791	North of Fort McMurray 240kV Loop	Apr-2012	240 kV line from proposed Salt Creek to Black Fly to McClelland switching sub
P1092	Fort McMurray Reactive Power Reinforcement	April-2012	100 MVar Cap bank at Dover, 100 MVar Cap bank at Whitefish and 60 MVar Cap banks at Leismer
P629 CTI	Heartland Sub. Development	2013	2x500 kV line terminations into the 500 kV new Heartland Substation
P1066 CTI	Heartland Area Development	2013	Heartland substation 240 kV development and associated development in the Heartland area.
P1010	Fort McMurray 240 kV Thickwood substation	2015	240 kV development of FMM Thickwood sub, associated Line Terminations and VAR support

P961 CTI	East-HVDC (Monopole)	2014	East Monopolar 500 kV-HVDC line and associated VAR support
P962 CTI	West-HVDC (Monopole)	2014	West Monopolar 500 kV-HVDC line and associated VAR support
2011 Long Term Plan	9L15 Re-termination	2015	Re-terminate the east end of the Brintnell-Wesley Creek 240 kV 9L15 from Brintnell to Livock
P1012 CTI	Thickwood-Genesee 500 kV line	2017	Thickwood 500 kV upgrade and new 500 kV circuit from Thickwood to Genesee

2.3.1 Fort McMurray 144kV System Reinforcement

The AUC has approved the need for a new 240/144 kV Salt Creek substation and an associated 144 kV transmission line.[2] The existing 240 kV transmission line, 9L990, will be terminated in an in/out arrangement at the new Salt Creek substation. The new 144 kV transmission line will run from the Salt Creek substation to Hangingstone 820S substation. Hangingstone, Ruth Lake, Kinosis and Leismer substations will all be modified accordingly.

2.3.2 Fort McMurray Reactive Power Reinforcement

The AUC has approved the need for 100 MVar of shunt capacitor at the Dover 888S, 100 MVar capacitor banks at Whitefish Lake 825S, and 60 MVar Capacitor banks at Leismer 72S due to voltage instability in FMM area.[3]

2.3.3 North of Fort McMurray 240 kV Loop

The AUC has approved the need for a new double-circuit 240 kV line with one side strung running north from the Salt Creek 977S substation south of the City of Fort McMurray, to a new substation designated Black Fly 934S, continuing north and terminating at a new substation designated McClelland 957S, on existing line L9900.[4] The approved development, referred to as the North Fort McMurray Transmission Development (NFMTD), would establish a 240 kV loop in the area northeast of the City of Fort McMurray that would serve developing oilsands operations in that area.

2.3.4 Thickwood Substation and Thickwood-Genesee 500 kV line Project

Critical Transmission Infrastructure (CTI) designated in the Fort McMurray area includes the addition of a new 500 kV circuit from the Wabamun lake area to Fort McMurray and a new 500/240 kV substation, Thickwood 951S, with additional area VAR support. The anticipated in

[2] AUC Approval Number U2011-48

[3] AUC Approval Number U2011-243

[4] AUC Approval Number U2011-216

service date for the 240 kV development of the Thickwood substation is 2015 while the 500 kV portion of this development is expected to be in-service by 2017.

2.4 Facility Ratings and Shunt Elements

Table 2-3 provides the ratings of the existing transmission lines in the NE region.

Table 2-3: Facility Ratings in the Study Area and Vicinity – Key 240 kV Transmission Lines

Line	From	To	Voltage (kV)	Rate A (MVA)	Rate B (MVA)	Rate C (MVA)
7L02	McMillan 885S	Crow Lake 860S	144	109.2	139	150.5
7L15	Long Lake 841S	Kinosis 856S	144	139.9	179.2	193.6
7L36	Algar 875S	Gregoire Tap	144	94.9	94.9	123.6
7L36	Hangingstone 820S	Gregoire Tap	144	94.9	94.9	123.6
7L38	Algar 875S	Horse River 917S	144	95.8	95.8	124.6
7L38	Mariana 833S	Crow Lake 860S	144	109.2	139	150.5
7L47	Ruth Lake 848S	Parsons Creek 718S	144	94.9	94.9	123.6
7L71	Ruth Lake 848S	Parsons Creek 718S	144	94.9	94.9	123.6
7L97	Parsons Creek 718S	Hangingstone 820S	144	120	120	123.6
7LA36	Gregoire Tap	Gregoire 883S	144	109.2	139	150.5
7LA38	Mariana 833S	Horse River 917S	144	95.8	95.8	124.6
29PL9-1	Ruth Lake 848S	Millennium 29EDD-1	240	332	332	432
29PL9-2	Ruth Lake 848S	Millennium 29EDD-1	240	332	332	432
29PL9-3	Millennium 29EDD-1	EDD34 29EDD-3	240	400	400	400
29PL9-4	Millennium 29EDD-1	EDD34 29EDD-3	240	400	400	400
75PHL-903	Hormin 7501	Horup 7502	240	408	523	568
75PHL-904	Hormin 7501	Horup 7502	240	408	523	568
75PKL-901	Hormin 7501	Joslyn 849S	240	816	1046	1136
75PKL-902	Hormin 7501	Joslyn 849S	240	816	1046	1136

Line	From	To	Voltage (kV)	Rate A (MVA)	Rate B (MVA)	Rate C (MVA)
957L	Leismer 72S	Christina Lake 723S	240	594	713	784
9L01	Dover 888S	Ruth Lake 848S	240	332	332	432
9L07	McMillan 885S	Dover 888S	240	549	701	759
9L08	Dover 888S	Joslyn 849S	240	753	831	1049
9L09	Dover 888S	Joslyn 849S	240	753	831	1049
9L22	Heart Lake 898S	Whitefish Lake 825S	240	498	498	648
9L55	McMillan 885S	Heart Lake 898S	240	549	701	759
9L56	Wabasca 720S	Brintnell 876S	240	488	498	648
9L57	Dover 888S	Brintnell 876S	240	416	498	565
9L58	Dover 888S	Ruth Lake 848S	240	332	332	432
9L66	Muskeg River 847S	Joslyn 849S	240	376	483	524
9L930	Leismer 72S	Whitefish Lake 825S	240	498	498	648
9L990	Kino Tap	Ruth Lake 848S	240	332	332	432
9L990	Leismer 72S	Kino Tap	240	332	332	432
9L990	Kino Tap	Kinosis 856S	240	520	663	663
9LJH1	Muskeg River 847S	Jackpine 920S	240	408	523	568
9LJH2	Muskeg River 847S	Jackpine 920S	240	408	523	568
RL1	Ruth Lake 848S	Sync D05	240	400	400	400
RL2	Ruth Lake 848S	Sync D05	240	400	400	400
AL-1	Sync D05	Aurora G01	240	312	356	400
AL-2	Sync D05	Aurora G01	240	312	356	400

Table 2-4 shows the future transmission lines to be added to the study scenarios.

Table 2-4: Transmission Line Ratings Associated with Future Projects

Line	From	To	Voltage (kV)	Rate A (MVA)	Rate B (MVA)	Rate C (MVA)
7L01	Hangingstone 820S	Salt Creek 977S	144	217	281	281
7L02	Hangingstone 820S	Salt Creek 977S	144	217	281	281
7L36	Salt Creek 977SS	Gregoire Tap	144	94.9	94.9	123.6
7L97	Hangingstone 820S	Tower Road 933S	144	100	100	100
7L165	Parsons Creek 718S	Tower Road 933S	144	100	100	100

Line	From	To	Voltage (kV)	Rate A (MVA)	Rate B (MVA)	Rate C (MVA)
7L125	Livock 939S	Germain 950S	144	165	203	223
9L69	Black Fly 939S	McClelland	240	753	966	1049
TBD	Dover 888S	MacKay	240	549	701	759
9L39	Husky Green Stocking	Black Fly 939S	240	498	498	648
9L77	Husky Green Stocking	Black Fly 939S	240	498	498	648
9L07	McMillan 885S	Thickwood	240	550	702	660
9L01	Dover 888S	Thickwood	240	550	702	660
9L10	Livock 939S	Brintnell 876S	240	416	527	527
9L18	Ruth Lake 848S	Poplar Island 965S	240	520	663	663
9L23	Poplar Island 965S	Salt Creek 977S	240	520	663	663
9L84	Ivanhoe 952S	Salt Creek 977S	240	753	966	1049
9L57	Dover 888S	P948_AOSC	240	416	527	527
9L58	Dover 888S	Thickwood	240	416	527	499
9L58	P948_AOSC	Livock 939S	240	416	527	527
9L69	Black Fly 939S	Ivanhoe 952S	240	753	966	1049
9L990	Kino Tap	MEGSRMT	240	520	663	663
9L990	Kino Tap	Salt Creek 977S	240	250	250	250
9L990	Leismer 72S	MEGSRMT	240	520	663	663

Capacitor banks and reactors in the study area are shown in Table 2-5. Detailed dispatches can be found in Attachment B.

Table 2-5: Shunt Elements in the Study Area

Substation Name and Number	Nominal Bus Voltage (kV)	Number of Blocks	MVar
Leismer 72S	144	2	30
Dover 888S	240	1	100
Dover 888S	240	1	-40
Horizon Upgrading 3	34	1	21.11
Horizon Upgrading 2	34	1	10.56
Horizon Upgrading 4	34	1	21.11
Horizon Upgrading 5	34	1	14.57
Horse River 875S	144	2	13.78
Salt Creek 977S	240	1	-34.96

Substation Name and Number	Nominal Bus Voltage (kV)	Number of Blocks	MVar
McMillan 885S	25	1	-20
Steepbank 1 836S	13.8	1	8.17
Hangingstone 1 820S	25	2	5
Kinosis 856S	25	1	-20
Hormin 1 7501	34	1	21.11
Steepbank 2 836S	13.8	1	8.17
Hangingstone 2 820S	25	2	5
Wabasca 720S	25	3	-5
Thickwood	240	2	100
Thickwood	34	SVC	-75/+90
Hormin 2 7501	34	1	21.11

2.5 Dynamic Data and Assumptions

Validated dynamic data was used for existing equipment in the AIES such as generators, Wind Power Facilities (WPFs), motor loads, and Static VAR Compensators (SVCs) when such data was available. Generic dynamic models were adopted for existing equipment if validated data was not available and for facilities planned to be in service within the timeline of the NW FMM studies.

2.6 Protection Fault Clearing Time

Dynamic contingency analysis will consider the generic clearing times as provided by the AESO Transmission Reliability Criteria, Part II System Planning: Standard New System Clearing Times. For the existing and proposed transmission lines, the fault clearing times in Table 2-6 were used in the study.

Table 2-6: Assumptions for Clearing Times of Facilities

Nominal Voltage (kV)	Fast End (Cycles)	Slow End (Cycles)
500	4	6
240	5	7

2.7 Applicable Operating Policies and Procedures

OPP 505 will be applied to provide criteria and policies for the operation of the FMM area (Area 25) transmission system and to define policies and procedures for the System Controller (SC) in implementing transfer limits and ensuring system reliability in the FMM area.

OPP 702 will be applied to establish pre-contingency voltage profiles in the study region. The region voltage will be monitored following a Category B and selected C contingencies to document any differences with the required minimum voltage at the key nodes.

2.8 Study scenarios

Both summer peak (SP) load and winter peak (WP) load conditions were assessed for thermal overloading and low voltage violation. System light (SL) load levels were also examined to ensure overvoltage will not be an issue during light load conditions.

The years 2013, 2014 and 2015 were selected for near-term analyses because the load in the study area is forecasted to grow rapidly in this time period and the 240 kV development of the proposed 500/240 kV Thickwood substation, with additional Var support, are assumed to be in-service by 2015.

The system conditions for 2020 were assessed to ensure that the proposed transmission development will be sufficient for reliable system performance in the long term.

In addition, a 2020 load sensitivity study case was tested to assess the capability of the system to accommodate higher than forecast load growth. The sensitivity can also serve as a proxy for evaluating system performance beyond the 2020 timeframe under forecasted load conditions.

In summary, the system performance was evaluated for the following years and load conditions:

- 2013 NE (Region) summer peak with in flow into NE and with MacKay generator out of service
- 2013-14 NE winter peak with in flow into NE and with MacKay generator out of service
- 2014 NE summer peak with in flow into NE and with MacKay generator out of service
- 2014-15 NE winter peak with in flow into NE and with MacKay generator out of service
- 2015 NE summer peak with in flow into NE and with MacKay generator out of service
- 2015-16 NE winter peak with in flow into NE and with MacKay generator out of service
- 2015 NE light load with high out flow from NE
- 2020 NE summer peak with in flow into NE and with MRCP generator out of service
- 2020-21 NE winter peak with in flow into NE and with MRCP generator out of service
- 2020-21 NE using future potential growth scenario with in flow into NE and with MRCP generator out of service
- 2020 NE light load with high out flow from NE

2.8.1 Power Flow Analysis

For the power flow analysis, Category A and Category B contingencies were simulated. The system in the study area and its vicinity was monitored to identify any violation of the Reliability Criteria, including thermal overload and voltage issues.

The contingencies considered for the power flow studies include the outage of transmission elements rated at 138 kV and above in the study area and its vicinity.

The area that was monitored to record any violation of the Reliability Criteria includes all the transmission components in the study area and its vicinity.

2.8.2 Voltage Stability (PV) Analysis

In the NW FMM studies, the PV analysis was performed on the scenarios and critical contingencies identified in the power flow analysis. The methodology used for the PV analysis was to incrementally increase the load in the FMM area (the sink) to identify the point of voltage instability (the nose point) under normal and contingency conditions. This allowed the voltage stability margin to be calculated to ensure a sufficient stability margin exists under the various system scenarios discussed previously.

In the PV analysis, the sink was considered as the electrical load in the FMM area. The source that can respond to the specified sink was generation in the Wabamun area.

These assumptions created the most stressed conditions for the PV analysis in the study area.

2.8.3 Short-Circuit Analysis

For the short-circuit analysis, all the generators in and around the study area were switched on to evaluate the maximum fault current under three-phase-to-ground faults and single-line-to-ground faults. Three-phase faults typically create the maximum fault current. Single-line-to-ground faults were calculated because under certain circumstances they may exceed the three-phase fault currents. The calculated fault currents under three-phase-to-ground faults and single-line-to-ground faults should be considered by the TFOs when specifying substation equipment.

2.8.4 Transient Stability Analysis

In the transient stability analysis, a three-phase–to-ground fault was applied to critical 240 kV and higher voltage class transmission lines in the FMM area to assess system stability with the proposed transmission developments in service. The following selected Category C (C3, C5 and C8) events were also analyzed to test the system transient stability. The fault was cleared by opening the near-end and far-end breakers of the line according to the time delay given in Table 2-6.

Category C3 faults are defined as a three phase fault with normal clearing time and manual system adjustment, followed by another three phase fault with normal clearing time.

Category C5 faults are defined as double line-to-ground faults of a double circuited transmission tower with normal clearing time.

Category C8 faults are defined as single line-to-ground faults of transmission lines with delayed clearing time (stuck breaker condition).

A system dynamic response is considered acceptable if the following conditions are met after a disturbance:

- All the generators remain stable and connected to the AIES
- All oscillations in the system are damped successfully within approximately 20 seconds following a contingency

3. EXISTING SYSTEM ANALYSIS AND NEED ASSESSMENT

This section assesses the capability of the existing transmission system to which future transmission developments serving the area would be connected. As illustrated in Figure 2-1, the AESO's NW FMM Area load growth assessment determined that load is expected to develop first in two zones, one in the northern portion and one in the southern portion of the area. Since there is currently no transmission system in the area to connect these loads, the existing system assessment required the AESO to make assumptions regarding where the loads in the area would be connected to the existing transmission system near the NW FMM study area. The Reliability Criteria and the Alberta Reliability Standards were applied to benchmark system performance in planning area 25 and identify existing transmission system constraints.

The 2013 scenarios are considered as the existing system configuration prior to implementation of the NW FMM Plan. It is assumed that filed and approved transmission developments in FMM area with in-service dates before the end of 2013 have been implemented. The existing system assessment does not include any proposed new development within the NW FMM Area and no forecasted loads in the NW FMM area are included.

System performance in 2015 under assumed loading was also studied to identify the transmission capacity needed to serve the forecasted load growth in the area. Since no transmission system exists in the area, the AESO assumed that future loads in the two load zones were connected in the most direct manner to the closest existing transmission facilities to the east. Future loads in the southern load zone were assumed to be connected to existing line 9L57 via a future 240kV substation called NW FMM South. Future loads in the northern load zone were assumed to be connected to existing line 9L08 via a future 240kV substation called NW FMM North. Filed and approved transmission developments with projected in-service dates before the end of 2015 were assumed to be implemented.

Power flow and voltage stability analysis were performed for system normal condition (Category A) and for single contingencies (Category B) in existing system assessment. All 138 kV and above transmission element outages within the study area were conducted. The results of the contingency analysis are summarized in the following sections. The power flow diagrams and PV plots are presented in Attachment C and D.

3.1 Existing System Analysis – 2013

3.1.1 Power Flow Analysis

Steady state analysis, including the evaluation of system normal and single contingencies, was performed using the 2013 summer peak and winter peak load scenarios. The results show that there were no thermal violations. However post transient voltage deviation criteria was violated at the Fort McMurray (FMM) 144 kV system under the contingency of McMillan 885S 240/144 kV transformer or the 144 kV line from Hangingstone 820S to Salt Creek 977S. The AESO is currently in the process of developing a transmission plan to address voltage issues in that area. This issue is beyond the study area and therefore beyond the scope of the study undertaken. This issue will not be addressed further in this report. The power flow results are presented in Attachment C.

3.1.2 Voltage Stability Analysis

Voltage stability analysis was performed for system normal condition (Category A), for single contingencies (Category B) and selected double contingencies (Category C) using the 2013 summer peak and winter peak scenarios to determine the existing system reactive margin and maximum operating load limits. The bus voltages in the FMM area (Area 25) were monitored during the area load increase.

The forecasted FMM area 2013 summer peak and winter peak load were 1643 MW and 1811 MW respectively. The Reliability Criteria requires a minimum of 5% operating margin for system normal condition (Category A) and single contingencies (Category B). A minimum of 2.5% operating margin is required for Category C contingencies (N-2). The operating limit for each critical contingency was compared to the forecasted 2013 system load level to determine whether the voltage stability criteria were met.

The results of the voltage stability analysis are summarized in Table 3-1 and Table 3-2. The results showed that the transmission system in 2013 has sufficient margin to satisfy the voltage stability criteria. The P-V plots are presented in Attachment D.

Table 3-1: P-V Analysis Summary – 2013 Summer Peak

2013 P-V Analysis Summary				
System Normal and Category B Contingencies	Forecasted 2013 Summer Peak (MW)	105% Margin (MW)	Nose Point (MW)	Meets Voltage Criteria?
Normal operation condition	1643	1725	2003	YES
Losing Muskeg Generation	1643	1725	1903	YES
240 kV 9L10 Brintnell 876S to Livock 939S	1643	1725	1913	YES
240 kV 9L57 Livock 939S to NW FMM South	1643	1725	1933	YES
240 kV 9L94 Dover 666S to NW FMM South	1643	1725	1933	YES

240 kV 9L960 Whitefish 825S to Deerland 13S	1643	1725	1933	YES
240 kV 971L Conklin 762S to Sunday Creek	1643	1725	1923	YES
Category C5 Contingencies	**Forecasted 2013 Summer Peak (MW)**	**102.5% Margin (MW)**	**Nose Point (MW)**	**Meets Voltage Criteria?**
9L08 9L09, Dover 888S to NW FMM North and Joslyn 849S Double Circuit 240 kV Lines	1643	1684	1953	YES
9L76 9L09, Joslyn 849S to NW FMM North and Dover 888S Double Circuit 240 kV Lines	1643	1684	1953	YES
9L01 9L58, Dover 888S to Ruth Lake 848S Double Circuit 240 kV Lines	1643	1684	1993	YES

Table 3-2: P-V Analysis Summary – 2013 Winter Peak

2013 P-V Analysis Summary				
System Normal and Category B Contingencies	**Forecasted 2013 Winter Peak (MW)**	**105% Margin (MW)**	**Nose Point (MW)**	**Meets Voltage Criteria?**
Normal operation condition	1811	1902	2061	YES
240 kV 9L10 Brintnell 876S to Livock 939S	1811	1902	1921	YES
240 kV 9L57 Livock 939S to NW FMM South	1811	1902	1951	YES
240 kV 9L94 Dover 666S to NW FMM South	1811	1902	1941	YES
240 kV 9L960 Whitefish 825S to Deerland 13S	1811	1902	1941	YES
240 kV 971L Conklin 762S to Sunday Creek	1811	1902	1961	YES
Category C5 Contingencies	**Forecasted 2013 Winter Peak (MW)**	**102.5% Margin (MW)**	**Nose Point (MW)**	**Meets Voltage Criteria?**
9L08 9L09, Dover 888S to NW FMM North and Joslyn 849S Double Circuit 240 kV Lines	1811	1856	2021	YES
9L76 9L09, Joslyn 849S to NW FMM North and Dover 888S Double Circuit 240 kV Lines	1811	1856	2021	YES
9L01 9L58, Dover 888S to Ruth Lake 848S Double Circuit 240 kV Lines	1811	1856	2051	YES

3.2 Existing System Analysis – 2015

3.2.1 Power Flow Analysis

Power flow analysis, including the evaluation of system normal and single contingencies, was performed using the 2015 summer peak and winter peak load scenarios. The results show that there were no thermal violations. However, post transient voltage deviation criteria were violated at the assumed future connections in Southern load zone and Livock substations under the contingency of 240 kV line from Dover to the new NW FMM South Substation. This contingency will leave approximately 90 MW of load at these substations on the end of a long radial transmission line, where it is very difficult to maintain voltage. The results are

summarized in Table 3-3 and Table 3-4. The power flow diagrams of the Fort McMurray system are presented in Attachment C.

Table 3-3: Voltage Deviation Analysis Summary – 2015 Summer Peak

Contingencies	Substation	Voltage level (kV)	Pre-Contingency Voltage (P.U.)	Post transient Voltage (P.U.)	Post transient Voltage deviation	Meets Voltage Criteria?
9L57 Dover 888S to NW FMM South 240 kV line	NW FMM South	34.5	1.034	0.918	11.6%	No
	Germain	25	1.034	0.923	11.1%	No
	Deadman Creek	25	1.03	0.928	10.2%	No
	Saleski	25	1.037	0.915	12.2%	No

Table 3-4: Voltage Deviation Analysis Summary – 2015 Winter Peak

Contingencies	Substation	Voltage level (kV)	Pre-Contingency Voltage (P.U.)	Post transient Voltage (P.U.)	Post transient Voltage deviation	Meets Voltage Criteria?
9L57 Dover 888S to NW FMM South 240 kV line	NW FMM South	34.5	1.03	0.942	8.8%	Yes
	Germain	25	1.031	0.952	7.9%	Yes
	Deadman Creek	25	1.033	0.950	8.3%	Yes
	Saleski	25	1.034	0.957	7.7%	Yes

3.2.2 Voltage Stability Analysis

Voltage stability analysis was performed for system normal condition (Category A), single contingencies (Category B) and selected double contingencies (Category C) using the 2015 summer peak and winter peak scenarios to determine the existing system reactive margin and maximum operating load limits. The bus voltages in FMM area were monitored during the FMM area load increase.

The forecasted FMM area 2015 summer peak and winter peak load were 1928 MW and 2074 MW respectively. The Reliability Criteria requires a minimum of 5% operating margin for system normal condition (Category A) and for single contingencies (Category B). A minimum of 2.5% operating margin is required for Category C contingencies (N-2). The operating limit for each critical contingency was compared to the forecasted 2015 system load level to determine whether the voltage stability criteria were met.

The results of the voltage stability analysis are summarized in Table 3-5 and Table 3-6. The results showed that the forecasted 2015 system load level did not exceed the maximum allowed operating load limit and thus satisfied the voltage stability criteria. The P-V plots are presented in Attachment D.

Table 3-5: P-V Analysis Summary – 2015 Summer Peak

2015 P-V Analysis Summary				
System Normal and Category B Contingencies	**Forecasted 2015 Summer Peak (MW)**	**105% Margin (MW)**	**Nose Point (MW)**	**Meets Voltage Criteria?**
Base Case	1928	2024	2308	YES
240 kV 971L Conklin 762S to Sunday Creek	1928	2024	2148	YES
240 kV Kinosis 856S to Leismer 72S	1928	2024	2148	YES
240 kV 9L930 Whitefish 825S to Leismer 72S	1928	2024	2168	YES
240 kV 9L74 Dover 888S to NW FMM South Substation	1928	2024	2198	YES
240 kV Roundhill 1049S to Heart Lake 898S	1928	2024	2188	YES
Category C5 Contingencies	**Forecasted 2015 Summer Peak (MW)**	**102.5% Margin (MW)**	**Maximum Operating Limit (MW)**	**Meets Voltage Criteria?**
9L08 9L09, Dover 888S to NW FMM North and Joslyn 849S Double Circuit 240 kV Lines	1928	1976	2138	YES
9L76 9L09, Joslyn 849S to NW FMM North and Dover 888S Double Circuit 240 kV Lines	1928	1976	2288	YES
9L01 9L58, Dover 888S to Ruth Lake 848S Double Circuit 240 kV Lines	1928	1976	2298	YES

Table 3-6: P-V Analysis Summary – 2015 Winter Peak

2015 P-V Analysis Summary				
System Normal and Category B Contingencies	**Forecasted 2015 Winter Peak (MW)**	**105% Margin (MW)**	**Nose Point (MW)**	**Meets Voltage Criteria?**
Base Case	2074	2178	2474	YES
240 kV 971L Conklin 762S to Sunday Creek	2074	2178	2284	YES
240 kV Kinosis 856S to Leismer 72S	2074	2178	2314	YES
240 kV 9L930 Whitefish 825S to Leismer 72S	2074	2178	2344	YES
240 kV 9L57 Livock 939S to NW FMM South	2074	2178	2344	YES
240 kV Roundhill 1049S to Heart Lake	2074	2178	2374	YES
Category C5 Contingencies	**Forecasted 2015 Winter Peak (MW)**	**102.5% Margin (MW)**	**Maximum Operating Limit (MW)**	**Meets Voltage Criteria?**
9L08 9L09, Dover 888S to NW FMM North and Joslyn 849S Double Circuit 240 kV Lines	2074	2126	2234	YES
9L76 9L09, Joslyn 849S to NW FMM North and Dover 888S Double Circuit 240 kV Lines	2074	2126	2414	YES
9L01 9L58, Dover 888S to Ruth Lake 848S Double	2074	2126	2454	YES

Circuit 240 kV Lines				

3.3 Summary and Conclusions of the Need Assessment Studies

Power flow and voltage stability analyses were performed for system normal condition (Category A) and single contingencies (Category B) to identify existing system constraints in FMM area and near the proposed NW FMM study area. Based on existing system analysis, the transmission system in the study area has sufficient capacity to serve existing load and generation prior to connection of any new load in the NW FMM Area in 2013. There is no thermal and voltage violation observed in the study area in 2013 prior to connection of loads forecasted in the NW FMM Area. However post transient voltage deviation criteria was violated at the FMM 144 kV system under the contingency of McMillan 885S 240/144 kV transformer or 144 kV line from Hangingstone 820S to Salt Creek 977S. The AESO is currently in the process of developing a transmission plan to address the voltage issue in that area. This issue is beyond the study area and will not be discussed and addressed in this report.

The system analysis was also performed with forecasted NW FMM Area loads connected to closest transmission facilities to test the transmission system performance, and assess the transmission capacity needed in 2015. As load grows in the NW FMM Area, the studies show that the study area will experience voltage deviation violation under Category B system conditions by 2015. Outage of 240 kV line from Dover substation to the South load zone will leave future Livock and NW FMM South substations on a long radial transmission line and result in post transient voltage deviation violation, due to the forecasted load growth in the area and an inadequate transmission connecting this area to the AIES.

In summary, the NW FMM Plan is needed to:

- Reliably supply forecasted load growth for the area.
- Provide access to a transmission system in a timely manner to serve planned large industrial customer connections in NW FMM area, where no transmission system exists.
- Resolve voltage reliability violation caused by the forecasted load growth in NW FMM area.

The proposed transmission development identified to meet these needs is discussed further below.

4. SYSTEM DEVELOPMENTS TO ADDRESS THE NEED

4.1 Transmission Development Considerations

In the previous section, the need assessment study results were presented and discussed, and the need for system developments in the study area was established. Transmission system development is required to: establish a reliable network in the NW FMM area to serve forecasted load, serve applied-for customer connection requests and resolve identified constraints on the existing system with load growth. In this section, transmission developments to meet the established needs are considered and the preferred transmission system development plan is identified.

In consideration of the need to serve customer connections as early as 2013, the geographic location and size of these requested connections, the long term forecasted loads in the area, and the longer term oilsands development potential throughout the NW FMM Area, and in consideration that the NW FMM Area will experience voltage criteria violation under Category B system conditions as loads connect to the system as early as 2015, the AESO has identified the preferred option for development. The existing transmission system being far removed from several of the proposed connections – by approximately 50 km west of existing 240 kV double circuit 9L08/9L09 from Joslyn 849S to Dover 888S in the northern portion, and approximately 15 to 20 km from existing transmission facilities in the southern portion – significant expansion of the transmission network is required to connect these loads and establish a 240 kV bulk system in the area suitable to serve the long term load requirements of the area. The development for the NW FMM Area is proposed to include a 240 kV looped transmission system extending throughout the development area.

4.2 Preferred Transmission Development

The AESO proposes a 240 kV loop, running from a 240 kV switching substation referred to as NW FMM South, located south of existing Dover 888S on line 9L57, to a new switching substation referred to as NW FMM North, continuing east and terminating on existing 9L08 in an in-out configuration, as illustrated in Figure 4-1. After assessment, this was determined to be the only viable alternative for initial development into the NW FMM Area.

NW FMM North and South substations are to be located in the vicinity of the requested customer connections and actual siting will be determined by the TFO. Both new substations are expected to be in-service by Q3 2013. It is planned that the 240 kV loop will be closed from new NW FMM South to NW FMM North with a 240 kV double circuit one side strung by no later than Q2, 2015. This loop will encompass prospective oilsands development areas and provide access to the bulk 240 kV network for the future oilsands operations as they develop. Actual routing of proposed 240kV transmission lines will be determined by the TFO. The completion of the planned loop also resolves the identified voltage criteria violation mentioned in section 3.

4.3 Development Sequence

Given the size of the proposed development, it is necessary to plan for construction to occur over multiple construction seasons, spanning 2013 to 2015. In order to meet customer requested in-service dates, those components of the development necessary to connect customers in a timely manner will be given priority. For the purposes of this study, it was assumed that the proposed developments would be implemented as follows:

For Q3 2013:

- Construct a new 240 kV switching substation NW FMM South near the existing 9L57 south of existing Dover 888S. Open existing 9L57 and terminate at new NW FMM South with an in/out configuration, using 2x795 kcmil conductor (with summer and winter ratings of approximately 753 MVA and 966 MVA).
- Construct a new 240 kV switching substation NW FMM North west of 9L08/9L09. Open the existing Joslyn – Dover 240 kV 9L08 and construct approximately 50 km of new 240 kV double circuit transmission line from the existing 9L08 to the new NW FMM North, using 2x795 kcmil conductor (with summer and winter ratings of approximately 753 MVA and 966 MVA).

For Q2 2015

- Construct approximately 80 km 240 kV double circuit with one side strung from the new NW FMM South north to the new NW FMM North, using 2x795 kcmil conductor (with summer and winter ratings of approximately 753 MVA and 966 MVA).

Figure 4-1: The Preferred NW FMM Transmission Development

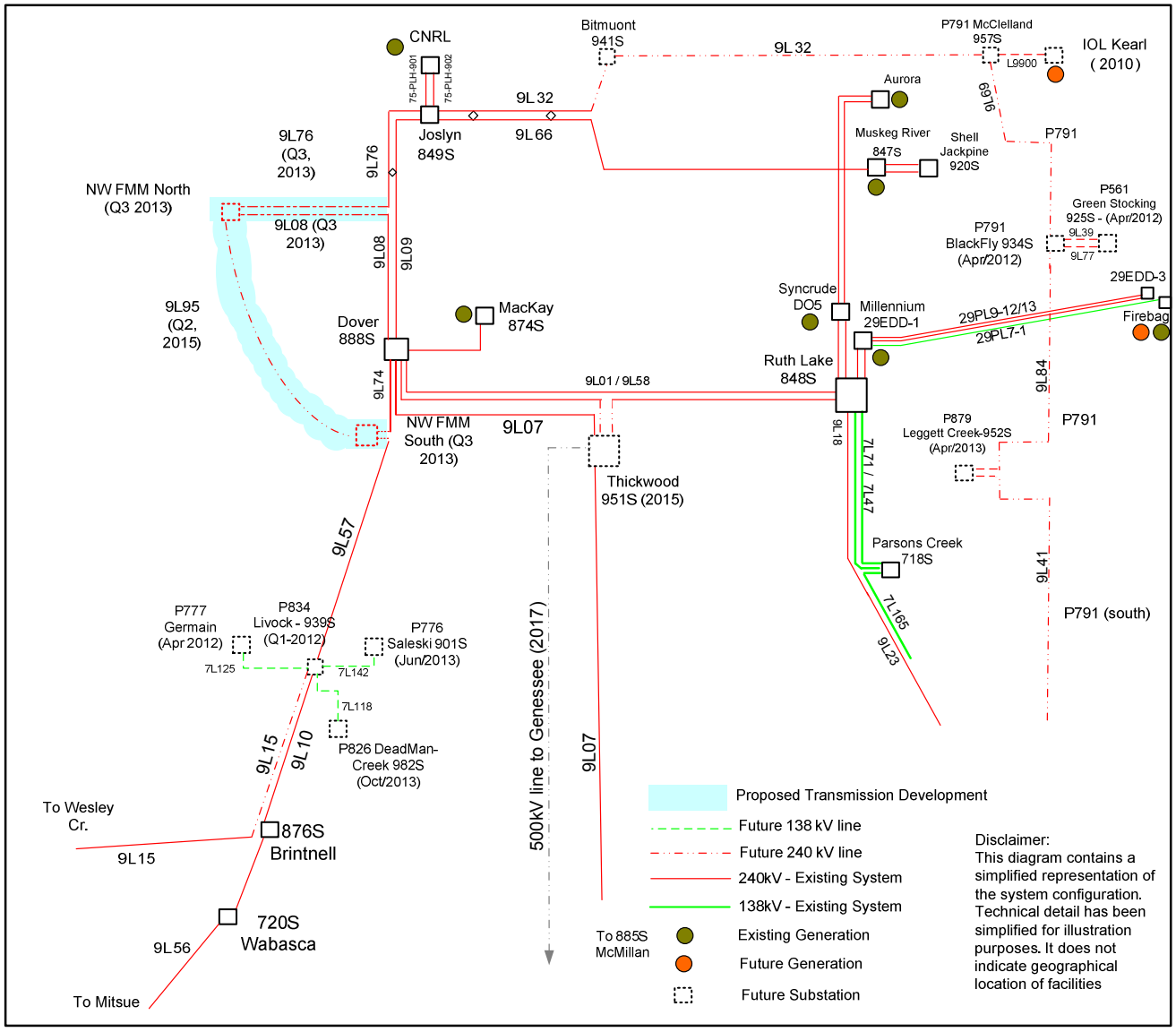

5. TRANSMISSION DEVELOPMENT PLAN – NEAR-TERM ASSESSMENT

As discussed in Section 4, a transmission plan to address the identified need been developed. The proposed transmission plan (NW FMM Plan) is meant to meet forecasted load, provide access to customer connections and alleviate all transmission constraints in the study area, which were identified in the need assessment.

This section describes the studies undertaken to confirm that system performance following completion of the NW FMM Plan conforms to the Reliability Criteria and Alberta Reliability Standards for the near term assessment (2013, 2014 and 2015). It is demonstrated that all identified constraints in the study area are alleviated following the proposed transmission plan.

A summary of the study results for the critical system constraints is presented. Attachments E and F provides detail results for the reported critical contingencies.

5.1 Power Flow Analysis

The steady state performance of the system under system normal conditions (Category A) and for single contingency (Category B) conditions was assessed using 2013, 2014 and 2015 summer and winter peak conditions with the proposed NW FMM Plan components in service according to the development sequence provided in section 4.3. 2015 light load condition was also examined to ensure that the system can be operated within maximum voltage under light load conditions.

The results show that the proposed NW FMM Plan has sufficient capacity to accommodate load growth in the study area in short term. It will not cause high voltage under light load conditions in the study area. The results of the steady state analysis are illustrated by the plots in Attachment E.

5.1.1 System Normal (N-0) Results

The results of the steady state analysis under N-0 conditions are summarized below.

2013 Summer and Winter Peak (assuming 2013 components of Plan in-service)

No overloads or voltage violations were observed for the 2013 SP and WP conditions after connection of forecasted loads.

2014 Summer and Winter Peak (assuming 2013 components of Plan in-service)

No overloads or voltage violations were observed for the 2014 SP and WP conditions under forecasted loading.

2015 Summer and Winter Peak (assuming complete NW FMM Plan in-service)

No overloads or voltage violations were observed for the 2015 SP and WP conditions following completion of the NW FMM Plan and the connection of the forecasted loads.

2015 Light load (assuming complete NW FMM Plan in-service)

No overloads or voltage violations were observed for the 2015 light load condition with the NW FMM Plan in place, and the connection of the forecasted loads.

5.1.2 Single Element Contingency (N-1) Results

The results of the steady state analysis under N-1 conditions are summarized below.

2013 Summer and Winter Peak (assuming 2013 components of Plan in-service)

No overloads or voltage violations were observed for the 2013 SP and WP condition under forecasted loading.

2014 Summer and Winter Peak (assuming 2013 components of Plan in-service)

No overloads or voltage violations were observed for the 2014 SP and WP condition under forecasted loading.

2015 Summer and Winter Peak (assuming complete NW FMM Plan in-service)

No overloads or voltage violations were observed for the 2015 SP and WP condition under forecasted loading.

2015 Light load (assuming complete NW FMM Plan in-service)

No overloads or voltage violations were observed for the 2015 light load condition following completion of the NW FMM Plan under forecasted loading.

5.2 Voltage Stability (P-V) Analysis

The PV analysis was completed on the proposed NW FMM Plan for study years 2013, 2014 and 2015. The PV stability results for N-0, N-1, and selected N-2 contingencies are given in Table 5-2 to Table 5-6. Voltage stability analysis was performed using the summer peak and winter peak scenarios to determine the existing system reactive margin and maximum operating load limits.

AESO Transmission Reliability Criteria requires a minimum of 5% operating margin for system normal conditions (Category A) and for single contingencies (Category B). A minimum of 2.5% operating margin is required for Category C contingency (N-2). The operating limit for each critical contingency was compared to the forecasted system load level to determine whether the voltage stability criteria were met.

The results confirm that after implementation of the NW FMM plan the system meets the voltage stability criteria. Detailed plots are given in Attachment F.

Table 5-1: P-V Analysis Summary – 2013 Summer Peak

2013 P-V Analysis Summary				
System Normal and Category B Contingencies	**Forecasted 2013 Summer Peak (MW)**	**105% Margin (MW)**	**Nose Point (MW)**	**Meets Voltage Criteria?**
Normal operation condition	1643	1725	2053	YES
240 kV 9L10 Brintnell 876S to Livock 939S	1643	1725	1943	YES
Losing Muskeg Generation	1643	1725	1963	YES
240 kV 9L57 Livock 939S to NW FMM South	1643	1725	1963	YES
240 kV 9L94 Dover 666S to NW FMM South	1643	1725	2043	YES
240 kV 9L960 Whitefish 825S to DeerLand 13S	1643	1725	1983	YES
240 kV 971L Conklin 762S to Sunday Creek	1643	1725	1973	YES
Category C5 Contingencies	**Forecasted 2013 Summer Peak (MW)**	**102.5% Margin (MW)**	**Nose Point (MW)**	**Meets Voltage Criteria?**
9L08 9L09, Dover 888S to NW FMM North and Joslyn 849S Double Circuit 240 kV Lines	1643	1684	2033	YES
9L76 9L09, Joslyn 849S to NW FMM North and Dover 888S Double Circuit 240 kV Lines	1643	1684	2003	YES
9L01 9L58, Dover 888S to Ruth Lake 848S Double Circuit 240 kV Lines	1643	1684	2043	YES

Table 5-2: P-V Analysis Summary – 2013 Winter Peak

2013 P-V Analysis Summary				
System Normal and Category B Contingencies	**Forecasted 2013 Winter Peak (MW)**	**105% Margin (MW)**	**Nose Point (MW)**	**Meets Voltage Criteria?**
Normal operation condition	1811	1902	2091	YES
240 kV 9L10 Brintnell 876S to Livock 939S	1811	1902	1931	YES
240 kV 9L57 Livock 939S to NW FMM South	1811	1902	1961	YES
240 kV 9L94 Dover 666S to NW FMM South	1811	1902	1971	YES
240 kV 9L960 Whitefish 825S to Deerland 13S	1811	1902	1971	YES
240 kV 971L Conklin 762S to Sunday Creek	1811	1902	1991	YES
Category C5 Contingencies	**Forecasted 2013 Winter Peak (MW)**	**102.5% Margin (MW)**	**Nose Point (MW)**	**Meets Voltage Criteria?**
9L08 9L09, Dover 888S to NW FMM North and Joslyn 849S Double Circuit 240 kV Lines	1811	1856	2041	YES
9L76 9L09, Joslyn 849S to NW FMM North and Dover 888S Double Circuit 240 kV Lines	1811	1856	2061	YES
9L01 9L58, Dover 888S to Ruth Lake 848S Double Circuit 240 kV Lines	1811	1856	2091	YES

Table 5-3: P-V Analysis Summary – 2014 Summer Peak

2014 P-V Analysis Summary				
System Normal and Category B Contingencies	**Forecasted 2014 Summer Peak (MW)**	**105% Margin (MW)**	**Nose Point (MW)**	**Meets Voltage Criteria?**
Normal operation condition	1795	1885	2325	YES
240 kV Kinosis 856S to Leismer 72S	1795	1885	2185	YES
Losing Muskeg Generation	1795	1885	2205	YES
240 kV 971L Conklin 762S to Sunday Creek	1795	1885	2205	YES
240 kV 9L10 Brintnell 876S to Livock 939S	1795	1885	2235	YES
240 kV 9L57 Livock 939S to NW FMM South	1795	1885	2265	YES
240 kV 9L930 Whitefish 825S to Leismer 72S	1795	1885	2225	YES
Category C5 Contingencies	**Forecasted 2014 Summer Peak (MW)**	**102.5% Margin (MW)**	**Nose Point (MW)**	**Meets Voltage Criteria?**
9L08 9L09, Dover 888S to NW FMM North and Joslyn 849S Double Circuit 240 kV Lines	1795	1840	2165	YES
9L76 9L09, Joslyn 849S to NW FMM North and Dover 888S Double Circuit 240 kV Lines	1795	1840	2255	YES
9L01 9L58, Dover 888S to Ruth Lake 848S Double Circuit 240 kV Lines	1795	1840	2285	YES

Table 5-4: P-V Analysis Summary – 2014 Winter Peak

2014 P-V Analysis Summary				
System Normal and Category B Contingencies	**Forecasted 2014 Winter Peak (MW)**	**105% Margin (MW)**	**Nose Point (MW)**	**Meets Voltage Criteria?**
Normal operation condition	1942	2039	2412	YES
240 kV Kinosis 856S to Leismer 72S	1942	2039	2272	YES
240 kV 971L Conklin 762S to Sunday Creek	1942	2039	2272	YES
240 kV 9L10 Brintnell 876S to Livock 939S	1942	2039	2292	YES
240 kV 9L57 Livock 939S to NW FMM South	1942	2039	2312	YES
240 kV 9L930 Whitefish 825S to Leismer 72S	1942	2039	2312	YES
Category C5 Contingencies	**Forecasted 2014 Winter Peak (MW)**	**102.5% Margin (MW)**	**Nose Point (MW)**	**Meets Voltage Criteria?**
9L08 9L09, Dover 888S to NW FMM North and Joslyn 849S Double Circuit 240 kV Lines	1942	1991	2272	YES
9L76 9L09, Joslyn 849S to NW FMM North and Dover 888S Double Circuit 240 kV Lines	1942	1991	2352	YES
9L01 9L58, Dover 888S to Ruth Lake 848S Double Circuit 240 kV Lines	1942	1991	2402	YES

Table 5-5: P-V Analysis Summary – 2015 Summer Peak

2015 P-V Analysis Summary				
System Normal and Category B Contingencies	**Forecasted 2015 Summer Peak (MW)**	**105% Margin (MW)**	**Nose Point (MW)**	**Meets Voltage Criteria?**
Base Case	1928	2024	2248	YES
240 kV 971L Livock 939S to Wesley Creek 834S	1928	2024	2048	YES
240 kV 971L Conklin 762S to Sunday Creek	1928	2024	2078	YES
240 kV Kinosis 856S to Leismer 72S	1928	2024	2078	YES
240 kV 9L930 Whitefish 825S to Leismer 72S	1928	2024	2098	YES
240 kV 9L57 Livock 939S to NW FMM South	1928	2024	2188	YES
240 kV Roundhill 1049S to Heart Lake 898S	1928	2024	2128	YES
Category C5 Contingencies	**Forecasted 2015 Summer Peak (MW)**	**102.5% Margin (MW)**	**Maximum Operating Limit (MW)**	**Meets Voltage Criteria?**
9L08 9L09, Dover 888S to NW FMM North and Joslyn 849S Double Circuit 240 kV Lines	1928	1976	2218	YES
9L76 9L09, Joslyn 849S to NW FMM North and Dover 888S Double Circuit 240 kV Lines	1928	1976	2228	YES
9L01 9L58, Dover 888S to Ruth Lake 848S Double Circuit 240 kV Lines	1928	1976	2228	YES

Table 5-6: P-V Analysis Summary – 2015 Winter Peak

2015 P-V Analysis Summary				
System Normal and Category B Contingencies	**Forecasted 2015 Winter Peak (MW)**	**105% Margin (MW)**	**Nose Point (MW)**	**Meets Voltage Criteria?**
Base Case	2074	2178	2484	YES
240 kV 971L Conklin 762S to Sunday Creek	2074	2178	2294	YES
240 kV Kinosis 856S to Leismer 72S	2074	2178	2334	YES
240 kV 9L930 Whitefish 825S to Leismer 72S	2074	2178	2344	YES
240 kV 9L57 Livock 939S to NW FMM South	2074	2178	2354	YES
240 kV Roundhill 1049S to Heart Lake 898S	2074	2178	2384	YES
Category C5 Contingencies	**Forecasted 2015 Winter Peak (MW)**	**102.5% Margin (MW)**	**Maximum Operating Limit (MW)**	**Meets Voltage Criteria?**
9L08 9L09, Dover 888S to NW FMM North and Joslyn 849S Double Circuit 240 kV Lines	2074	2126	2344	YES
9L76 9L09, Joslyn 849S to NW FMM North and Dover 888S Double Circuit 240 kV Lines	2074	2126	2424	YES
9L01 9L58, Dover 888S to Ruth Lake 848S Double Circuit 240 kV Lines	2074	2126	2474	YES

5.3 Short Circuit Analysis

Short circuits analysis was performed using the 2013 and 2015 scenarios to determine the maximum and minimum fault levels in the system after the energization of NW FMM Plan. Both three phase and single-line-to-ground fault currents were calculated. The results of the short circuit study are presented in Attachment I[5].

5.4 Summary and Conclusion

Detailed studies were performed on the proposed NM FMM Plan for the near term (2013, 2014 and 2015). Power flow and voltage stability analysis were performed for Category A, Category B, and selected Category C conditions to ensure compliance with the Reliability Criteria and the Alberta Reliability Standards. Maximum and minimum short circuit levels were calculated.

Detailed study results confirm both during the development of the NW FMM Plan over the 2013 to 2015 timeframe, and following completion of the NW FMM Plan, the system meets the Reliability Criteria and the Alberta Reliability standards.

[5] Short circuit current calculation is based on modeling information provided to the AESO by third parties. Short circuit estimation is subject to change. The information provided in this study is not intended to be used as the sole source of information for electrical equipment specification and the design of public or worker safety-grounding systems.

6. TRANSMISSION DEVELOPMENT PLAN – LONG-TERM ASSESSMENT

Section 5 shows that the NW FMM plan is fully compliant with the Reliability Criteria and the Alberta Reliability Standards in the near term (2013, 2014 and 2015). A long term assessment (2020) was also performed, assuming forecasted area load growth. This section summarizes the study results of the long term assessment. Attachments G to H provide detailed results for the reported critical contingencies.

6.1 Power Flow Analysis

The steady state performance of the system under system normal conditions (Category A) and single contingency (Category B) conditions was assessed using 2020 summer and winter peak conditions with the proposed NW FMM Plan configuration. 2020 light load conditions were also examined to ensure that the system can be operated within maximum voltage under light load conditions.

The results show that the proposed NW FMM Plan provides sufficient capacity to accommodate load growth in the study area in the long term. High voltages are not identified under light load condition in the study area. The results of the power flow analysis are illustrated by the plots in Attachment G.

6.1.1 System Normal (N-0) Results

The results of the power flow analysis under N-0 conditions are summarized below.

2020 Summer and Winter Peak

No overloads or voltage violations were observed for the 2020 SP and WP conditions with the NW FMM Plan in place under forecasted loading.

2020 Light load

No overloads or voltage issues were observed for the 2020 light load condition with the NW FMM Plan in place under forecasted loading.

6.1.2 Single Element Contingency (N-1) Results

The results of the steady state analysis under N-1 conditions are summarized below.

2020 Summer and Winter Peak

No overloads or voltage violations were observed for the 2020 SP and WP conditions with the NW Plan in place under forecasted loading.

2020 Light load

No overloads or voltage violations were observed for the 2020 light load condition with the NW FMM Plan in place under forecasted loading.

6.2 Voltage Stability (P-V) Analysis

The PV analysis was completed to determine the system voltage stability margin with the proposed NW FMM Plan in-service in 2020. The PV stability results for N-0, N-1, and selected N-2 contingencies are given in Table 6-1 and Table 6-2. The forecasted 2020 FMM area summer peak and winter peak loads are 2685 MW and 2782 MW respectively. The AESO Transmission Reliability Criteria requires a minimum of 5% operating margin for system normal conditions (Category A) and for single contingencies (Category B). A minimum of 2.5% operating margin is required for Category C contingencies (N-2). The operating limit for each critical contingency was compared to the forecasted system load level to determine whether the voltage stability criteria were met. The results confirm that after implementation of the NW FMM Plan the system meets the voltage stability criteria. Detailed plots are given in Attachment H.

As previously noted, the voltage collapses at FMM 144 kV system under the contingency of McMillan 240/144 kV transformer or Salt Creek 240/144 kV transformer are a previously identified issue that is beyond the study area and therefore beyond the scope of this report.

Table 6-1: P-V Analysis Summary – 2020 Summer Peak

2020 P-V Analysis Summary				
System Normal and Category B Contingencies	**Forecasted 2020 Summer Peak (MW)**	**105% Margin (MW)**	**Nose Point (MW)**	**Meets Voltage Criteria?**
Normal operation condition	2685	2819	3355	YES
Salt Creek 240/144 kV transformer	2685	2819	Voltage Collapse	NO
500 kV Thickwood 951S to Genesee	2685	2819	3165	YES
9L66 Muskeg River 847S to Joslyn 849S	2685	2819	3195	YES
240 kV 971L Conklin 762S to Sunday Creek	2685	2819	3245	YES
240 kV Kinosis 856S to Leismer 72S	2685	2819	3275	YES
Category C5 Contingencies	**Forecasted 2020 Summer Peak (MW)**	**102.5% Margin (MW)**	**Nose Point (MW)**	**Meets Voltage Criteria?**
9L08 9L09, Dover 888S to NW FMM North and Joslyn 849S Double Circuit 240 kV Lines	2685	2752	3235	YES
9L76 9L09, Joslyn 849S to NW FMM North and Dover 888S Double Circuit 240 kV Lines	2685	2752	3165	YES
9L01 9L58, Dover 888S to Ruth Lake 848S Double Circuit 240 kV Lines	2685	2752	3335	YES

Table 6-2: P-V Analysis Summary – 2020 Winter Peak

2020 P-V Analysis Summary				
System Normal and Category B Contingencies	**Forecasted 2020 Winter Peak (MW)**	**105% Margin (MW)**	**Nose Point (MW)**	**Meets Voltage Criteria?**
Normal operation condition	2782	2921	3472	YES
Salt Creek 240/144 kV transformer	2782	2921	Voltage Collapse	NO
500 kV Thickwood 951S to Genesee	2782	2921	3202	YES
9L66 Muskeg River 847S to Joslyn 849S	2782	2921	3312	YES
240 kV 971L Conklin 762S to Sunday Creek	2782	2921	3332	YES
240 kV Kinosis 856S to Leismer 72S	2782	2921	3402	YES
Category C5 Contingencies	**Forecasted 2020 Winter Peak (MW)**	**102.5% Margin (MW)**	**Nose Point (MW)**	**Meets Voltage Criteria?**
9L08 9L09, Dover 888S to NW FMM North and Joslyn 849S Double Circuit 240 kV Lines	2782	2852	3352	YES
9L76 9L09, Joslyn 849S to NW FMM North and Dover 888S Double Circuit 240 kV Lines	2782	2852	3252	YES
9L01 9L58, Dover 888S to Ruth Lake 848S Double Circuit 240 kV Lines	2782	2852	3442	YES

6.3 Short Circuit Analysis

Short circuit analysis was performed using the 2020 scenarios to determine the maximum and minimum fault levels in the system after the energization of NW FMM Plan. Both three phase and single-line-to-ground fault currents were calculated. The results of the short circuit study are given in Attachment I[6].

6.4 Dynamic Stability Analysis

A comprehensive dynamic stability study was performed on the 2020 system. Bus voltages, bus frequencies, generator real power, and generator angles were monitored. Category B and following Category C faults were simulated.

Category C3 faults are defined as a three phase fault with normal clearing time and manual system adjustment, followed by another three phase fault with normal clearing time.

[6] Short circuit current calculation is based on modeling information provided to the AESO by third parties. Short circuit estimation is subject to change. The information provided in this study is not intended to be used as the sole source of information for electrical equipment specification and the design of public or worker safety-grounding systems.

Category C5 faults are defined as double line-to-ground faults of a double circuited transmission tower with normal clearing time.

Category C8 faults are defined as single line-to-ground faults of transmission lines with delayed clearing time (stuck breaker condition).

The results confirm that the system remains stable for Category B and Selected Category C contingencies in the study area. Study results of the stability analysis for critical contingencies are given in Attachment J.

6.5 Summary and Conclusions

Detailed studies were performed on the proposed NM FMM Plan for the long term (2020). Power flow, voltage stability and transient stability analysis were performed for Category A, Category B, and selected Category C conditions to ensure compliance with the Reliability Criteria and the Alberta Reliability Standards. Maximum and minimum short circuit levels were calculated.

Detailed study results confirm that following implementation of the NW FMM plan the system meets the Reliability Criteria for the long term.

7. ACCELERATED LOAD GROWTH SENSITIVITY ANALYSIS

The purpose of the sensitivity analysis is to test the future performance of the transmission system under higher than forecast loading conditions. Since the NW FMM Area is part of the Northeast region containing significant oilsands development potential, there is uncertainty as to how quickly and where exactly loads associated with increasing oilsands production will materialize, especially in the longer term. Therefore a load forecast sensitivity was developed to capture long term potential growth in the area in consideration of developers technology choices, technology advancements and other factors. Such a study helps to assess the performance of the proposed NW FMM Plan and if necessary assess options to expand the plan should that be required. The sensitivity serves to address the potential scenario where load grows at a higher rate than forecast to 2020. It can also serve as a proxy for assessing system performance after 2020, assuming load grows under forecasted load growth.

This sensitivity reflects the latest oilsands project information as of March 2011 and DFO information. Additionally, this scenario reflects an evaluation of the area looking at existing oilsands leases, geological formation type, existing extraction technology and potential new technology, and evaluations of the companies currently involved in the area. It indicates that load in NW FMM area could reach 450 MW by 2020. Details regarding this sensitivity can be found in the separately prepared *Northwest Fort McMurray System Planning Study – Load and Generation Forecasts* Report

The sensitivity analysis was conducted to investigate whether the proposed plan is adequate to support higher than forecasted load growth by 2020. Power flow and voltage stability analysis of the system under system normal condition (Category A) and for single contingency (Category B) conditions were assessed.

7.1 Power Flow Analysis

7.1.1 System Normal (N-0) Results

No overloads or voltage violations were observed for the 2020 accelerated load growth sensitivity, with NW FMM Plan in place.

7.1.2 Single Element Contingency (N-1) Results

No overloads or voltage violations were observed for the 2020 accelerated load growth sensitivity with NW FMM Plan in place.

7.2 Voltage Stability (P-V) Analysis

The PV stability results for N-0, N-1, and selected N-2 contingencies are given in Table 7-1. The results confirm that after implementation of the NW FMM Plan the system meets the voltage stability criteria. As mentioned in Section 7, the loss of McMillan 240/144 kV transformer or Salt Creek 240/144 kV transformer will cause voltage to collapse at FMM 144 kV system; however this is beyond the study area and therefore outside of the scope of this assessment.

Table 7-1: P-V Analysis Summary – 2020 Sensitivity

2020 P-V Analysis Summary				
System Normal and Category B Contingencies	**2020 Maximum Forecasted load (MW)**	**105% Margin (MW)**	**Nose Point (MW)**	**Meets Voltage Criteria?**
Normal operation condition	2782	2921	3482	YES
Salt Creek 240/144 kV transformer	2782	2921	Voltage Collapse	NO
500 kV Thickwood 951S to Genesee	2782	2921	3212	YES
9L66 Muskeg River 847S to Joslyn 849S	2782	2921	3332	YES
240 kV 971L Conklin 762S to Sunday Creek	2782	2921	3372	YES
240 kV Kinosis 856S to Leismer 72S	2782	2921	3422	YES
Category C5 Contingencies	**Maximum Load (MW)**	**102.5% Margin (MW)**	**Nose Point (MW)**	**Meets Voltage Criteria?**
9L08 9L09, Dover 888S to NW FMM North and Joslyn 849S Double Circuit 240 kV Lines	2782	2852	3352	YES
9L76 9L09, Joslyn 849S to NW FMM North and Dover 888S Double Circuit 240 kV Lines	2782	2852	3342	YES
9L01 9L58, Dover 888S to Ruth Lake 848S Double Circuit 240 kV Lines	2782	2852	3452	YES

7.3 Summary

The results show that the proposed NW FMM transmission development has sufficient capacity to accommodate future potential load growth in the study area of up to at least 450 MW, whether that load growth occurs prior to 2020, or sometime after. The results of the power flow and voltage stability analysis are illustrated by the plots in Attachment K.

8. PROJECT INTERDEPENDANCIES

The proposed Northwest Fort McMurray 240kV transmission development will facilitate the connection of a number of customers in NW FMM Area beginning as early as Q3, 2013. The development of those components of the Plan to facilitate the requested connections is required as early as Q3, 2013. While loading has been assumed for these customer connections as part of the studies undertaken in this report, separate needs identification documents will be developed and submitted separately for each connection, and these applications will contain specific connection studies to assess the impact of the connection on the transmission system. Other connections within the area will be assessed, planned and applied for as they are received.

The studies performed and presented in this engineering report assumed that a number of system reinforcements including, the development of Thickwood 240kV system substation and associated VARs, the 500kV line connecting Thickwood and Genesee and the additional VAR compensation in the FMM area. Absence of any of these transmission reinforcements may change the performance of the transmission network in the FMM area.

9. SUMMARY AND CONCLUSIONS

Currently, there are no transmission facilities in the NW FMM Area. However, the AESO forecasts that the load in this area is expected to grow to 366 MW by 2020. Under accelerated load growth sensitivity, load in the NW FMM area has the potential to increase to 450 MW by 2020. Several large scale Steam Assisted Gravity Drainage (SAG-D) and Thermal Assisted Gravity Drainage (TAGD) facilities are being proposed for in-situ bitumen extraction in the area, along with associated processing and pumping facilities. The AESO has received requests for connection to the AIES in the area for as early as Q3, 2013.

Requested connections in the NW FMM area are as far as 50 km from the existing transmission system in the FMM area. Expansion of the transmission network is required to establish a network for these and future customers to connect.

The AESO assessed the capacity of the existing transmission system near the NW FMM Study Area, considering AESO projections for load and generation growth in the area. The need assessment study results demonstrate that the study area will experience voltage violation with forecasted load growth and requested connections in 2015.

In order to meet forecasted load and provide reliable transmission access to the proposed loads and future potential customer connections in the NW FMM Area, the AESO determined that the only viable option to meet the identified need is to develop a 240kV loop extending through the NW FMM Area. Due to the size of the development and the requirement to connect in a timely manner, it is assumed that the portions of the development necessary to connect customers will be constructed first, followed by the remainder of the development. This will likely occur over multiple construction seasons.

For the purposes of system planning, it was assumed that the NW FMM Plan would be developed as follows:

For Q3 2013:

- Construct a new 240 kV switching substation NW FMM South near the existing 9L57 south of existing Dover 888S. Open existing 9L57 and terminate at new NW FMM South with an in/out configuration, using 2x795 kcmil conductor (with summer and winter ratings of approximately 753 MVA and 966 MVA).
- Construct a new 240 kV switching substation NW FMM North west of 9L08/9L09. Open the existing Joslyn – Dover 240 kV 9L08 and construct approximately 50 km of new 240 kV double circuit transmission line from the existing 9L08 to the new NW FMM North, using 2x795 kcmil conductor (with summer and winter ratings of approximately 753 MVA and 966 MVA).

For Q2 2015

- Construct approximately 80 km 240 kV double circuit with one side strung from the new NW FMM South north to the new NW FMM North, using 2x795 kcmil conductor (with summer and winter ratings of approximately 753 MVA and 966 MVA).

Detailed studies were performed on the proposed NW FMM plan for near-term (2013, 2014 and 2015) and long-term (2020) to ensure compliance with the Reliability Criteria and the Alberta Reliability Standards. Transient stability analysis, power flow, voltage stability analysis, and short-circuit studies were conducted for system normal condition (Category A), single contingencies (Category B) and selected Category C contingencies.

The study results indicate that the proposed NW FMM Plan will accommodate forecasted load growth and facilitate the reliable connections of requested connections in the NW FMM Area and support long term development within an area containing significant oil sands resources. The AESO Reliability Criteria and the Alberta Reliability Standards will be met following completion of the NW FMM Plan. The Plan has been designed to offer the flexibility of expansion, including the ability to string the second side of the 240 kV segment between NW FMM North and NW FMM south, as load in the area grows over the long term.

ATTACHMENT A
Generation Dispatch Tables

Table A-1: Generation Dispatch- 2013 Existing Cases

Generator Name	Fuel	WP Pgen (MW)	SP Pgen (MW)	PMAX (MW)	Area
Syncrude Aurora G1	Cogeneration	62.90	63.06	86	25
Syncrude Aurora G2	Cogeneration	60.60	60.76	82.1	25
Conklin GT1	Cogeneration	59.00	59.16	85	25
Conklin GT2	Cogeneration	59.00	60.36	85	25
Firebag 2	Cogeneration	61.36	61.52	93.6	25
Firebag 2	Cogeneration	61.36	61.52	93.6	25
Firebag 1	Cogeneration	69.80	69.98	86.8	25
Horizon Upgrader-STG1	Cogen Gas Turbine	13.04	13.07	15.9	25
Horizon Upgrader-GTG1	Cogen Steam Turbine	65.97	66.14	91.8	25
LONGLAKEG1	Cogeneration	60.36	60.52	80	25
LONGLAKEG2	Cogeneration	61.38	61.38	80	25
LONGLAKEGT3	Cogeneration	8.68	8.70	11.5	25
LONGLAKEGT4	Cogeneration	8.68	8.70	11.5	25
Millennium 3	Cogeneration	52.16	52.30	64	25
Millennium 4	Cogeneration	62.13	62.29	76	25
Millennium 5	Cogeneration	94.35	94.59	115.4	25
Millennium 6	Cogeneration	94.35	94.59	115.4	25
MuskegG1	Cogeneration	77.47	77.67	84.5	25
MuskegG2	Cogeneration	77.47	77.67	83.2	25
Suncor 2	Cogeneration	24.55	24.61	32	25
Suncor 1	Cogeneration	13.81	13.84	17.2	25
Syncrude G1	Cogeneration	36.82	36.91	50	25
Syncrude G2	Cogeneration	36.82	36.91	50	25
Syncrude G3	Cogeneration	20.00	16.15	22	25
Syncrude G4	Cogeneration	36.82	36.91	50	25
Syncrude G5	Cogeneration	20.00	16.92	22.5	25
Syncrude G6	Cogeneration	49.86	49.99	68	25
Syncrude-UE-1-G11	Cogeneration	19.94	20.00	27	25
Syncrude-UE-1-G12	Cogeneration	55.23	55.37	66.7	25

Table A-2: Generation Dispatch- 2013 Cases with NW FMM

Generator Name	Fuel	WP Pgen (MW)	SP Pgen (MW)	PMAX (MW)	Area
Syncrude Aurora G1	Cogeneration	62.90	63.06	86	25
Syncrude Aurora G2	Cogeneration	60.60	60.76	82.1	25
Conklin GT1	Cogeneration	59.00	59.16	85	25
Conklin GT2	Cogeneration	59.00	60.36	85	25
Firebag 2	Cogeneration	61.36	61.52	93.6	25
Firebag 2	Cogeneration	61.36	61.52	93.6	25
Firebag 1	Cogeneration	69.80	69.98	86.8	25

Generator Name	Fuel	WP Pgen (MW)	SP Pgen (MW)	PMAX (MW)	Area
Horizon Upgrader-STG1	Cogen Gas Turbine	13.04	13.07	15.9	25
Horizon Upgrader-GTG1	Cogen Steam Turbine	65.97	66.14	91.8	25
LONGLAKEG1	Cogeneration	60.36	60.52	80	25
LONGLAKEG2	Cogeneration	61.38	61.38	80	25
LONGLAKEGT3	Cogeneration	8.68	8.70	11.5	25
LONGLAKEGT4	Cogeneration	8.68	8.70	11.5	25
Millennium 3	Cogeneration	52.16	52.30	64	25
Millennium 4	Cogeneration	62.13	62.29	76	25
Millennium 5	Cogeneration	94.35	94.59	115.4	25
Millennium 6	Cogeneration	94.35	94.59	115.4	25
MuskegG1	Cogeneration	77.47	77.67	84.5	25
MuskegG2	Cogeneration	77.47	77.67	83.2	25
Suncor 2	Cogeneration	24.55	24.61	32	25
Suncor 1	Cogeneration	13.81	13.84	17.2	25
Syncrude G1	Cogeneration	36.82	36.91	50	25
Syncrude G2	Cogeneration	36.82	36.91	50	25
Syncrude G3	Cogeneration	20.00	16.15	22	25
Syncrude G4	Cogeneration	36.82	36.91	50	25
Syncrude G5	Cogeneration	20.00	16.92	22.5	25
Syncrude G6	Cogeneration	49.86	49.99	68	25
Syncrude-UE-1-G11	Cogeneration	19.94	20.00	27	25
Syncrude-UE-1-G12	Cogeneration	55.23	55.37	66.7	25

Table A-3: Generation Dispatch- 2014 Cases with NW FMM

Generator Name	Fuel	WP Pgen (MW)	SP Pgen (MW)	PMAX (MW)	Area
Syncrude Aurora G1	Cogeneration	63.1	63.2	86	25
Syncrude Aurora G2	Cogeneration	60.8	60.9	82.1	25
Conklin GT1	Cogeneration	73.7	72.2	85	25
Conklin GT2	Cogeneration	65.4	65.5	85	25
Firebag 2	Cogeneration	61.6	61.7	93.6	25
Firebag 2	Cogeneration	61.6	61.7	93.6	25
Firebag 1	Cogeneration	70.0	70.1	86.8	25
Horizon Upgrader-STG1	Cogen Gas Turbine	13.1	13.1	15.9	25
Horizon Upgrader-GTG1	Cogen Steam Turbine	66.2	66.3	91.8	25
LONGLAKEG1	Cogeneration	60.6	60.7	80	25
LONGLAKEG2	Cogeneration	60.6	60.7	80	25
LONGLAKEGT3	Cogeneration	8.7	8.7	11.5	25
LONGLAKEGT4	Cogeneration	8.7	8.7	11.5	25
Millennium 3	Cogeneration	52.3	52.4	64	25
Millennium 4	Cogeneration	94.7	62.4	115.4	25
Millennium 5	Cogeneration	94.7	94.8	115.4	25
Millennium 6	Cogeneration	77.7	94.8	84.5	25

Generator Name	Fuel	WP Pgen (MW)	SP Pgen (MW)	PMAX (MW)	Area
MuskegG1	Cogeneration	77.7	77.9	83.2	25
MuskegG2	Cogeneration	24.6	77.9	32	25
Suncor 2	Cogeneration	13.9	24.7	17.2	25
Suncor 1	Cogeneration	36.9	13.9	50	25
Syncrude G1	Cogeneration	36.9	37.0	50	25
Syncrude G2	Cogeneration	16.2	37.0	22	25
Syncrude G3	Cogeneration	36.9	16.2	50	25
Syncrude G4	Cogeneration	16.9	37.0	22.5	25
Syncrude G5	Cogeneration	50.0	17.0	68	25
Syncrude G6	Cogeneration	20.0	50.1	27	25
Syncrude-UE-1-G11	Cogeneration	55.4	19.2	66.7	25
Syncrude-UE-1-G12	Cogeneration	62.3	55.5	76	25
Meg Surmont	Cogeneration	65.4	77.1	85	25
Kearl 1	Cogeneration	77.0	61.7	100	25
Firebag 3	Cogeneration	61.6	61.7	93.6	25
Firebag 3	Cogeneration	61.6	65.5	86	25

Table A-4: Generation Dispatch- 2015 Existing Cases

Generator Name	Fuel	WP Pgen (MW)	SP Pgen (MW)	PMAX (MW)	Area
Syncrude Aurora G1	Cogeneration	63.1	63.2	86	25
Syncrude Aurora G2	Cogeneration	60.8	60.9	82.1	25
Conklin GT1	Cogeneration	75.0	70.9	85	25
Conklin GT2	Cogeneration	65.4	65.5	85	25
Firebag 2	Cogeneration	61.5	61.7	93.6	25
Firebag 2	Cogeneration	61.5	61.7	93.6	25
Firebag 1	Cogeneration	70.0	70.2	86.8	25
Horizon Upgrader-STG1	Cogen Gas Turbine	13.1	13.1	15.9	25
Horizon Upgrader-GTG1	Cogen Steam Turbine	66.2	66.3	91.8	25
LONGLAKEG1	Cogeneration	60.5	60.7	80	25
LONGLAKEG2	Cogeneration	60.5	60.7	80	25
LONGLAKEGT3	Cogeneration	8.7	8.7	11.5	25
LONGLAKEGT4	Cogeneration	8.7	8.7	11.5	25
Millennium 3	Cogeneration	52.3	52.4	64	25
Millennium 4	Cogeneration	62.3	62.5	115.4	25
Millennium 5	Cogeneration	94.6	94.8	115.4	25
Millennium 6	Cogeneration	94.6	94.8	84.5	25
MuskegG1	Cogeneration	77.7	77.9	83.2	25
MuskegG2	Cogeneration	77.7	77.9	32	25
Suncor 2	Cogeneration	24.6	24.7	17.2	25
Suncor 1	Cogeneration	13.8	13.9	50	25

Generator Name	Fuel	WP Pgen (MW)	SP Pgen (MW)	PMAX (MW)	Area
Syncrude G1	Cogeneration	36.9	37.0	50	25
Syncrude G2	Cogeneration	36.9	37.0	22	25
Syncrude G3	Cogeneration	16.2	16.2	50	25
Syncrude G4	Cogeneration	36.9	37.0	22.5	25
Syncrude G5	Cogeneration	16.9	17.0	68	25
Syncrude G6	Cogeneration	50.0	50.1	27	25
Syncrude-UE-1-G11	Cogeneration	19.9	20.0	66.7	25
Syncrude-UE-1-G12	Cogeneration	55.4	55.5	76	25
Meg Surmont	Cogeneration	76.9	77.1	85	25
Kearl 1	Cogeneration	61.5	61.7	100	25
Firebag 3	Cogeneration	61.5	61.7	93.6	25
Firebag 3	Cogeneration	65.4	65.5	86	25

Table A-5: Generation Dispatch- 2015 Cases with NW FMM

Generator Name	Fuel	WP Pgen (MW)	SP Pgen (MW)	SL Pgen (MW)	PMAX (MW)	Area
Syncrude Aurora G1	Cogeneration	63.1	63.2	67.4	86	25
Syncrude Aurora G2	Cogeneration	60.8	60.9	64.9	82.1	25
Conklin GT1	Cogeneration	75.0	70.9	75.6	85	25
Conklin GT2	Cogeneration	65.4	65.5	69.9	85	25
Firebag 2	Cogeneration	61.5	61.7	65.8	93.6	25
Firebag 2	Cogeneration	61.5	61.7	65.8	93.6	25
Firebag 1	Cogeneration	70.0	70.2	74.8	86.8	25
Horizon Upgrader-STG1	Cogen Gas Turbine	13.1	13.1	14.0	15.9	25
Horizon Upgrader-GTG1	Cogen Steam Turbine	66.2	66.3	70.7	91.8	25
LONGLAKEG1	Cogeneration	60.5	60.7	64.7	80	25
LONGLAKEG2	Cogeneration	60.5	60.7	64.7	80	25
LONGLAKEGT3	Cogeneration	8.7	8.7	9.3	11.5	25
LONGLAKEGT4	Cogeneration	8.7	8.7	9.3	11.5	25
Millennium 3	Cogeneration	52.3	52.4	55.9	64	25
Millennium 4	Cogeneration	62.3	62.5	66.6	115.4	25
Millennium 5	Cogeneration	94.6	94.8	101.1	115.4	25
Millennium 6	Cogeneration	94.6	94.8	101.1	84.5	25
MuskegG1	Cogeneration	77.7	77.9	83.0	83.2	25
MuskegG2	Cogeneration	77.7	77.9	83.0	32	25
Suncor 2	Cogeneration	24.6	24.7	26.3	17.2	25
Suncor 1	Cogeneration	13.8	13.9	14.8	50	25
Syncrude G1	Cogeneration	36.9	37.0	39.5	50	25
Syncrude G2	Cogeneration	36.9	37.0	39.5	22	25
Syncrude G3	Cogeneration	16.2	16.2	17.3	50	25
Syncrude G4	Cogeneration	36.9	37.0	39.5	22.5	25
Syncrude G5	Cogeneration	16.9	17.0	18.1	68	25
Syncrude G6	Cogeneration	50.0	50.1	53.4	27	25

Generator Name	Fuel	WP Pgen (MW)	SP Pgen (MW)	SL Pgen (MW)	PMAX (MW)	Area
Syncrude-UE-1-G11	Cogeneration	19.9	20.0	21.3	66.7	25
Syncrude-UE-1-G12	Cogeneration	55.4	55.5	59.2	76	25
Kearl 1	Cogeneration	61.5	61.7	65.8	100	25
Firebag 3	Cogeneration	61.5	61.7	65.8	93.6	25
Firebag 3	Cogeneration	65.4	65.5	69.9	86	25
Meg Surmont	Cogeneration	76.9	77.1	82.2	85	25
MacKay	Cogeneration	0	0	135.4	165	25

Table A-5: Generation Dispatch- 2020 Cases with NW FMM

Generator Name	Fuel	WP Pgen (MW)	SP Pgen (MW)	SL Pgen (MW)	WP Sensitivity Pgen (MW)	PMAX (MW)	Area
Dover North	Cogeneration	65.0	65.0	64.0	65.0	85	25
Dover South	Cogeneration	65.0	65.0	64.0	65.0	85	25
Syncrude Aurora G1	Cogeneration	63.4	63.2	68.3	63.4	86	25
Syncrude Aurora G2	Cogeneration	61.1	60.9	65.8	61.1	82.1	25
Conklin GT1	Cogeneration	71.2	71.0	76.7	71.2	85	25
Conklin GT2	Cogeneration	65.8	65.6	70.8	65.8	85	25
Firebag 3	Cogeneration	61.9	61.7	66.7	61.9	93.6	25
Firebag 3	Cogeneration	61.9	61.7	66.7	61.9	86	25
Firebag 2	Cogeneration	61.9	61.7	66.7	61.9	93.6	25
Firebag 2	Cogeneration	61.9	61.7	66.7	61.9	93.6	25
Firebag 1	Cogeneration	70.4	70.2	75.8	70.4	86.8	25
GenCOG 1	Cogeneration	65.8	65.6	70.8	65.8	85	25
Meg Surmont	Cogeneration	65.8	65.6	70.8	65.8	85	25
GenCOG 2	Cogeneration	77.4	77.1	83.3	77.4	100	25
GenCOG 3	Cogeneration	65.8	65.6	70.8	65.8	85	25
GenCOG 5	Cogeneration	65.8	65.6	70.8	65.8	85	25
GenCOG 7	Cogeneration	77.4	77.1	83.3	77.4	100	25
GenCOG 8	Cogeneration	65.8	65.6	70.8	65.8	85	25
GenCOG 9	Cogeneration	65.8	60.2	65.0	65.8	85	25
Horizon Upgrader-STG1	Cogen Gas Turbine	13.2	13.1	14.2	13.2	15.9	25
Horizon Upgrader-GTG1	Cogen Steam Turbine	66.5	66.3	71.7	66.5	91.8	25
Kearl 1	Cogeneration	77.4	77.1	83.3	77.4	100	25
LONGLAKEG1	Cogeneration	60.9	60.7	65.6	60.9	80	25
LONGLAKEG2	Cogeneration	60.9	60.7	65.6	60.9	80	25
LONGLAKEGT3	Cogeneration	8.8	8.7	9.4	8.8	11.5	25
LONGLAKEGT4	Cogeneration	8.8	8.7	9.4	8.8	11.5	25
MacKay	Cogeneration	116.9	138.3	125.1	116.9	165	25
Millennium 3	Cogeneration	52.6	52.4	56.7	52.6	64	25
Millennium 5	Cogeneration	95.1	94.9	102.5	95.1	115.4	25
Millennium 6	Cogeneration	95.1	94.9	102.5	95.1	84.5	25
MuskegG1	Cogeneration	78.1	77.9	84.2	78.1	83.2	25
MuskegG2	Cogeneration	78.1	77.9	84.2	78.1	32	25
Suncor 2	Cogeneration	24.8	24.7	26.7	24.8	17.2	25

Generator Name	Fuel	WP Pgen (MW)	SP Pgen (MW)	SL Pgen (MW)	WP Sensitivity Pgen (MW)	PMAX (MW)	Area
Suncor 1	Cogeneration	13.9	13.9	15.0	13.9	50	25
Syncrude G1	Cogeneration	37.1	37.0	40.0	37.1	50	25
Syncrude G2	Cogeneration	37.1	37.0	40.0	37.1	22	25
Syncrude G3	Cogeneration	16.2	16.2	17.5	16.2	50	25
Syncrude G4	Cogeneration	37.1	37.0	40.0	37.1	22.5	25
Syncrude G5	Cogeneration	17.0	17.0	18.3	17.0	68	25
Syncrude G6	Cogeneration	50.3	50.1	54.2	50.3	27	25
Syncrude-UE-1-G11	Cogeneration	27.1	18.8	20.3	27.1	66.7	25
Syncrude-UE-1-G12	Cogeneration	55.7	55.5	60.0	55.7	76	25
Millennium 4	Cogeneration	62.7	62.5	67.5	62.7	115.4	25
MRCP	Cogeneration	0	0	64	0	85	25

ATTACHMENT B
Capacitor Banks

Table B-1: 2013WP Capacitor Banks

2013SP							
Area Number	Substation	Nominal Voltage (kV)	Bini	S1	Bstep1	S2	Bstep2
Fort McMurray Area 25	Leismer 72S	138	60	2	30	0	0
	Dover 888S	240	100	1	-40	1	100
	Horizon Upgrading 3 7502	34	21.11	1	21.11	0	0
	Horizon Upgrading 2 7502	34	10.56	1	10.56	0	0
	Horizon Upgrading 4 7502	34	21.11	1	21.11	0	0
	Horizon Upgrading 5 7502	34	0	1	14.57	0	0
	Horse River 875S	138	27.56	2	13.78	0	0
	Salt Creek 977S	240	0	1	-34.96	0	0
	McMillan 885S	25	-20	1	-20	0	0
	Steepbank 1 836S	13.8	8.17	1	8.17	0	0
	Hangingstone 1 820S	25	5	2	5	0	0
	Kinosis 856S	25	0	1	-20	0	0
	Hormin 1 7501	34	21.11	1	21.11	0	0
	Steepbank 2 836S	13.8	8.17	1	8.17	0	0
	Hangingstone 2 820S	25	5	2	5	0	0
	Wabasca 720S	25	-10	3	-5	0	0
	Hormin 2 7501	34	21.11	1	21.11	0	0

Table B-2: 2013SP Capacitor Banks

2013SP							
Area Number	Substation	Nominal Voltage (kV)	Bini	S1	Bstep1	S2	Bstep2
Fort McMurray Area 25	Leismer 72S	138	60	2	30	0	0
	Dover 888S	240	0	1	-40	1	100
	Horizon Upgrading 3 7502	34	21.11	1	21.11	0	0
	Horizon Upgrading 2 7502	34	10.56	1	10.56	0	0
	Horizon Upgrading 4 7502	34	21.11	1	21.11	0	0
	Horizon Upgrading 5 7502	34	0	1	14.57	0	0

	Horse River 875S	138	27.56	2	13.78	0	0
	Salt Creek 977S	240	0	1	-34.96	0	0
	McMillan 885S	25	0	1	-20	0	0
	Steepbank 1 836S	13.8	0	1	8.17	0	0
	Hangingstone 1 820S	25	10	2	5	0	0
	Kinosis 856S	25	0	1	-20	0	0
	Hormin 1 7501	34	21.11	1	21.11	0	0
	Steepbank 2 836S	13.8	0	1	8.17	0	0
	Hangingstone 2 820S	25	10	2	5	0	0
	Wabasca 720S	25	-10	3	-5	0	0
	Hormin 2 7501	34	21.11	1	21.11	0	0

Table B-1: 2014WP Capacitor Banks

2013SP							
Area Number	**Substation**	**Nominal Voltage (kV)**	**Bini**	**S1**	**Bstep1**	**S2**	**Bstep2**
Fort McMurray Area 25	Leismer 72S	138	60	2	30	0	0
	Dover 888S	240	100	1	-40	1	100
	Horizon Upgrading 3 7502	34	21.11	1	21.11	0	0
	Horizon Upgrading 2 7502	34	10.56	1	10.56	0	0
	Horizon Upgrading 4 7502	34	0	1	21.11	0	0
	Horizon Upgrading 5 7502	34	0	1	14.57	0	0
	Horse River 875S	138	27.56	2	13.78	0	0
	Salt Creek 977S	240	0	1	-34.96	0	0
	McMillan 885S	25	-20	1	-20	0	0
	Steepbank 1 836S	13.8	0	1	8.17	0	0
	Hangingstone 1 820S	25	10	2	5	0	0
	Kinosis 856S	25	0	1	-20	0	0
	Hormin 1 7501	34	21.11	1	21.11	0	0
	Steepbank 2 836S	13.8	0	1	8.17	0	0
	Hangingstone 2 820S	25	10	2	5	0	0
	Wabasca 720S	25	0	3	-5	0	0
	Hormin 2 7501	34	21.11	1	21.11	0	0

Table B-1: 2014SP Capacitor Banks

2013SP							
Area Number	Substation	Nominal Voltage (kV)	Bini	S1	Bstep1	S2	Bstep2
Fort McMurray Area 25	Leismer 72S	138	60	2	30	0	0
	Dover 888S	240	0	1	-40	1	100
	Horizon Upgrading 3 7502	34	21.11	1	21.11	0	0
	Horizon Upgrading 2 7502	34	10.56	1	10.56	0	0
	Horizon Upgrading 4 7502	34	0	1	21.11	0	0
	Horizon Upgrading 5 7502	34	0	1	14.57	0	0
	Horse River 875S	138	27.56	2	13.78	0	0
	Salt Creek 977S	240	0	1	-34.96	0	0
	McMillan 885S	25	-20	1	-20	0	0
	Steepbank 1 836S	13.8	0	1	8.17	0	0
	Hangingstone 1 820S	25	10	2	5	0	0
	Kinosis 856S	25	0	1	-20	0	0
	Hormin 1 7501	34	0	1	21.11	0	0
	Steepbank 2 836S	13.8	0	1	8.17	0	0
	Hangingstone 2 820S	25	10	2	5	0	0
	Wabasca 720S	25	-5	3	-5	0	0
	Hormin 2 7501	34	21.11	1	21.11	0	0

Table B-1: 2015WP Capacitor Banks

2015WP							
Area Number	Substation	Nominal Voltage (kV)	Bini	S1	Bstep1	S2	Bstep2
Fort McMurray Area 25	Leismer 72S	138	60	2	30	0	0
	Dover 888S	240	100	1	100	0	0
	Horizon Upgrading 3 7502	34	21.11	1	21.11	0	0
	Horizon Upgrading 2 7502	34	10.56	1	10.56	0	0
	Horizon Upgrading 4 7502	34	0	1	21.11	0	0

	Horizon Upgrading 5 7502	34	0	1	14.57	0	0
	Horse River 875S	138	27.56	2	13.78	0	0
	Salt Creek 977S	240	0	1	-34.96	0	0
	McMillan 885S	25	-20	1	-20	0	0
	Steepbank 1 836S	13.8	0	1	8.17	0	0
	Hangingstone 1 820S	25	10	2	5	0	0
	Kinosis 856S	25	0	1	-20	0	0
	Hormin 1 7501	34	0	1	21.11	0	0
	Steepbank 2 836S	13.8	0	1	8.17	0	0
	Hangingstone 2 820S	25	0	2	5	0	0
	Wabasca 720S	25	0	3	-5	0	0
	Hormin 2 7501	34	21.11	1	21.11	0	0
	Thickwood 951S	240	100	2	100	0	0
	Thickwood 951S SVC	34	6.55	1	-75	1	90

Table B-1: 2015SP Capacitor Banks

2015SP							
Area Number	**Substation**	**Nominal Voltage (kV)**	**Bini**	**S1**	**Bstep1**	**S2**	**Bstep2**
Fort McMurray Area 25	Leismer 72S	138	60	2	30	0	0
	Dover 888S	240	100	1	-40	1	100
	Horizon Upgrading 3 7502	34	21.11	1	21.11	0	0
	Horizon Upgrading 2 7502	34	10.56	1	10.56	0	0
	Horizon Upgrading 4 7502	34	21.11	1	21.11	0	0
	Horizon Upgrading 5 7502	34	0	1	14.57	0	0
	Horse River 875S	138	27.56	2	13.78	0	0
	Salt Creek 977S	240	0	1	-34.96	0	0
	McMillan 885S	25	-20	1	-20	0	0
	Steepbank 1 836S	13.8	8.17	1	8.17	0	0
	Hangingstone 1 820S	25	10	2	5	0	0
	Kinosis 856S	25	0	1	-20	0	0
	Hormin 1 7501	34	0	1	21.11	0	0
	Steepbank 2 836S	13.8	8.17	1	8.17	0	0

	Hangingstone 2 820S	25	10	2	5	0	0
	Wabasca 720S	25	0	3	-5	0	0
	Hormin 2 7501	34	21.11	1	21.11	0	0
	Thickwood 951S	240	100	2	100	0	0
	Thickwood 951S SVC	34	-7.94	1	-75	1	90

Table B-1: 2015SL Capacitor Banks

2015SL							
Area Number	**Substation**	**Nominal Voltage (kV)**	**Bini**	**S1**	**Bstep1**	**S2**	**Bstep2**
Fort McMurray Area 25	Leismer 72S	138	60	2	30	0	0
	Dover 888S	240	-40	1	-40	1	100
	Horizon Upgrading 3 7502	34	21.11	1	21.11	0	0
	Horizon Upgrading 2 7502	34	10.56	1	10.56	0	0
	Horizon Upgrading 4 7502	34	21.11	1	21.11	0	0
	Horizon Upgrading 5 7502	34	0	1	14.57	0	0
	Horse River 875S	138	13.78	2	13.78	0	0
	Salt Creek 977S	240	0	1	-34.96	0	0
	McMillan 885S	25	-20	1	-20	0	0
	Steepbank 1 836S	13.8	8.17	1	8.17	0	0
	Hangingstone 1 820S	25	10	2	5	0	0
	Kinosis 856S	25	0	1	-20	0	0
	Hormin 1 7501	34	21.11	1	21.11	0	0
	Steepbank 2 836S	13.8	8.17	1	8.17	0	0
	Hangingstone 2 820S	25	10	2	5	0	0
	Wabasca 720S	25	-5	3	-5	0	0
	Hormin 2 7501	34	21.11	1	21.11	0	0
	Thickwood 951S	240	0	2	100	0	0
	Thickwood 951S SVC	34	-30.02	1	-75	1	90

Table B-1: 2020WP Capacitor Banks

2020WP							
Area Number	Substation	Nominal Voltage (kV)	Bini	S1	Bstep1	S2	Bstep2
Fort McMurray Area 25	Leismer 72S	138	60	2	30	0	0
	Dover 888S	240	100	1	-40	1	100
	Horizon Upgrading 3 7502	34	21.11	1	21.11	0	0
	Horizon Upgrading 2 7502	34	10.56	1	10.56	0	0
	Horizon Upgrading 4 7502	34	21.11	1	21.11	0	0
	Horizon Upgrading 5 7502	34	14.57	1	14.57	0	0
	Horse River 875S	138	27.56	2	13.78	0	0
	Salt Creek 977S	240	0	1	-34.96	0	0
	McMillan 885S	25	-20	1	-20	0	0
	Steepbank 1 836S	13.8	8.17	1	8.17	0	0
	Hangingstone 1 820S	25	10	2	5	0	0
	Kinosis 856S	25	0	1	-20	0	0
	Hormin 1 7501	34	21.11	1	21.11	0	0
	Steepbank 2 836S	13.8	8.17	1	8.17	0	0
	Hangingstone 2 820S	25	10	2	5	0	0
	Wabasca 720S	25	0	3	-5	0	0
	Hormin 2 7501	34	21.11	1	21.11	0	0
	Thickwood 951S	240	100	2	100	0	0
	Thickwood 951S SVC	34	-34.27	1	-75	1	90

Table B-1: 2020SP Capacitor Banks

2020SP							
Area Number	Substation	Nominal Voltage (kV)	Bini	S1	Bstep1	S2	Bstep2
Fort McMurray Area 25	Leismer 72S	138	60	2	30	0	0
	Dover 888S	240	100	1	-40	1	100
	Horizon Upgrading 3 7502	34	21.11	1	21.11	0	0

	Horizon Upgrading 2 7502	34	10.56	1	10.56	0	0
	Horizon Upgrading 4 7502	34	21.11	1	21.11	0	0
	Horizon Upgrading 5 7502	34	0	1	14.57	0	0
	Horse River 875S	138	27.56	2	13.78	0	0
	Salt Creek 977S	240	0	1	-34.96	0	0
	McMillan 885S	25	-20	1	-20	0	0
	Steepbank 1 836S	13.8	8.17	1	8.17	0	0
	Hangingstone 1 820S	25	5	2	5	0	0
	Kinosis 856S	25	0	1	-20	0	0
	Hormin 1 7501	34	0	1	21.11	0	0
	Steepbank 2 836S	13.8	8.17	1	8.17	0	0
	Hangingstone 2 820S	25	0	2	5	0	0
	Wabasca 720S	25	0	3	-5	0	0
	Hormin 2 7501	34	21.11	1	21.11	0	0
	Thickwood 951S	240	100	2	100	0	0
	Thickwood 951S SVC	34	-70.3	1	-75	1	90

Table B-1: 2020SL Capacitor Banks

2020SL							
Area Number	**Substation**	**Nominal Voltage (kV)**	**Bini**	**S1**	**Bstep1**	**S2**	**Bstep2**
Fort McMurray Area 25	Leismer 72S	138	60	2	30	0	0
	Dover 888S	240	0	1	100	0	0
	Horizon Upgrading 3 7502	34	21.11	1	21.11	0	0
	Horizon Upgrading 2 7502	34	10.56	1	10.56	0	0
	Horizon Upgrading 4 7502	34	21.11	1	21.11	0	0
	Horizon Upgrading 5 7502	34	0	1	14.57	0	0
	Horse River 875S	138	27.56	2	13.78	0	0
	Salt Creek 977S	240	0	1	-34.96	0	0
	McMillan 885S	25	-20	1	-20	0	0
	Steepbank 1 836S	13.8	8.17	1	8.17	0	0
	Hangingstone 1 820S	25	5	2	5	0	0
	Kinosis 856S	25	0	1	-20	0	0

	Hormin 1 7501	34	0	1	21.11	0	0
	Steepbank 2 836S	13.8	8.17	1	8.17	0	0
	Hangingstone 2 820S	25	0	2	5	0	0
	Wabasca 720S	25	0	3	-5	0	0
	Hormin 2 7501	34	21.11	1	21.11	0	0
	Thickwood 951S	240	0	2	100	0	0
	Thickwood 951S SVC	34	-75	1	-75	1	90

Table B-1: 2020WP Sensitivity Capacitor Banks

2020WP Sensitivity							
Area Number	**Substation**	**Nominal Voltage (kV)**	**Bini**	**S1**	**Bstep1**	**S2**	**Bstep2**
Fort McMurray Area 25	Leismer 72S	138	60	2	30	0	0
	Dover 888S	240	100	1	100	0	0
	Horizon Upgrading 3 7502	34	21.11	1	21.11	0	0
	Horizon Upgrading 2 7502	34	10.56	1	10.56	0	0
	Horizon Upgrading 4 7502	34	21.11	1	21.11	0	0
	Horizon Upgrading 5 7502	34	0	1	14.57	0	0
	Horse River 875S	138	27.56	2	13.78	0	0
	Salt Creek 977S	240	0	1	-34.96	0	0
	McMillan 885S	25	-20	1	-20	0	0
	Steepbank 1 836S	13.8	8.17	1	8.17	0	0
	Hangingstone 1 820S	25	10	2	5	0	0
	Kinosis 856S	25	0	1	-20	0	0
	Hormin 1 7501	34	21.11	1	21.11	0	0
	Steepbank 2 836S	13.8	8.17	1	8.17	0	0
	Hangingstone 2 820S	25	10	2	5	0	0
	Wabasca 720S	25	0	3	-5	0	0
	Hormin 2 7501	34	21.11	1	21.11	0	0
	Thickwood 951S	240	100	2	100	0	0
	Thickwood 951S SVC	34	-15.11	1	-75	1	90

ATTACHMENT C
Existing System Power Flow Analysis

Table C-1 Power Flow Analysis Summary- 2013 Summer Peak Existing System

Figure Name	Contingency	Thermal Violation	Voltage Violation
Figure C-2013SPEX-1	Base Case (N - 0)	None	None
Figure C-2013SPEX-2	Open 9L56 240kV line (WABASCA 720S to Brintnell 876S)	None	None
Figure C-2013SPEX-3	Open 9L15 240kV line (WESLEYCREEK 834S to Brintnell 876S	None	None
Figure C-2013SPEX-4	Open 9L10 240kV line (Brintnell 876S to Livock 939S)	None	None
Figure C-2013SPEX-5	Open 9L57 240kV line (Livock 939S to Dover 888S)	None	None
Figure C-2013SPEX-6	Open 9L09 240kV line (Dover 888S to Joslyn Creek 849S)	None	None
Figure C-2013SPEX-7	Open 9L32 240kV line (Joslyn Creek 849S to Bitumont 941S)	None	None
Figure C-2013SPEX-8	Open 9L01 240kV line (Dover 888S to Ruth Lake 848S)	None	None
Figure C-2013SPEX-9	Open 9L23 240kV line (Ruth Lake 848S to Salt Creek 977S)	None	None
Figure C-2013SPEX-10	Open 9L990 240kV line (Salt Creek 977S to Kinosis 856S)	None	None
Figure C-2013SPEX-11	Open 9L990 240kV line (Kinosis 856S to Leismer 72S)	None	None
Figure C-2013SPEX-12	Open 9L930 240kV line (Leismer 72S to Whitefish Lake 825S)	None	None
Figure C-2013SPEX-13	Open 9L22 240kV line (Whitefish Lake 825S to Heart Lake 898S)	None	None
Figure C-2013SPEX-14	Open 9L55 240kV line (Heart Lake 898S to RoundHill POD)	None	None

Figure C-2013SPEX-15	Open 9L55 240kV line (RoundHill POD to McMillan 885S)	None	None
Figure C-2013SPEX-16	Open 9L07 240kV line (McMillan 885S TO Dover 888S)	None	None

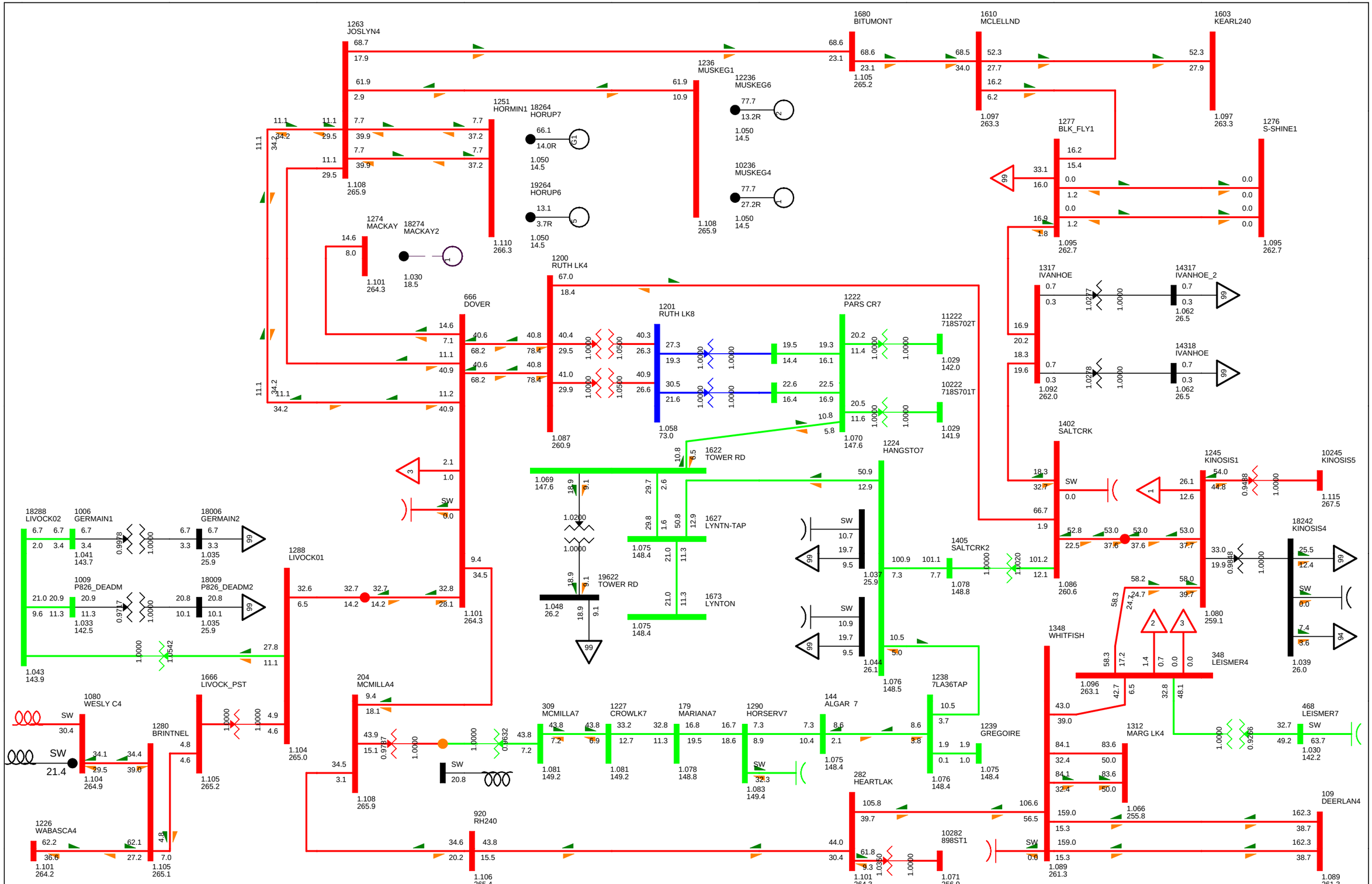
1263 JOSLYN4
1680 BITUMONT
1610 MCLELLND
1603 KEARL240
1236 MUSKEG1
12236 MUSKEG6
10236 MUSKEG4
1251 HORMIN1
18264 HORUP7
19264 HORUP6
1277 BLK_FLY1
1276 S-SHINE1
1274 MACKAY
18274 MACKAY2
1200 RUTH LK4
1201 RUTH LK8
666 DOVER
1222 PARS CR7
11222 718S702T
10222 718S701T
1317 IVANHOE
14317 IVANHOE_2
14318 IVANHOE
1402 SALTCRK
1622 TOWER RD
19622 TOWER RD
1627 LYNTN-TAP
1673 LYNTON
1224 HANGSTO7
1245 KINOSIS1
10245 KINOSIS5
18242 KINOSIS4
1405 SALTCRK2
1348 WHITFISH
348 LEISMER4
1238 7LA36TAP
1239 GREGOIRE
1312 MARG LK4
468 LEISMER7
282 HEARTLAK
109 DEERLAN4
10282 898ST1
18288 LIVOCK02
1006 GERMAIN1
18006 GERMAIN2
1009 P826_DEADM
18009 P826_DEADM2
1288 LIVOCK01
1666 LIVOCK_PST
1080 WESLY C4
1280 BRINTNEL
1226 WABASCA4
204 MCMILLA4
920 RH240
309 MCMILLA7
1227 CROWLK7
179 MARIANA7
1290 HORSERV7
144 ALGAR 7
1108 265.9
1680 68.6 23.1
1610 68.5 34.0
1603 52.3 27.9
1236 61.9 10.9
1108 265.9
1251 1.110 266.3
1277 1.095 262.7
1276 1.095 262.7
1274 1.101 264.3
1200 1.087 260.9
1201 1.058 73.0
666 1.104 265.0
1222 1.070 147.6
1317 1.062 26.5
14317 1.062 26.5
14318 1.062 26.5
1402 1.089 261.3
1622 1.069 147.6
1627 1.075 148.4
1673 1.075 148.4
1224 1.037 25.9
1245 1.080 259.1
10245 1.115 267.5
18242 1.086 260.6
1405 1.078 148.8
1348 1.096 263.1
348 1.039 26.0
1238 1.076 148.5
1239 1.075 148.4
1312 1.066 255.8
468 1.030 142.2
282 1.101 264.3
109 1.089 261.3
10282 1.071 256.9
18288 1.043 143.9
1006 1.041 143.7
18006 1.035 25.9
1009 1.033 142.5
18009 1.035 25.9
1288 1.101 264.3
1666 1.105 265.2
1080 1.104 264.9
1280 1.105 265.1
1226 1.101 264.2
204 1.108 265.9
920 1.106 265.4
309 1.081 149.2
1227 1.081 149.2
179 1.078 148.8
1290 1.083 149.4
144 1.075 148.4
1239 1.075 148.4
1222 1.029 142.0
1222 1.029 141.9
1222 1.029 141.9
1048 26.2
1044 26.1
1076 148.5
1086 260.6
1080 259.1
1096 263.1
1092 262.0
1097 263.3
1097 263.3
1105 265.2
1030 18.5
1050 14.5
1105 265.2
1035 25.9
1035 25.9
1035 25.9
1033 142.5
1041 143.7
1104 264.9
1101 264.2
1105 265.1
1106 265.4
1108 265.9
1081 149.2
1083 149.4
1078 148.8
1075 148.4
1076 148.4
1071 256.9
1089 261.3
1096 263.1
1039 26.0
1030 142.2
1115 267.5
1080 259.1
1086 260.6
1078 148.8
1037 25.9
1044 26.1
1076 148.5
1075 148.4
1066 255.8
1089 261.3
1101 264.3
1105 265.2
1104 265.0
1108 265.9
1087 260.9
1110 266.3
1101 264.3
1108 265.9
1105 265.2
1104 265.0
1108 265.9
1106 265.4
1101 264.2
1105 265.1
1104 264.9
1101 264.3
1071 256.9
1089 261.3
1096 263.1
1092 262.0
1086 260.6
1080 259.1
1039 26.0
1030 142.2
1115 267.5
1095 262.7
1095 262.7
1097 263.3
1097 263.3
1108 265.9
1105 265.2
1104 265.0
1108 265.9
1087 260.9
1110 266.3
1101 264.3
1108 265.9
1105 265.2
1104 265.0
1108 265.9
1106 265.4
1101 264.2
1105 265.1
1104 264.9
1101 264.3
1071 256.9
1089 261.3
1096 263.1
1092 262.0
1086 260.6
1080 259.1
1039 26.0
1030 142.2
1115 267.5
1095 262.7
1095 262.7
1097 263.3
1097 263.3
1105 265.2
1030 18.5
1050 14.5
1105 265.2
1035 25.9
1035 25.9
1035 25.9
1033 142.5
1041 143.7
1104 264.9
1101 264.2
1105 265.1
1106 265.4
1108 265.9
1081 149.2
1083 149.4
1078 148.8
1075 148.4
1076 148.4
1071 256.9
1089 261.3
1096 263.1
1039 26.0
1030 142.2
1115 267.5
1080 259.1
1086 260.6
1078 148.8
1037 25.9
1044 26.1
1076 148.5
1075 148.4
1066 255.8
1089 261.3
1101 264.3
1105 265.2
1104 265.0
1108 265.9
1087 260.9
1110 266.3
1101 264.3
1108 265.9
1105 265.2
1104 265.0
1108 265.9
1106 265.4
1101 264.2
1105 265.1
1104 264.9
1101 264.3
1071 256.9
1089 261.3
1096 263.1
1092 262.0
1086 260.6
1080 259.1
1039 26.0
1030 142.2
1115 267.5
1095 262.7
1095 262.7
1097 263.3
1097 263.3
1108 265.9

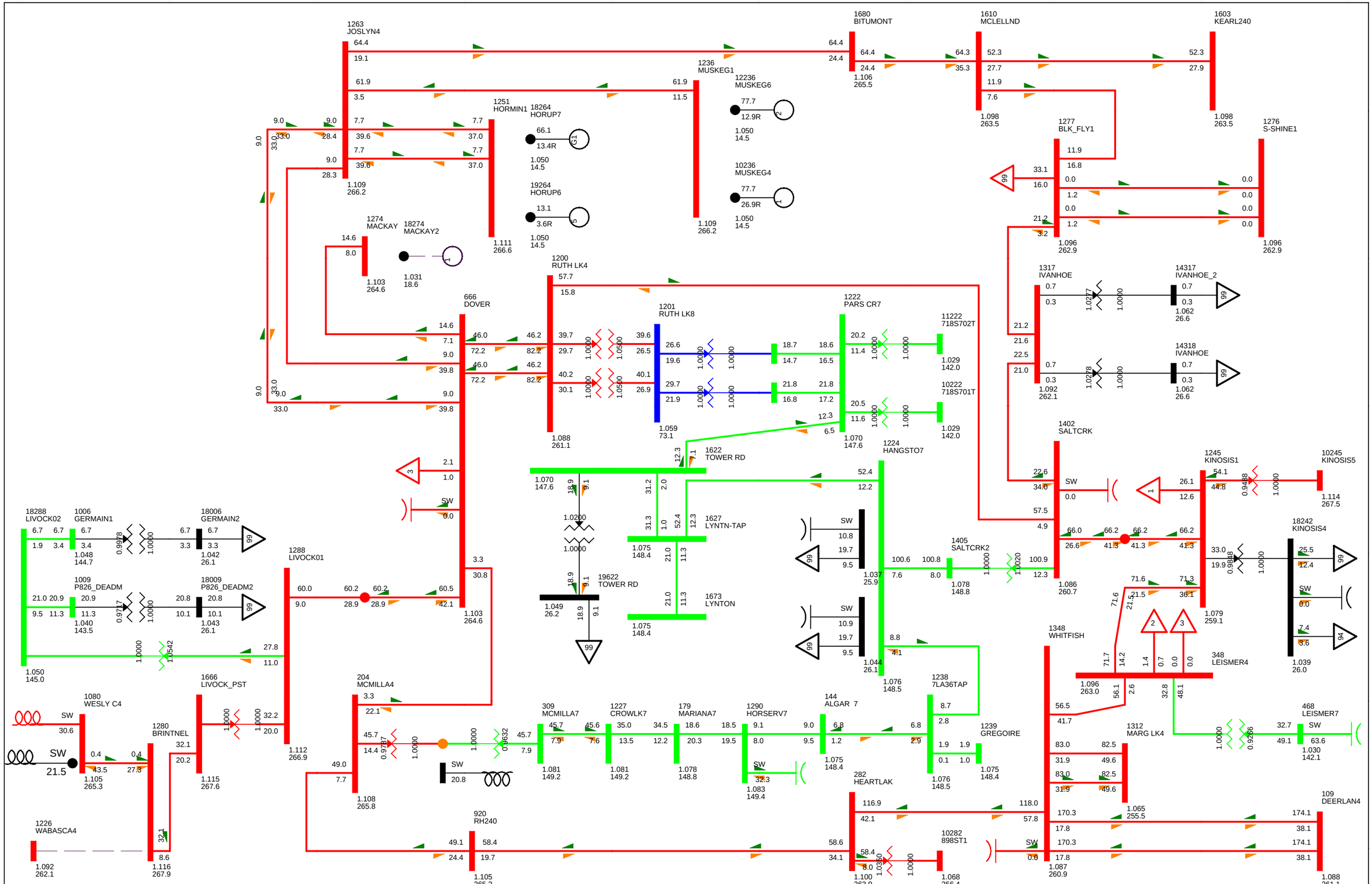
1263 JOSLYN4
1680 BITUMONT
1610 MCLELLND
1603 KEARL240
1236 MUSKEG1
12236 MUSKEG6
10236 MUSKEG4
1251 HORMIN1
18264 HORUP7
19264 HORUP6
1277 BLK_FLY1
1276 S-SHINE1
1274 MACKAY
18274 MACKAY2
1200 RUTH LK4
1317 IVANHOE
14317 IVANHOE_2
14318 IVANHOE
666 DOVER
1201 RUTH LK8
1222 PARS CR7
11222 718S702T
10222 718S701T
1622 TOWER RD
19622 TOWER RD
1627 LYNTN-TAP
1673 LYNTON
1224 HANGSTO7
1402 SALTCRK
1245 KINOSIS1
10245 KINOSIS5
18242 KINOSIS4
1405 SALTCRK2
1348 WHITFISH
348 LEISMER4
1238 7LA36TAP
1239 GREGOIRE
1312 MARG LK4
468 LEISMER7
282 HEARTLAK
109 DEERLAN4
10282 898ST1
18288 LIVOCK02
1006 GERMAIN1
18006 GERMAIN2
1009 P826_DEADM
18009 P826_DEADM2
1288 LIVOCK01
1666 LIVOCK_PST
1080 WESLY C4
1280 BRINTNEL
1226 WABASCA4
204 MCMILLA4
920 RH240
309 MCMILLA7
1227 CROWLK7
179 MARIANA7
1290 HORSERV7
144 ALGAR 7
SFM CUT PLANT (IMPORT)55.2 MW
BC - Alberta (IMPORT)811.1 MW
2013 SP EXISTING CASE
THU, JUN 16 2011 15:34
NW FMM STUDY
Figure C-2013SPEX-2
Bus - VOLTAGE (kV/PU)
Branch - MW/Mvar
Equipment - MW/Mvar
100.0%RATEA
1.120OV 0.950UV
kV: <=34.500 <=69.000 <=138.000 <=240.000 <=500.000

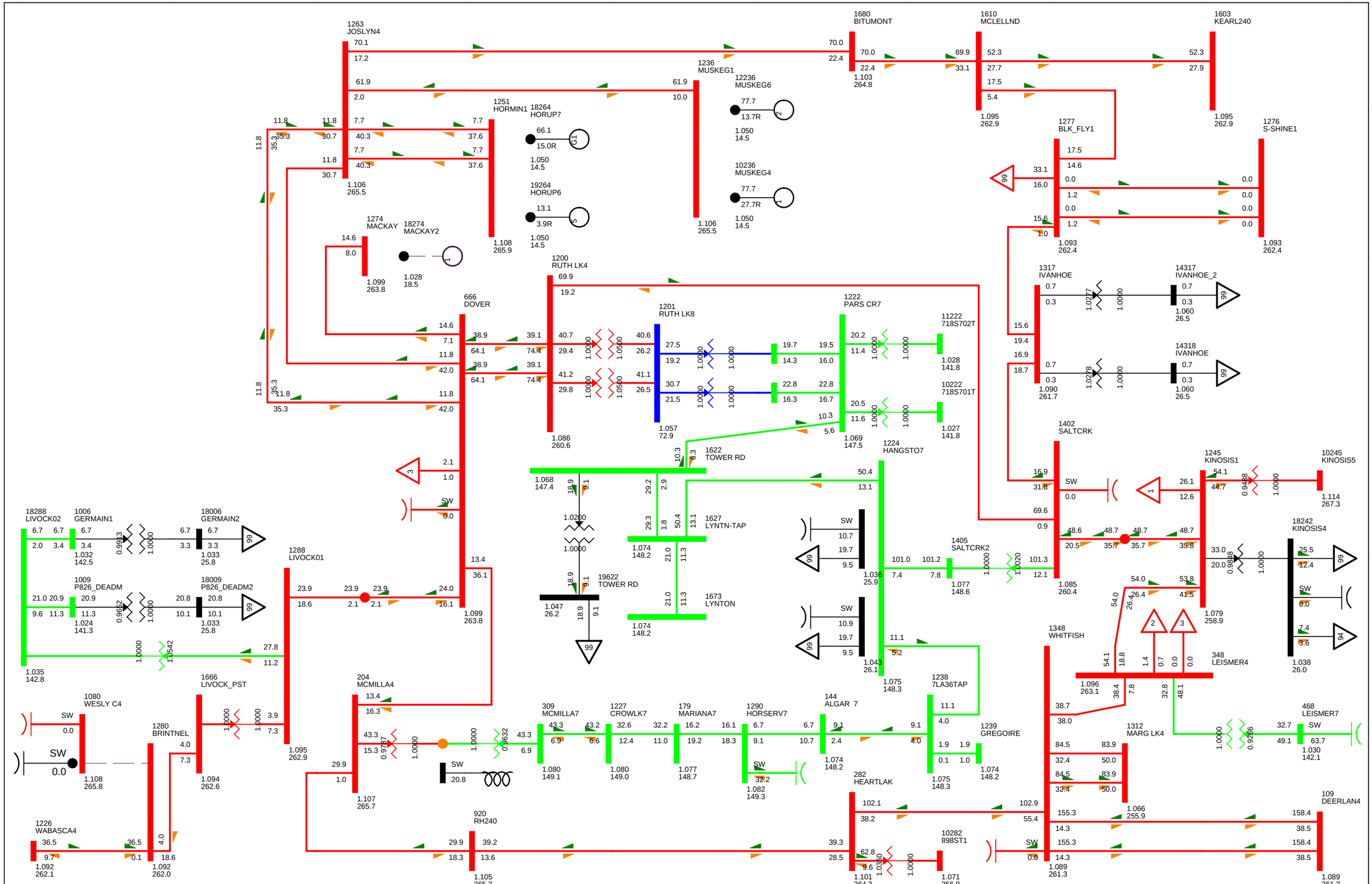

SFM CUT PLANT (IMPORT)54.1 MW
BC - Alberta (IMPORT)809.9 MW

2013 SP EXISTING CASE

THU, JUN 16 2011 15:34

NW FMM STUDY

Figure C-2013SPEX-3

Bus - VOLTAGE (kV/PU)
Branch - MW/Mvar
Equipment - MW/Mvar

100.0%RATEA
1.120OV 0.950UV
kV: <=34.500 <=69.000 <=138.000 <=240.000 <=500.000

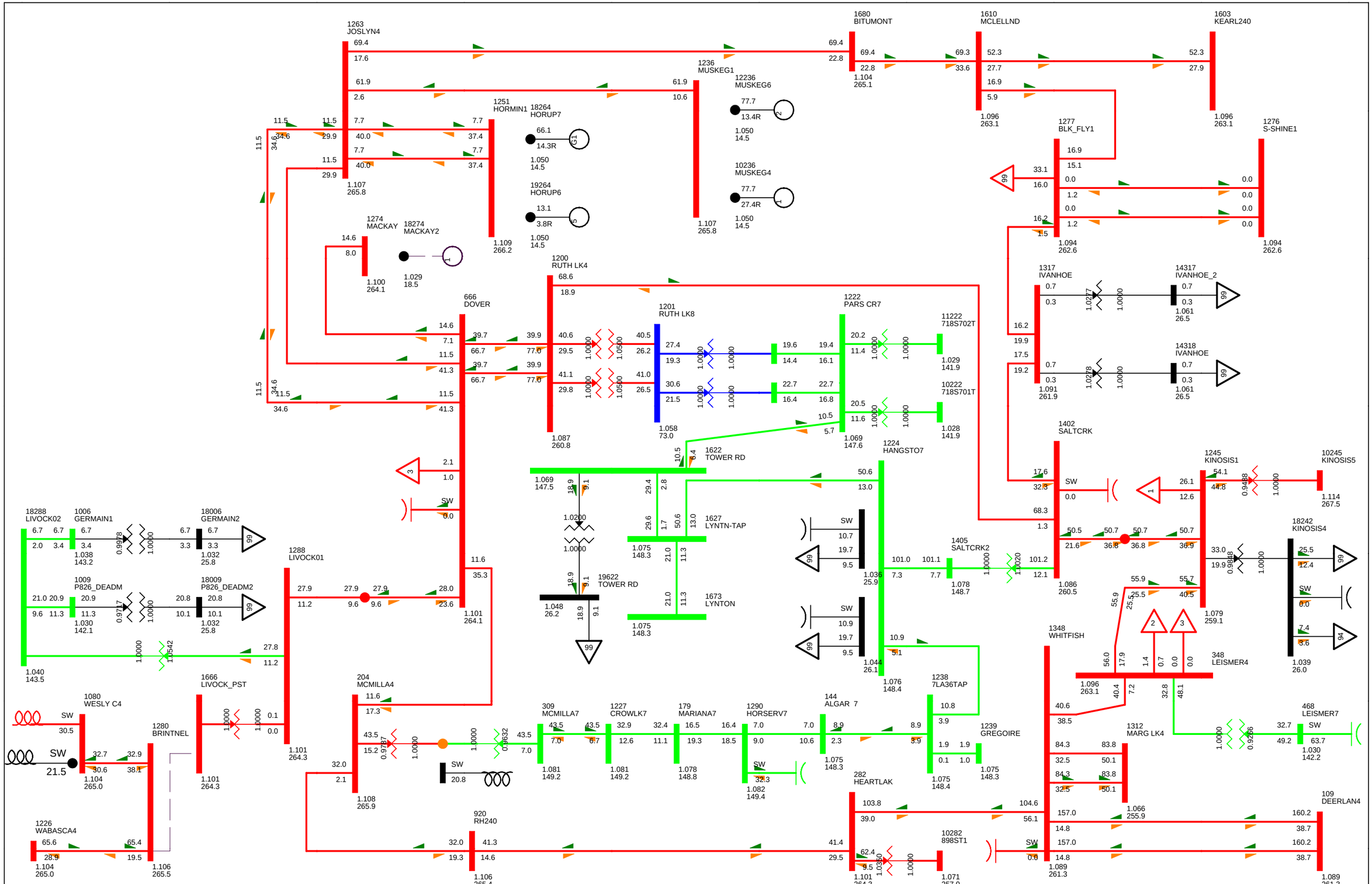

SFM CUT PLANT (IMPORT)54.2 MW
BC - Alberta (IMPORT)808.3 MW

2013 SP EXISTING CASE

THU, JUN 16 2011 15:34

NW FMM STUDY

Figure C-2013SPEX-4

Bus - VOLTAGE (kV/PU)
Branch - MW/Mvar
Equipment - MW/Mvar

100.0%RATEA
1.120OV 0.950UV
kV: <=34.500 <=69.000 <=138.000 <=240.000 <=500.000

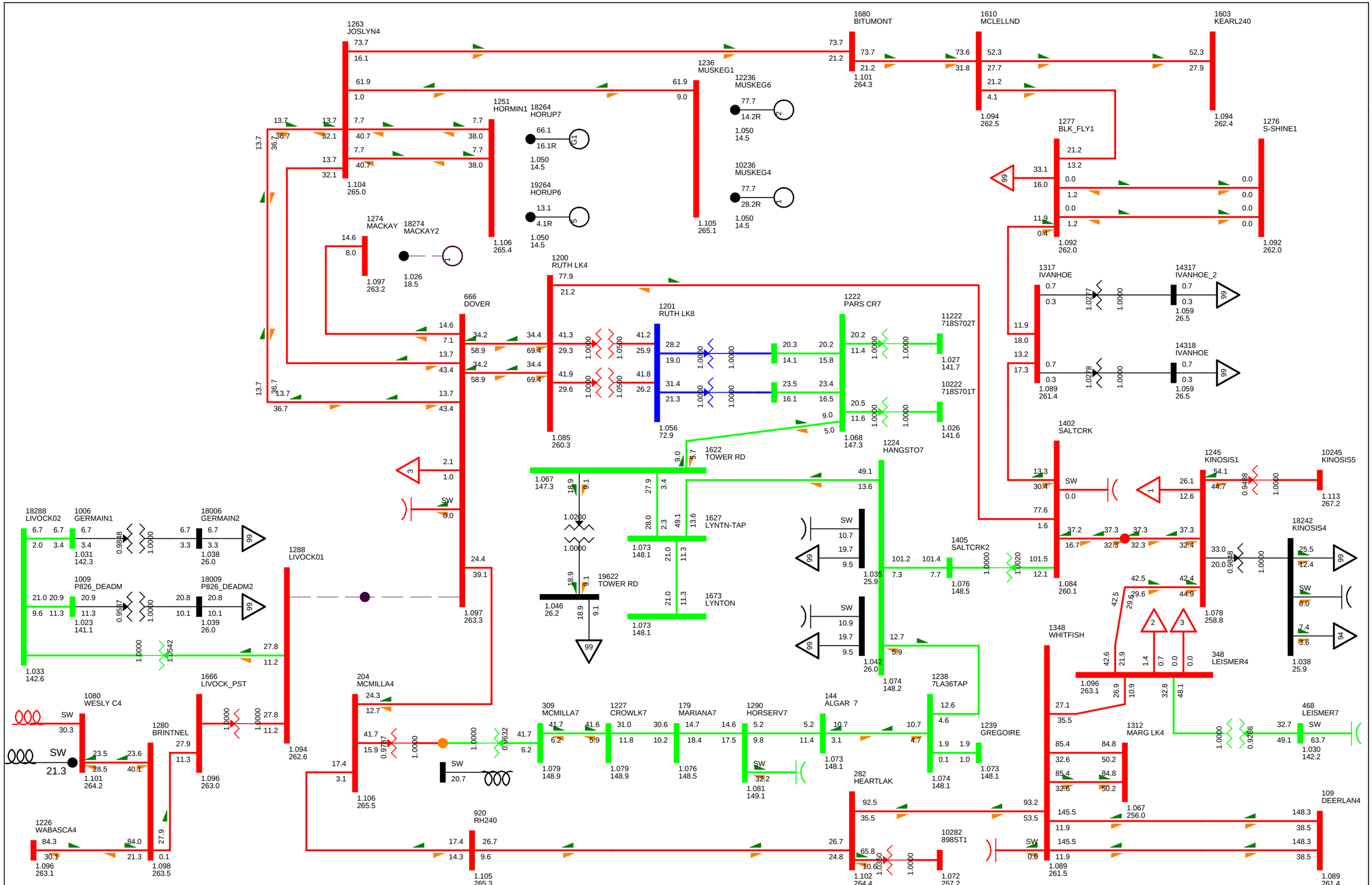

SFM CUT PLANT (IMPORT)53.8 MW
BC - Alberta (IMPORT)809.1 MW

2013 SP EXISTING CASE

THU, JUN 16 2011 15:34

NW FMM STUDY

Figure C-2013SPEX-5

Bus - VOLTAGE (kV/PU)
Branch - MW/Mvar
Equipment - MW/Mvar

100.0%RATEA
1.120OV 0.950UV
kV: <=34.500 <=69.000 <=138.000 <=240.000 <=500.000

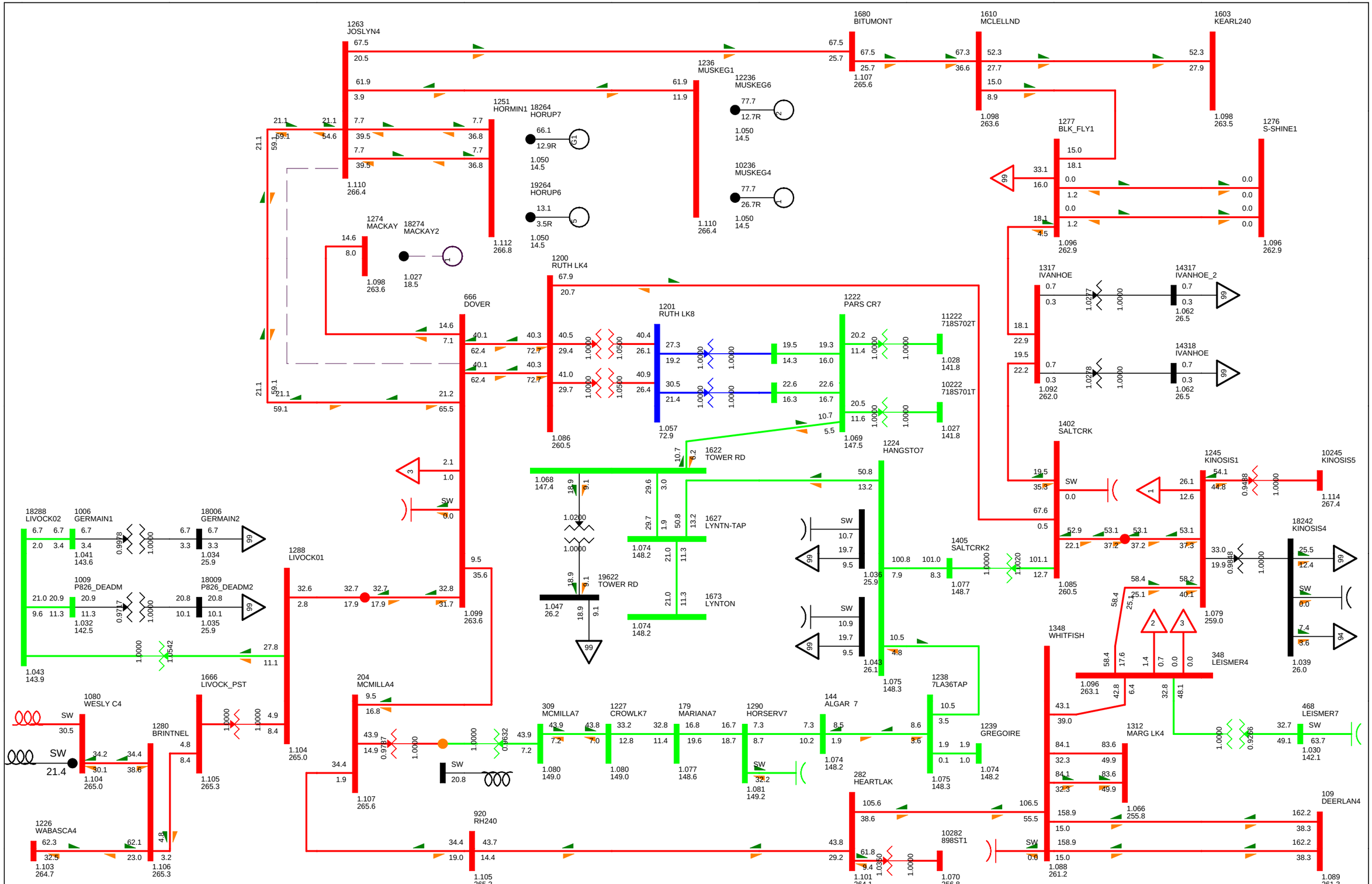
1263 JOSLYN4
1680 BITUMONT
1610 MCLELLND
1603 KEARL240
1236 MUSKEG1
12236 MUSKEG6
10236 MUSKEG4
1251 HORMIN1
18264 HORUP7
19264 HORUP6
1277 BLK_FLY1
1276 S-SHINE1
1274 MACKAY
18274 MACKAY2
1200 RUTH LK4
666 DOVER
1201 RUTH LK8
1222 PARS CR7
11222 718S702T
10222 718S701T
1317 IVANHOE
14317 IVANHOE_2
14318 IVANHOE
1402 SALTCRK
1622 TOWER RD
19622 TOWER RD
1627 LYNTN-TAP
1673 LYNTON
1224 HANGSTO7
1245 KINOSIS1
10245 KINOSIS5
18242 KINOSIS4
1405 SALTCRK2
1348 WHITFISH
348 LEISMER4
1238 7LA36TAP
1239 GREGOIRE
1312 MARG LK4
468 LEISMER7
282 HEARTLAK
109 DEERLAN4
10282 898ST1
18288 LIVOCK02
1006 GERMAIN1
18006 GERMAIN2
1009 P826_DEADM
18009 P826_DEADM2
1288 LIVOCK01
1666 LIVOCK_PST
1080 WESLY C4
1280 BRINTNEL
1226 WABASCA4
204 MCMILLA4
920 RH240
309 MCMILLA7
1227 CROWLK7
179 MARIANA7
1290 HORSERV7
144 ALGAR 7
SFM CUT PLANT (IMPORT)54.3 MW
BC - Alberta (IMPORT)808.3 MW
2013 SP EXISTING CASE
THU, JUN 16 2011 15:34
NW FMM STUDY
Figure C-2013SPEX-6
Bus - VOLTAGE (kV/PU)
Branch - MW/Mvar
Equipment - MW/Mvar
100.0%RATEA
1.120OV 0.950UV
kV: <=34.500 <=69.000 <=138.000 <=240.000 <=500.000

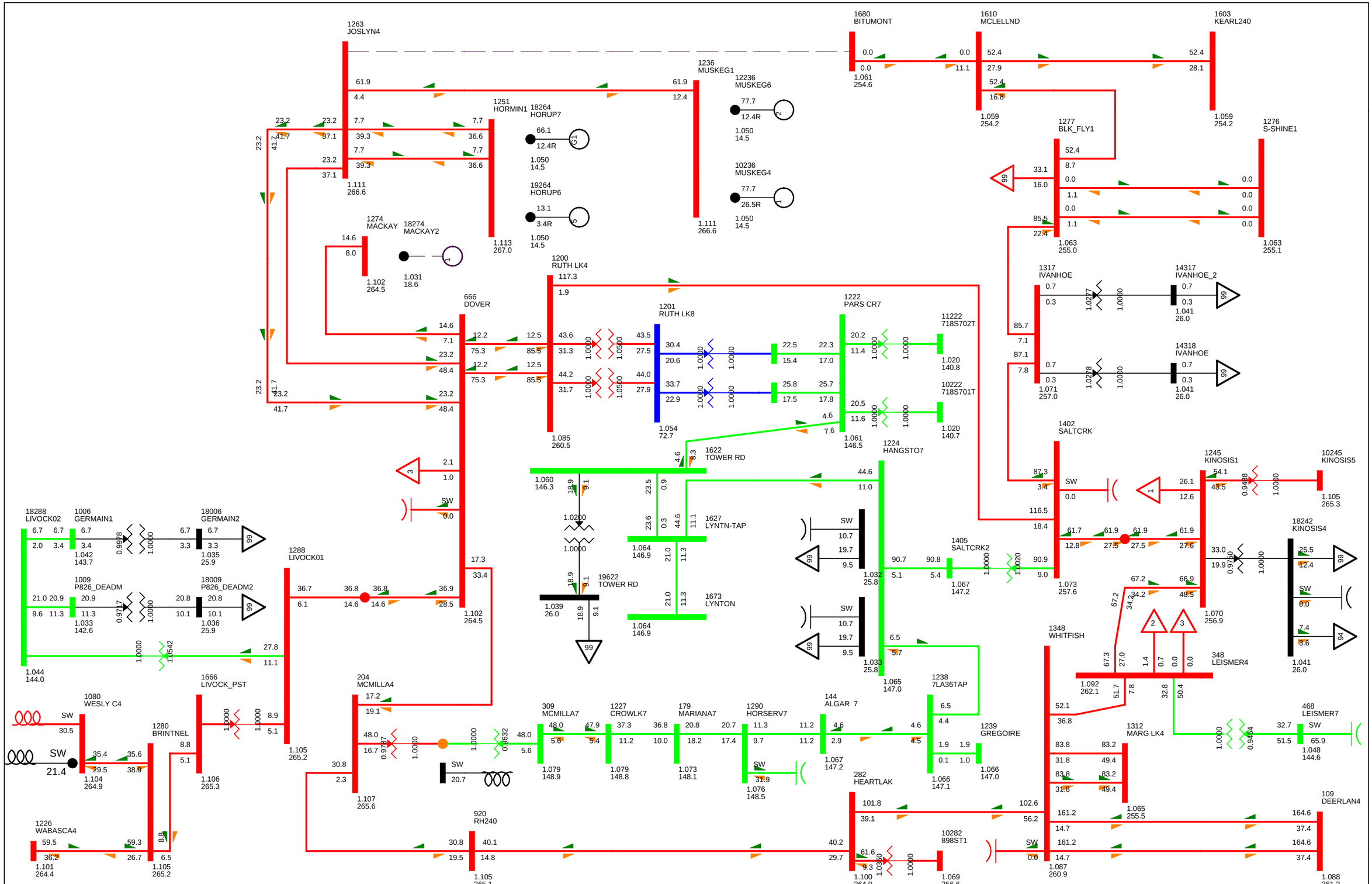

SFM CUT PLANT (IMPORT)55.6 MW
BC - Alberta (IMPORT)809.5 MW

2013 SP EXISTING CASE

THU, JUN 16 2011 15:34

NW FMM STUDY

Figure C-2013SPEX-7

Bus - VOLTAGE (kV/PU)
Branch - MW/Mvar
Equipment - MW/Mvar

100.0%RATEA
1.120OV 0.950UV
kV: <=34.500 <=69.000 <=138.000 <=240.000 <=500.000

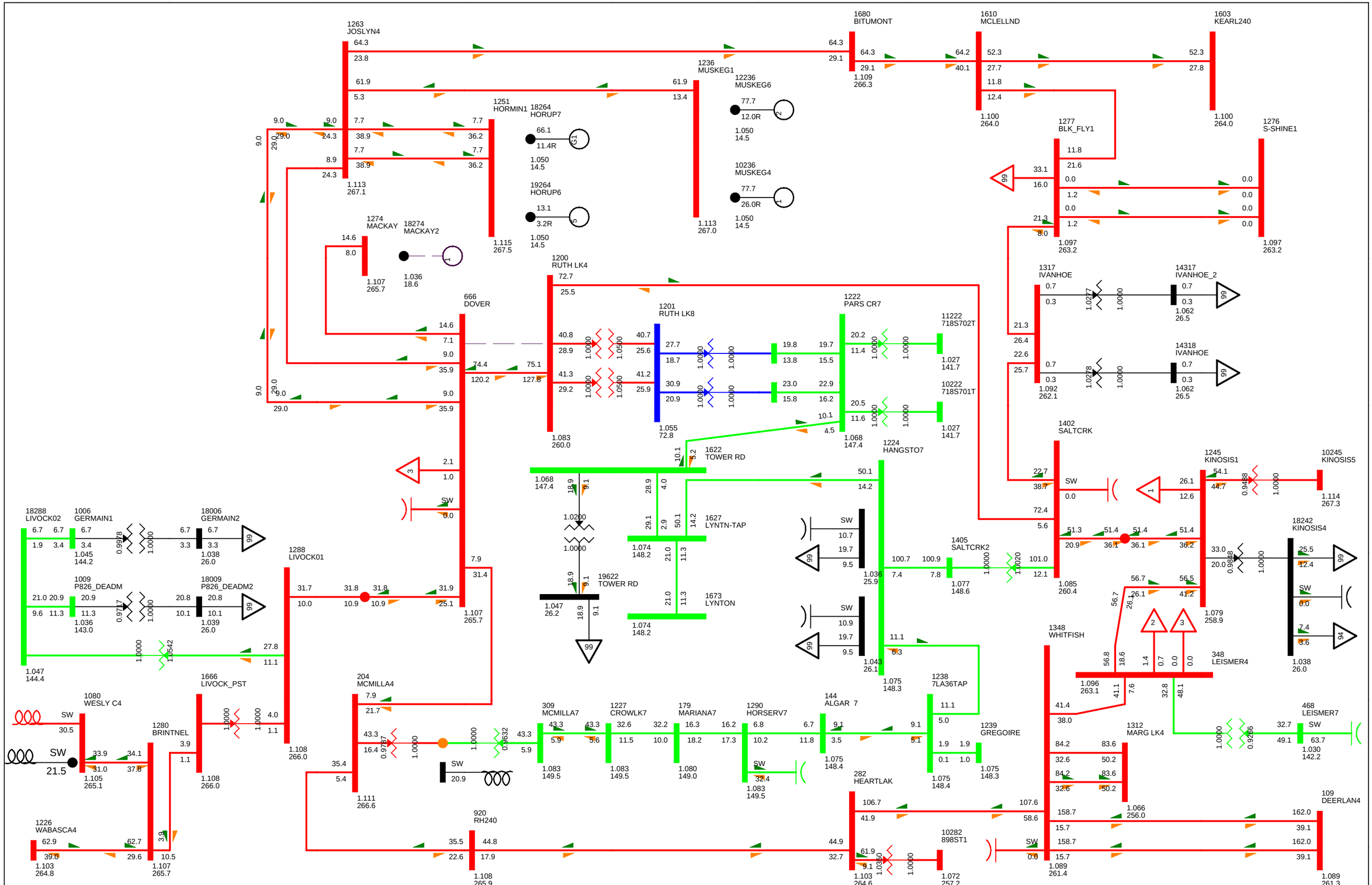

SFM CUT PLANT (IMPORT)54.5 MW
BC - Alberta (IMPORT)808.6 MW

2013 SP EXISTING CASE

THU, JUN 16 2011 15:34

NW FMM STUDY

Figure C-2013SPEX-8

Bus - VOLTAGE (kV/PU)
Branch - MW/Mvar
Equipment - MW/Mvar

100.0%RATEA
1.120OV 0.950UV
kV: <=34.500 <=69.000 <=138.000 <=240.000 <=500.000

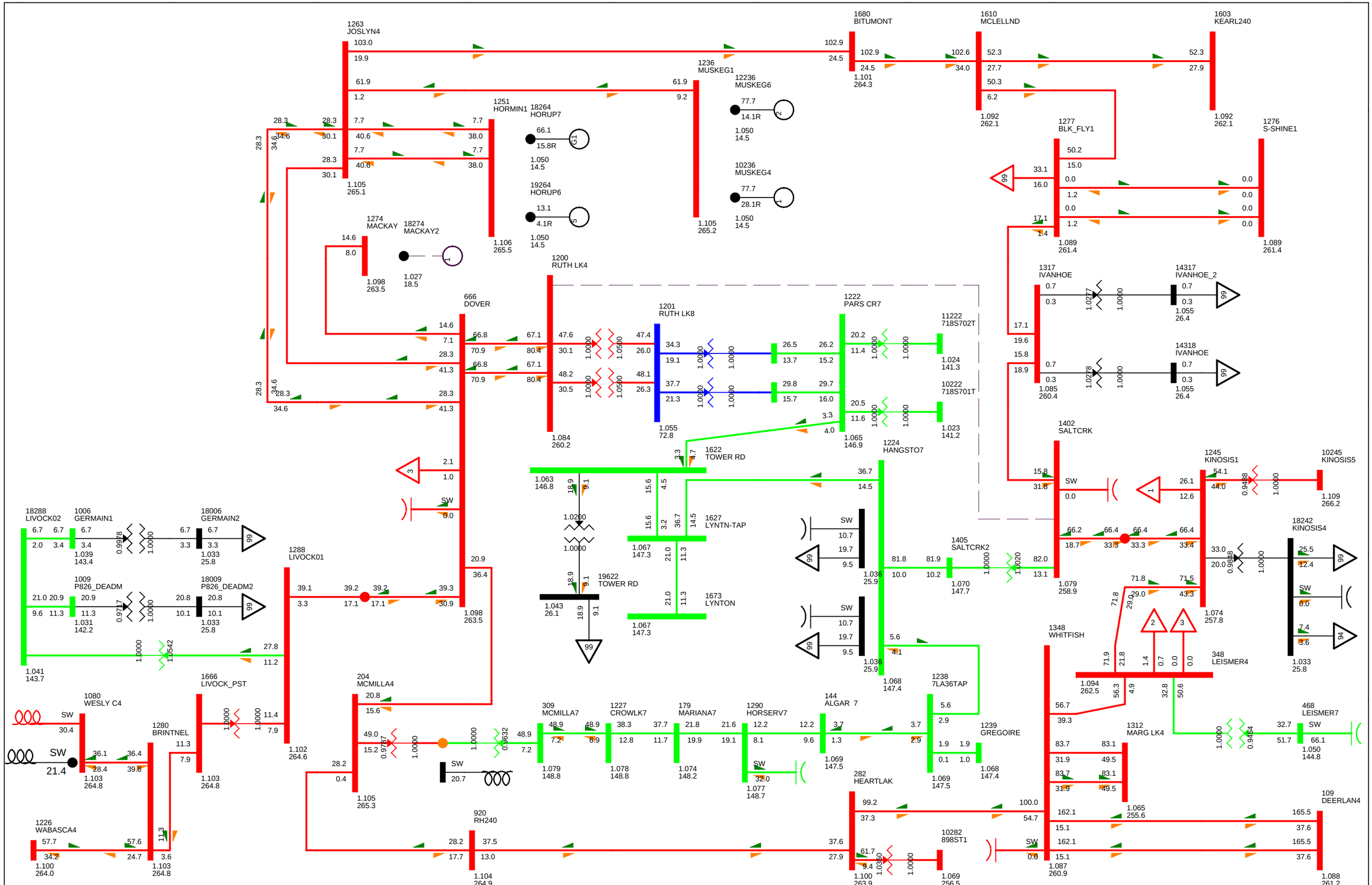
1263 JOSLYN4
1680 BITUMONT
1610 MCLELLND
1603 KEARL240
1236 MUSKEG1
12236 MUSKEG6
10236 MUSKEG4
1251 HORMIN1
18264 HORUP7
19264 HORUP6
1277 BLK_FLY1
1276 S-SHINE1
1274 MACKAY
18274 MACKAY2
1200 RUTH LK4
666 DOVER
1201 RUTH LK8
1222 PARS CR7
11222 718S702T
10222 718S701T
1317 IVANHOE
14317 IVANHOE_2
14318 IVANHOE
1622 TOWER RD
19622 TOWER RD
1627 LYNTN-TAP
1673 LYNTON
1224 HANGSTO7
1402 SALTCRK
1405 SALTCRK2
1245 KINOSIS1
10245 KINOSIS5
18242 KINOSIS4
1348 WHITFISH
348 LEISMER4
1312 MARG LK4
468 LEISMER7
1238 7LA36TAP
1239 GREGOIRE
282 HEARTLAK
10282 898ST1
109 DEERLAN4
18288 LIVOCK02
1006 GERMAIN1
18006 GERMAIN2
1009 P826_DEADM
18009 P826_DEADM2
1041 143.7
1288 LIVOCK01
1666 LIVOCK_PST
1080 WESLY C4
1280 BRINTNEL
1226 WABASCA4
1100 264.0
1103 264.8
204 MCMILLA4
920 RH240
1104 264.9
1105 265.3
1102 264.6
309 MCMILLA7
1227 CROWLK7
179 MARIANA7
1290 HORSERV7
144 ALGAR 7
1077 148.7
1069 147.5
1068 147.4
1079 148.8
1078 148.8
1074 148.2
1069 146.9
1065 146.9
1063 146.8
1067 147.3
1036 25.9
1070 147.7
1079 258.9
1074 257.8
1094 262.5
1087 260.9
1088 261.2
1109 266.2
1033 25.8
1089 261.4
1092 262.1
1105 265.2
1106 265.5
1098 263.5
1027 18.5
1084 260.2
1055 72.8
1065 146.9
1063 146.8
1043 26.1
1067 147.3
1036 25.9
1068 147.4
1069 256.5
1077 148.7
1069 147.5
1068 147.4
1079 148.8
1078 148.8
1074 148.2
1102 264.6
1105 265.3
1104 264.9
1100 264.0
1103 264.8
1041 143.7
1031 142.2
1039 143.4
1033 25.8
1085 260.4
1055 26.4
1024 141.3
1023 141.2
1069 256.5
1088 261.2
1109 266.2
1033 25.8
1055 26.4
1050 144.8
1087 260.9
1079 258.9
1074 257.8
1094 262.5
1089 261.4
1092 262.1
1105 265.1

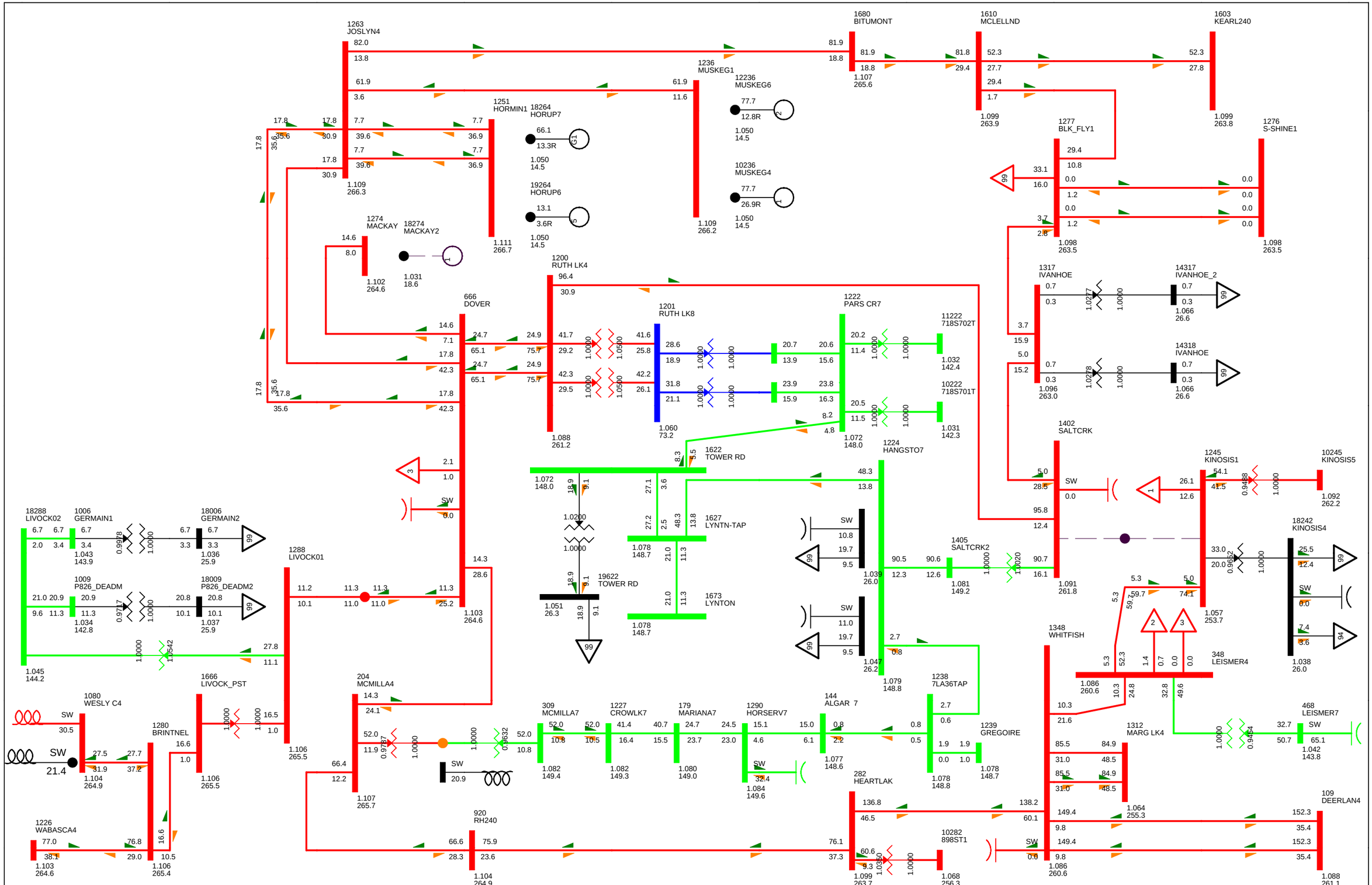

SFM CUT PLANT (IMPORT)54.6 MW
BC - Alberta (IMPORT)810.4 MW

2013 SP EXISTING CASE

THU, JUN 16 2011 15:35

NW FMM STUDY

Figure C-2013SPEX-10

Bus - VOLTAGE (kV/PU)
Branch - MW/Mvar
Equipment - MW/Mvar

100.0%RATEA
1.120OV 0.950UV
kV: <=34.500 <=69.000 <=138.000 <=240.000 <=500.000

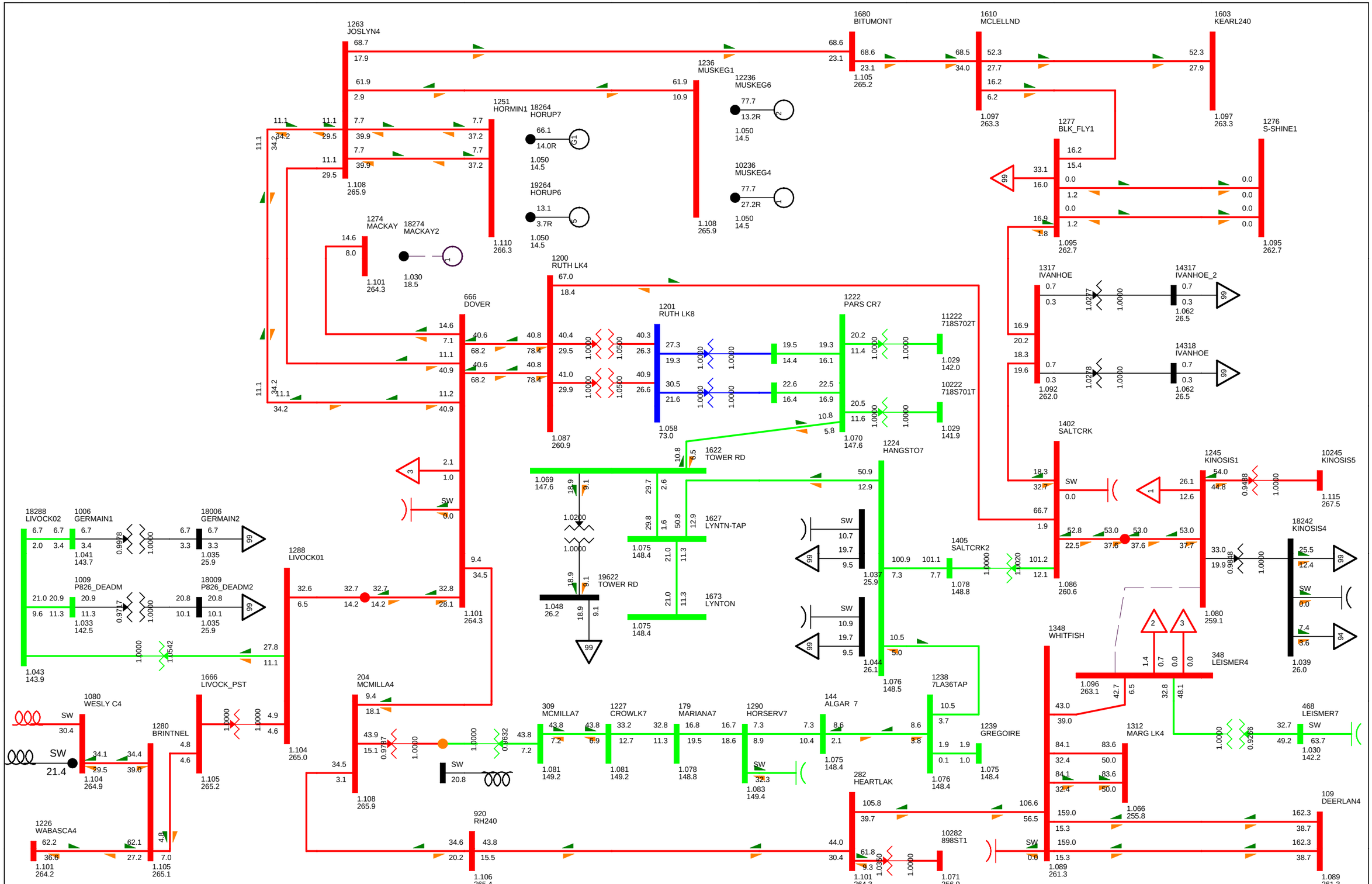

SFM CUT PLANT (IMPORT)54.3 MW
BC - Alberta (IMPORT)808.3 MW

2013 SP EXISTING CASE

THU, JUN 16 2011 15:35

NW FMM STUDY

Figure C-2013SPEX-11

Bus - VOLTAGE (kV/PU)
Branch - MW/Mvar
Equipment - MW/Mvar

100.0%RATEA
1.120OV 0.950UV
kV: <=34.500 <=69.000 <=138.000 <=240.000 <=500.000

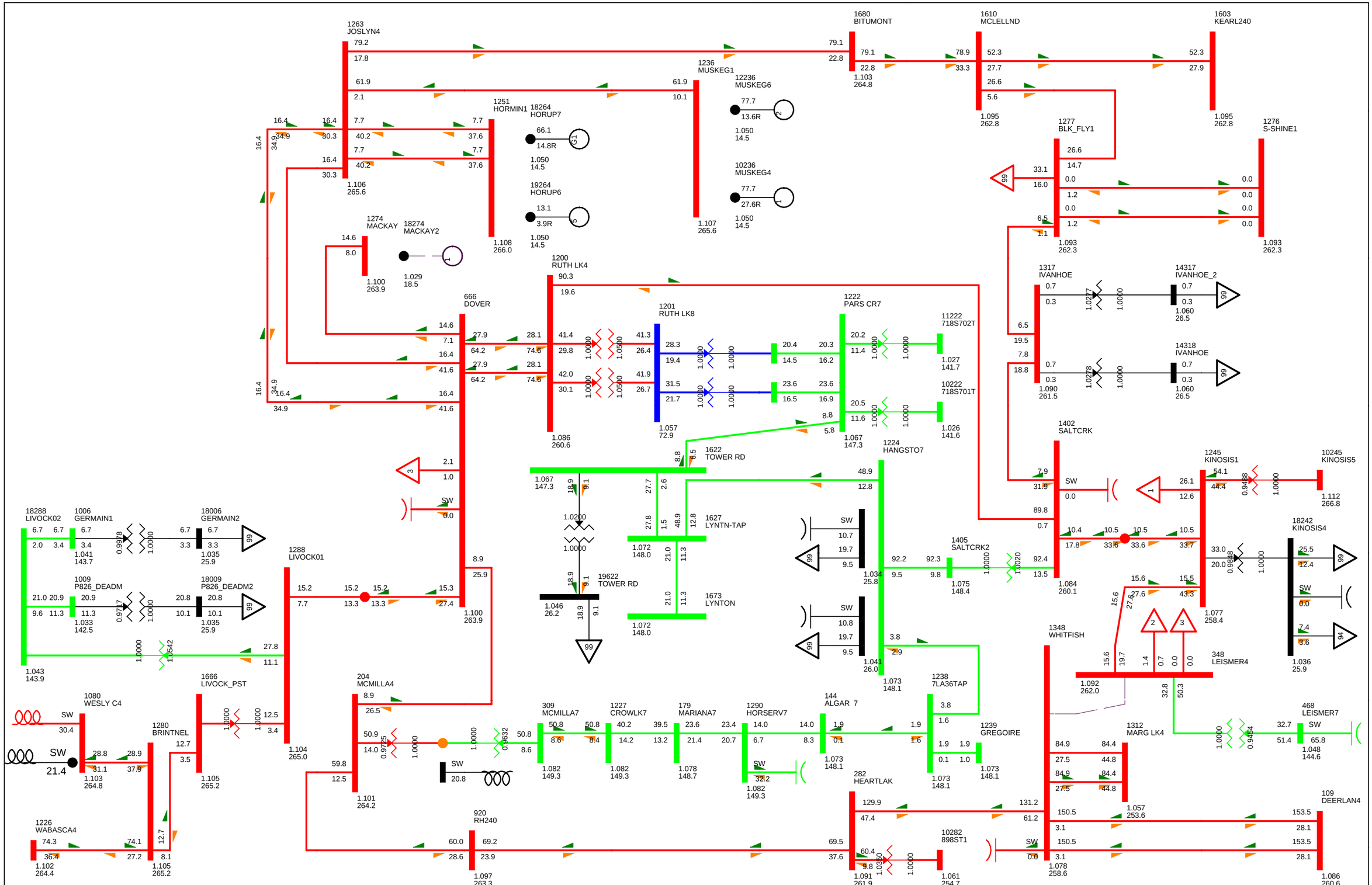

SFM CUT PLANT (IMPORT)54.3 MW
BC - Alberta (IMPORT)809.7 MW

2013 SP EXISTING CASE

THU, JUN 16 2011 15:35

NW FMM STUDY

Figure C-2013SPEX-12

Bus - VOLTAGE (kV/PU)
Branch - MW/Mvar
Equipment - MW/Mvar

100.0%RATEA
1.120OV 0.950UV
kV: <=34.500 <=69.000 <=138.000 <=240.000 <=500.000

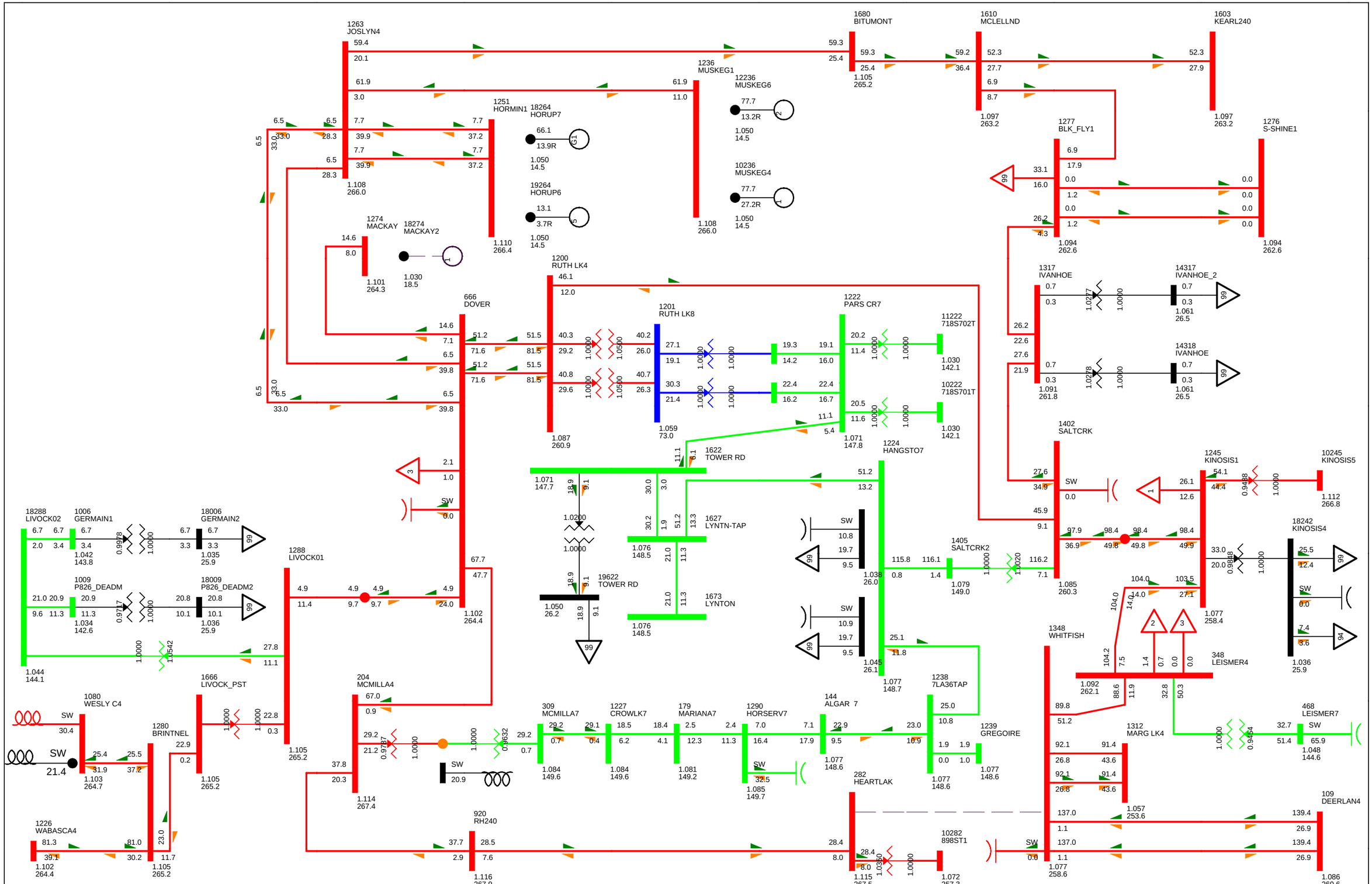

SFM CUT PLANT (IMPORT)56.4 MW
BC - Alberta (IMPORT)816.2 MW

2013 SP EXISTING CASE

THU, JUN 16 2011 15:35

NW FMM STUDY

Figure C-2013SPEX-13

Bus - VOLTAGE (kV/PU)
Branch - MW/Mvar
Equipment - MW/Mvar

100.0%RATEA
1.120OV 0.950UV
kV: <=34.500 <=69.000 <=138.000 <=240.000 <=500.000

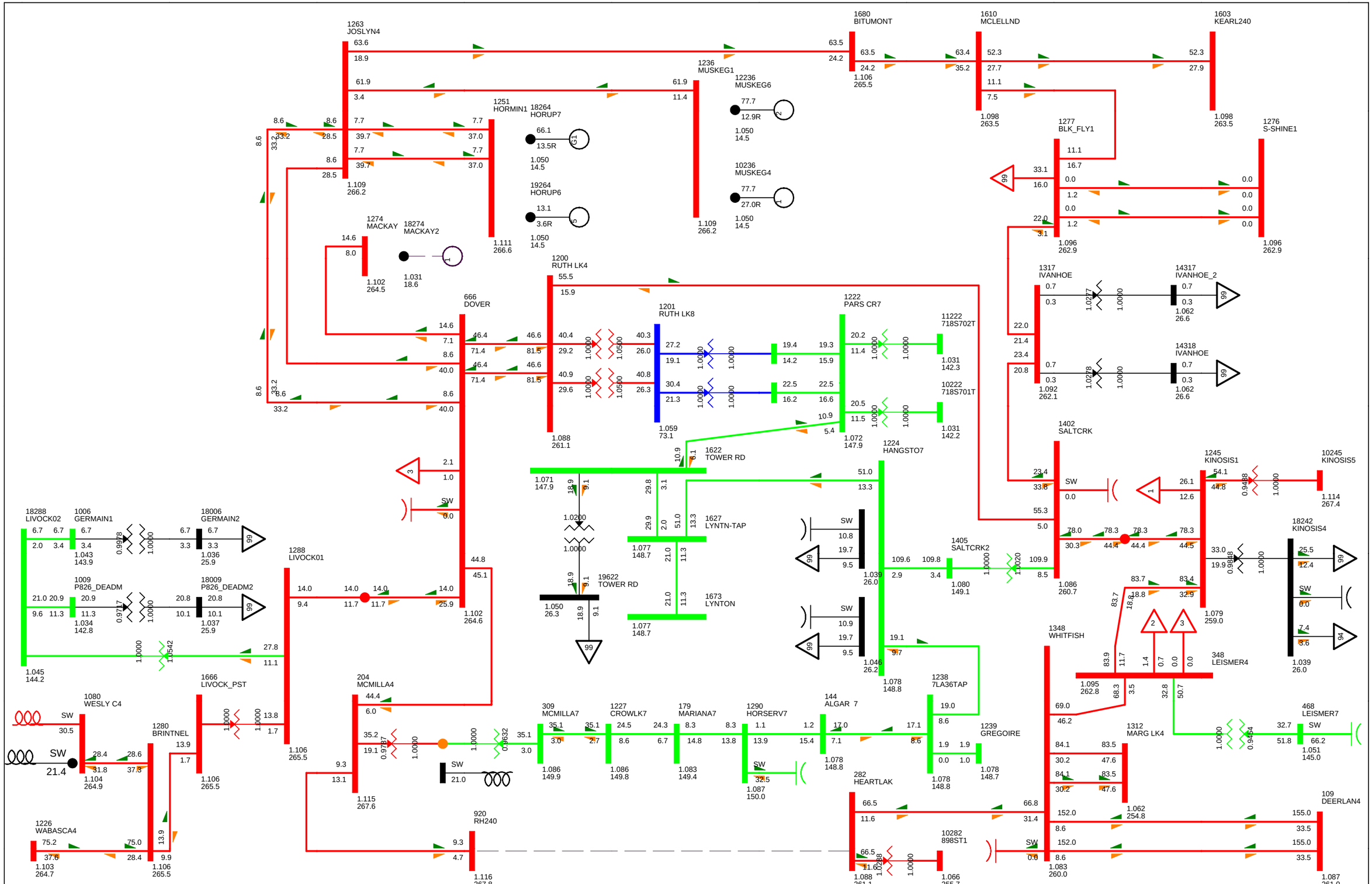
1263 JOSLYN4
1680 BITUMONT
1610 MCLELLND
1603 KEARL240
1236 MUSKEG1
12236 MUSKEG6
10236 MUSKEG4
1251 HORMIN1
18264 HORUP7
19264 HORUP6
1277 BLK_FLY1
1276 S-SHINE1
1274 MACKAY
18274 MACKAY2
1200 RUTH LK4
666 DOVER
1201 RUTH LK8
1222 PARS CR7
11222 718S702T
10222 718S701T
1317 IVANHOE
14317 IVANHOE_2
14318 IVANHOE
1402 SALTCRK
1622 TOWER RD
19622 TOWER RD
1627 LYNTN-TAP
1673 LYNTON
1224 HANGSTO7
1245 KINOSIS1
10245 KINOSIS5
18242 KINOSIS4
1405 SALTCRK2
1348 WHITFISH
348 LEISMER4
1238 7LA36TAP
1239 GREGOIRE
1312 MARG LK4
468 LEISMER7
18288 LIVOCK02
1006 GERMAIN1
18006 GERMAIN2
1009 P826_DEADM
18009 P826_DEADM2
1045 144.2
1080 WESLY C4
1280 BRINTNEL
1666 LIVOCK_PST
1226 WABASCA4
1103 264.7
1106 265.5
1288 LIVOCK01
1102 264.6
1106 265.5
204 MCMILLA4
1115 267.6
920 RH240
1116 267.8
309 MCMILLA7
1086 149.9
1227 CROWLK7
1086 149.8
179 MARIANA7
1083 149.4
1290 HORSERV7
1087 150.0
144 ALGAR 7
1078 148.8
282 HEARTLAK
1088 261.1
1066 255.7
1109 HEARTLAKE
1088 261.1
1109 266.2
1111 266.6
1102 264.5
1031 18.6
1088 261.1
1059 73.1
1072 147.9
1071 147.9
1077 148.7
1050 26.3
1039 26.0
1046 26.2
1078 148.8
1086 260.7
1079 259.0
1095 262.8
1092 262.1
1062 26.6
1096 262.9
1098 263.5
1114 267.4
1087 261.0
1083 260.0
1080 149.1
1078 148.7
1051 145.0
1031 142.3
1031 142.2
1031 142.1
1036 25.9
1037 25.9
1034 142.8
1043 143.9
1104 264.9
1050 14.5
1106 265.5
1102 263.5
1062 254.8
1039 26.0
1079 259.0
1086 260.7
1083 260.0
1087 261.0
1066 255.7
1088 261.1
1078 148.8
1078 148.7
1087 150.0
1083 149.4
1086 149.8
1086 149.9
1115 267.6
1116 267.8
1106 265.5
1103 264.7
1104 264.9
1045 144.2
1034 142.8
1043 143.9
1036 25.9
1037 25.9
1102 264.6
1106 265.5
1109 266.2
1111 266.6
1088 261.1
1059 73.1
1072 147.9
1071 147.9
1077 148.7
1050 26.3
1039 26.0
1046 26.2
1078 148.8
1086 260.7
1079 259.0
1095 262.8
1092 262.1
1062 26.6
1096 262.9
1098 263.5
1114 267.4
1087 261.0
1083 260.0
1080 149.1
1078 148.7
1051 145.0
1031 142.3
1031 142.2
1031 142.1

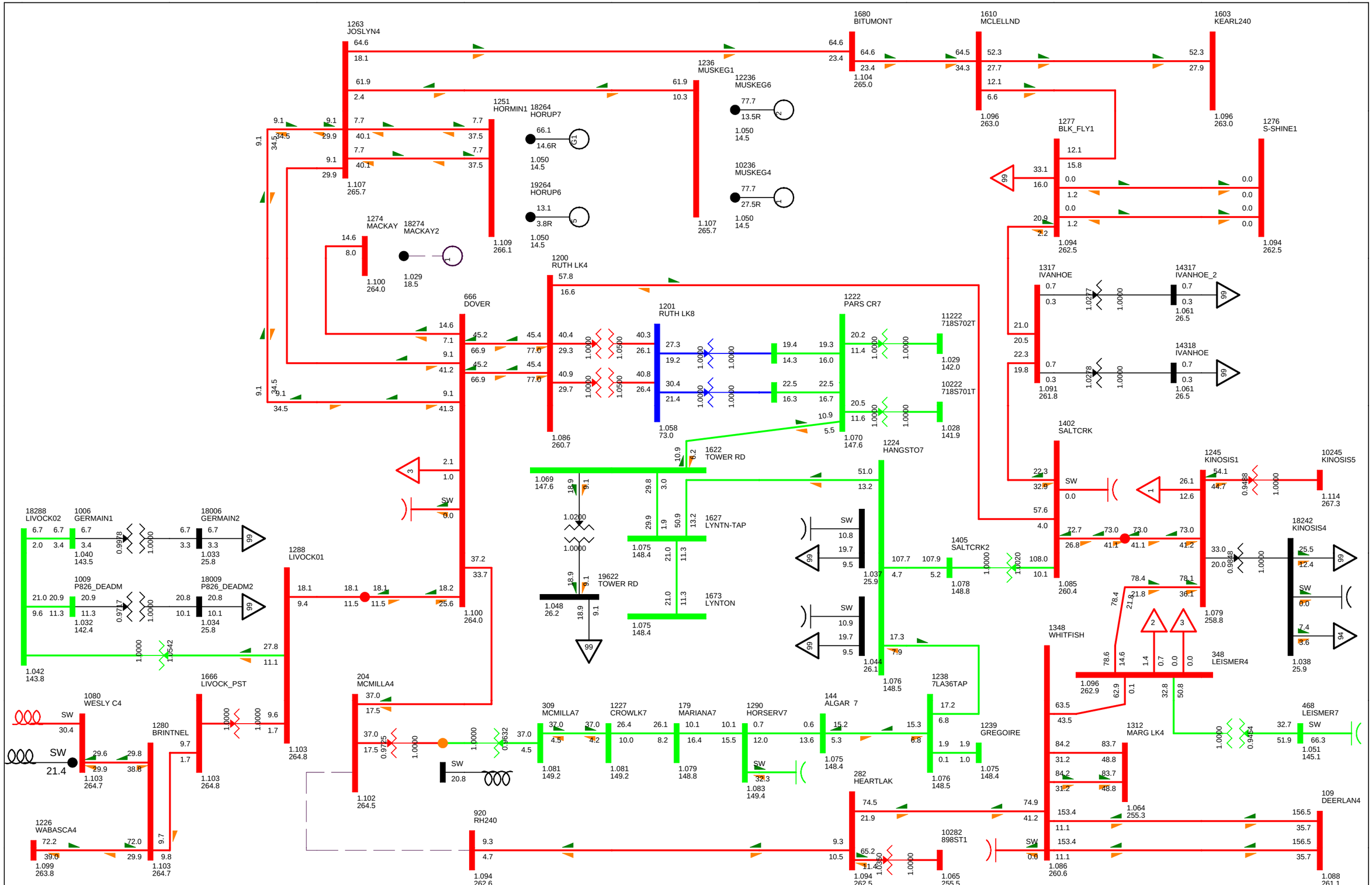
1263 JOSLYN4
1680 BITUMONT
1610 MCLELLND
1603 KEARL240
1236 MUSKEG1
12236 MUSKEG6
10236 MUSKEG4
1251 HORMIN1
18264 HORUP7
19264 HORUP6
1277 BLK_FLY1
1276 S-SHINE1
1274 MACKAY
18274 MACKAY2
1200 RUTH LK4
666 DOVER
1201 RUTH LK8
1222 PARS CR7
11222 718S702T
10222 718S701T
1317 IVANHOE
14317 IVANHOE_2
14318 IVANHOE
1402 SALTCRK
1622 TOWER RD
19622 TOWER RD
1627 LYNTN-TAP
1673 LYNTON
1224 HANGSTO7
1245 KINOSIS1
10245 KINOSIS5
18242 KINOSIS4
1405 SALTCRK2
1288 LIVOCK01
18288 LIVOCK02
1006 GERMAIN1
18006 GERMAIN2
1009 P826_DEADM
18009 P826_DEADM2
1666 LIVOCK_PST
1080 WESLY C4
1280 BRINTNEL
1226 WABASCA4
204 MCMILLA4
309 MCMILLA7
1227 CROWLK7
179 MARIANA7
1290 HORSERV7
144 ALGAR 7
1238 7LA36TAP
1239 GREGOIRE
282 HEARTLAK
920 RH240
1348 WHITFISH
348 LEISMER4
1312 MARG LK4
468 LEISMER7
109 DEERLAN4
1094 262.5
1085 260.4
1086 260.6
1088 261.1
1065 255.5
1102 264.5
1103 264.8
1103 264.7
1099 263.8
1042 143.8
1032 142.4
1040 143.5
1033 25.8
1034 25.8
1107 265.7
1109 266.1
1100 264.0
1029 18.5
1086 260.7
1058 73.0
1070 147.6
1069 147.6
1048 26.2
1075 148.4
1044 26.1
1037 25.9
1078 148.8
1079 258.8
1096 262.9
1038 25.9
1051 145.1
1083 149.4
1081 149.2
1075 148.4
1076 148.5
1091 261.8
1061 26.5
1029 142.0
1028 141.9
1104 265.0
1096 263.0
1114 267.3
SFM CUT PLANT (IMPORT)54.7 MW
BC - Alberta (IMPORT)808.7 MW
2013 SP EXISTING CASE
THU, JUN 16 2011 15:37
NW FMM STUDY
Figure C-2013SPEX-15
Bus - VOLTAGE (kV/PU)
Branch - MW/Mvar
Equipment - MW/Mvar
100.0%RATEA
1.120OV 0.950UV
kV: <=34.500 <=69.000 <=138.000 <=240.000 <=500.000

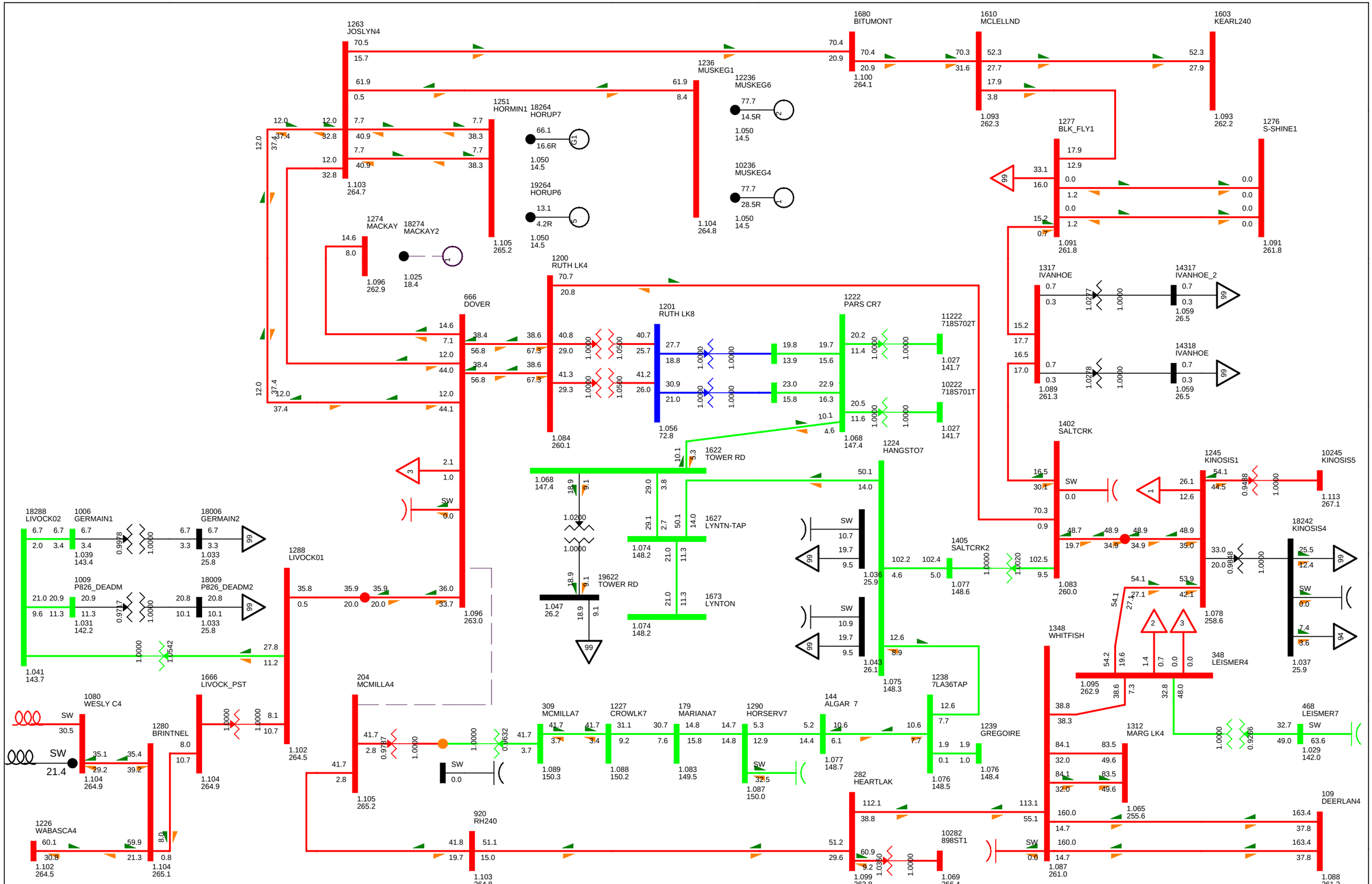
1263 JOSLYN4
1680 BITUMONT
1610 MCLELLND
1603 KEARL240
1236 MUSKEG1
12236 MUSKEG6
1251 HORMIN1
18264 HORUP7
19264 HORUP6
10236 MUSKEG4
1277 BLK_FLY1
1276 S-SHINE1
1274 MACKAY
18274 MACKAY2
1200 RUTH LK4
666 DOVER
1201 RUTH LK8
1222 PARS CR7
11222 718S702T
10222 718S701T
1622 TOWER RD
19622 TOWER RD
1627 LYNTN-TAP
1673 LYNTON
1224 HANGSTO7
1317 IVANHOE
14317 IVANHOE_2
14318 IVANHOE
1402 SALTCRK
1245 KINOSIS1
10245 KINOSIS5
1405 SALTCRK2
18242 KINOSIS4
1348 WHITFISH
348 LEISMER4
1238 7LA36TAP
1239 GREGOIRE
1312 MARG LK4
468 LEISMER7
282 HEARTLAK
10282 898ST1
109 DEERLAN4
18288 LIVOCK02
1006 GERMAIN1
18006 GERMAIN2
1009 P826_DEADM
18009 P826_DEADM2
1288 LIVOCK01
1666 LIVOCK_PST
1080 WESLY C4
1280 BRINTNEL
1226 WABASCA4
204 MCMILLA4
920 RH240
309 MCMILLA7
1227 CROWLK7
179 MARIANA7
1290 HORSERV7
144 ALGAR 7
SFM CUT PLANT (IMPORT)54.2 MW
BC - Alberta (IMPORT)808.2 MW
2013 SP EXISTING CASE
THU, JUN 16 2011 15:37
NW FMM STUDY
Figure C-2013SPEX-16
Bus - VOLTAGE (kV/PU)
Branch - MW/Mvar
Equipment - MW/Mvar
100.0%RATEA
1.120OV 0.950UV
kV: <=34.500 <=69.000 <=138.000 <=240.000 <=500.000

Table C-2 Power Flow Analysis Summary- 2013 Winter Peak Existing System

Figure Numbe	Contingency	Thermal Violation	Voltage Violation
Figure C-2013WPEX-1	Base Case (N - 0)	None	None
Figure C-2013WPEX-2	Open 9L56 240kV line (WABASCA 720S to Brintnell 876S)	None	None
Figure C-2013WPEX-3	Open 9L15 240kV line (WESLEYCREEK 834S to Brintnell 876S	None	None
Figure C-2013WPEX-4	Open 9L10 240kV line (Brintnell 876S to Livock 939S)	None	None
Figure C-2013WPEX-5	Open 9L57 240kV line (Livock 939S to Dover 888S)	None	None
Figure C-2013WPEX-6	Open 9L09 240kV line (Dover 888S to Joslyn Creek 849S)	None	None
Figure C-2013WPEX-7	Open 9L32 240kV line (Joslyn Creek 849S to Bitumont 941S)	None	None
Figure C-2013WPEX-8	Open 9L01 240kV line (Dover 888S to Ruth Lake 848S)	None	None
Figure C-2013WPEX-9	Open 9L23 240kV line (Ruth Lake 848S to Salt Creek 977S)	None	None
Figure C-2013WPEX-10	Open 9L990 240kV line (Salt Creek 977S to Kinosis 856S)	None	None
Figure C-2013WPEX-11	Open 9L990 240kV line (Kinosis 856S to Leismer 72S)	None	None
Figure C-2013WPEX-12	Open 9L930 240kV line (Leismer 72S to Whitefish Lake 825S)	None	None
Figure C-2013WPEX-13	Open 9L22 240kV line (Whitefish Lake 825S to Heart Lake 898S)	None	None
Figure C-2013WPEX-14	Open 9L55 240kV line (Heart Lake 898S to RoundHill POD)	None	None

Figure C-2013WPEX-15	Open 9L55 240kV line (RoundHill POD to McMillan 885S)	None	None
Figure C-2013WPEX-16	Open 9L07 240kV line (McMillan 885S TO Dover 888S)	None	None

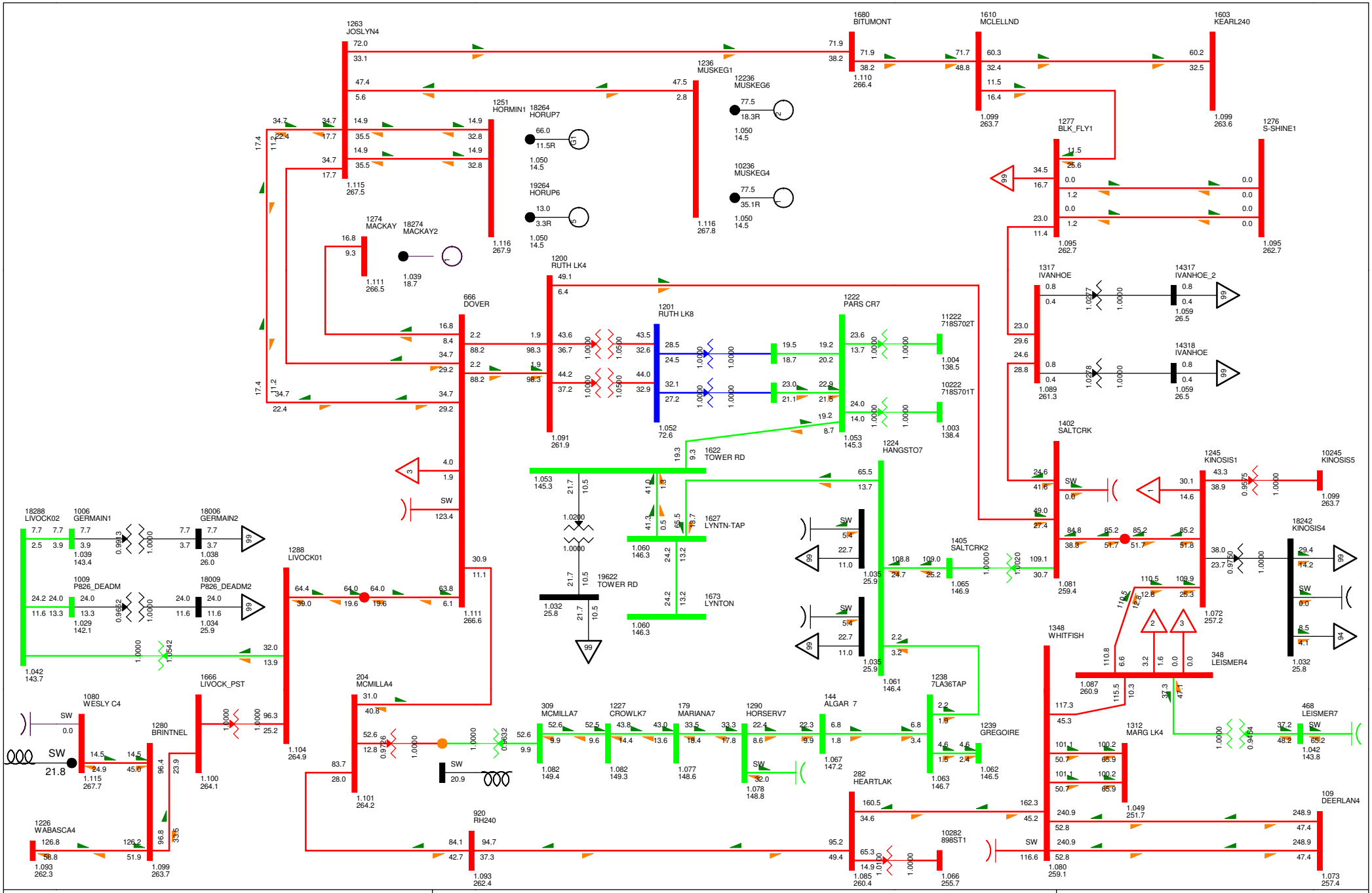

BC - Alberta (IMPORT)778.1 MW

2013 WP EXISTING CASE

FRI, AUG 12 2011 17:53

NW FMM STUDY

Figure C-2013WPEX-1

Bus - VOLTAGE (kV/PU)
Branch - MW/Mvar
Equipment - MW/Mvar
100.0%RATEA
1.120OV 0.950UV
kV: <=34.500 <=69.000 <=138.000 <=240.000 <=500.000 >500.000

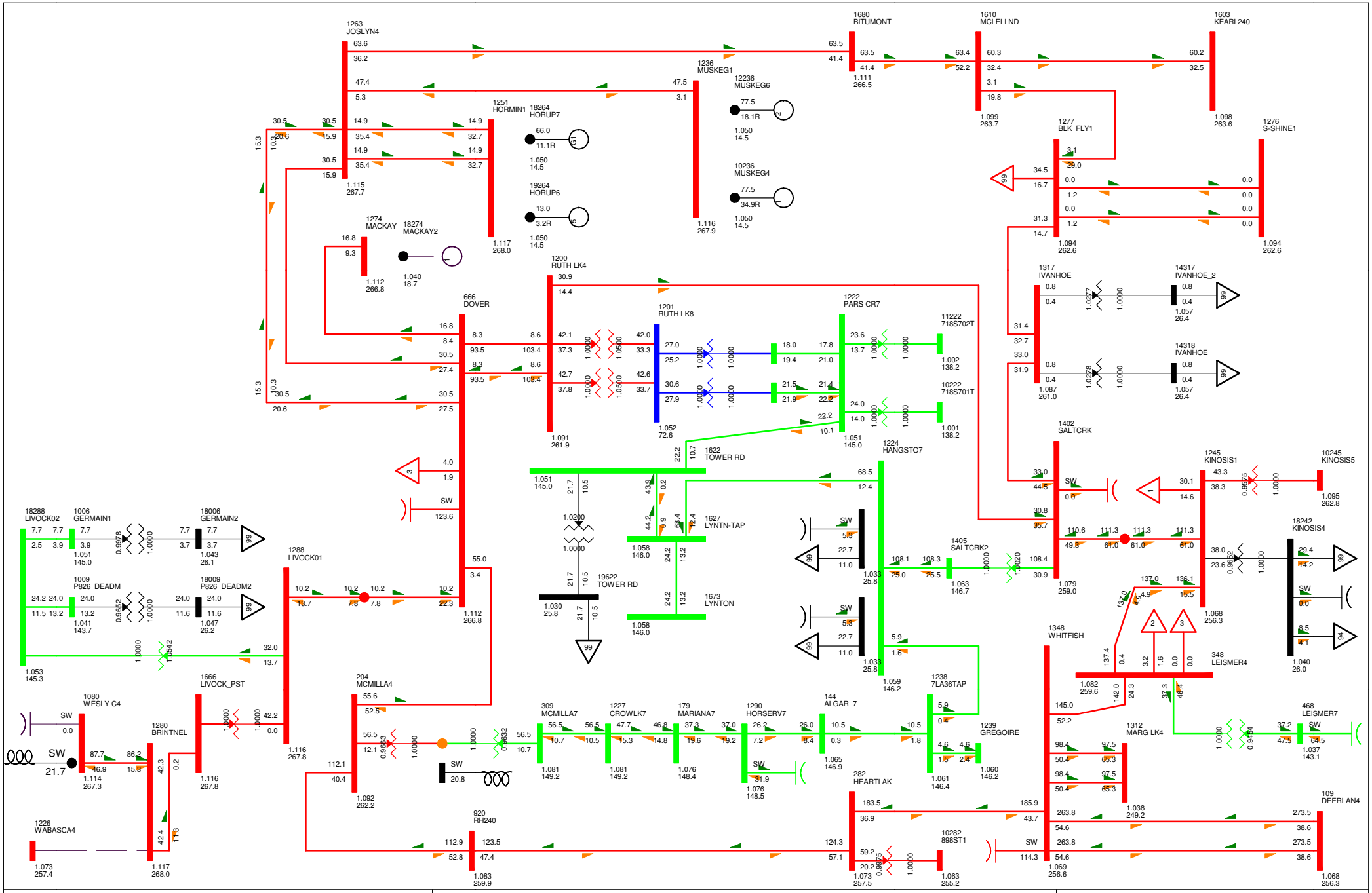

BC - Alberta (IMPORT)789.1 MW

2013 WP EXISTING CASE

FRI, AUG 12 2011 17:54

NW FMM STUDY

Figure C-2013WPEX-2

Bus - VOLTAGE (kV/PU)
Branch - MW/Mvar
Equipment - MW/Mvar
100.0%RATEA
1.120OV 0.950UV
kV: <=34.500 <=69.000 <=138.000 <=240.000 <=500.000 >500.000

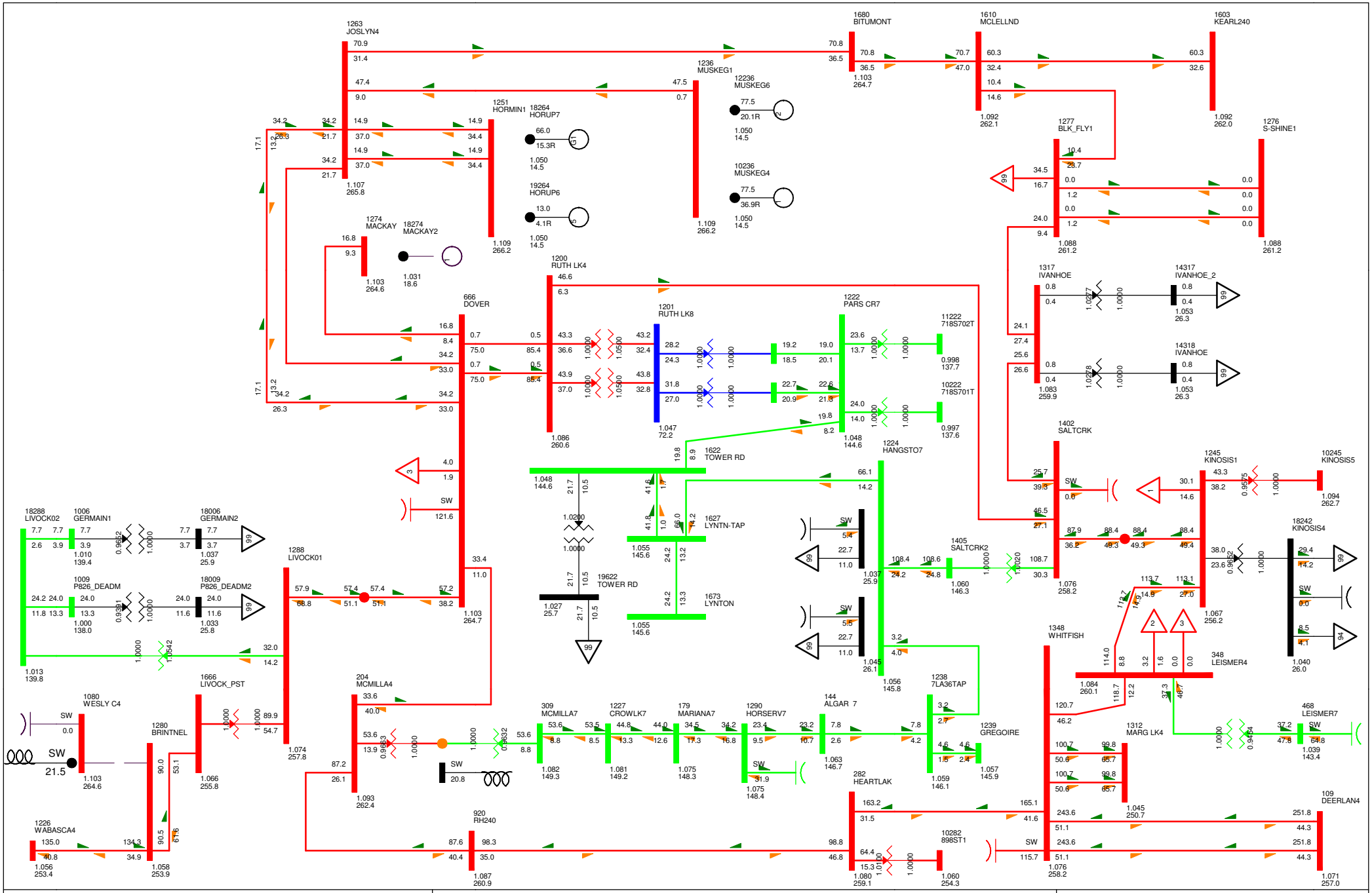

BC - Alberta (IMPORT)779.1 MW

2013 WP EXISTING CASE

FRI, AUG 12 2011 17:54

NW FMM STUDY

Figure C-2013WPEX-3

Bus - VOLTAGE (kV/PU)
Branch - MW/Mvar
Equipment - MW/Mvar
100.0%RATEA
1.120OV 0.950UV
kV: <=34.500 <=69.000 <=138.000 <=240.000 <=500.000 >500.000

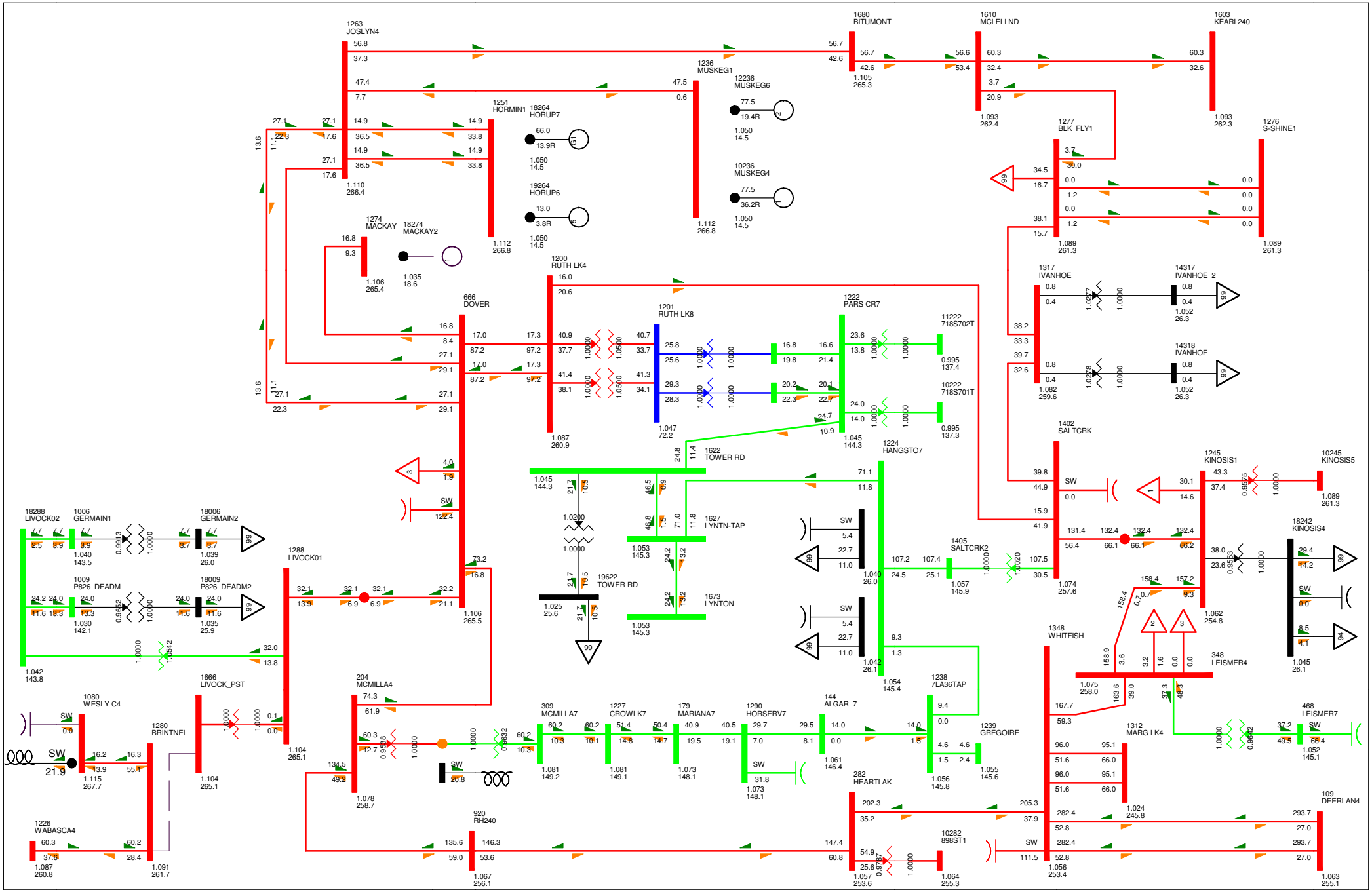

BC - Alberta (IMPORT)788.8 MW

2013 WP EXISTING CASE

FRI, AUG 12 2011 17:54

NW FMM STUDY

Figure C-2013WPEX-4

Bus - VOLTAGE (kV/PU)
Branch - MW/Mvar
Equipment - MW/Mvar
100.0%RATEA
1.120OV 0.950UV
kV: <=34.500 <=69.000 <=138.000 <=240.000 <=500.000 >500.000

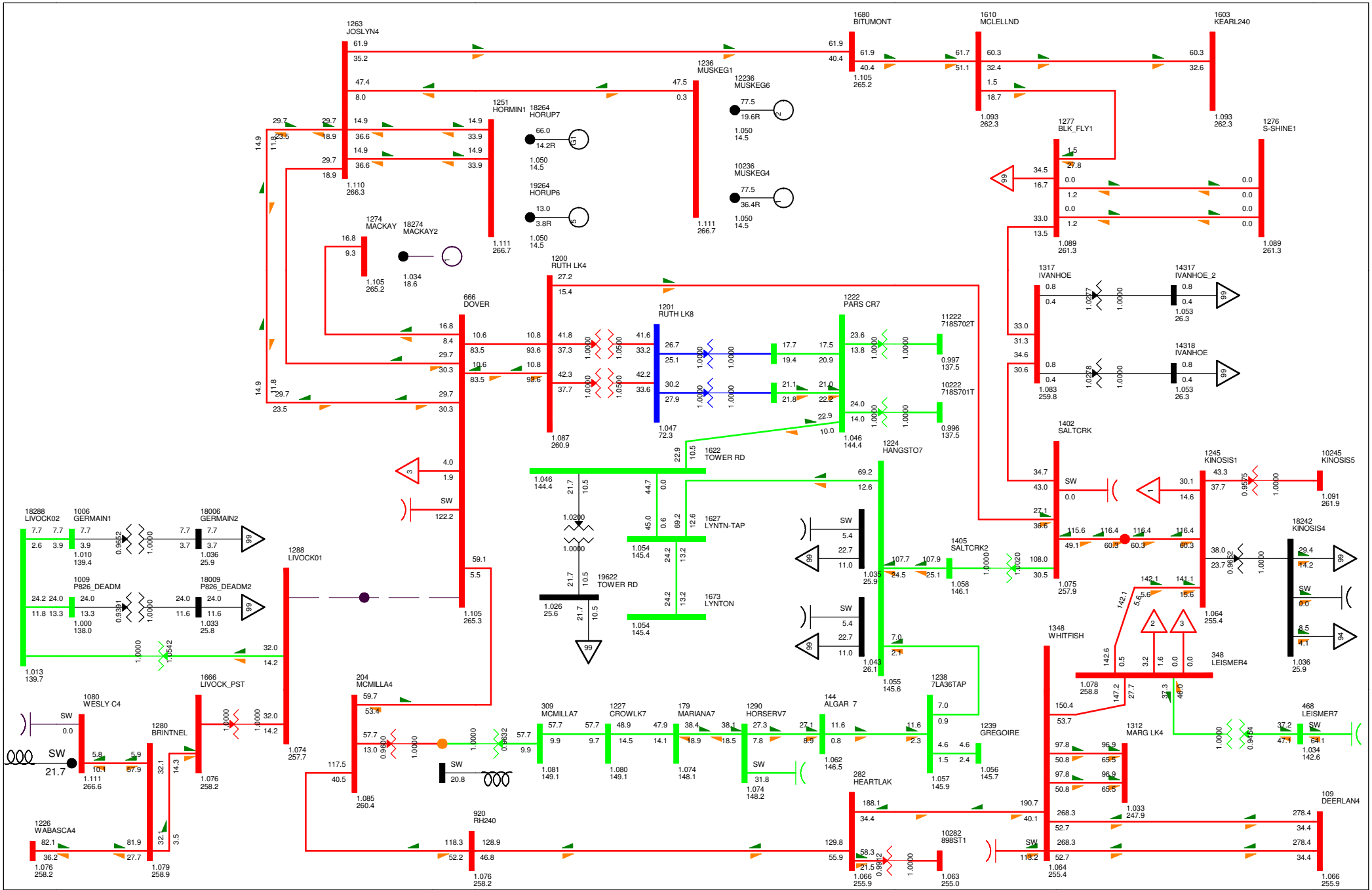

BC - Alberta (IMPORT)783.3 MW

2013 WP EXISTING CASE

FRI, AUG 12 2011 17:54

NW FMM STUDY

Figure C-2013WPEX-5

Bus - VOLTAGE (kV/PU)
Branch - MW/Mvar
Equipment - MW/Mvar
100.0%RATEA
1.120OV 0.950UV
kV: <=34.500 <=69.000 <=138.000 <=240.000 <=500.000 >500.000

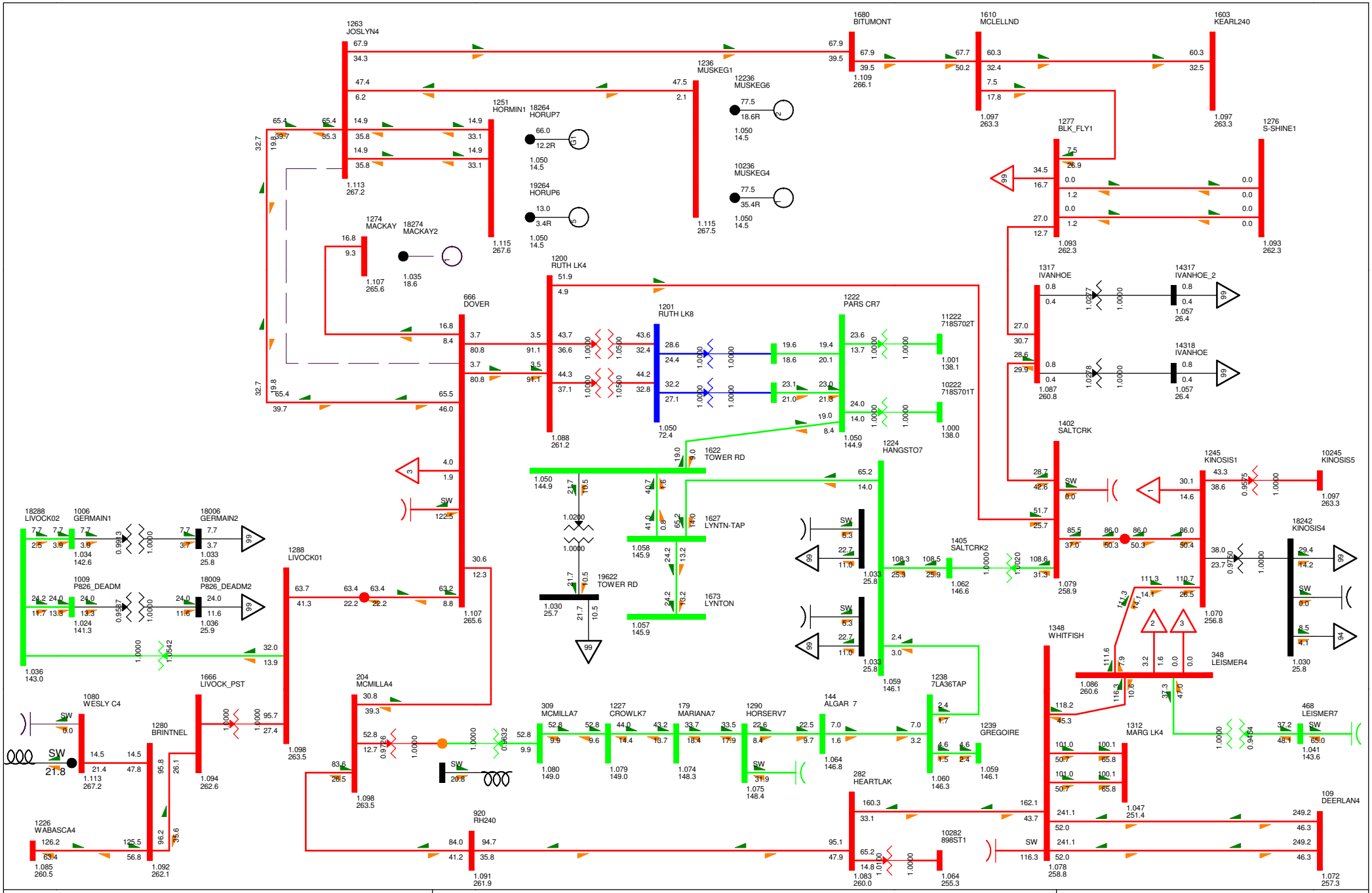

BC - Alberta (IMPORT)778.3 MW

2013 WP EXISTING CASE

FRI, AUG 12 2011 17:54

NW FMM STUDY

Figure C-2013WPEX-6

Bus - VOLTAGE (kV/PU)
Branch - MW/Mvar
Equipment - MW/Mvar
100.0%RATEA
1.120OV 0.950UV
kV: <=34.500 <=69.000 <=138.000 <=240.000 <=500.000 >500.000

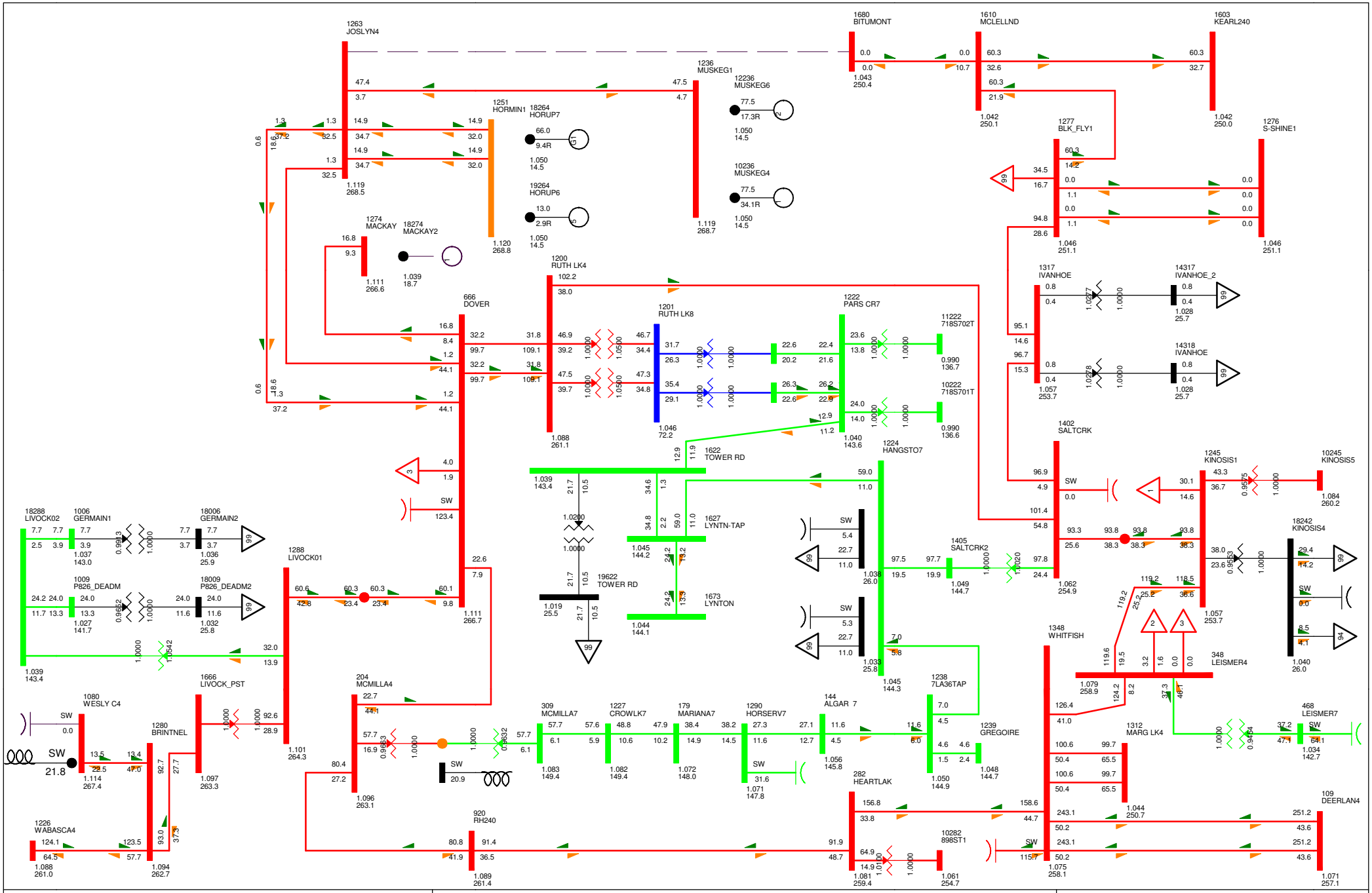
1263 JOSLYN4
1680 BITUMONT
1610 MCLELLND
1603 KEARL240
1236 MUSKEG1
12236 MUSKEG6
10236 MUSKEG4
1251 HORMIN1
18264 HORUP7
19264 HORUP6
1274 MACKAY
18274 MACKAY2
1277 BLK_FLY1
1276 S-SHINE1
1317 IVANHOE
14317 IVANHOE_2
14318 IVANHOE
1200 RUTH LK4
1201 RUTH LK8
666 DOVER
1222 PARS CR7
11222 718S702T
10222 718S701T
1224 HANGSTO7
1622 TOWER RD
19622 TOWER RD
1627 LYNTN-TAP
1673 LYNTON
1402 SALTCRK
1405 SALTCRK2
1245 KINOSIS1
10245 KINOSIS5
18242 KINOSIS4
1348 WHITFISH
348 LEISMER4
468 LEISMER7
1312 MARG LK4
109 DEERLAN4
1238 7LA36TAP
1239 GREGOIRE
144 ALGAR 7
309 MCMILLA7
1227 CROWLK7
179 MARIANA7
1290 HORSERV7
204 MCMILLA4
282 HEARTLAK
920 RH240
10282 898ST1
18288 LIVOCK02
1006 GERMAIN1
18006 GERMAIN2
1009 P826_DEADM
18009 P826_DEADM2
1288 LIVOCK01
1666 LIVOCK_PST
1080 WESLY C4
1280 BRINTNEL
1226 WABASCA4
1101 264.3
1097 263.3
1096 263.1
1088 261.0
1094 262.7
1089 261.4
1081 259.4
1061 254.7
1075 258.1
1071 257.1
1034 142.7
1040 26.0
1084 260.2
1062 254.9
1057 253.7
1046 251.1
1042 250.0
1043 250.4
1050 145.8
1048 144.7
1044 250.7
1079 258.9
1033 25.8
1038 26.0
1049 144.7
1045 144.3
1044 144.1
1045 144.2
1039 143.4
1037 143.0
1036 25.9
1027 141.7
1032 25.8
1028 25.7
1057 253.7
1119 268.5
1120 268.8
1111 266.6
1111 266.7
1088 261.1
1119 268.7
1050 14.5
1046 72.2
1040 143.6
1050 145.8
1056 145.8
1050 144.9
1071 147.8
1083 149.4
1082 149.4
1072 148.0
1096 263.1
1101 264.3
1097 263.3
1114 267.4

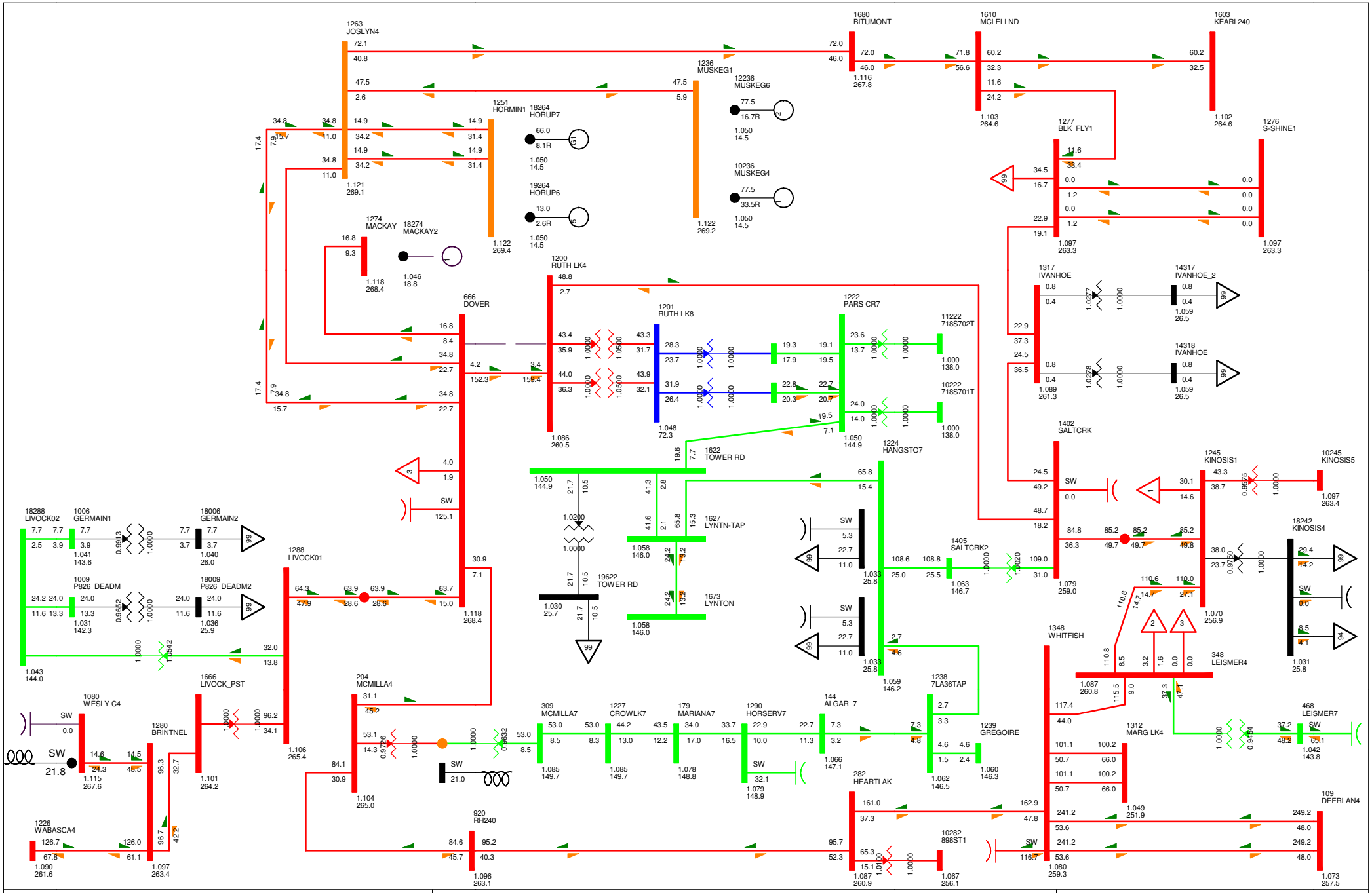

BC - Alberta (IMPORT)778.6 MW

2013 WP EXISTING CASE

FRI, AUG 12 2011 17:54

NW FMM STUDY

Figure C-2013WPEX-8

Bus - VOLTAGE (kV/PU)
Branch - MW/Mvar
Equipment - MW/Mvar
100.0%RATEA
1.120OV 0.950UV
kV: <=34.500 <=69.000 <=138.000 <=240.000 <=500.000 >500.000

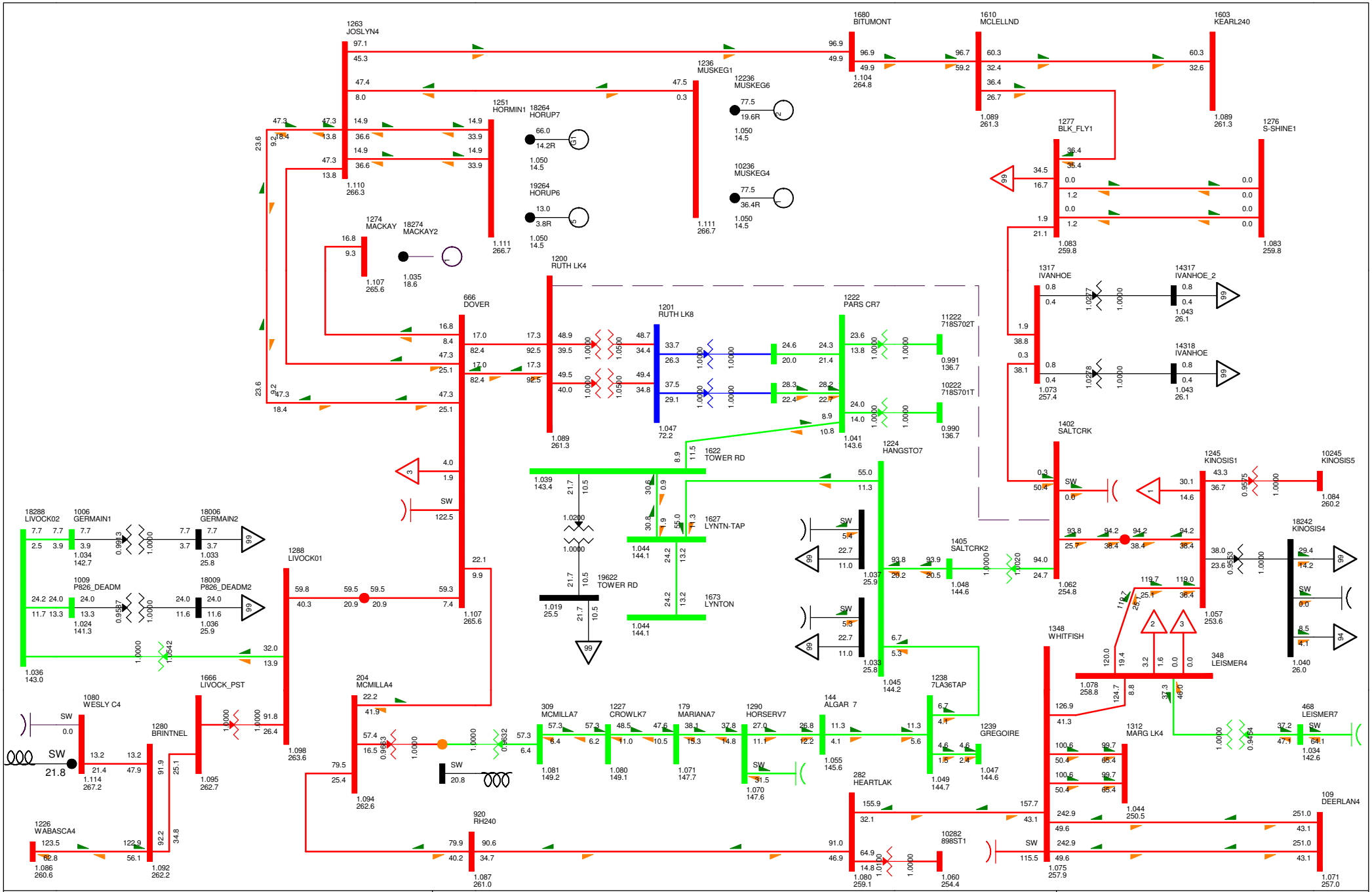

BC - Alberta (IMPORT)778.9 MW

2013 WP EXISTING CASE

FRI, AUG 12 2011 17:54

NW FMM STUDY

Figure C-2013WPEX-9

Bus - VOLTAGE (kV/PU)
Branch - MW/Mvar
Equipment - MW/Mvar
100.0%RATEA
1.120OV 0.950UV
kV: <=34.500 <=69.000 <=138.000 <=240.000 <=500.000 >500.000

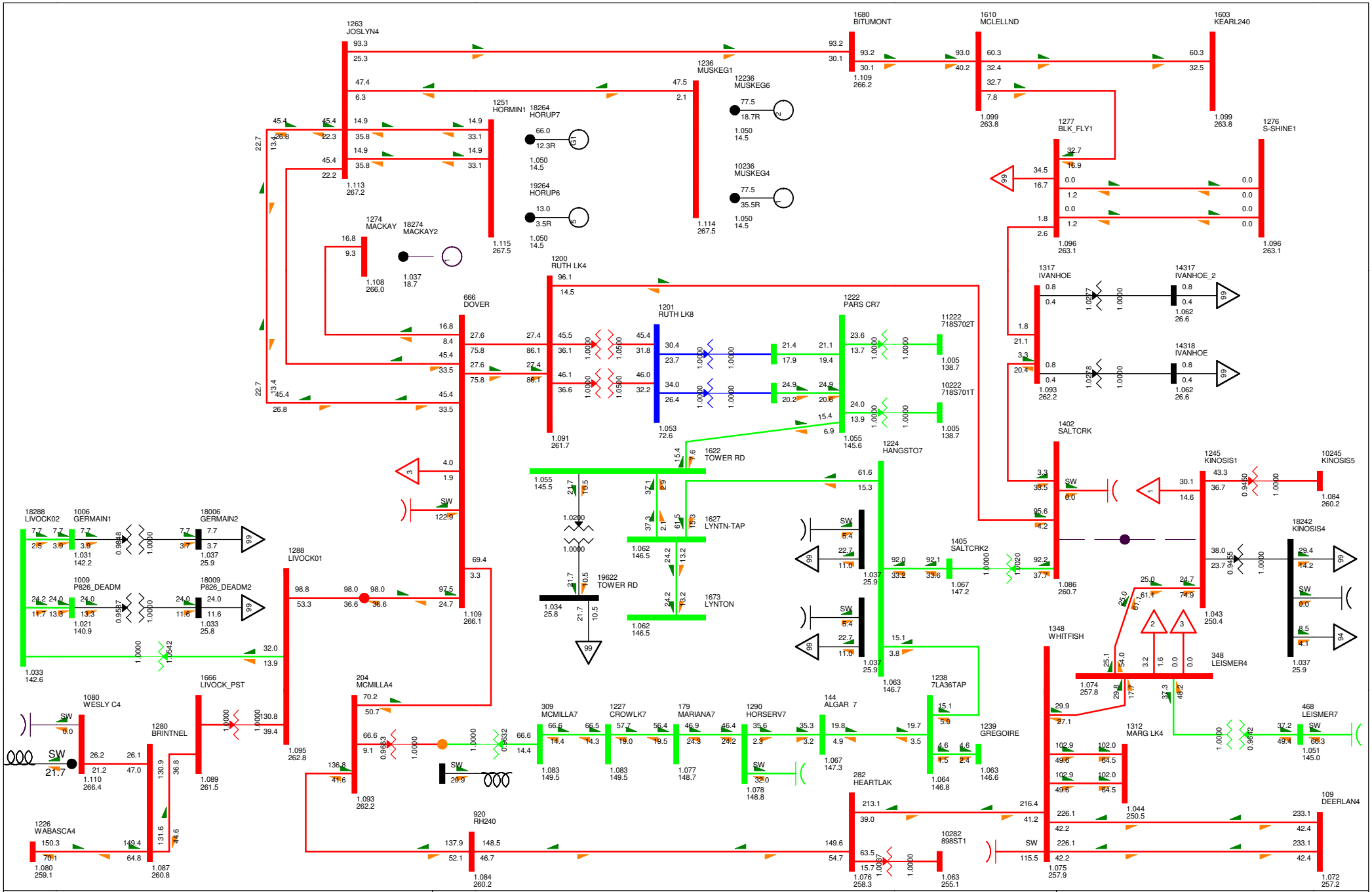

BC - Alberta (IMPORT)784.2 MW

2013 WP EXISTING CASE

FRI, AUG 12 2011 17:54

NW FMM STUDY

Figure C-2013WPEX-10

Bus - VOLTAGE (kV/PU)
Branch - MW/Mvar
Equipment - MW/Mvar
100.0%RATEA
1.120OV 0.950UV
kV: <=34.500 <=69.000 <=138.000 <=240.000 <=500.000 >500.000

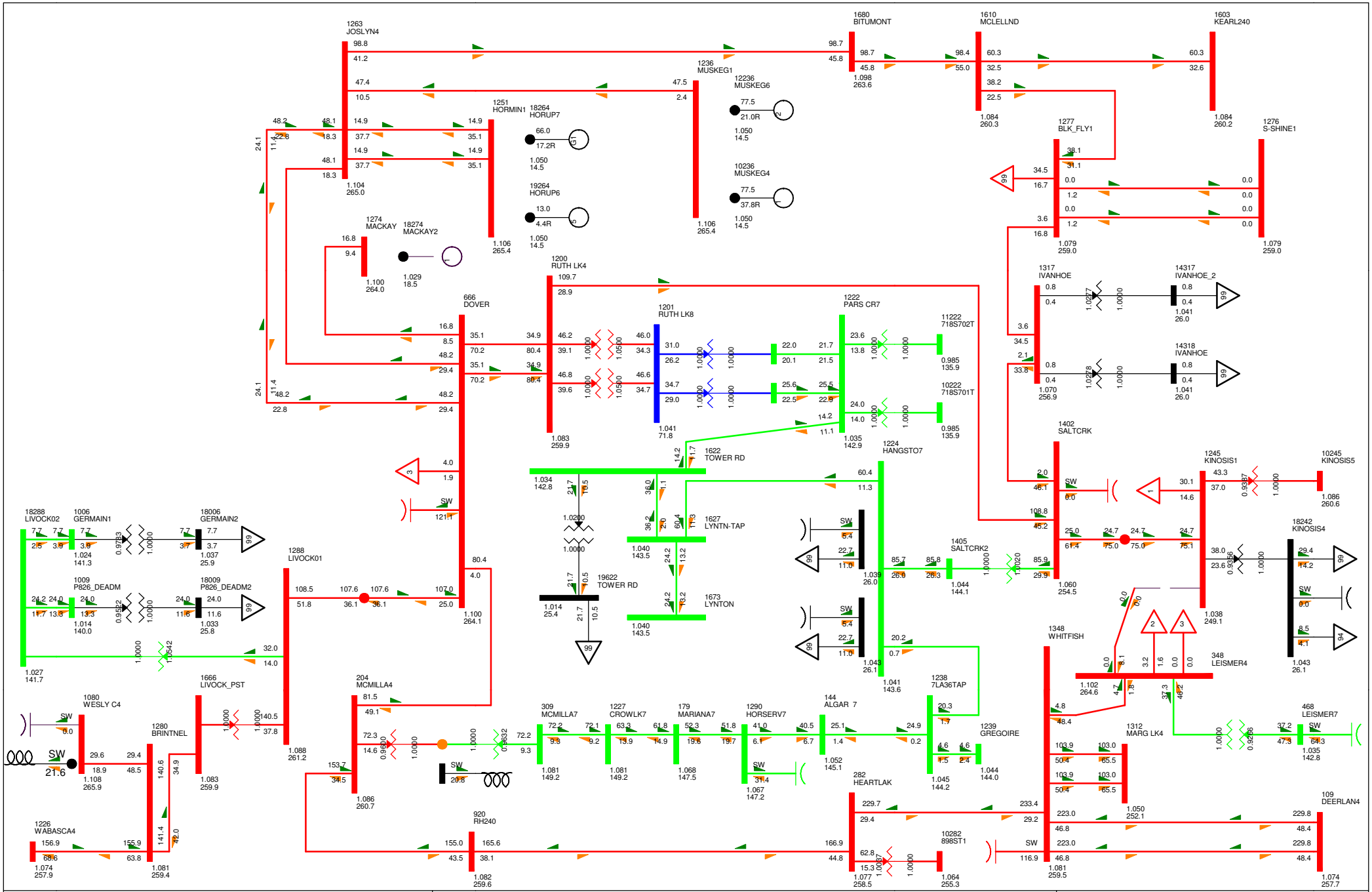
1263 JOSLYN4
1680 BITUMONT
1610 MCLELLND
1603 KEARL240
1236 MUSKEG1
12236 MUSKEG6
10236 MUSKEG4
1251 HORMIN1
18264 HORUP7
19264 HORUP6
1274 MACKAY
18274 MACKAY2
1277 BLK_FLY1
1276 S-SHINE1
1317 IVANHOE
14317 IVANHOE_2
14318 IVANHOE
1200 RUTH LK4
1201 RUTH LK8
666 DOVER
1222 PARS CR7
11222 718S702T
10222 718S701T
1224 HANGSTO7
1622 TOWER RD
19622 TOWER RD
1627 LYNTN-TAP
1673 LYNTON
1402 SALTCRK
1405 SALTCRK2
1245 KINOSIS1
10245 KINOSIS5
18242 KINOSIS4
1348 WHITFISH
348 LEISMER4
468 LEISMER7
1312 MARG LK4
109 DEERLAN4
1238 7LA36TAP
1239 GREGOIRE
144 ALGAR 7
282 HEARTLAK
10282 898ST1
920 RH240
1226 WABASCA4
1280 BRINTNEL
1080 WESLY C4
1666 LIVOCK_PST
1288 LIVOCK01
18288 LIVOCK02
1006 GERMAIN1
18006 GERMAIN2
1009 P826_DEADM
18009 P826_DEADM2
204 MCMILLA4
309 MCMILLA7
1227 CROWLK7
179 MARIANA7
1290 HORSERV7
BC - Alberta (IMPORT)787.5 MW
2013 WP EXISTING CASE
FRI, AUG 12 2011 17:54
NW FMM STUDY
Figure C-2013WPEX-11
Bus - VOLTAGE (kV/PU)
Branch - MW/Mvar
Equipment - MW/Mvar
100.0%RATEA
1.120OV 0.950UV
kV: <=34.500 <=69.000 <=138.000 <=240.000 <=500.000 >500.000

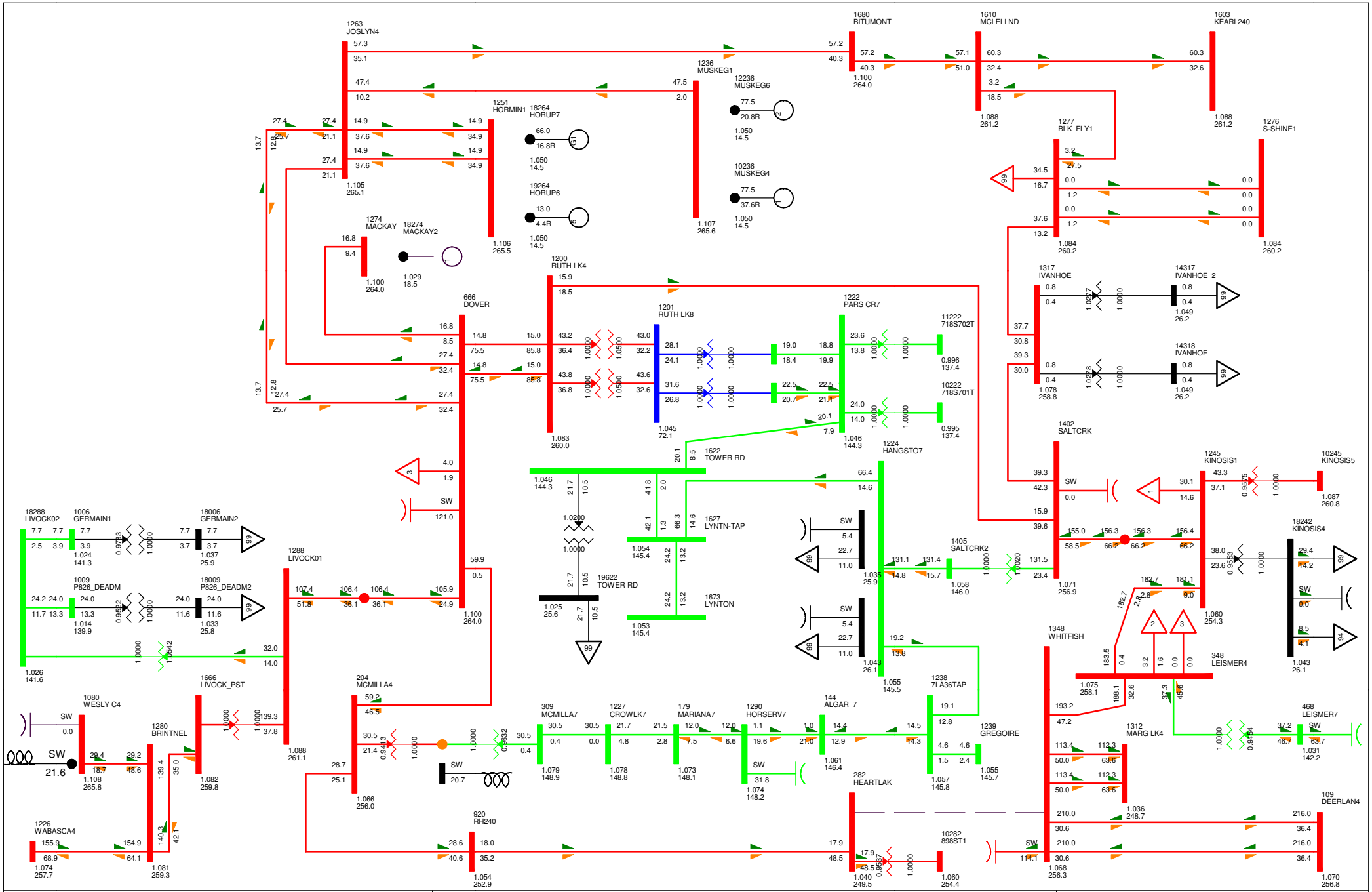

BC - Alberta (IMPORT)800.7 MW

2013 WP EXISTING CASE

FRI, AUG 12 2011 17:54

NW FMM STUDY

Figure C-2013WPEX-12

Bus - VOLTAGE (kV/PU)
Branch - MW/Mvar
Equipment - MW/Mvar
100.0%RATEA
1.120OV 0.950UV
kV: <=34.500 <=69.000 <=138.000 <=240.000 <=500.000 >500.000

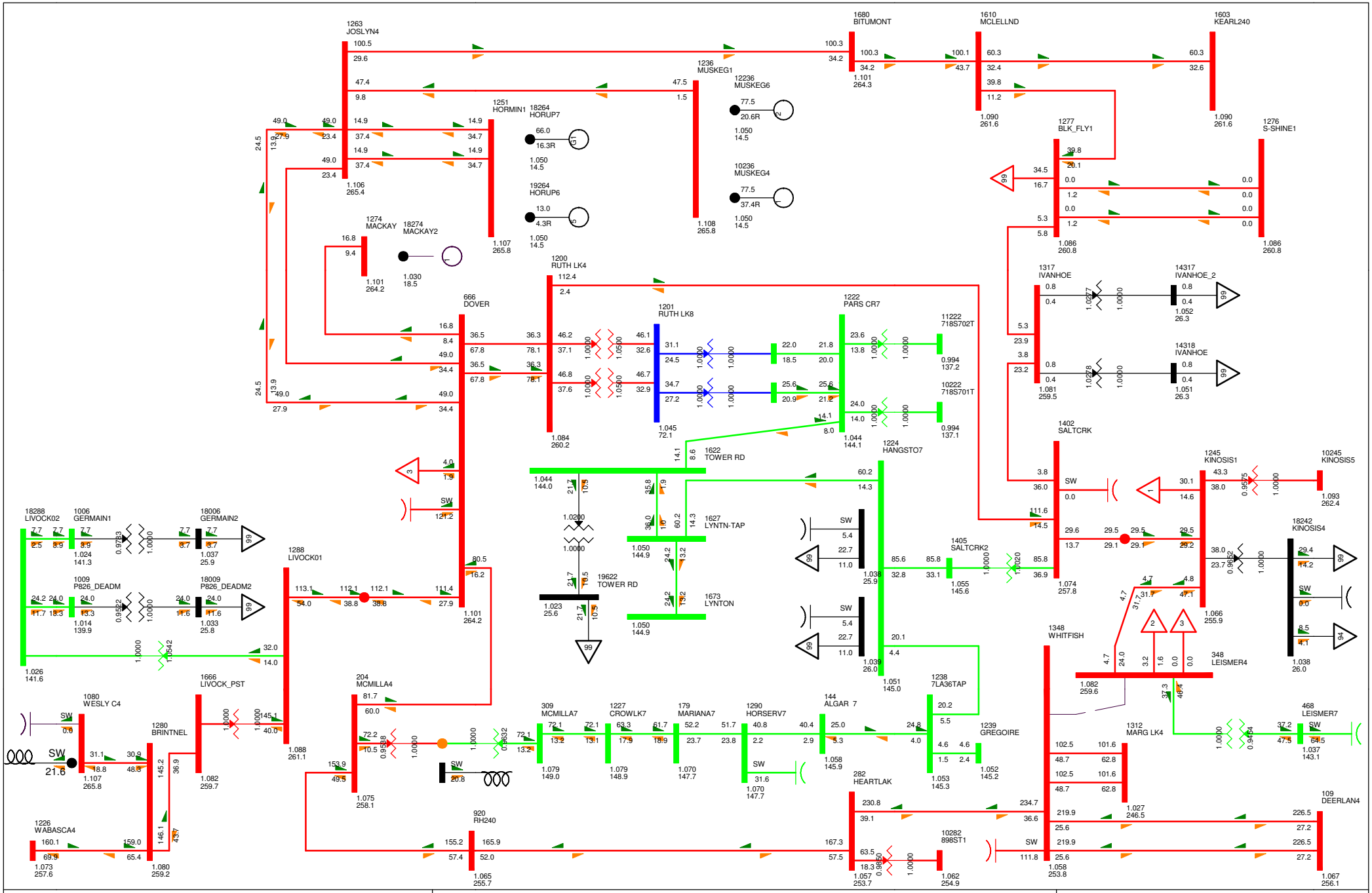

BC - Alberta (IMPORT)789.5 MW

2013 WP EXISTING CASE

FRI, AUG 12 2011 17:54

NW FMM STUDY

Figure C-2013WPEX-13

Bus - VOLTAGE (kV/PU)
Branch - MW/Mvar
Equipment - MW/Mvar
100.0%RATEA
1.120OV 0.950UV
kV: <=34.500 <=69.000 <=138.000 <=240.000 <=500.000 >500.000

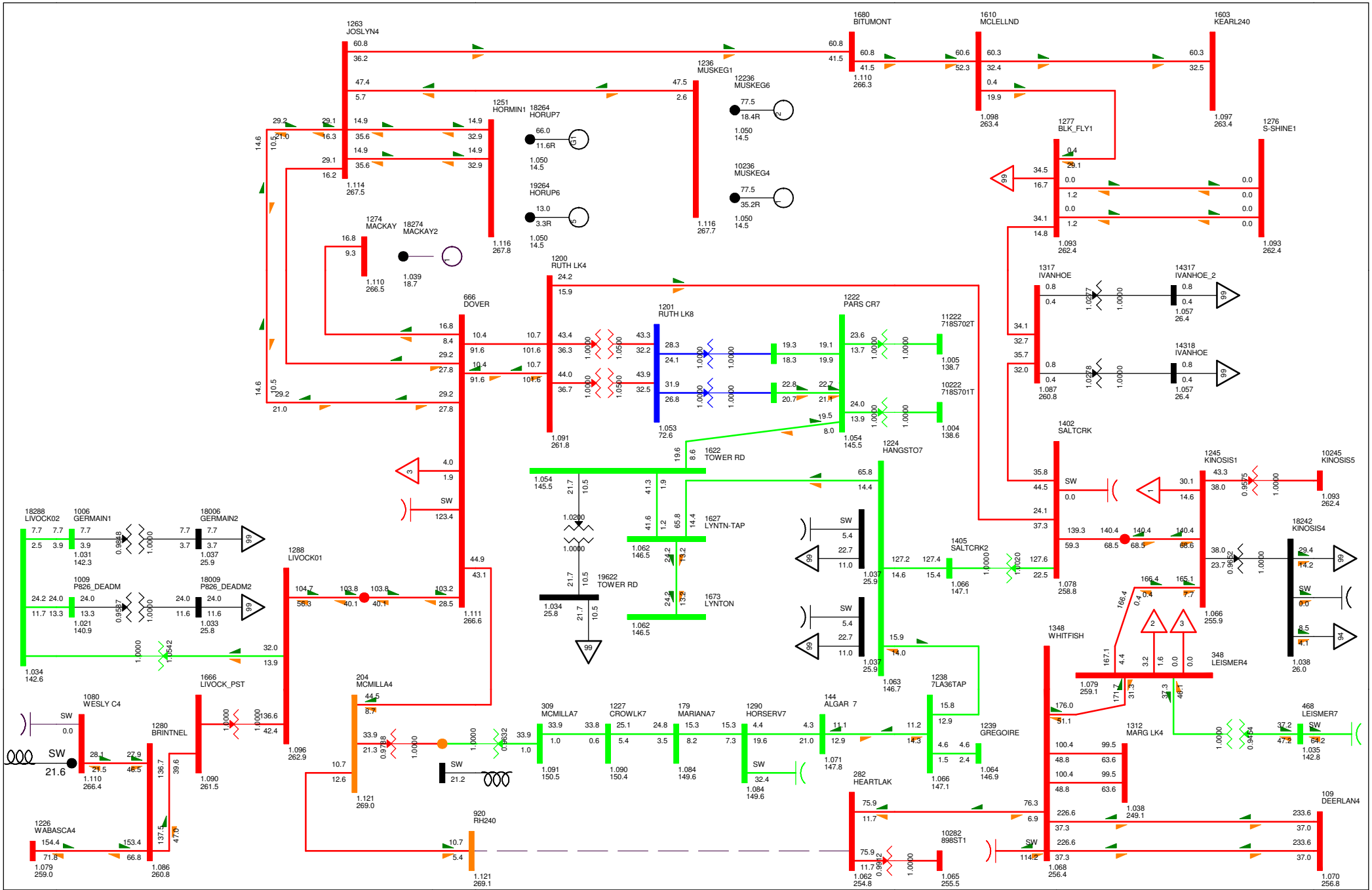

BC - Alberta (IMPORT)782.8 MW

2013 WP EXISTING CASE

FRI, AUG 12 2011 17:54

NW FMM STUDY

Figure C-2013WPEX-14

Bus - VOLTAGE (kV/PU)
Branch - MW/Mvar
Equipment - MW/Mvar
100.0%RATEA
1.120OV 0.950UV
kV: <=34.500 <=69.000 <=138.000 <=240.000 <=500.000 >500.000

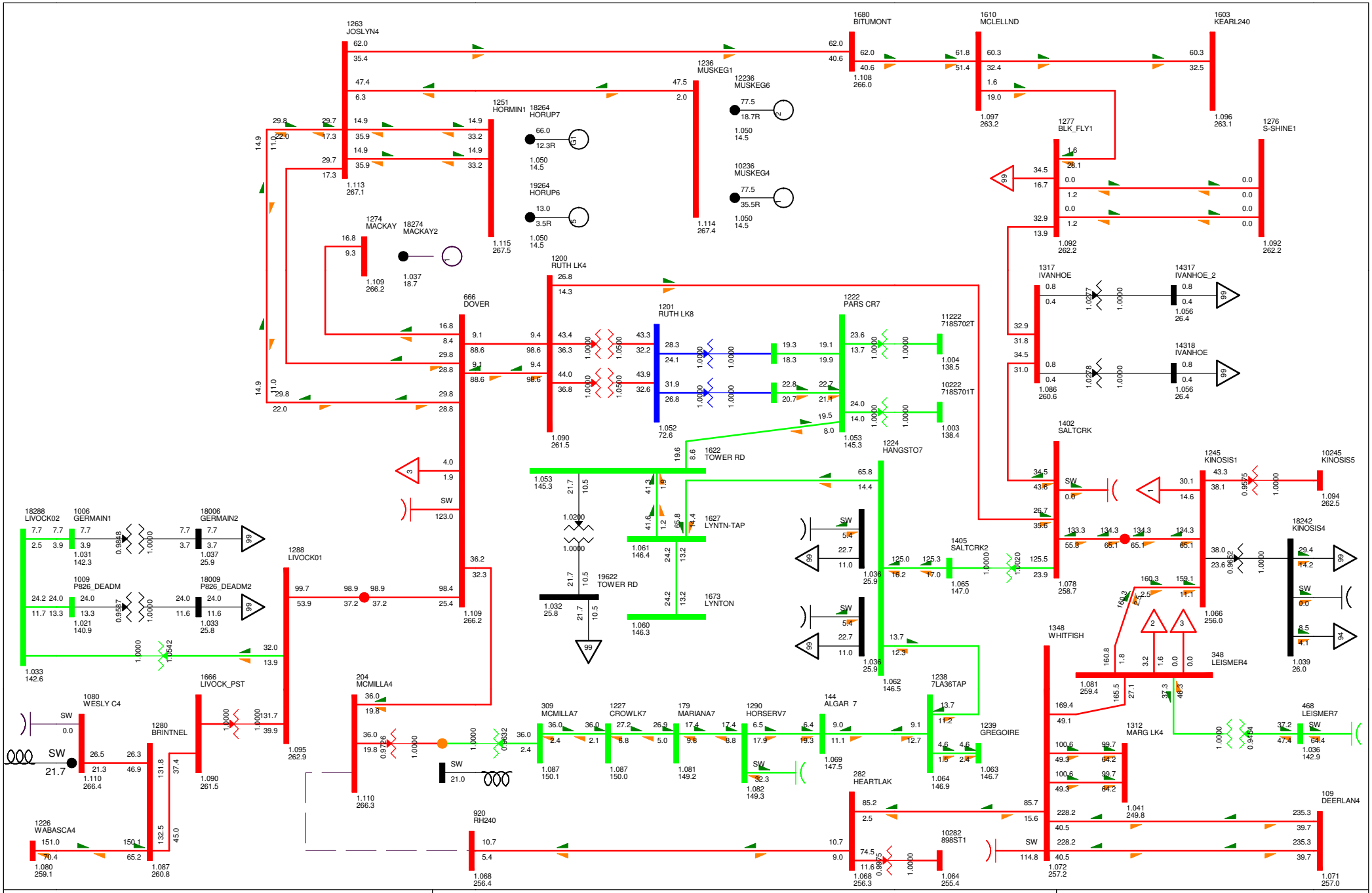

BC - Alberta (IMPORT)781.5 MW

2013 WP EXISTING CASE

FRI, AUG 12 2011 17:54

NW FMM STUDY

Figure C-2013WPEX-15

Bus - VOLTAGE (kV/PU)
Branch - MW/Mvar
Equipment - MW/Mvar
100.0%RATEA
1.120OV 0.950UV
kV: <=34.500 <=69.000 <=138.000 <=240.000 <=500.000 >500.000

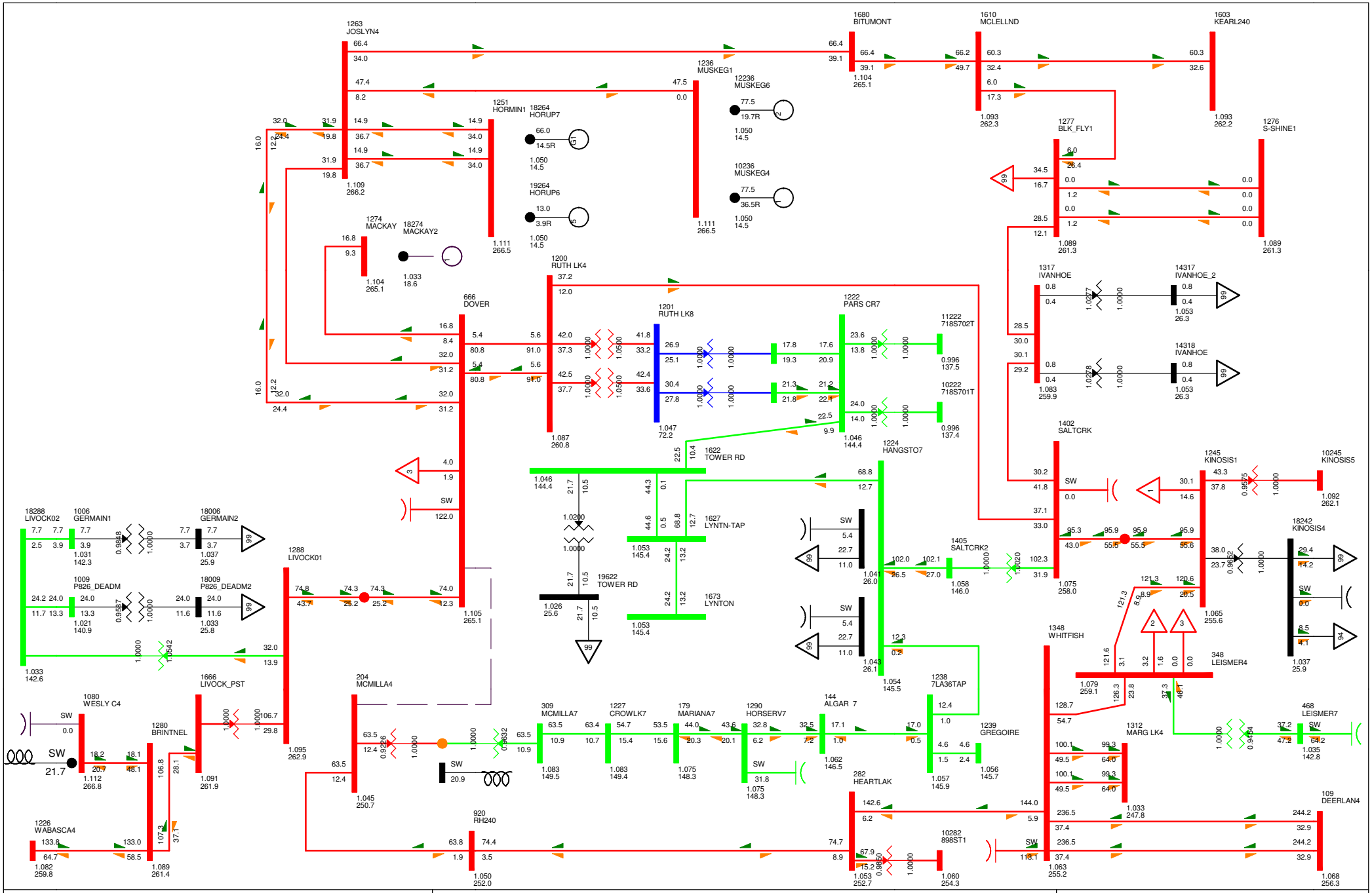

BC - Alberta (IMPORT)780.1 MW

2013 WP EXISTING CASE

FRI, AUG 12 2011 17:54

NW FMM STUDY

Figure C-2013WPEX-16

Bus - VOLTAGE (kV/PU)
Branch - MW/Mvar
Equipment - MW/Mvar
100.0%RATEA
1.120OV 0.950UV
kV: <=34.500 <=69.000 <=138.000 <=240.000 <=500.000 >500.000

Table C-3 Power Flow Analysis Summary- 2015 Summer Peak Existing System

Figure Name	Contingency	Thermal Violation	Voltage Violation
Figure C-2015SP_EX-1	Base Case (N - 0)	None	None
Figure C-2015SP_EX-2	Open 9L56 240kV line (WABASCA 720S to Brintnell 876S)	None	None
Figure C-2015SP_EX-3	Open 9L15 240kV line (Wesley Creek 834S to Livock 939S)	None	None
Figure C-2015SP_EX-4	Open 9L10 240kV line (Brintnell 876S to Livock 939S)	None	None
Figure C-2015SP_EX-5	Open 9L57 240kV line (Livock 939S to Birchwood Creek 960S)	None	None
Figure C-2015SP_EX-6	Open 9L74 240kV line (Birchwood Creek 960S to Dover 888S)*	None	11.6% Post Transient Voltage Deviation at MRCP and Livock*
Figure C-2015SP_EX-7	Open 9L09 240kV line (Dover 888S to Joslyn Creek 849S)	None	None
Figure C-2015SP_EX-8	Open 9L08 240kV line (Ells River to to Dover 888S)*	None	None
Figure C-2015SP_EX-9	Open 9L76 240kV line (Ells River to Joslyn Creek 849S)	None	None
Figure C-2015SP_EX-10	Open 9L32 240kV line (Joslyn Creek 849S to Bitumont 941S)	None	None
Figure C-2015SP_EX-11	Open 9L01 240kV line (Dover 888S to Ruth Lake 848S)	None	None
Figure C-2015SP_EX-12	Open 9L23 240kV line (Ruth Lake 848S to Salt Creek 977S)	None	None
Figure C-2015SP_EX-13	Open 9L990 240kV line (Salt Creek 977S to Kinosis 856S)	None	None
Figure C-2015SP_EX-14	Open 9L990 240kV line (Kinosis 856S to Leismer 72S)	None	None

Figure C-2015SP_EX-15	Open 9L930 240kV line (Leismer 72S to Whitefish Lake 825S)	None	None
Figure C-2015SP_EX-16	Open 9L22 240kV line (Whitefish Lake 825S to Heart Lake 898S)	None	None
Figure C-2015SP_EX-17	Open 9L47 240kV line (Heart Lake 898S to RoundHill POD)	None	None
Figure C-2015SP_EX-18	Open 9L55 240kV line (RoundHill POD to McMillan 885S)	None	None
Figure C-2015SP_EX-19	Open 9L07 240kV line (McMillan 885S TO Dover 888S)	None	None
Figure C-2015SP_EX-20	Open 9L58 240kV line (Ruth Lake 848S to Thickwood 951S)	None	None
Figure C-2015SP_EX-21	Open 9L68 240kV line (Thickwood 951S TO Dover 888S)	None	None
Figure C-2015SP_EX-22	Open 9L30 240kV line (McMillan 885S TO Dover 888S)	None	None

* BirchWood Creek 960S represents NW FMM South Substation in power flow diagrams
* Ells River 2079S represents NW FMM North Substation in power flow diagrams
* MRCP (MacKay River Commercial Project) is assumed to be connected to NW FMM South in powe flow analysis

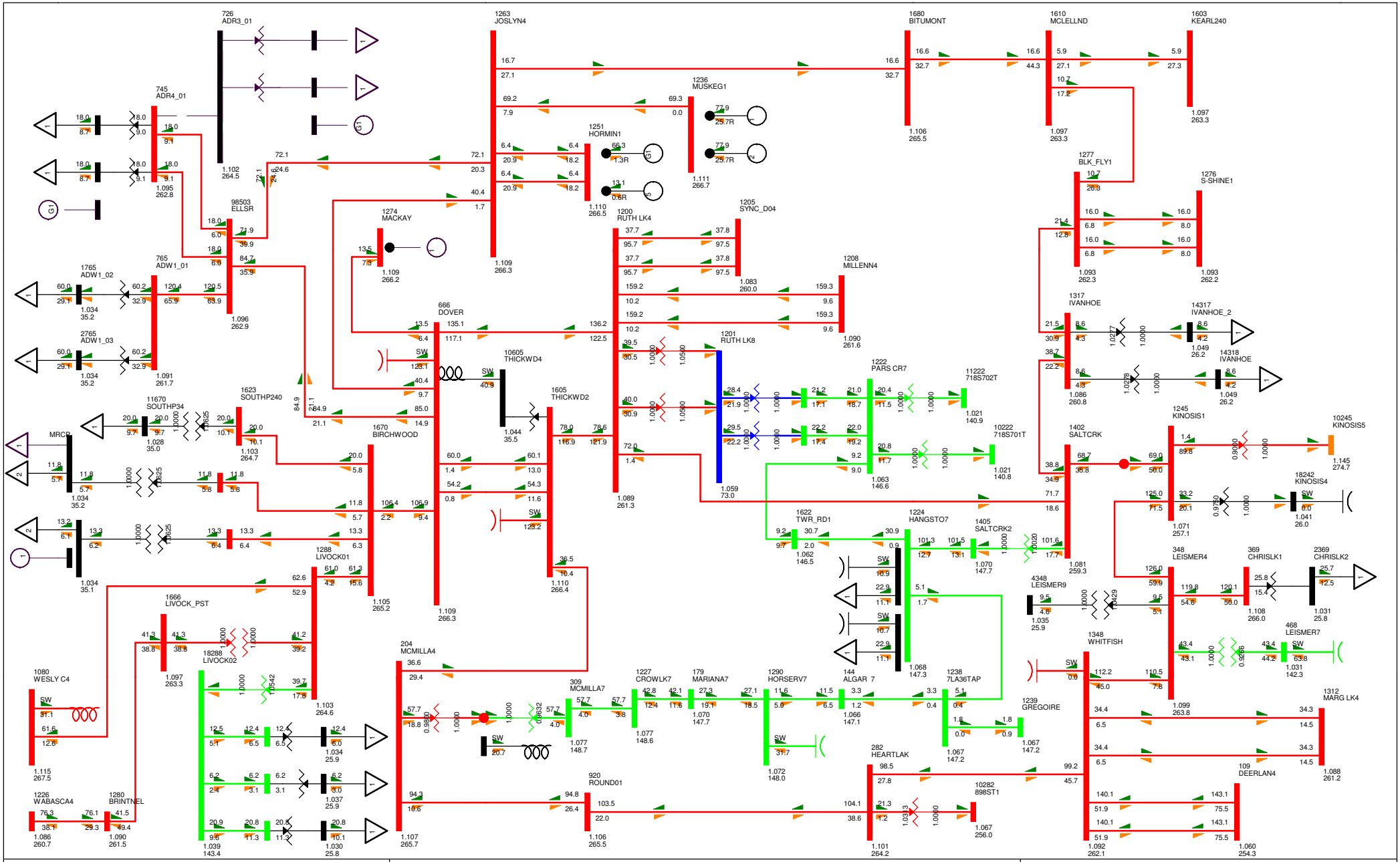
726 ADR3_01
745 ADR4_01
1263 JOSLYN4
1680 BITUMONT
1610 MCLELLND
1603 KEARL240
1236 MUSKEG1
1251 HORMIN1
1277 BLK_FLY1
1276 S-SHINE1
98503 ELLSR
1274 MACKAY
1200 RUTH LK4
1205 SYNC_D04
1765 ADW1_02
765 ADW1_01
2765 ADW1_03
666 DOVER
1208 MILLENN4
1317 IVANHOE
14317 IVANHOE_2
14318 IVANHOE
1201 RUTH LK8
1222 PARS CR7
11222 718S702T
10222 718S701T
11670 SOUTHP34
1623 SOUTHP240
10605 THICKWD4
1605 THICKWD2
1670 BIRCHWOOD
MRCB
1402 SALTCRK
1245 KINOSIS1
10245 KINOSIS5
18242 KINOSIS4
1622 TWR_RD1
1224 HANGSTO7
1405 SALTCRK2
4348 LEISMER9
348 LEISMER4
369 CHRISLK1
2369 CHRISLK2
468 LEISMER7
1288 LIVOCK01
1666 LIVOCK_PST
18288 LIVOCK02
204 MCMILLA4
309 MCMILLA7
1227 CROWLK7
179 MARIANA7
1290 HORSERV7
144 ALGAR 7
1238 7LA36TAP
1239 GREGOIRE
1348 WHITFISH
1312 MARG LK4
109 DEERLAN4
1080 WESLY C4
1226 WABASCA4
1280 BRINTNEL
920 ROUND01
282 HEARTLAK
10282 898ST1
BC - Alberta (IMPORT)751.3 MW
TASMO MODEL; OUTPUT GENERATED 2010-03-01 14:32:47
SWINGBUS 1520 FOR FC-2009-S-2015-10-31:14:14--1--1-0-0
TUE, JUL 26 2011 11:32
2015 NW FMM STUDY
Figure C-2015SP_EX-1
Bus - VOLTAGE (kV/PU)
Branch - MW/Mvar
Equipment - MW/Mvar
100.0%RATEB
1.120OV 0.950UV
kV: <=34.500 <=69.000 <=138.000 <=240.000 <=500.000 >500.000

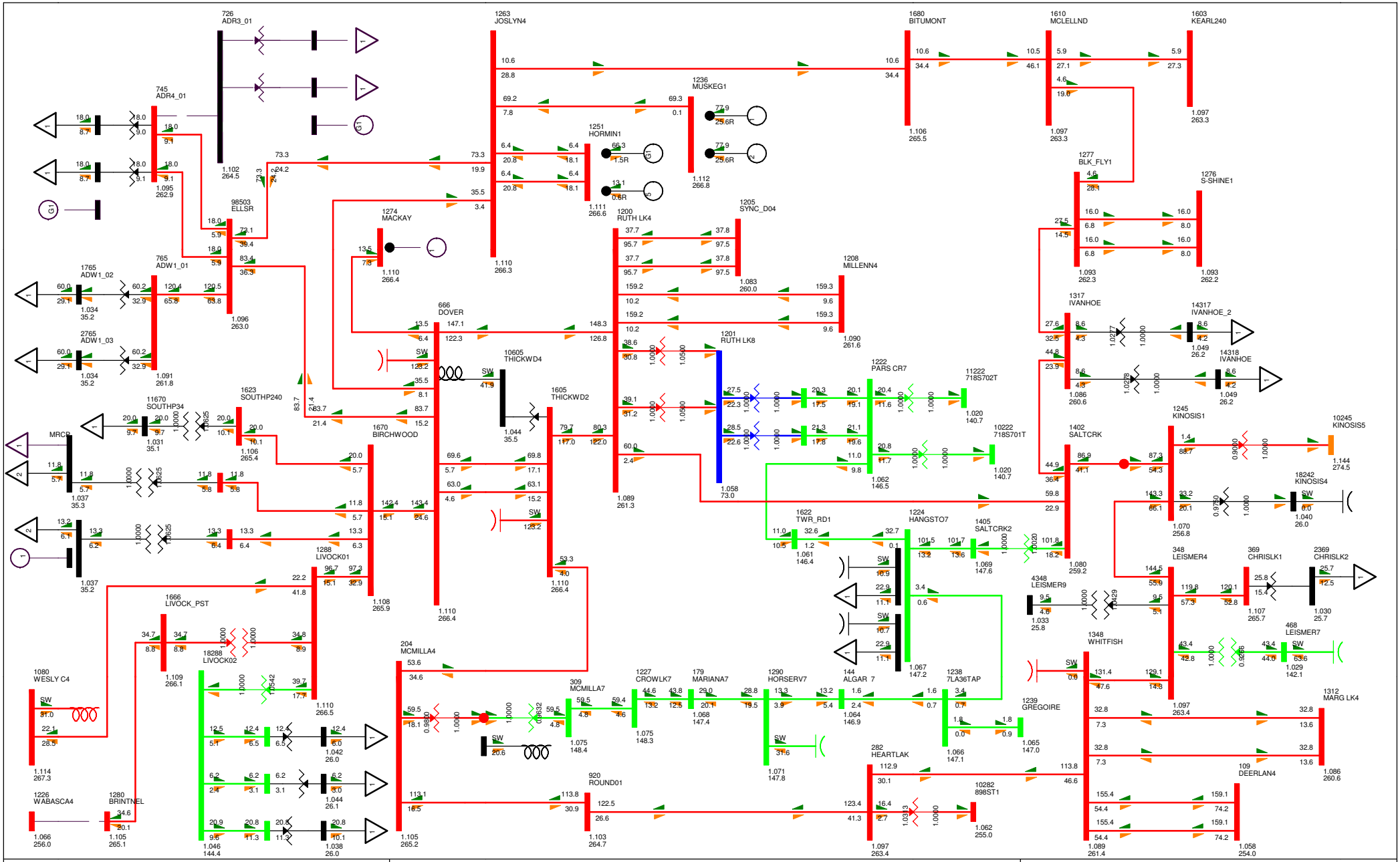
726 ADR3_01
745 ADR4_01
1263 JOSLYN4
1680 BITUMONT
1610 MCLELLND
1603 KEARL240
1236 MUSKEG1
1251 HORMIN1
1277 BLK_FLY1
1276 S-SHINE1
98503 ELLSR
1274 MACKAY
1205 SYNC_D04
1200 RUTH LK4
1208 MILLENN4
1765 ADW1_02
765 ADW1_01
2765 ADW1_03
1317 IVANHOE
14317 IVANHOE_2
14318 IVANHOE
666 DOVER
1201 RUTH LK8
1222 PARS CR7
11222 718S702T
10222 718S701T
1623 SOUTHP240
11670 SOUTHP34
10605 THICKWD4
1605 THICKWD2
1670 BIRCHWOOD
1402 SALTCRK
1245 KINOSIS1
10245 KINOSIS5
18242 KINOSIS4
MRCD
1622 TWR_RD1
1224 HANGSTO7
1405 SALTCRK2
348 LEISMER4
369 CHRISLK1
2369 CHRISLK2
4348 LEISMER9
468 LEISMER7
1348 WHITFISH
1288 LIVOCK01
1666 LIVOCK_PST
18288 LIVOCK02
204 MCMILLA4
309 MCMILLA7
1227 CROWLK7
179 MARIANA7
1290 HORSERV7
144 ALGAR 7
1238 7LA36TAP
1239 GREGOIRE
1312 MARG LK4
109 DEERLAN4
1080 WESLY C4
1226 WABASCA4
1280 BRINTNEL
282 HEARTLAK
920 ROUND01
10282 898ST1
1062 255.0
1058 254.0
1097 263.4
1089 261.4
1086 260.6
1066 147.1
1065 147.0
1064 146.9
1075 148.4
1068 147.4
1067 147.2
1069 147.6
1061 146.4
1062 146.5
1058 73.0
1090 261.6
1089 261.3
1083 260.0
1111 266.6
1112 266.8
1110 266.3
1102 264.5
1095 262.9
1096 263.0
1093 262.3
1093 262.2
1086 260.6
1049 26.2
1049 26.2
1027
1000
1070 256.8
1040 26.0
1030 25.7
1029 142.1
1107 265.7
1097 263.4
1144 274.5
1033 25.8
1029
1020 140.7
1020 140.7
1031 35.1
1034 35.2
1034 35.2
1037 35.3
1037 35.2
1091 261.8
1106 265.4
1108 265.9
1110 266.5
1109 266.1
1114 267.3
1105 265.1
1066 256.0
1046 144.4
1044 26.1
1042 26.0
1038 26.0
1105 265.2
1103 264.7
1075 148.3
1071 147.8
1110 266.4
1044 35.5
1110 266.4
1111 266.6
1110 266.3
1106 265.5
1097 263.3
1095 262.9
1091 261.8
1096 263.0
1034 35.2
1034 35.2
1037 35.3
1037 35.2
1108 265.9
1110 266.5
1109 266.1
1114 267.3
1105 265.1
1066 256.0
1046 144.4
1044 26.1
1042 26.0
1038 26.0
1105 265.2
1103 264.7
1075 148.3
1071 147.8
1110 266.4
1044 35.5
1110 266.4
1111 266.6
1110 266.3
1106 265.5
1097 263.3
1095 262.9
1091 261.8
1096 263.0
1093 262.3
1093 262.2
1086 260.6
1049 26.2
1049 26.2
1027
1000
1070 256.8
1040 26.0
1030 25.7
1029 142.1
1107 265.7
1097 263.4
1144 274.5
1033 25.8
1029
1020 140.7
1020 140.7
1031 35.1
1034 35.2
1034 35.2
1037 35.3
1037 35.2
1091 261.8
1106 265.4

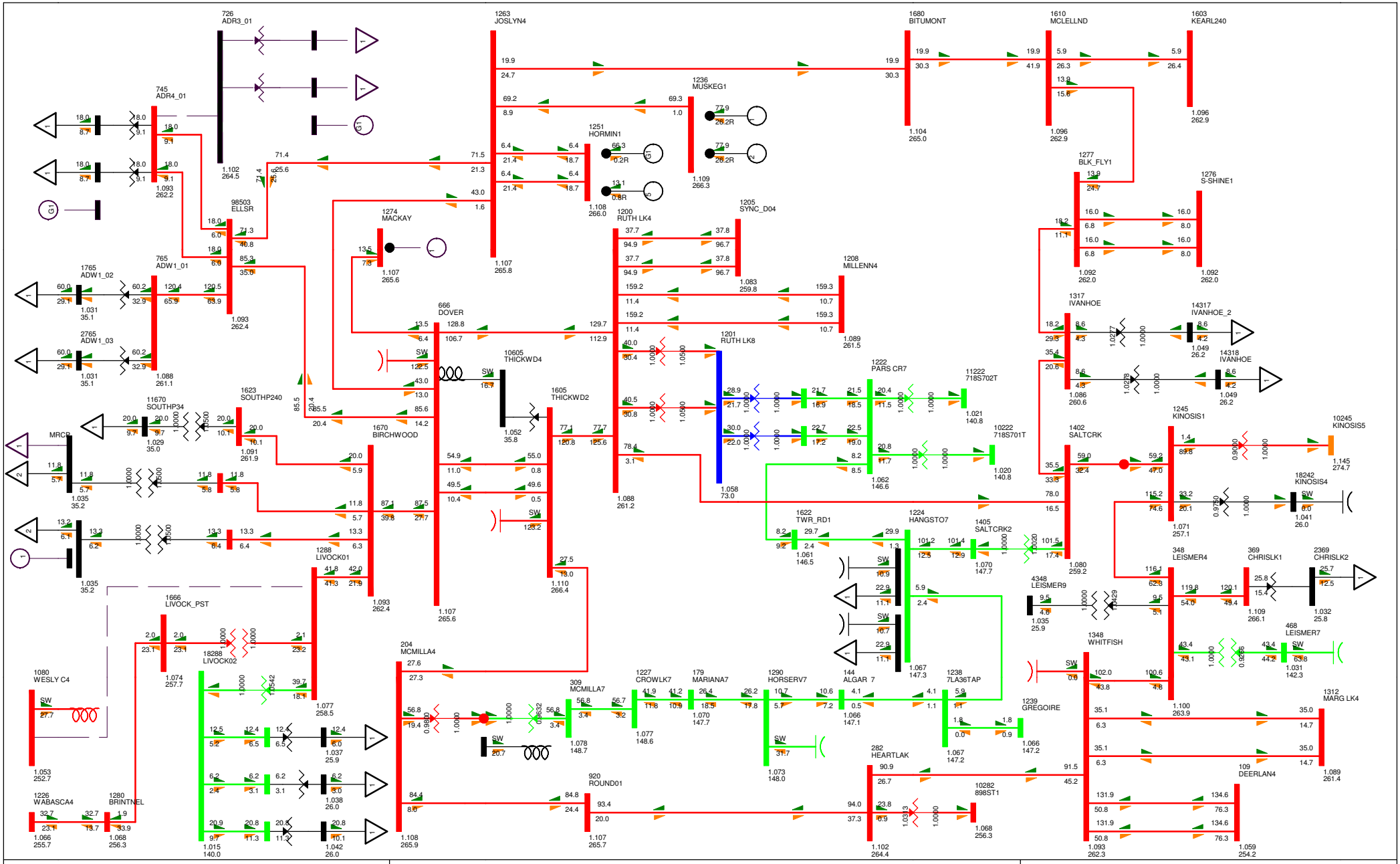

BC - Alberta (IMPORT)759.4 MW

TASMO MODEL; OUTPUT GENERATED 2010-03-01 14:32:47
SWINGBUS 1520 FOR FC-2009-S-2015-10-31:14:14--1--1-0-0
TUE, JUL 26 2011 11:32

2015 NW FMM STUDY

Figure C-2015SP_EX-3

Bus - VOLTAGE (kV/PU)
Branch - MW/Mvar
Equipment - MW/Mvar
100.0%RATEB
1.120OV 0.950UV
kV: <=34.500 <=69.000 <=138.000 <=240.000 <=500.000 >500.000

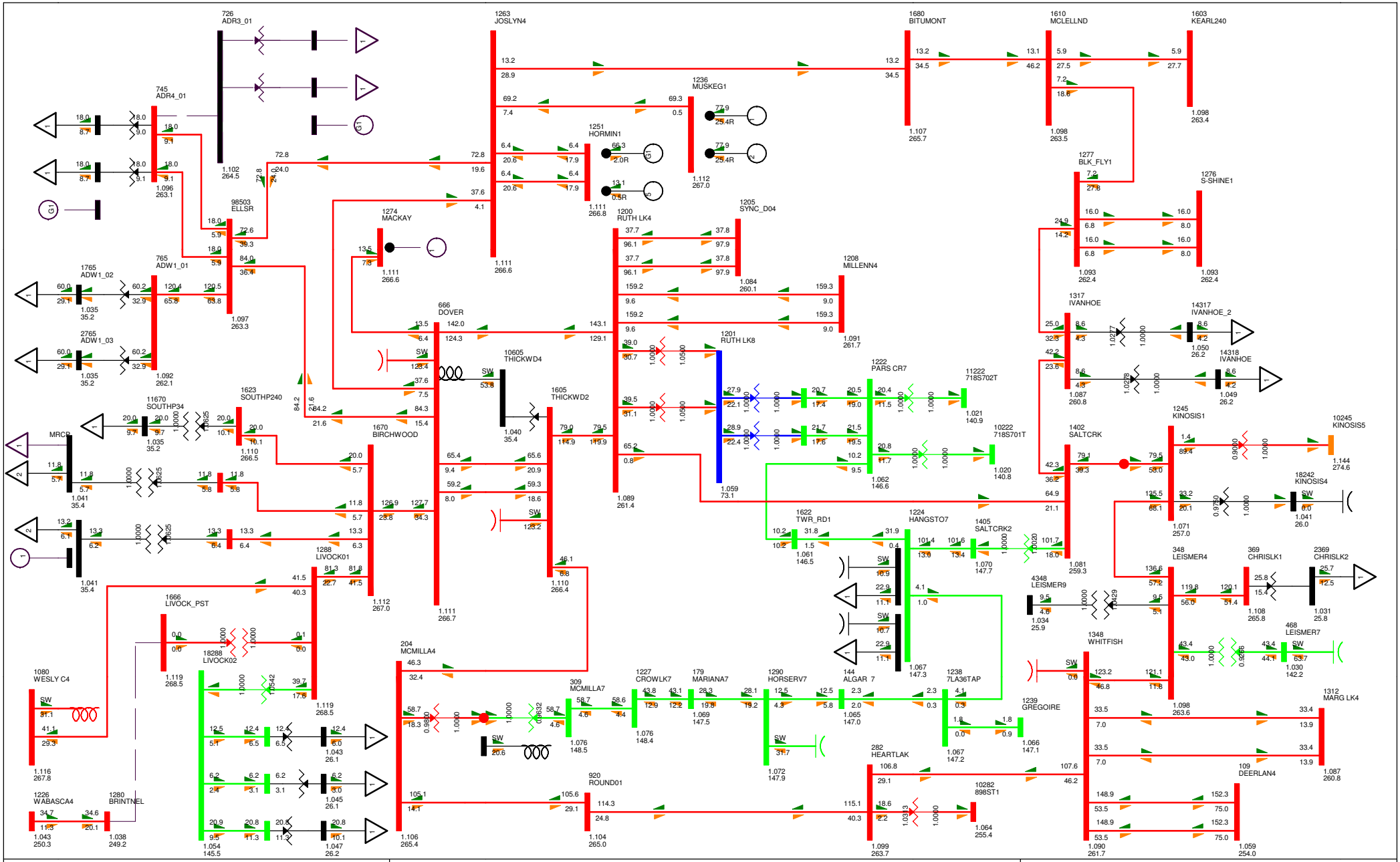
726 ADR3_01
745 ADR4_01
1263 JOSLYN4
1680 BITUMONT
1610 MCLELLND
1603 KEARL240
1236 MUSKEG1
1251 HORMIN1
1277 BLK_FLY1
1276 S-SHINE1
98503 ELLSR
1274 MACKAY
1200 RUTH LK4
1205 SYNC_D04
1765 ADW1_02
765 ADW1_01
2765 ADW1_03
1208 MILLENN4
1317 IVANHOE
14317 IVANHOE_2
14318 IVANHOE
666 DOVER
1201 RUTH LK8
1222 PARS CR7
11222 718S702T
10222 718S701T
10605 THICKWD4
1605 THICKWD2
1623 SOUTHP240
11670 SOUTHP34
1670 BIRCHWOOD
1402 SALTCRK
1245 KINOSIS1
10245 KINOSIS5
18242 KINOSIS4
MRCB
1622 TWR_RD1
1224 HANGSTO7
1405 SALTCRK2
1288 LIVOCK01
1666 LIVOCK_PST
18288 LIVOCK02
348 LEISMER4
369 CHRISLK1
2369 CHRISLK2
4348 LEISMER9
468 LEISMER7
1348 WHITFISH
1312 MARG LK4
204 MCMILLA4
309 MCMILLA7
1227 CROWLK7
179 MARIANA7
1290 HORSERV7
144 ALGAR 7
1238 7LA36TAP
1239 GREGOIRE
282 HEARTLAK
920 ROUND01
10282 898ST1
109 DEERLAN4
1080 WESLY C4
1226 WABASCA4
1280 BRINTNEL
BC - Alberta (IMPORT)753.8 MW
TASMO MODEL; OUTPUT GENERATED 2010-03-01 14:32:47
SWINGBUS 1520 FOR FC-2009-S-2015-10-31:14:14--1--1-0-0
TUE, JUL 26 2011 11:32
2015 NW FMM STUDY
Figure C-2015SP_EX-4
Bus - VOLTAGE (kV/PU)
Branch - MW/Mvar
Equipment - MW/Mvar
100.0%RATEB
1.120OV 0.950UV
kV: <=34.500 <=69.000 <=138.000 <=240.000 <=500.000 >500.000

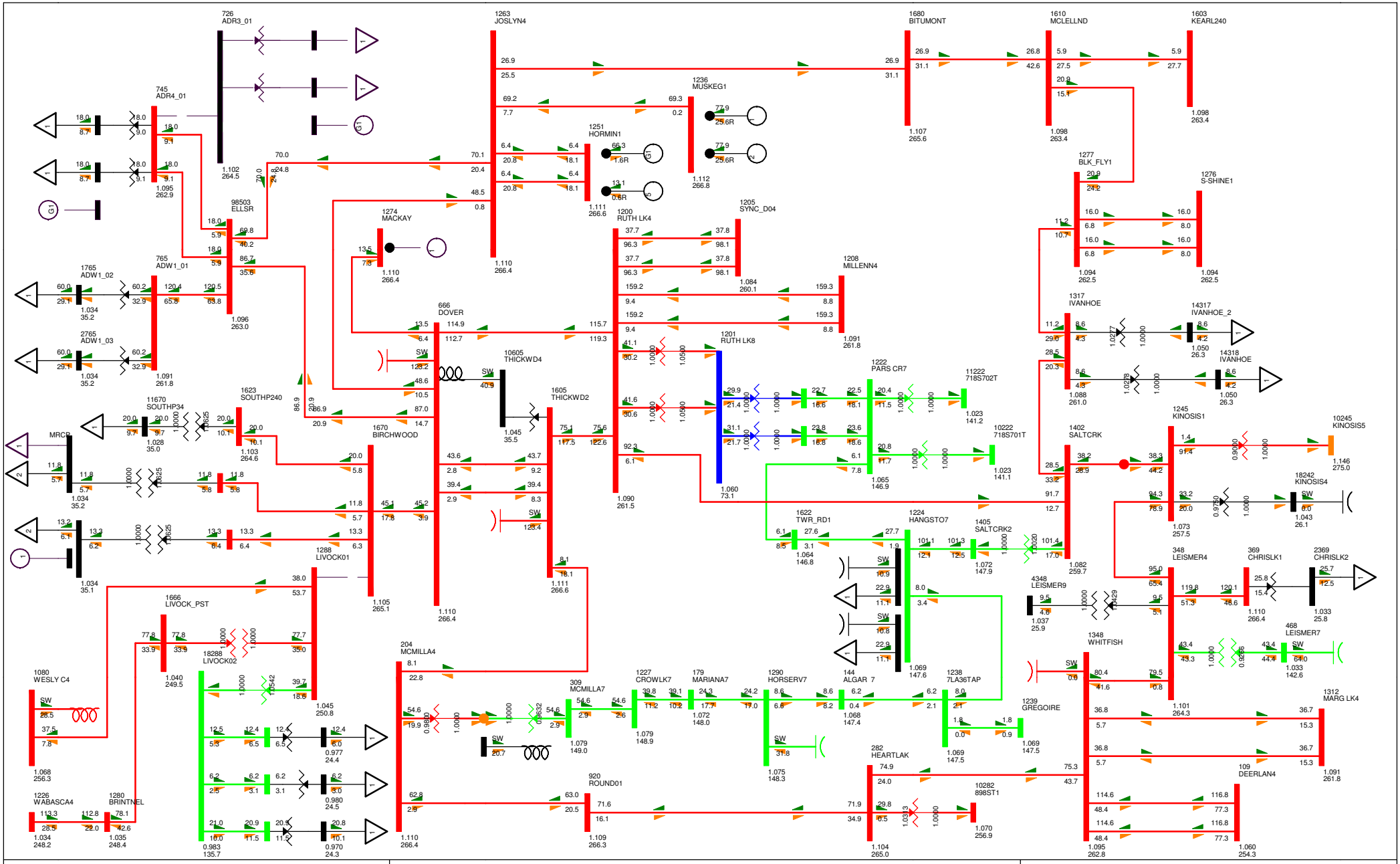

BC - Alberta (IMPORT)763.1 MW

TASMO MODEL; OUTPUT GENERATED 2010-03-01 14:32:47
SWINGBUS 1520 FOR FC-2009-S-2015-10-31:14:14--1--1-0-0
TUE, JUL 26 2011 11:32

2015 NW FMM STUDY

Figure C-2015SP_EX-5

Bus - VOLTAGE (kV/PU)
Branch - MW/Mvar
Equipment - MW/Mvar
100.0%RATEB
1.120OV 0.950UV
kV: <=34.500 <=69.000 <=138.000 <=240.000 <=500.000 >500.000

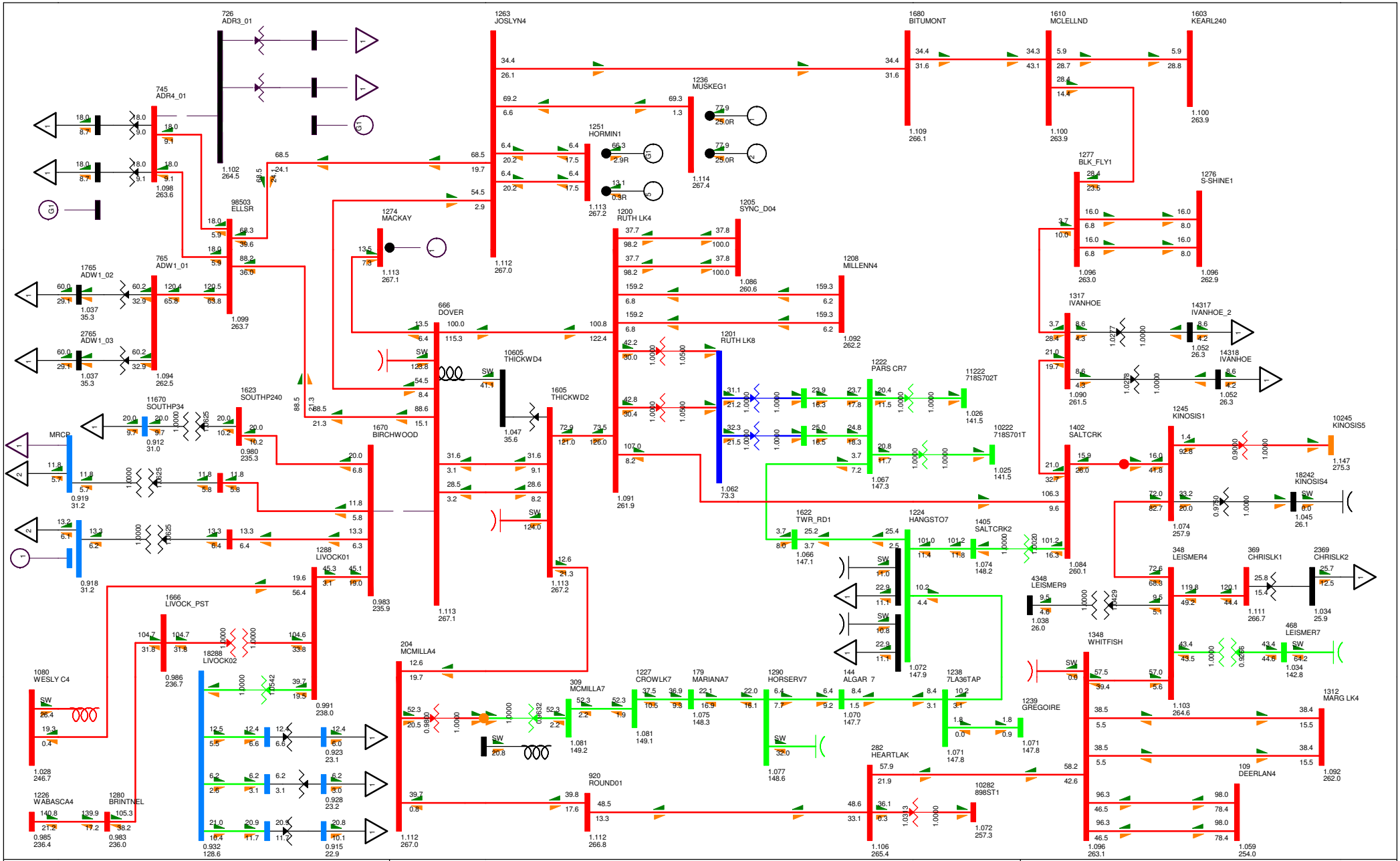

BC - Alberta (IMPORT)781.6 MW

TASMO MODEL; OUTPUT GENERATED 2010-03-01 14:32:47
SWINGBUS 1520 FOR FC-2009-S-2015-10-31:14:14--1--1-0-0
TUE, JUL 26 2011 11:32

2015 NW FMM STUDY

Figure C-2015SP_EX-6

Bus - VOLTAGE (kV/PU)
Branch - MW/Mvar
Equipment - MW/Mvar
100.0%RATEB
1.120OV 0.950UV
kV: <=34.500 <=69.000 <=138.000 <=240.000 <=500.000 >500.000

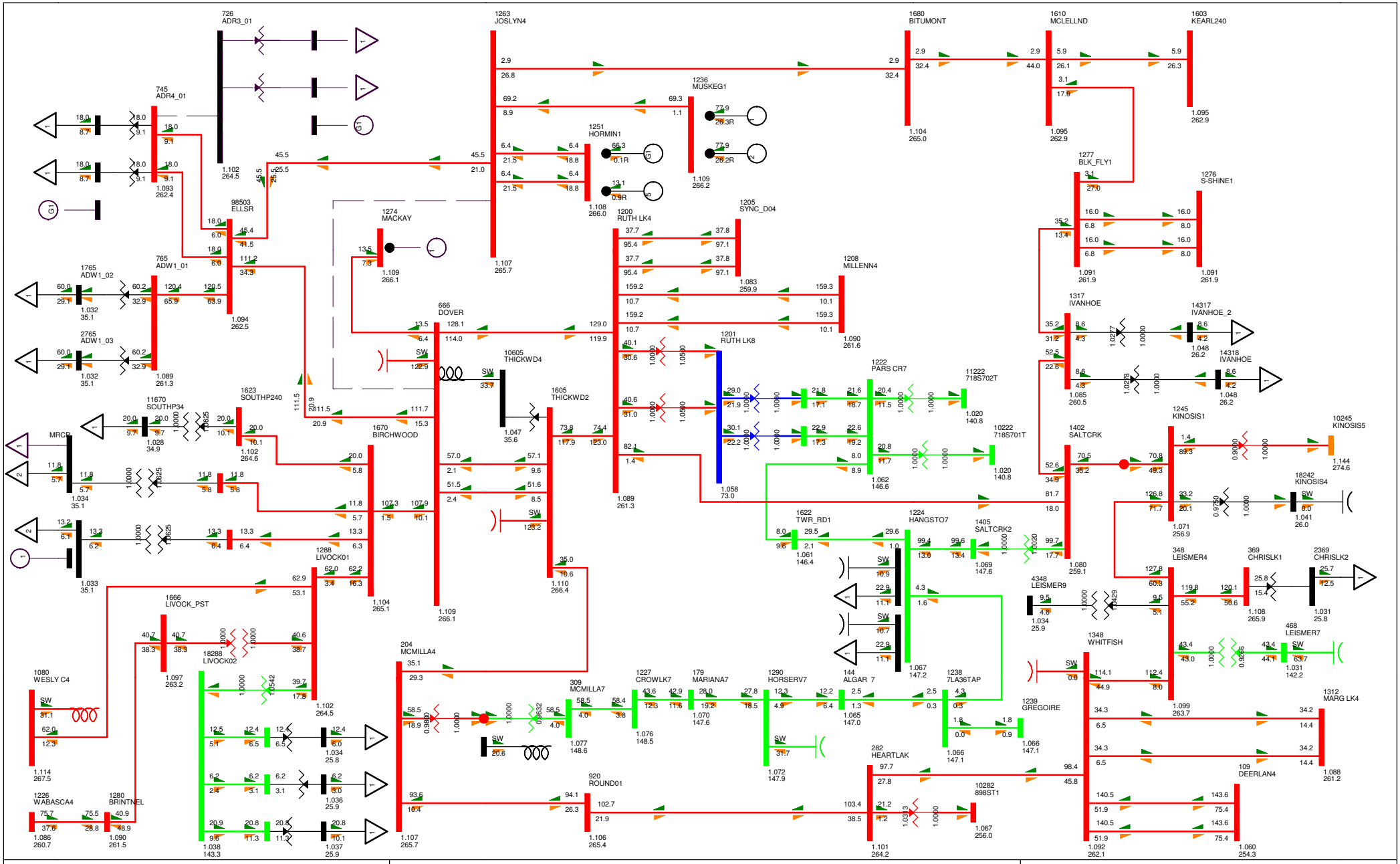
726 ADR3_01
1263 JOSLYN4
1680 BITUMONT
1610 MCLELLND
1603 KEARL240
745 ADR4_01
1236 MUSKEG1
1251 HORMIN1
1277 BLK_FLY1
1276 S-SHINE1
98503 ELLSR
1274 MACKAY
1200 RUTH LK4
1205 SYNC_D04
1765 ADW1_02
765 ADW1_01
2765 ADW1_03
1208 MILLENN4
1317 IVANHOE
14317 IVANHOE_2
14318 IVANHOE
666 DOVER
1201 RUTH LK8
1222 PARS CR7
11222 718S702T
10222 718S701T
1623 SOUTHP240
11670 SOUTHP34
10605 THICKWD4
1605 THICKWD2
1670 BIRCHWOOD
1402 SALTCRK
1245 KINOSIS1
10245 KINOSIS5
18242 KINOSIS4
MRCD
1622 TWR_RD1
1224 HANGSTO7
1405 SALTCRK2
4348 LEISMER9
348 LEISMER4
369 CHRISLK1
2369 CHRISLK2
468 LEISMER7
1348 WHITFISH
1312 MARG LK4
1288 LIVOCK01
1666 LIVOCK_PST
18288 LIVOCK02
204 MCMILLA4
309 MCMILLA7
1227 CROWLK7
179 MARIANA7
1290 HORSERV7
144 ALGAR 7
1238 7LA36TAP
1239 GREGOIRE
282 HEARTLAK
920 ROUND01
10282 898ST1
109 DEERLAN4
1080 WESLY C4
1226 WABASCA4
1280 BRINTNEL
1086 260.7
1090 261.5
1114 267.5
1097 263.2
1102 264.5
1034 25.8
1036 25.9
1038 143.3
1037 25.9
1107 265.7
1106 265.4
1101 264.2
1067 256.0
1066 147.1
1072 147.9
1077 148.6
1076 148.5
1070 147.6
1065 147.0
1067 147.2
1069 147.6
1061 146.4
1062 146.6
1058 73.0
1020 140.8
1089 261.3
1090 261.6
1083 259.9
1109 266.1
1108 266.0
1109 266.2
1104 265.0
1095 262.9
1091 261.9
1085 260.5
1048 26.2
1027 1.0000
1028 1.0000
1050 1.0500
1042 0.9429
1041 26.0
1144 274.6
1071 256.9
1080 259.1
1099 263.7
1088 261.2
1092 262.1
1060 254.3
1031 25.8
1031 142.2
1033 35.1
1032 35.1
1034 35.1
1028 34.9
1102 264.6
1104 265.1
1110 266.4
1047 35.6
1093 262.4
1094 262.5
1089 261.3
1032 35.1
1091 261.9
1095 262.9
1104 265.0
1109 266.2
1108 266.0
1107 265.7
1109 266.1
1110 266.4
1104 265.1
1102 264.5
1097 263.2
1114 267.5
1086 260.7
1090 261.5
1038 143.3
1037 25.9
1036 25.9
1034 25.8
1107 265.7
1106 265.4
1101 264.2
1067 256.0
1066 147.1
1072 147.9
1077 148.6
1076 148.5
1070 147.6
1065 147.0
1067 147.2
1069 147.6
1061 146.4
1062 146.6
1058 73.0
1020 140.8
1089 261.3
1090 261.6
1083 259.9
1109 266.1
1108 266.0
1109 266.2
1104 265.0
1095 262.9
1091 261.9
1085 260.5
1048 26.2

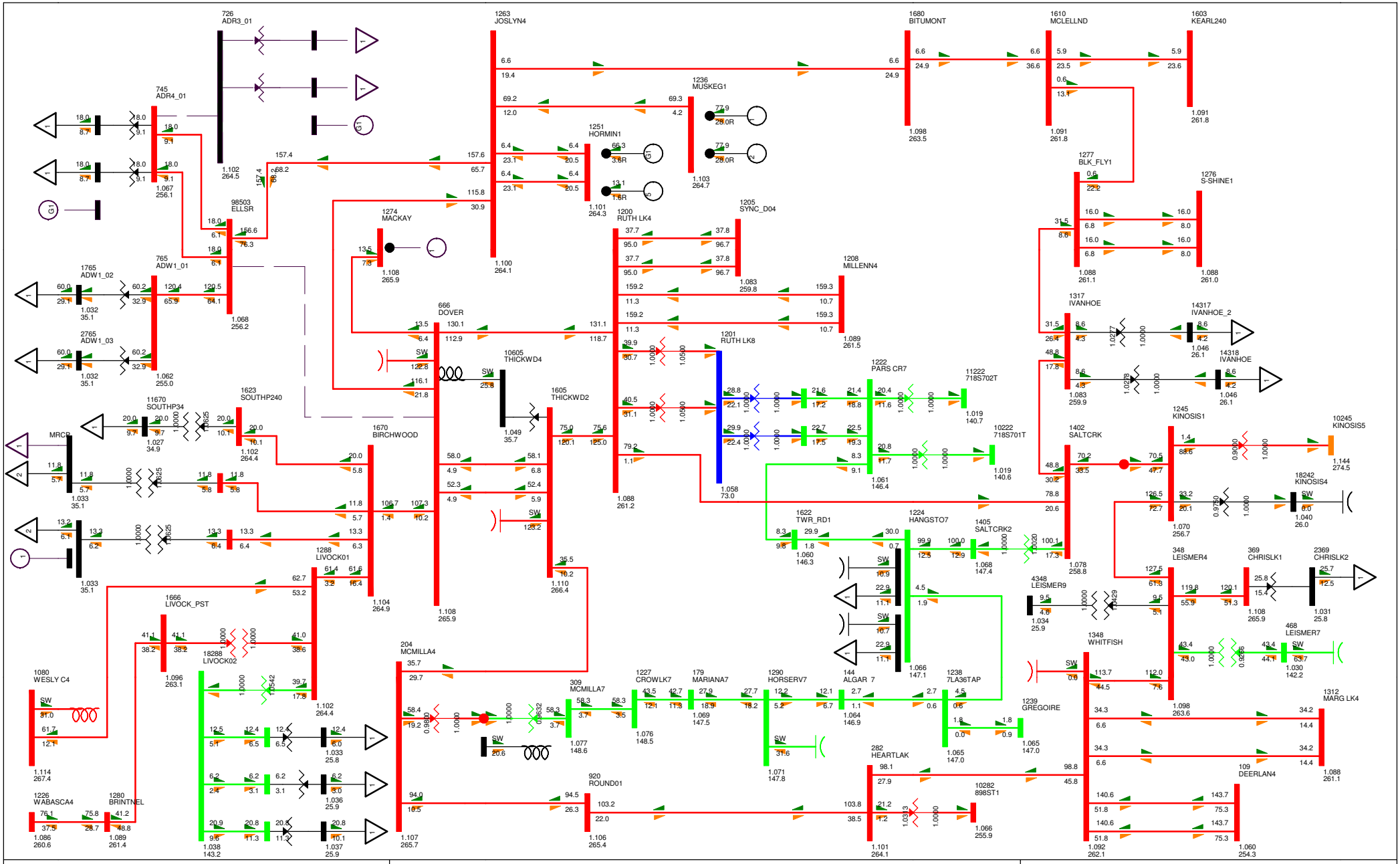

BC - Alberta (IMPORT)752.2 MW

TASMO MODEL; OUTPUT GENERATED 2010-03-01 14:32:47
SWINGBUS 1520 FOR FC-2009-S-2015-10-31:14:14--1--1-0-0
TUE, JUL 26 2011 11:32

2015 NW FMM STUDY

Figure C-2015SP_EX-8

Bus - VOLTAGE (kV/PU)
Branch - MW/Mvar
Equipment - MW/Mvar
100.0%RATEB
1.120OV 0.950UV
kV: <=34.500 <=69.000 <=138.000 <=240.000 <=500.000 >500.000

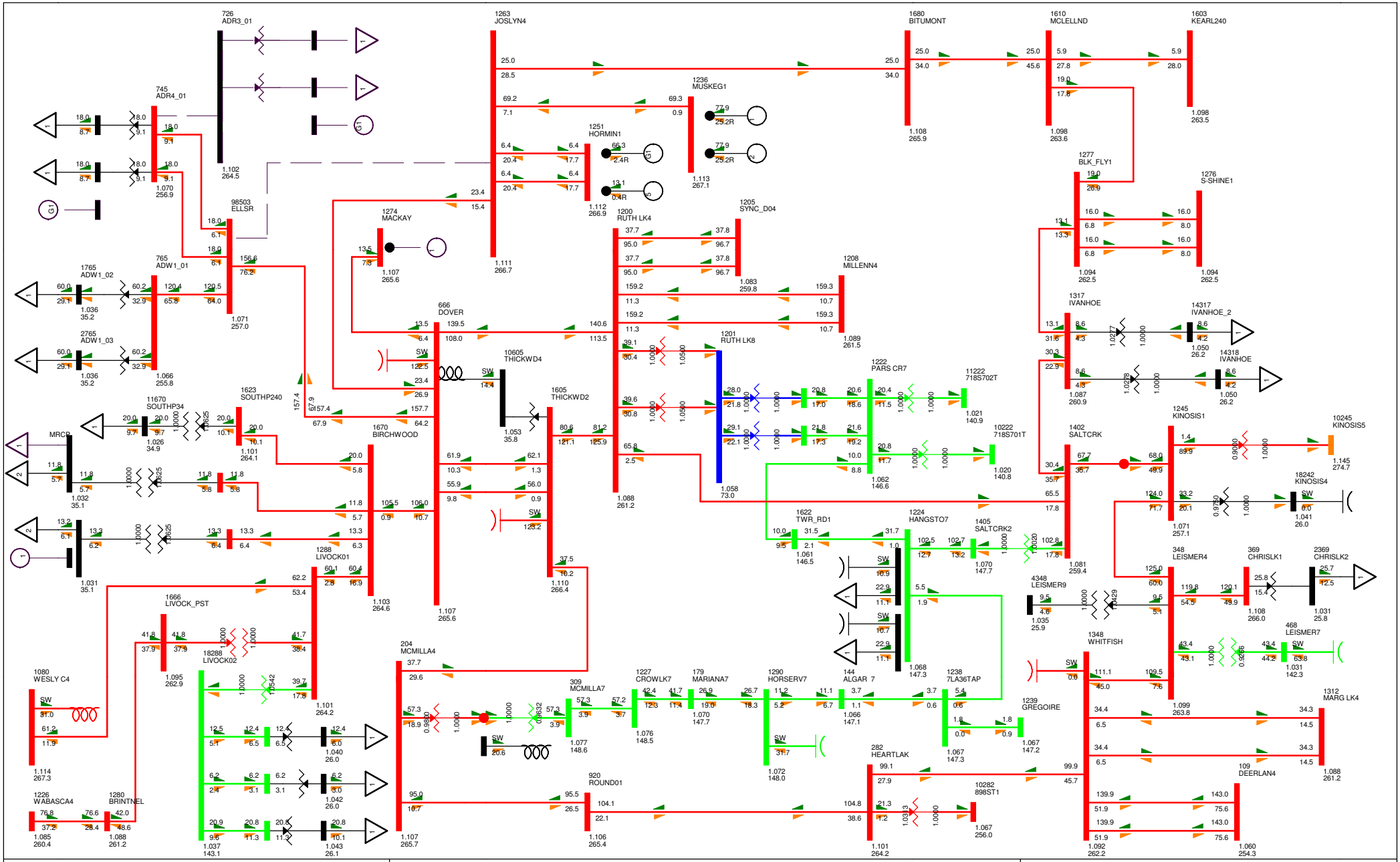
726 ADR3_01
745 ADR4_01
1263 JOSLYN4
1680 BITUMONT
1610 MCLELLND
1603 KEARL240
1236 MUSKEG1
1251 HORMIN1
1277 BLK_FLY1
1276 S-SHINE1
98503 ELLSR
1274 MACKAY
1200 RUTH LK4
1205 SYNC_D04
1765 ADW1_02
765 ADW1_01
2765 ADW1_03
666 DOVER
1208 MILLENN4
1317 IVANHOE
14317 IVANHOE_2
14318 IVANHOE
1201 RUTH LK8
1222 PARS CR7
11222 718S702T
10222 718S701T
1623 SOUTHP240
11670 SOUTHP34
10605 THICKWD4
1605 THICKWD2
1670 BIRCHWOOD
1402 SALTCRK
1245 KINOSIS1
10245 KINOSIS5
18242 KINOSIS4
MRCB
1622 TWR_RD1
1224 HANGSTO7
1405 SALTCRK2
4348 LEISMER9
348 LEISMER4
369 CHRISLK1
2369 CHRISLK2
468 LEISMER7
1288 LIVOCK01
1666 LIVOCK_PST
18288 LIVOCK02
204 MCMILLA4
309 MCMILLA7
1227 CROWLK7
179 MARIANA7
1290 HORSERV7
144 ALGAR 7
1238 7LA36TAP
1239 GREGOIRE
1348 WHITFISH
1312 MARG LK4
109 DEERLAN4
1080 WESLY C4
1226 WABASCA4
1280 BRINTNEL
920 ROUND01
282 HEARTLAK
10282 898ST1
BC - Alberta (IMPORT)752.0 MW
TASMO MODEL; OUTPUT GENERATED 2010-03-01 14:32:47
SWINGBUS 1520 FOR FC-2009-S-2015-10-31:14:14--1--1-0-0
TUE, JUL 26 2011 11:32
2015 NW FMM STUDY
Figure C-2015SP_EX-9
Bus - VOLTAGE (kV/PU)
Branch - MW/Mvar
Equipment - MW/Mvar
100.0%RATEB
1.120OV 0.950UV
kV: <=34.500 <=69.000 <=138.000 <=240.000 <=500.000 >500.000

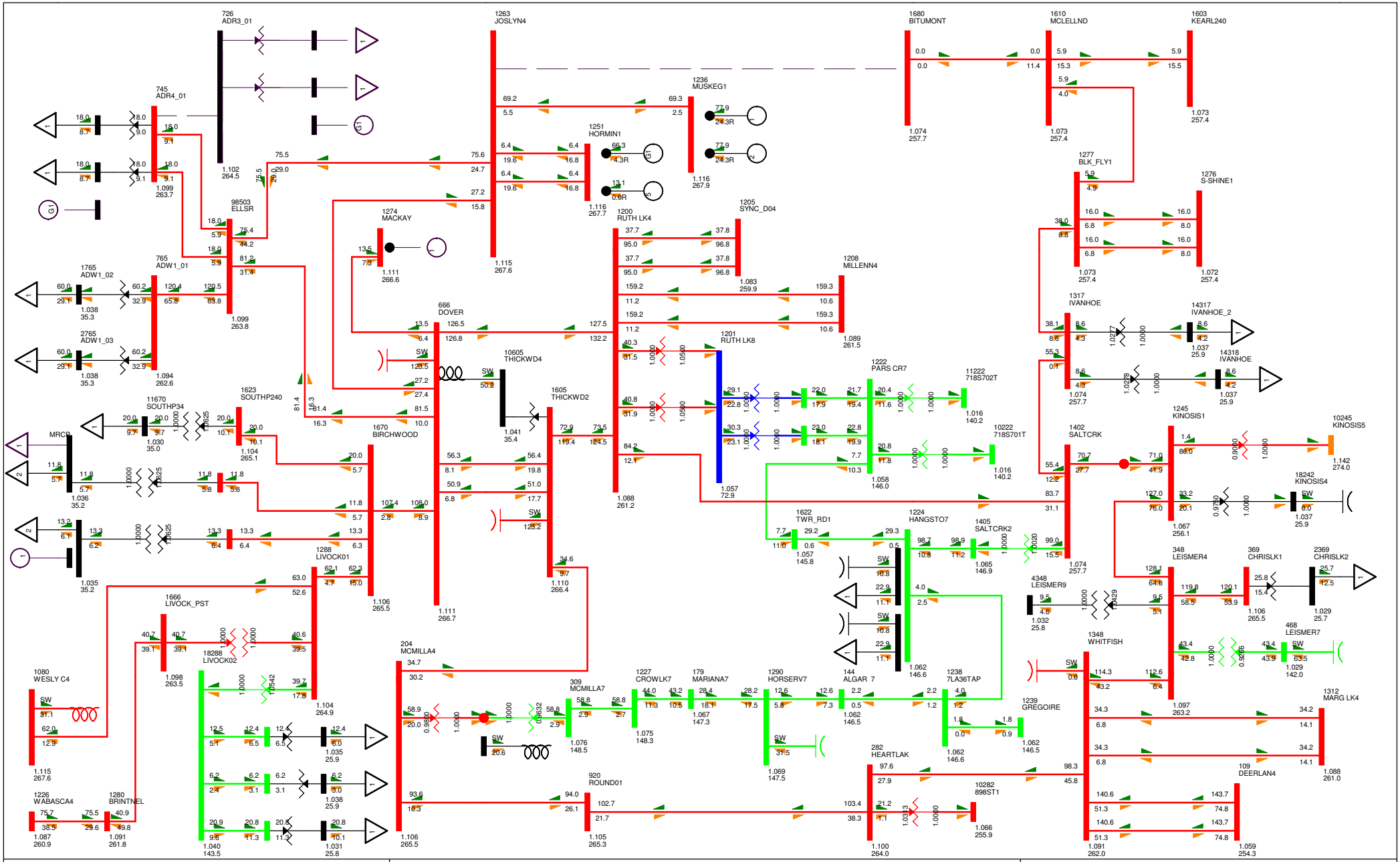

BC - Alberta (IMPORT)751.4 MW

TASMO MODEL; OUTPUT GENERATED 2010-03-01 14:32:47
SWINGBUS 1520 FOR FC-2009-S-2015-10-31:14:14--1--1-0-0
TUE, JUL 26 2011 11:32

2015 NW FMM STUDY

Figure C-2015SP_EX-10

Bus - VOLTAGE (kV/PU)
Branch - MW/Mvar
Equipment - MW/Mvar
100.0%RATEB
1.120OV 0.950UV
kV: <=34.500 <=69.000 <=138.000 <=240.000 <=500.000 >500.000

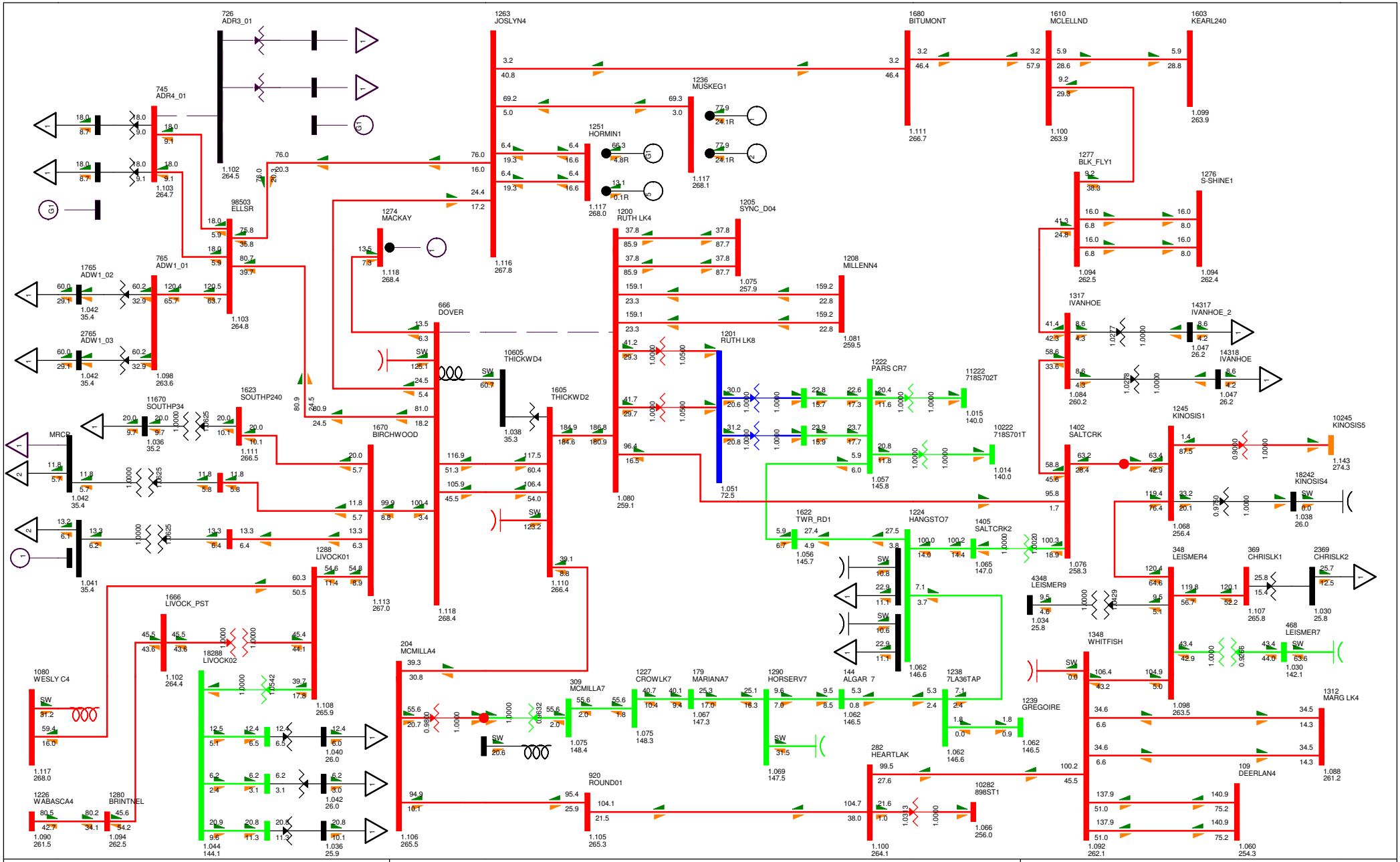

BC - Alberta (IMPORT)753.4 MW

TASMO MODEL; OUTPUT GENERATED 2010-03-01 14:32:47
SWINGBUS 1520 FOR FC-2009-S-2015-10-31:14:14--1--1-0-0
TUE, JUL 26 2011 11:32

2015 NW FMM STUDY

Figure C-2015SP_EX-11

Bus - VOLTAGE (kV/PU)
Branch - MW/Mvar
Equipment - MW/Mvar
100.0%RATEB
1.120OV 0.950UV
kV: <=34.500 <=69.000 <=138.000 <=240.000 <=500.000 >500.000

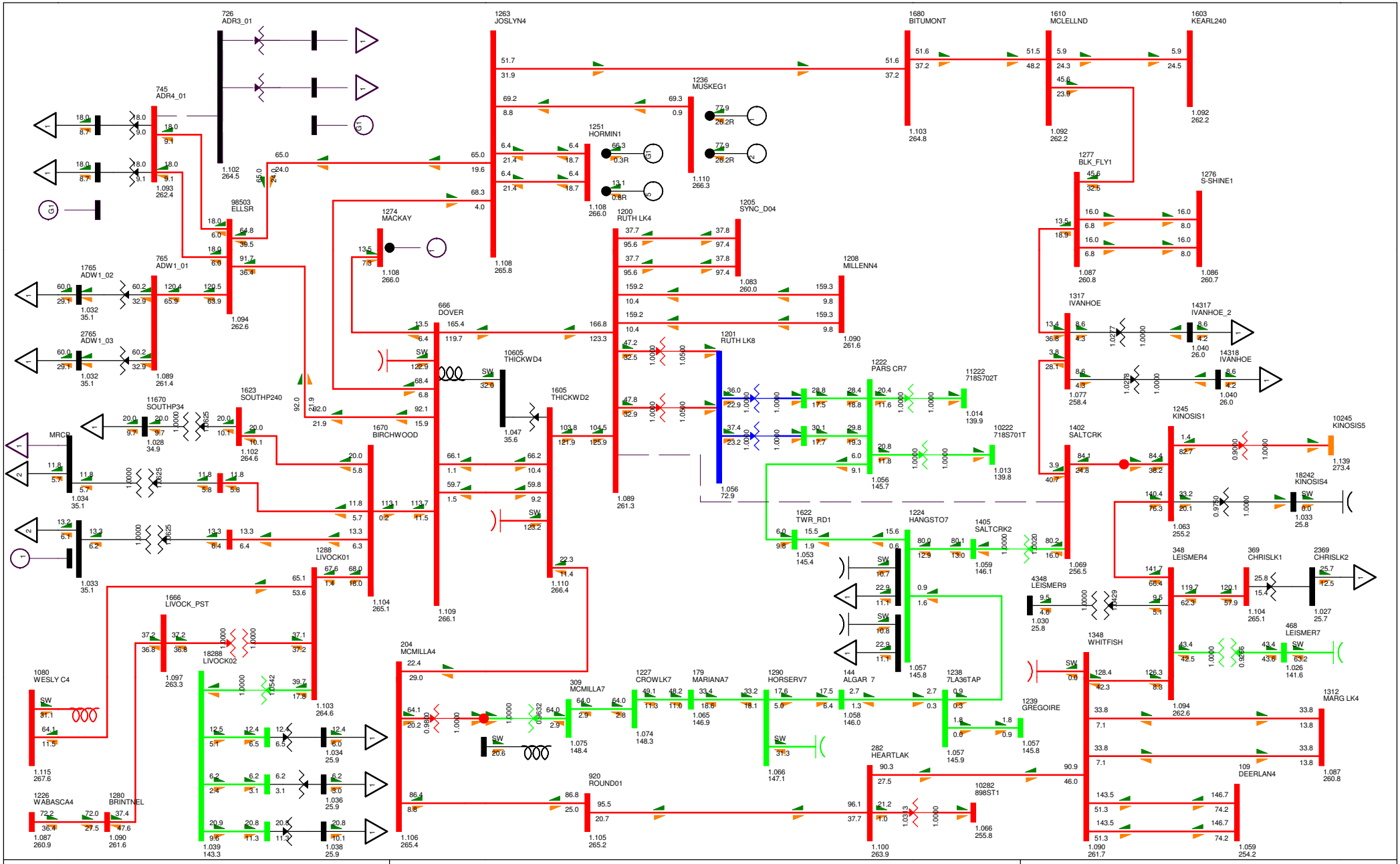

BC - Alberta (IMPORT)752.0 MW

TASMO MODEL; OUTPUT GENERATED 2010-03-01 14:32:47
SWINGBUS 1520 FOR FC-2009-S-2015-10-31:14:14--1--1-0-0
TUE, JUL 26 2011 11:32

2015 NW FMM STUDY

Figure C-2015SP_EX-12

Bus - VOLTAGE (kV/PU)
Branch - MW/Mvar
Equipment - MW/Mvar
100.0%RATEB
1.120OV 0.950UV
kV: <=34.500 <=69.000 <=138.000 <=240.000 <=500.000 >500.000

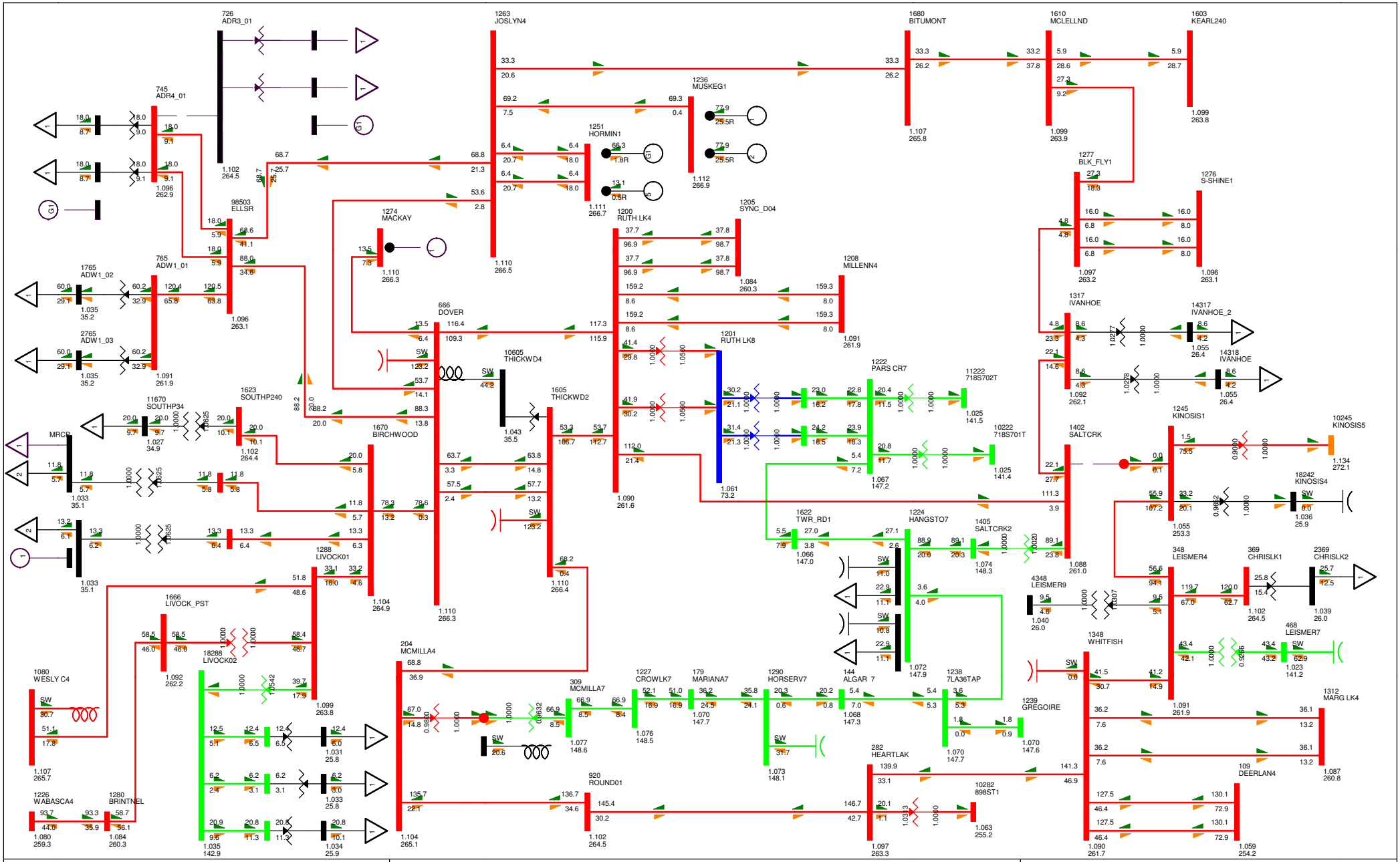
726 ADR3_01
745 ADR4_01
1263 JOSLYN4
1680 BITUMONT
1610 MCLELLND
1603 KEARL240
1236 MUSKEG1
1251 HORMIN1
1277 BLK_FLY1
1276 S-SHINE1
98503 ELLSR
1274 MACKAY
1200 RUTH LK4
1205 SYNC_D04
1765 ADW1_02
765 ADW1_01
2765 ADW1_03
1208 MILLENN4
1317 IVANHOE
14317 IVANHOE_2
14318 IVANHOE
666 DOVER
1201 RUTH LK8
1222 PARS CR7
11222 718S702T
10222 718S701T
1623 SOUTHP240
11670 SOUTHP34
10605 THICKWD4
1605 THICKWD2
1670 BIRCHWOOD
MRCB
1402 SALTCRK
1245 KINOSIS1
10245 KINOSIS5
18242 KINOSIS4
1622 TWR_RD1
1224 HANGSTO7
1405 SALTCRK2
348 LEISMER4
369 CHRISLK1
2369 CHRISLK2
4348 LEISMER9
468 LEISMER7
1288 LIVOCK01
1666 LIVOCK_PST
18288 LIVOCK02
204 MCMILLA4
309 MCMILLA7
1227 CROWLK7
179 MARIANA7
1290 HORSERV7
144 ALGAR 7
1238 7LA36TAP
1348 WHITFISH
1239 GREGOIRE
1312 MARG LK4
109 DEERLAN4
282 HEARTLAK
920 ROUND01
10282 898ST1
1080 WESLY C4
1226 WABASCA4
1280 BRINTNEL
BC - Alberta (IMPORT)755.9 MW
TASMO MODEL; OUTPUT GENERATED 2010-03-01 14:32:47
SWINGBUS 1520 FOR FC-2009-S-2015-10-31:14:14--1--1-0-0
TUE, JUL 26 2011 11:32
2015 NW FMM STUDY
Figure C-2015SP_EX-13
Bus - VOLTAGE (kV/PU)
Branch - MW/Mvar
Equipment - MW/Mvar
100.0%RATEB
1.120OV 0.950UV
kV: <=34.500 <=69.000 <=138.000 <=240.000 <=500.000 >500.000

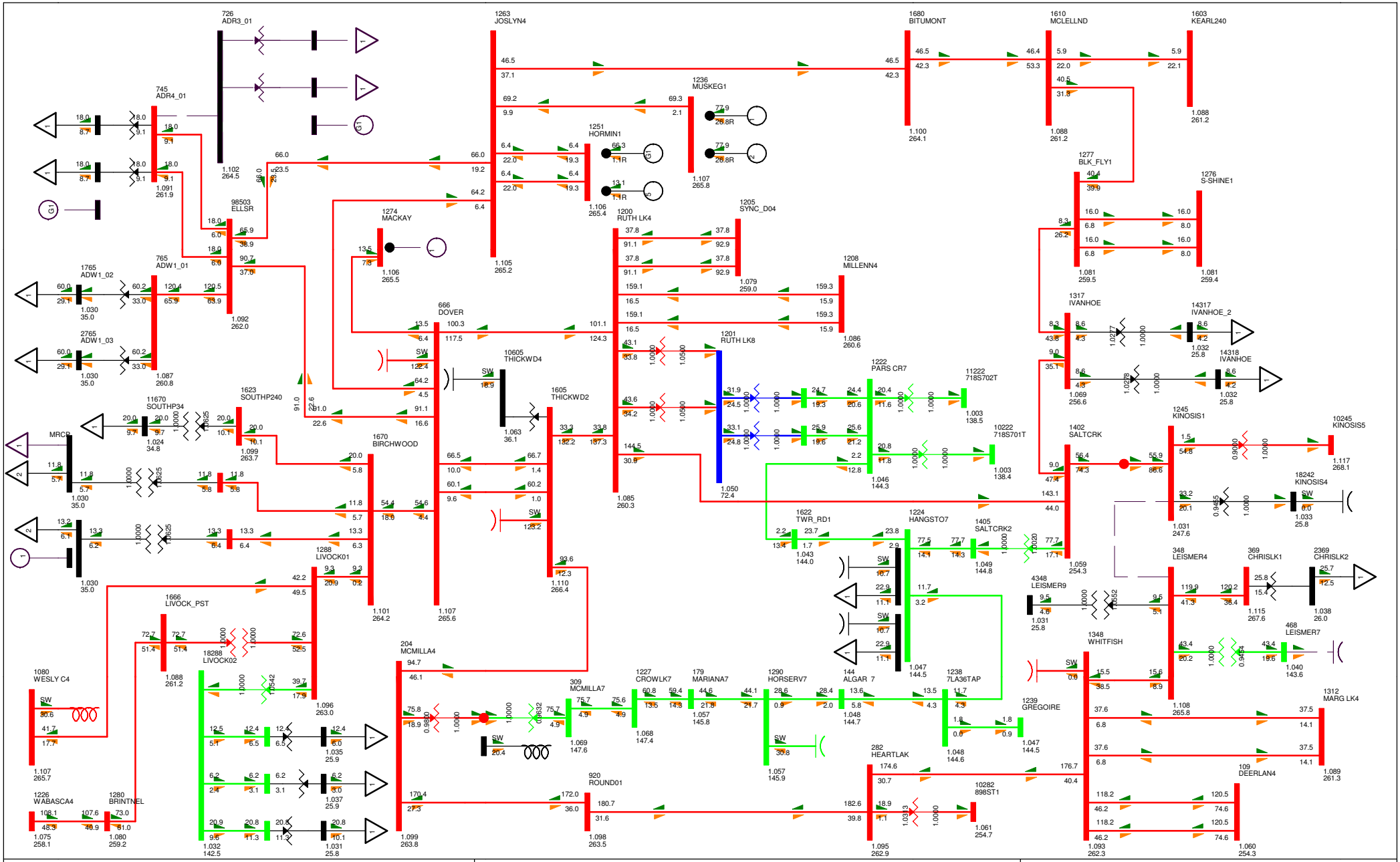

BC - Alberta (IMPORT)764.6 MW

TASMO MODEL; OUTPUT GENERATED 2010-03-01 14:32:47
SWINGBUS 1520 FOR FC-2009-S-2015-10-31:14:14--1--1-0-0
FRI, AUG 12 2011 17:11

2015 NW FMM STUDY

Figure C-2015SP_EX-14

Bus - VOLTAGE (kV/PU)
Branch - MW/Mvar
Equipment - MW/Mvar
100.0%RATEA
1.120OV 0.950UV
kV: <=34.500 <=69.000 <=138.000 <=240.000 <=500.000 >500.000

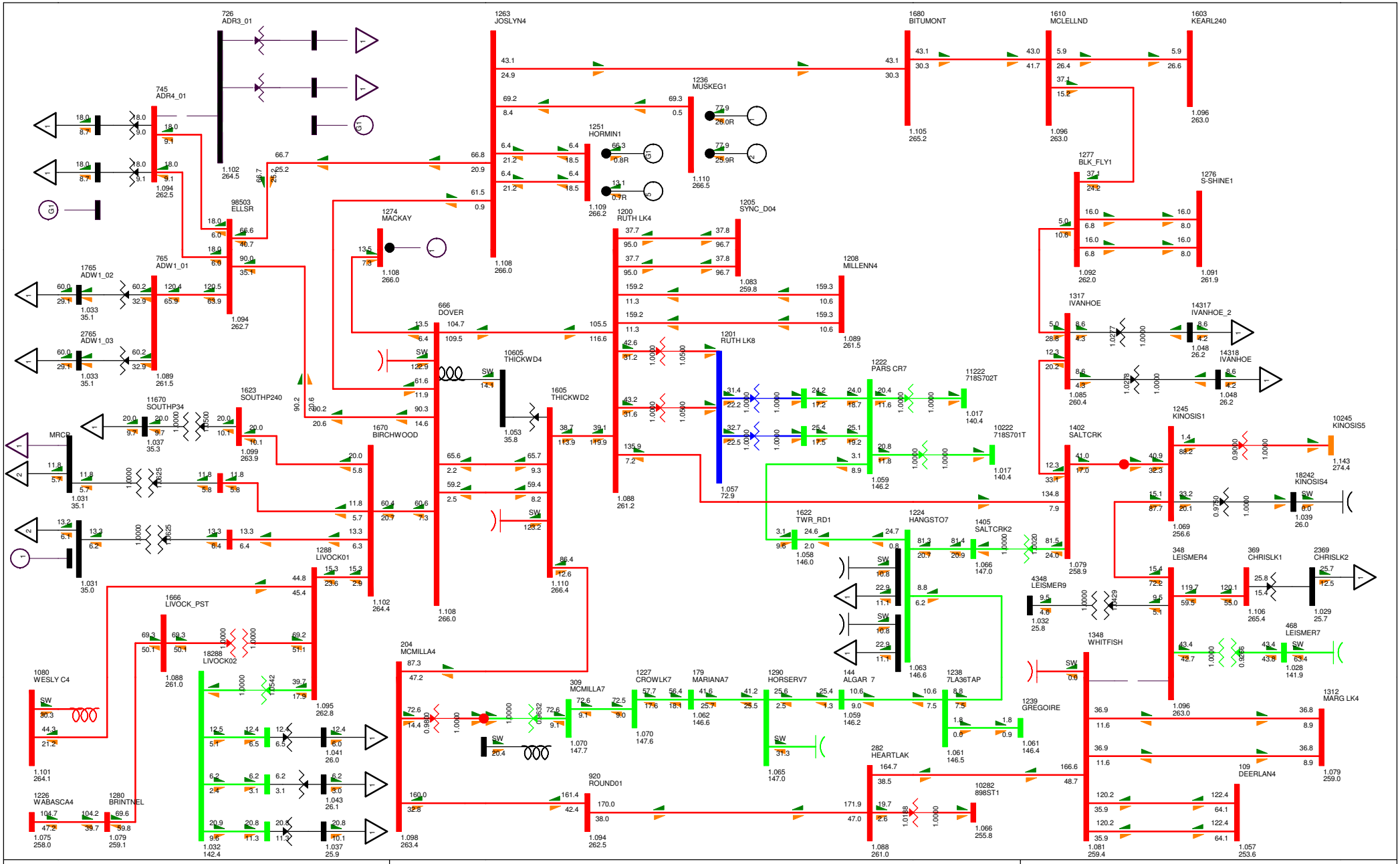
726 ADR3_01
745 ADR4_01
1263 JOSLYN4
1680 BITUMONT
1610 MCLELLND
1603 KEARL240
1236 MUSKEG1
1251 HORMIN1
1277 BLK_FLY1
1276 S-SHINE1
98503 ELLSR
1274 MACKAY
1200 RUTH LK4
1205 SYNC_D04
1765 ADW1_02
765 ADW1_01
2765 ADW1_03
1208 MILLENN4
1317 IVANHOE
14317 IVANHOE_2
14318 IVANHOE
666 DOVER
1201 RUTH LK8
1222 PARS CR7
11222 718S702T
10222 718S701T
1623 SOUTHP240
11670 SOUTHP34
10605 THICKWD4
1605 THICKWD2
1670 BIRCHWOOD
MRCB
1402 SALTCRK
1245 KINOSIS1
10245 KINOSIS5
18242 KINOSIS4
1622 TWR_RD1
1224 HANGSTO7
1405 SALTCRK2
4348 LEISMER9
348 LEISMER4
369 CHRISLK1
2369 CHRISLK2
468 LEISMER7
1288 LIVOCK01
1666 LIVOCK_PST
18288 LIVOCK02
204 MCMILLA4
309 MCMILLA7
1227 CROWLK7
179 MARIANA7
1290 HORSERV7
144 ALGAR 7
1238 7LA36TAP
1239 GREGOIRE
1348 WHITFISH
1312 MARG LK4
109 DEERLAN4
282 HEARTLAK
920 ROUND01
10282 898ST1
1080 WESLY C4
1226 WABASCA4
1280 BRINTNEL
1101 264.1
1075 258.0
1079 259.1
1088 261.0
1095 262.8
1041 26.0
1043 26.1
1032 142.4
1037 25.9
1098 263.4
1070 147.7
1062 146.6
1065 147.0
1059 146.2
1063 146.6
1061 146.5
1061 146.4
1088 261.0
1066 255.8
1081 259.4
1057 253.6
1096 263.0
1106 265.4
1029 25.7
1028 141.9
1079 259.0
1069 256.6
1039 26.0
1143 274.4
1085 260.4
1048 26.2
1092 262.0
1091 261.9
1105 265.2
1110 266.5
1109 266.2
1108 266.0
1102 264.5
1094 262.5
1033 35.1
1089 261.5
1099 263.9
1037 35.3
1031 35.1
1031 35.0
1102 264.4
1108 266.0
1053 35.8
1110 266.4
1088 261.2
1057 72.9
1059 146.2
1017 140.4
1017 140.4
1058 146.0
1066 147.0
1079 258.9
1032 25.8
1096 263.0
1061 146.4
1081 259.4
1057 253.6
1088 261.0
1066 255.8
1094 262.5
1098 263.4
1070 147.6
1062 146.6
1065 147.0
1059 146.2
1063 146.6
1061 146.5
1061 146.4

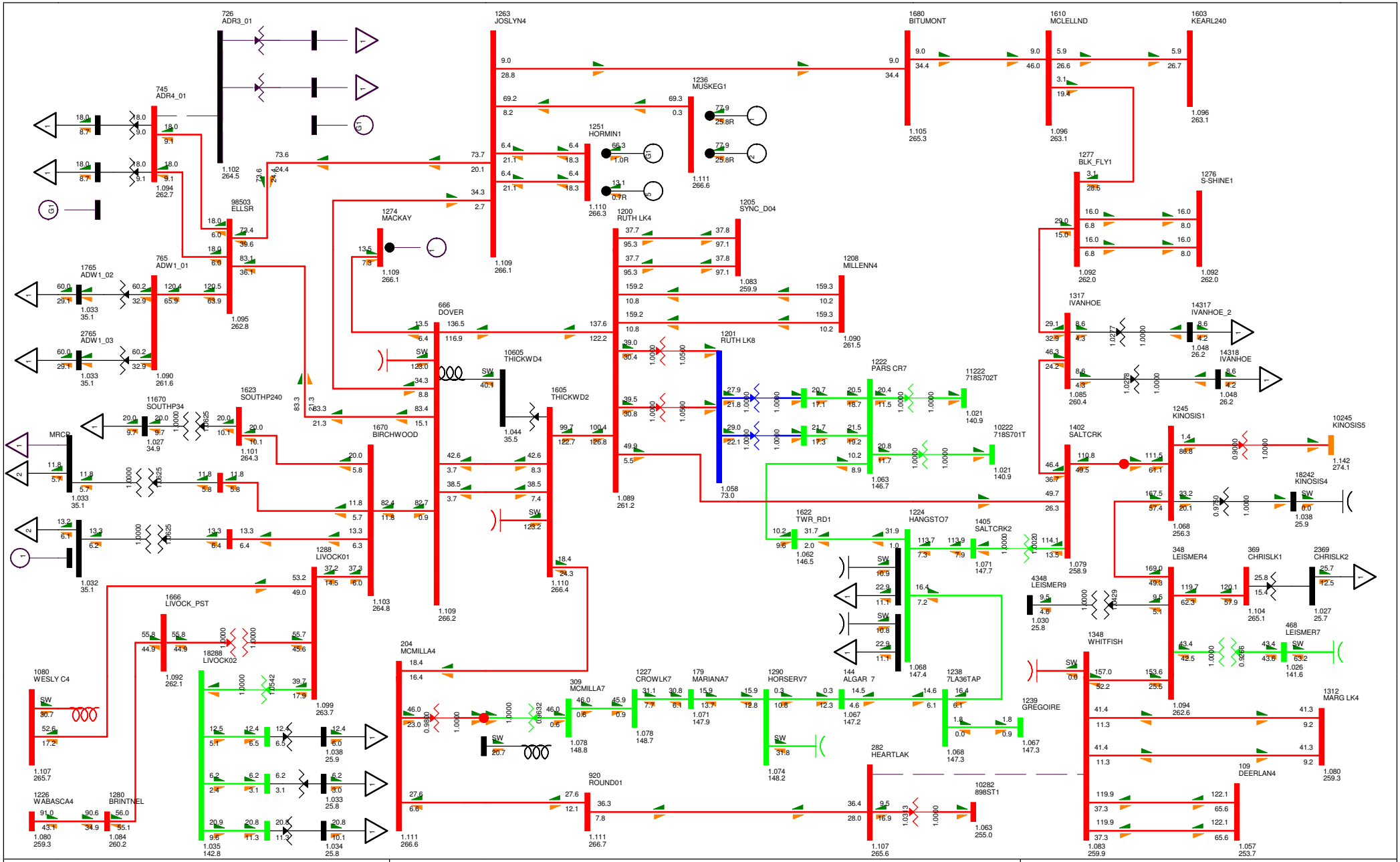
726 ADR3_01
745 ADR4_01
1263 JOSLYN4
1680 BITUMONT
1610 MCLELLND
1603 KEARL240
1236 MUSKEG1
1251 HORMIN1
1277 BLK_FLY1
1276 S-SHINE1
98503 ELLSR
1274 MACKAY
1200 RUTH LK4
1205 SYNC_D04
1765 ADW1_02
765 ADW1_01
2765 ADW1_03
1208 MILLENN4
1317 IVANHOE
14317 IVANHOE_2
14318 IVANHOE
666 DOVER
1201 RUTH LK8
1222 PARS CR7
11222 718S702T
10222 718S701T
1623 SOUTHP240
11670 SOUTHP34
10605 THICKWD4
1605 THICKWD2
1670 BIRCHWOOD
1402 SALTCRK
1245 KINOSIS1
10245 KINOSIS5
18242 KINOSIS4
MRCD
1622 TWR_RD1
1224 HANGSTO7
1405 SALTCRK2
1288 LIVOCK01
1666 LIVOCK_PST
18288 LIVOCK02
348 LEISMER4
369 CHRISLK1
2369 CHRISLK2
4348 LEISMER9
468 LEISMER7
204 MCMILLA4
309 MCMILLA7
1227 CROWLK7
179 MARIANA7
1290 HORSERV7
144 ALGAR 7
1238 7LA36TAP
1239 GREGOIRE
1348 WHITFISH
1312 MARG LK4
109 DEERLAN4
1080 WESLY C4
1226 WABASCA4
1280 BRINTNEL
920 ROUND01
282 HEARTLAK
10282 898ST1
BC - Alberta (IMPORT)759.0 MW
TASMO MODEL; OUTPUT GENERATED 2010-03-01 14:32:47
SWINGBUS 1520 FOR FC-2009-S-2015-10-31:14:14--1--1-0-0
TUE, JUL 26 2011 11:33
2015 NW FMM STUDY
Figure C-2015SP_EX-16
Bus - VOLTAGE (kV/PU)
Branch - MW/Mvar
Equipment - MW/Mvar
100.0%RATEB
1.120OV 0.950UV
kV: <=34.500 <=69.000 <=138.000 <=240.000 <=500.000 >500.000

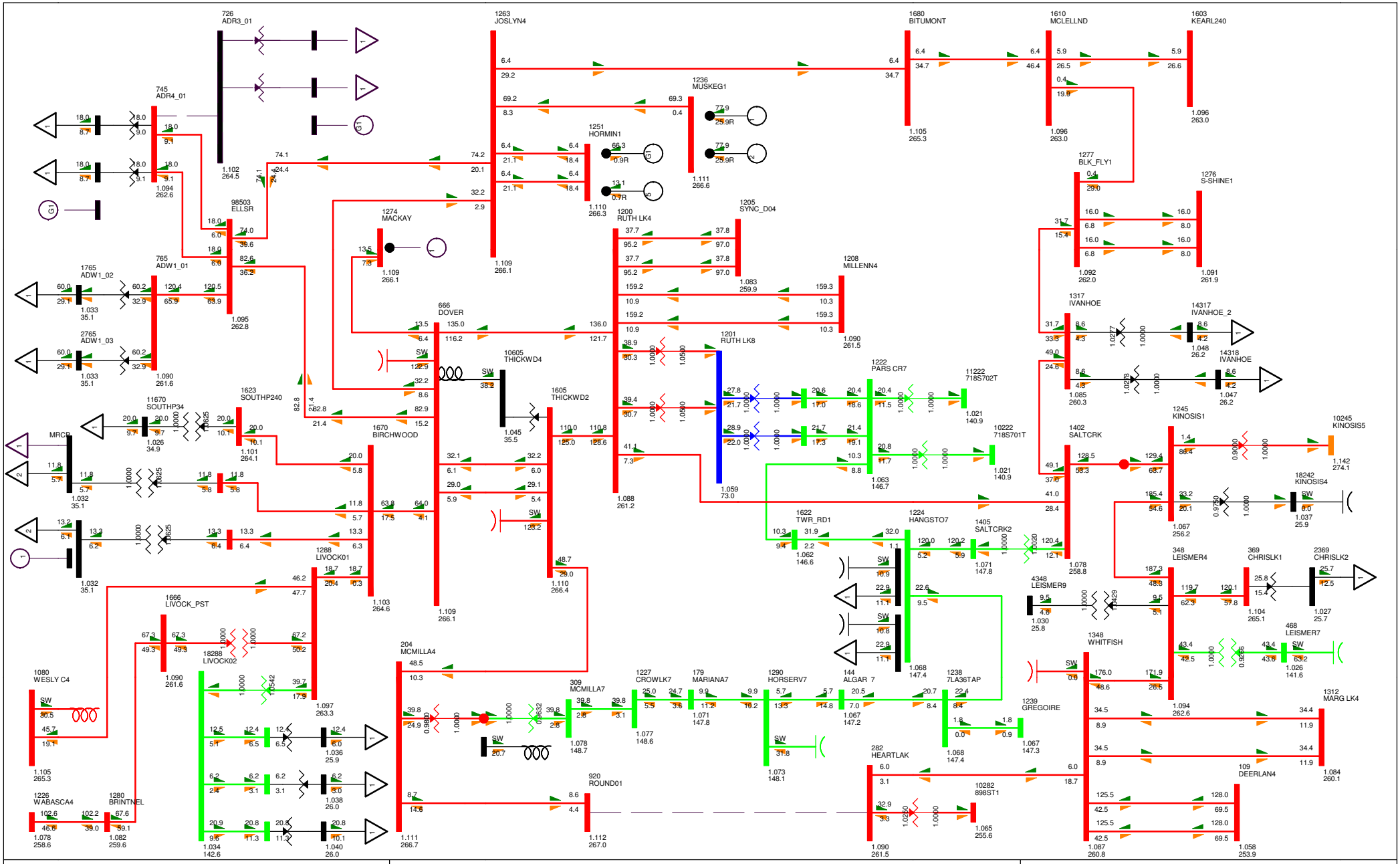

BC - Alberta (IMPORT)758.6 MW

TASMO MODEL; OUTPUT GENERATED 2010-03-01 14:32:47
SWINGBUS 1520 FOR FC-2009-S-2015-10-31:14:14--1--1-0-0
TUE, JUL 26 2011 11:33

2015 NW FMM STUDY

Figure C-2015SP_EX-17

Bus - VOLTAGE (kV/PU)
Branch - MW/Mvar
Equipment - MW/Mvar
100.0%RATEB
1.120OV 0.950UV
kV: <=34.500 <=69.000 <=138.000 <=240.000 <=500.000 >500.000

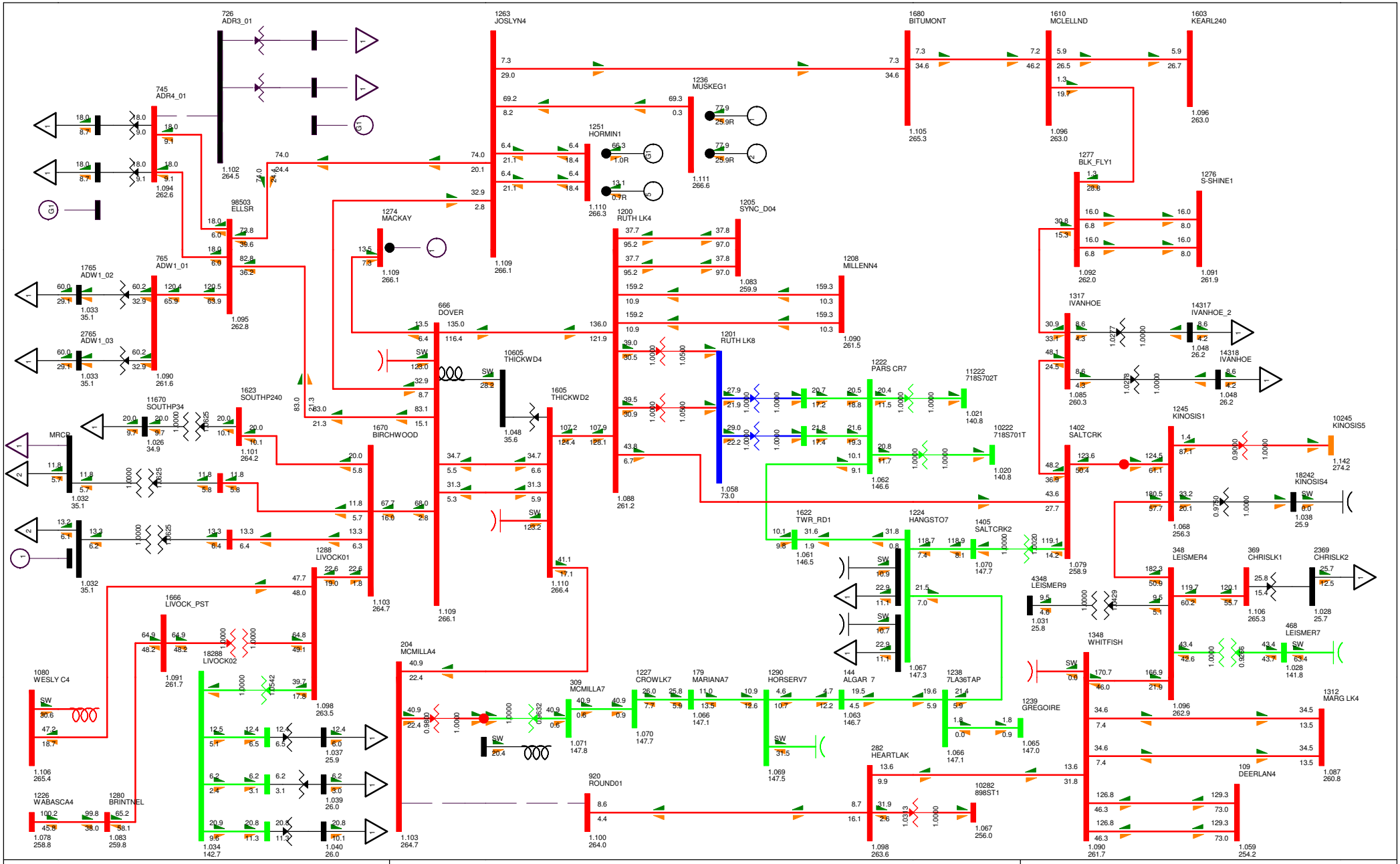

BC - Alberta (IMPORT)757.3 MW

TASMO MODEL; OUTPUT GENERATED 2010-03-01 14:32:47
SWINGBUS 1520 FOR FC-2009-S-2015-10-31:14:14--1--1-0-0
TUE, JUL 26 2011 11:33

2015 NW FMM STUDY

Figure C-2015SP_EX-18

Bus - VOLTAGE (kV/PU)
Branch - MW/Mvar
Equipment - MW/Mvar
100.0%RATEB
1.120OV 0.950UV
kV: <=34.500 <=69.000 <=138.000 <=240.000 <=500.000 >500.000

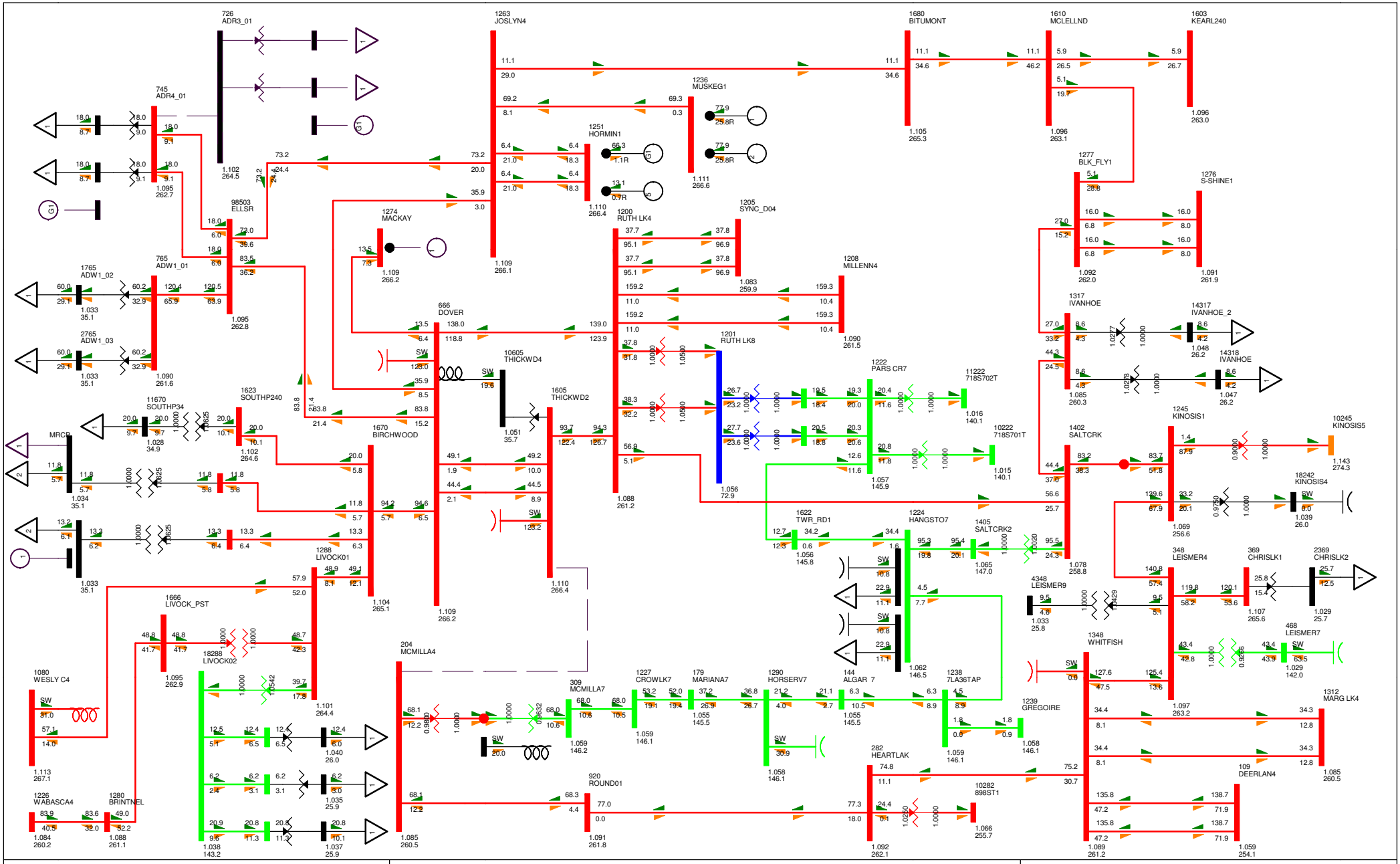

BC - Alberta (IMPORT)753.3 MW

TASMO MODEL; OUTPUT GENERATED 2010-03-01 14:32:47
SWINGBUS 1520 FOR FC-2009-S-2015-10-31:14:14--1--1-0-0
TUE, JUL 26 2011 11:33

2015 NW FMM STUDY

Figure C-2015SP_EX-19

Bus - VOLTAGE (kV/PU)
Branch - MW/Mvar
Equipment - MW/Mvar
100.0%RATEB
1.120OV 0.950UV
kV: <=34.500 <=69.000 <=138.000 <=240.000 <=500.000 >500.000

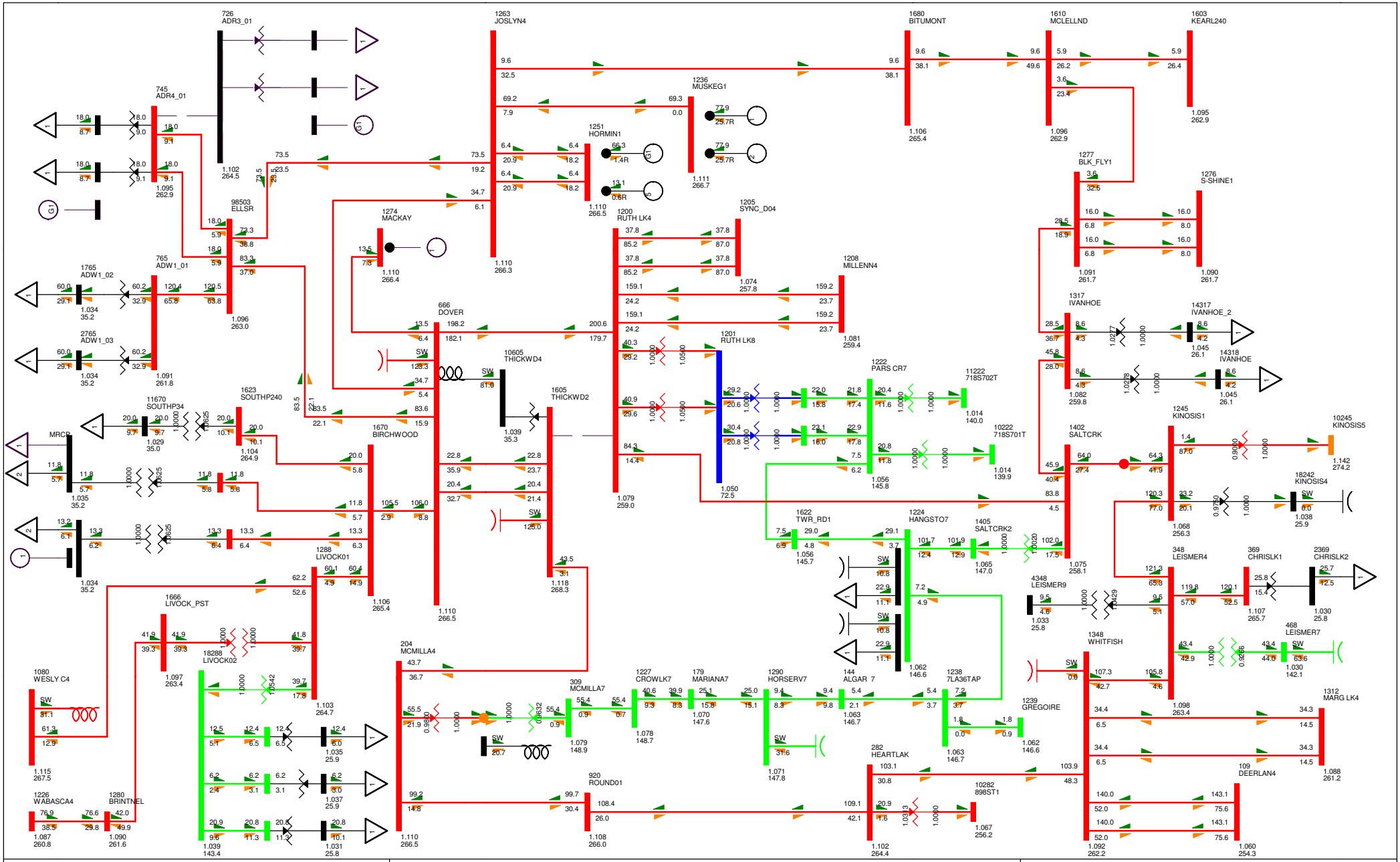

BC - Alberta (IMPORT)752.6 MW

TASMO MODEL; OUTPUT GENERATED 2010-03-01 14:32:47
SWINGBUS 1520 FOR FC-2009-S-2015-10-31:14:14--1--1-0-0
TUE, JUL 26 2011 11:33

2015 NW FMM STUDY

Figure C-2015SP_EX-20

Bus - VOLTAGE (kV/PU)
Branch - MW/Mvar
Equipment - MW/Mvar
100.0%RATEB
1.120OV 0.950UV
kV: <=34.500 <=69.000 <=138.000 <=240.000 <=500.000 >500.000

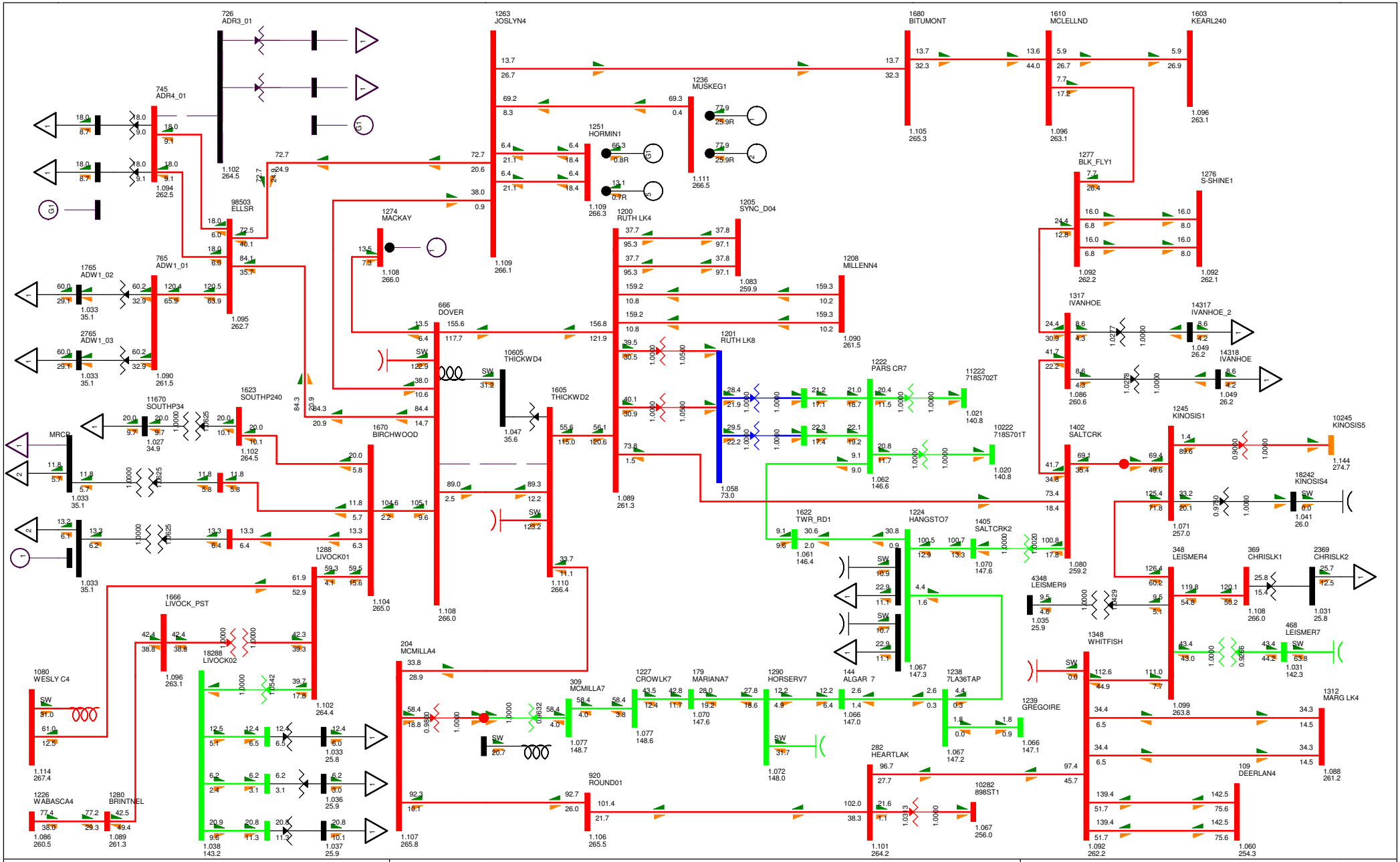

BC - Alberta (IMPORT)751.6 MW

TASMO MODEL; OUTPUT GENERATED 2010-03-01 14:32:47
SWINGBUS 1520 FOR FC-2009-S-2015-10-31:14:14--1--1-0-0
TUE, JUL 26 2011 11:33

2015 NW FMM STUDY

Figure C-2015SP_EX-21

Bus - VOLTAGE (kV/PU)
Branch - MW/Mvar
Equipment - MW/Mvar
100.0%RATEB
1.120OV 0.950UV
kV: <=34.500 <=69.000 <=138.000 <=240.000 <=500.000 >500.000

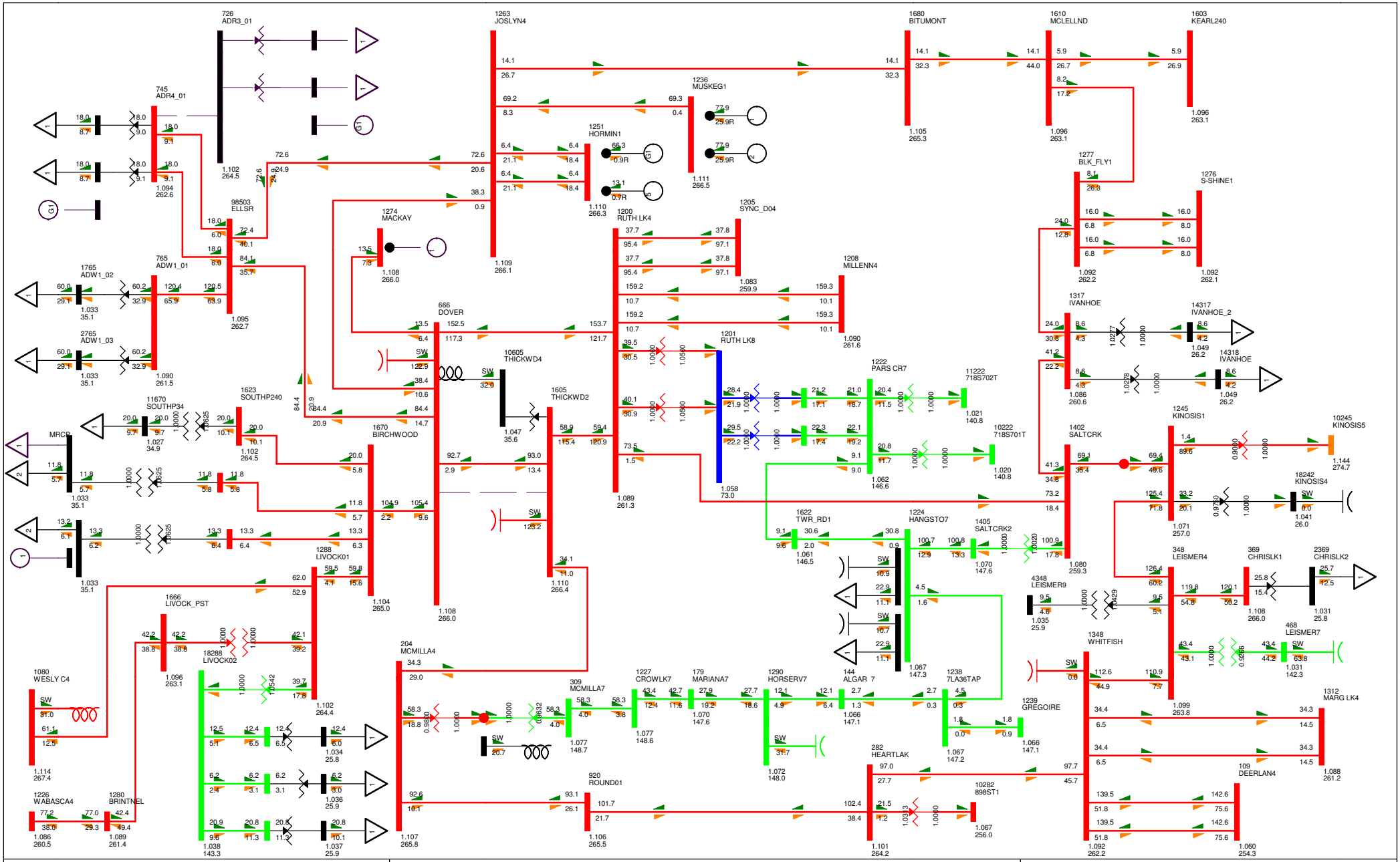

BC - Alberta (IMPORT)751.6 MW

TASMO MODEL; OUTPUT GENERATED 2010-03-01 14:32:47
SWINGBUS 1520 FOR FC-2009-S-2015-10-31:14:14--1--1-0-0
TUE, JUL 26 2011 11:33

2015 NW FMM STUDY

Figure C-2015SP_EX-22

Bus - VOLTAGE (kV/PU)
Branch - MW/Mvar
Equipment - MW/Mvar
100.0%RATEB
1.120OV 0.950UV
kV: <=34.500 <=69.000 <=138.000 <=240.000 <=500.000 >500.000

Table C-4 Power Flow Analysis Summary- 2015 Winter Peak Existing System

Figure Name	Contingency	Thermal Violation	Voltage Violation
Figure C-2015WP_EX-1	Base Case (N - 0)	None	None
Figure C-2015WP_EX-2	Open 9L56 240kV line (WABASCA 720S to Brintnell 876S)	None	None
Figure C-2015WP_EX-3	Open 9L15 240kV line (Wesley Creek 834S to Livock 939S)	None	None
Figure C-2015WP_EX-4	Open 9L10 240kV line (Brintnell 876S to Livock 939S)	None	None
Figure C-2015WP_EX-5	Open 9L57 240kV line (Livock 939S to Birchwood Creek 960S)	None	None
Figure C-2015WP_EX-6	Open 9L74 240kV line (Birchwood Creek 960S to Dover 888S)	None	9% Post Transient Voltage Deviation at MRCP and Livock
Figure C-2015WP_EX-7	Open 9L09 240kV line (Dover 888S to Joslyn Creek 849S)	None	None
Figure C-2015WP_EX-8	Open 9L08 240kV line (Ells River to to Dover 888S)	None	None
Figure C-2015WP_EX-9	Open 9L76 240kV line (Ells River to Joslyn Creek 849S)	None	None
Figure C-2015WP_EX-10	Open 9L32 240kV line (Joslyn Creek 849S to Bitumont 941S)	None	None
Figure C-2015WP_EX-11	Open 9L01 240kV line (Dover 888S to Ruth Lake 848S)	None	None
Figure C-2015WP_EX-12	Open 9L23 240kV line (Ruth Lake 848S to Salt Creek 977S)	None	None
Figure C-2015WP_EX-13	Open 9L990 240kV line (Salt Creek 977S to Kinosis 856S)	None	None
Figure C-2015WP_EX-14	Open 9L990 240kV line (Kinosis 856S to Leismer 72S)	None	None

Figure C-2015WP_EX-15	Open 9L930 240kV line (Leismer 72S to Whitefish Lake 825S)	None	None
Figure C-2015WP_EX-16	Open 9L22 240kV line (Whitefish Lake 825S to Heart Lake 898S)	None	None
Figure C-2015WP_EX-17	Open 9L47 240kV line (Heart Lake 898S to RoundHill POD)	None	None
Figure C-2015WP_EX-18	Open 9L55 240kV line (RoundHill POD to McMillan 885S)	None	None
Figure C-2015WP_EX-19	Open 9L07 240kV line (McMillan 885S TO Dover 888S)	None	None
Figure C-2015WP_EX-20	Open 9L58 240kV line (Ruth Lake 848S to Thickwood 951S)	None	None
Figure C-2015WP_EX-21	Open 9L68 240kV line (Thickwood 951S TO Dover 888S)	None	None
Figure C-2015WP_EX-22	Open 9L30 240kV line (McMillan 885S TO Dover 888S)	None	None

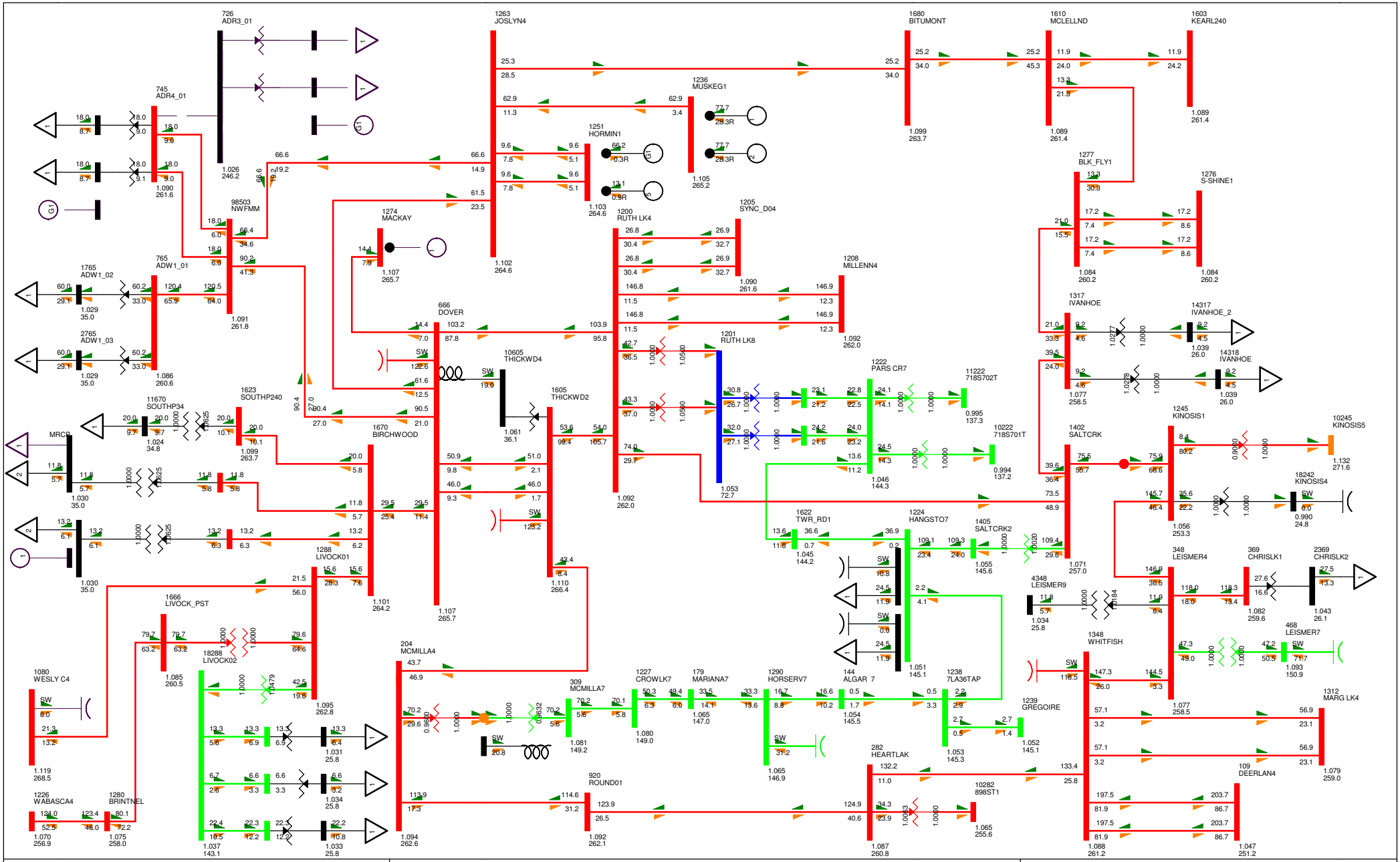

BC - Alberta (IMPORT)773.9 MW

TASMO MODEL; OUTPUT GENERATED 2010-03-01 14:45:14
SWINGBUS 1520 FOR FC-2009-5-2016-04-30:19:24--1--1-0-0
TUE, JUL 26 2011 14:27

2015 NW FMM STUDY

Figure C-2015WP_EX-1

Bus - VOLTAGE (kV/PU)
Branch - MW/Mvar
Equipment - MW/Mvar
100.0%RATEB
1.120OV 0.950UV
kV: <=34.500 <=69.000 <=138.000 <=240.000 <=500.000 >500.000

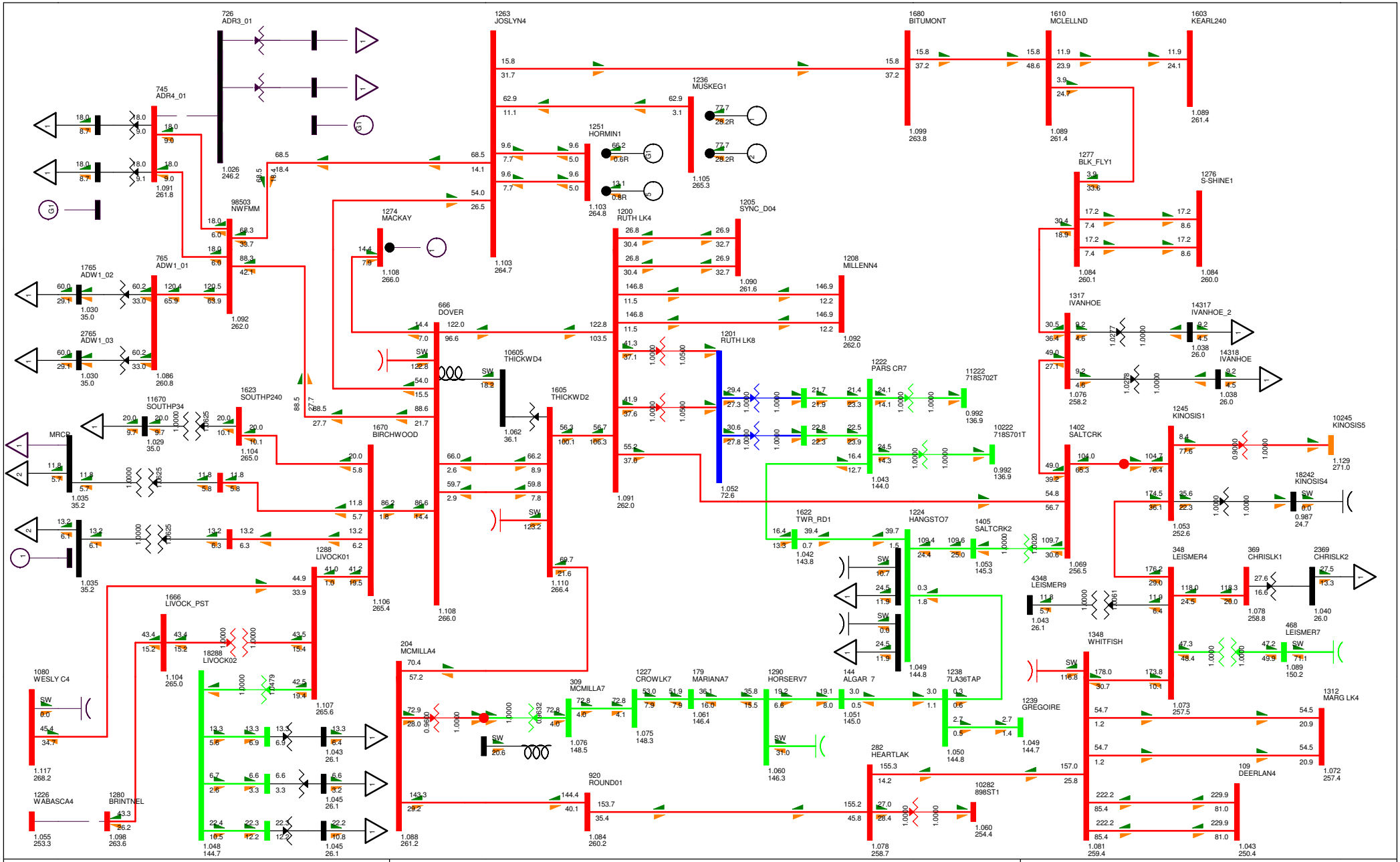

BC - Alberta (IMPORT)787.5 MW

TASMO MODEL; OUTPUT GENERATED 2010-03-01 14:45:14
SWINGBUS 1520 FOR FC-2009-S-2016-04-30:19:24--1--1-0-0
TUE, JUL 26 2011 14:27

2015 NW FMM STUDY

Figure C-2015WP_EX-2

Bus - VOLTAGE (kV/PU)
Branch - MW/Mvar
Equipment - MW/Mvar
100.0%RATEB
1.120OV 0.950UV
kV: <=34.500 <=69.000 <=138.000 <=240.000 <=500.000 >500.000

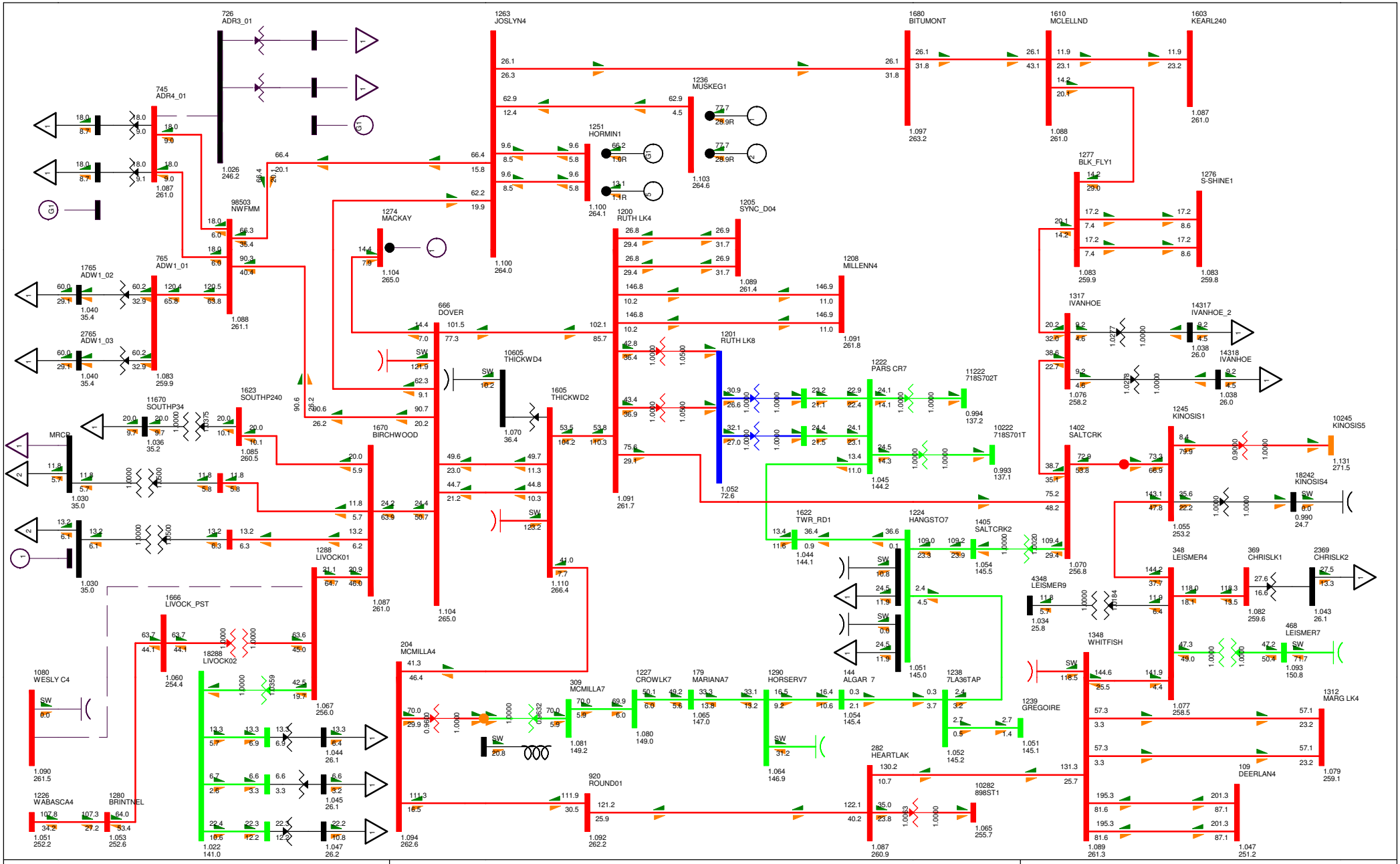

BC - Alberta (IMPORT)775.9 MW

TASMO MODEL; OUTPUT GENERATED 2010-03-01 14:45:14
SWINGBUS 1520 FOR FC-2009-S-2016-04-30:19:24--1--1-0-0
TUE, JUL 26 2011 14:27

2015 NW FMM STUDY

Figure C-2015WP_EX-3

Bus - VOLTAGE (kV/PU)
Branch - MW/Mvar
Equipment - MW/Mvar
100.0%RATEB
1.120OV 0.950UV
kV: <=34.500 <=69.000 <=138.000 <=240.000 <=500.000 >500.000

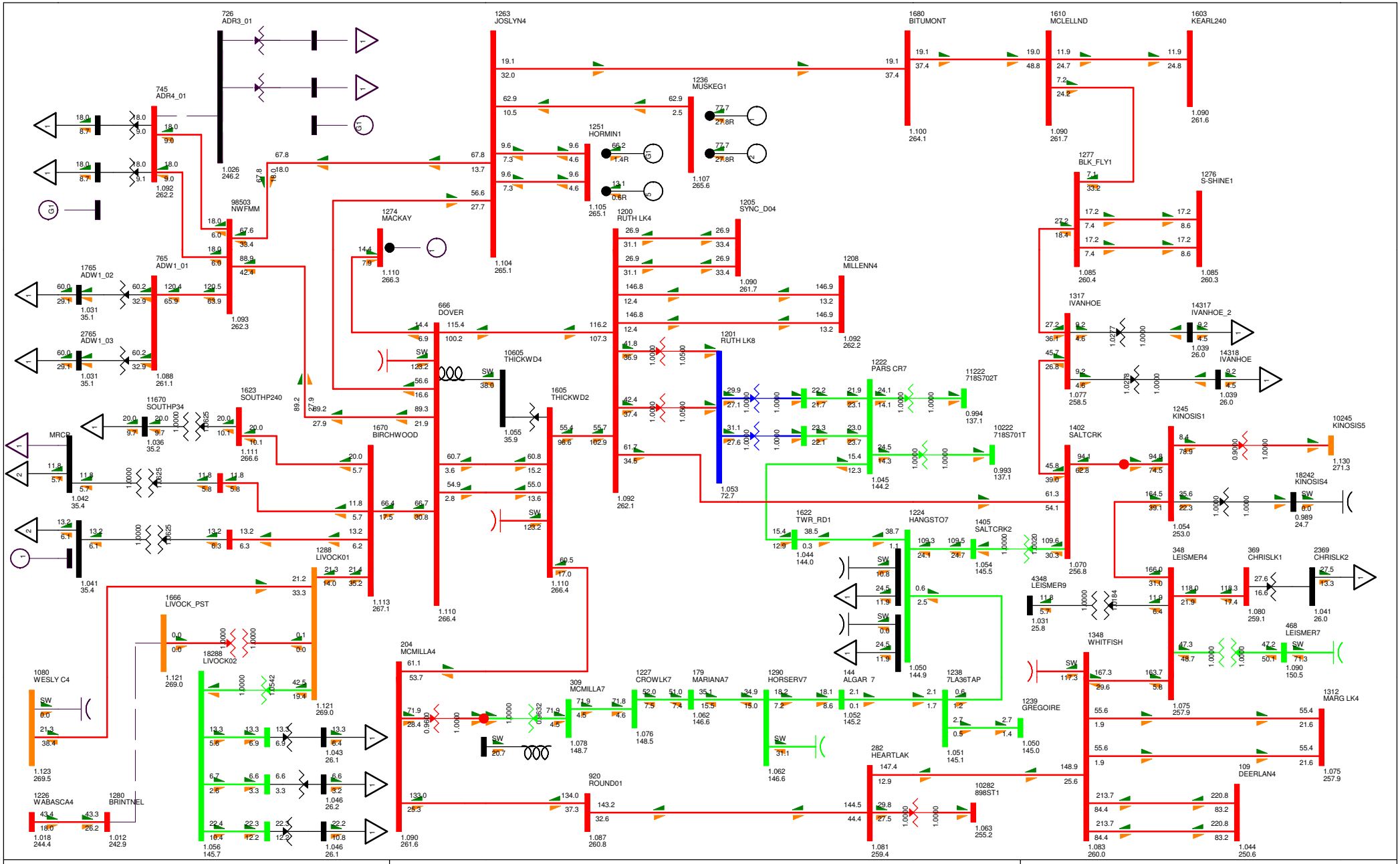

BC - Alberta (IMPORT)781.5 MW

TASMO MODEL; OUTPUT GENERATED 2010-03-01 14:45:14
SWINGBUS 1520 FOR FC-2009-S-2016-04-30:19:24--1--1-0-0
TUE, JUL 26 2011 14:27

2015 NW FMM STUDY

Figure C-2015WP_EX-4

Bus - VOLTAGE (kV/PU)
Branch - MW/Mvar
Equipment - MW/Mvar
100.0%RATEB
1.120OV 0.950UV
kV: <=34.500 <=69.000 <=138.000 <=240.000 <=500.000 >500.000

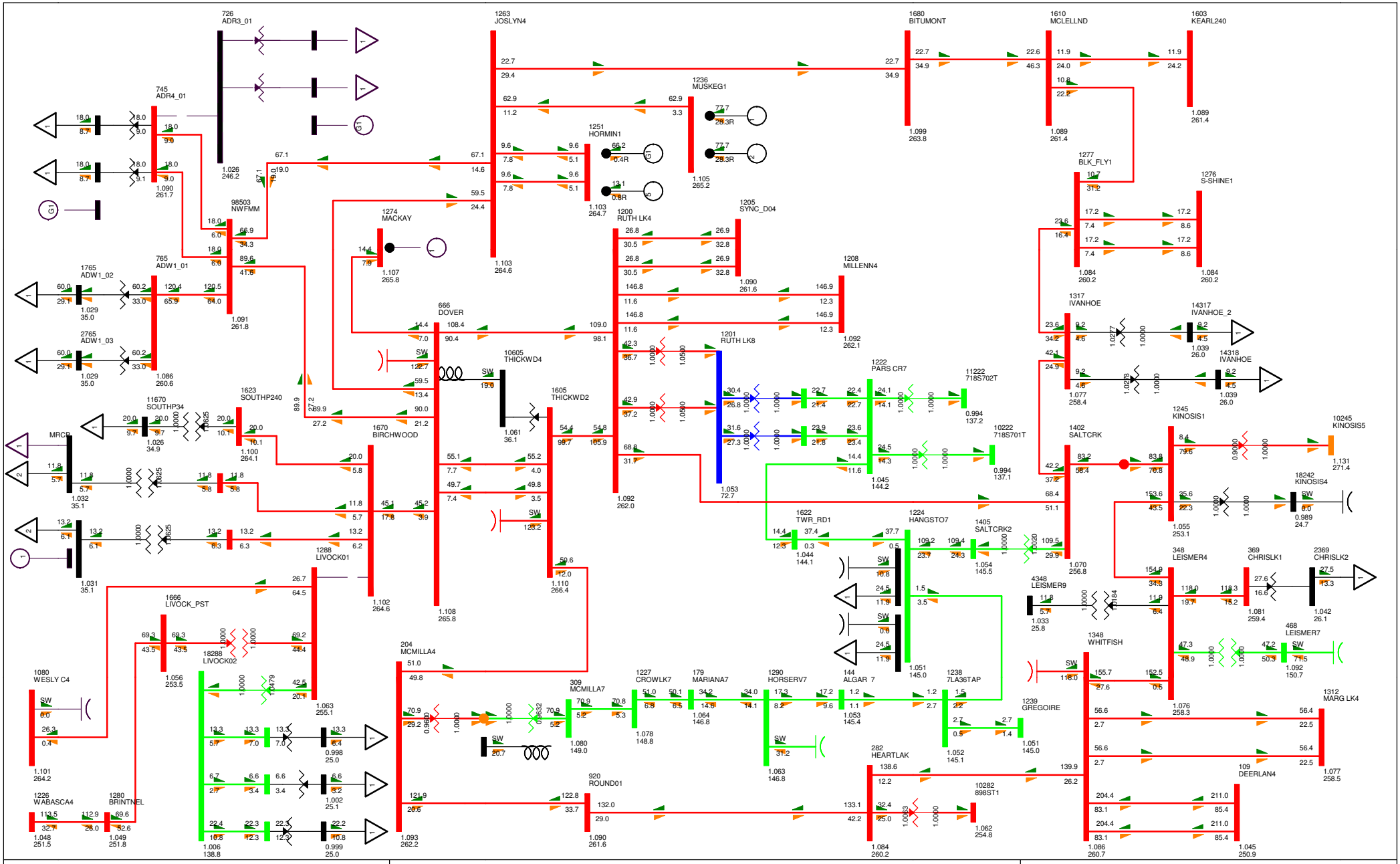

BC - Alberta (IMPORT)775.3 MW

TASMO MODEL; OUTPUT GENERATED 2010-03-01 14:45:14
SWINGBUS 1520 FOR FC-2009-5:2016-04-30:19:24--1--1-0-0
TUE, JUL 26 2011 14:27

2015 NW FMM STUDY

Figure C-2015WP_EX-5

Bus - VOLTAGE (kV/PU)
Branch - MW/Mvar
Equipment - MW/Mvar
100.0%RATEB
1.120OV 0.950UV
kV: <=34.500 <=69.000 <=138.000 <=240.000 <=500.000 >500.000

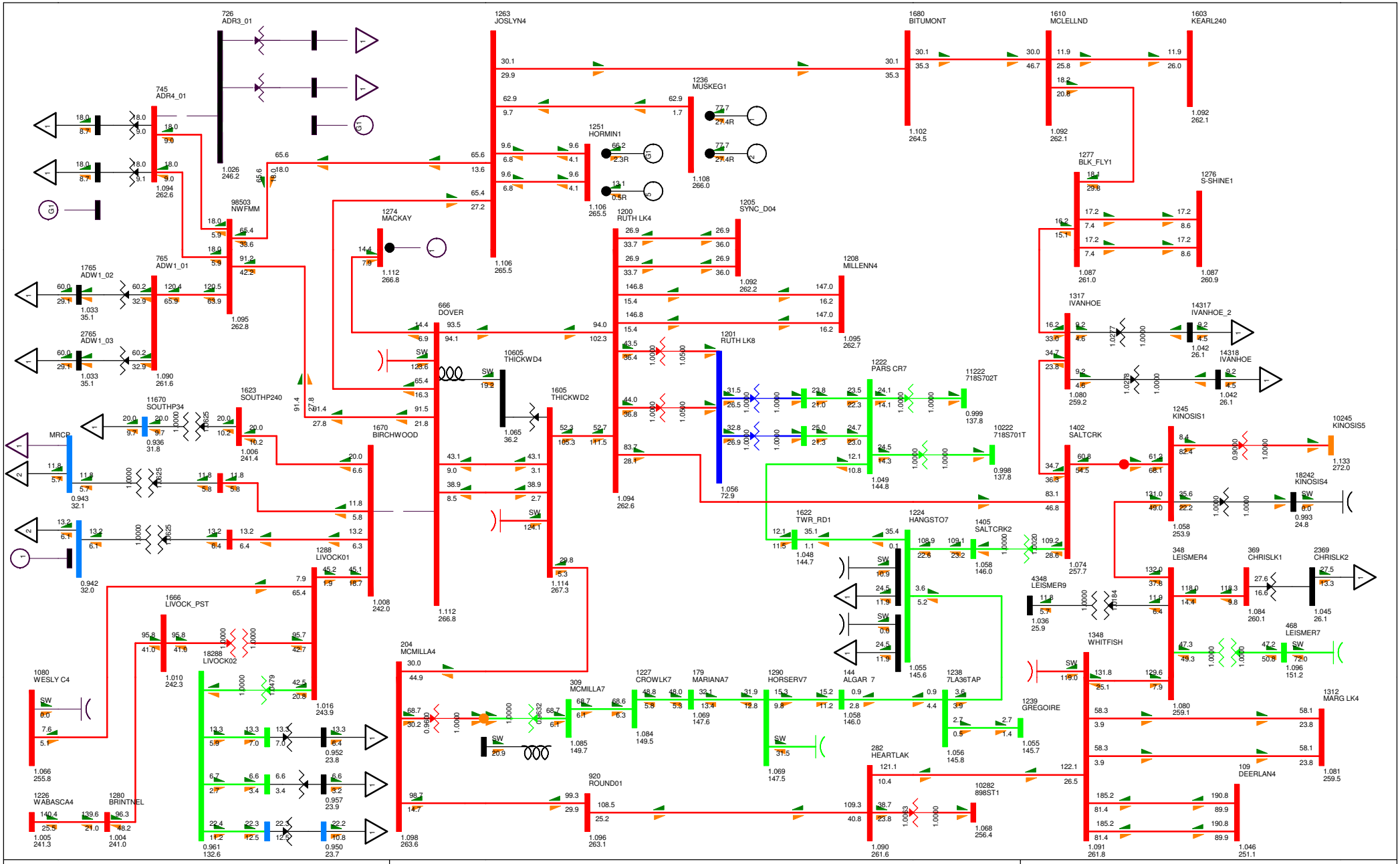
726 ADR3_01
745 ADR4_01
1263 JOSLYN4
1680 BITUMONT
1610 MCLELLND
1603 KEARL240
1236 MUSKEG1
1251 HORMIN1
1277 BLK_FLY1
1276 S-SHINE1
98503 NWFMM
1274 MACKAY
1200 RUTH LK4
1205 SYNC_D04
1765 ADW1_02
765 ADW1_01
2765 ADW1_03
666 DOVER
1208 MILLENN4
1317 IVANHOE
14317 IVANHOE_2
14318 IVANHOE
1201 RUTH LK8
1222 PARS CR7
11222 718S702T
10222 718S701T
1623 SOUTHP240
11670 SOUTHP34
10605 THICKWD4
1605 THICKWD2
1670 BIRCHWOOD
1402 SALTCRK
1245 KINOSIS1
10245 KINOSIS5
18242 KINOSIS4
MRCR
1622 TWR_RD1
1224 HANGSTO7
1405 SALTCRK2
4348 LEISMER9
348 LEISMER4
369 CHRISLK1
2369 CHRISLK2
468 LEISMER7
1348 WHITFISH
1312 MARG LK4
1288 LIVOCK01
1666 LIVOCK_PST
18288 LIVOCK02
204 MCMILLA4
309 MCMILLA7
1227 CROWLK7
179 MARIANA7
1290 HORSERV7
144 ALGAR 7
1238 7LA36TAP
1239 GREGOIRE
282 HEARTLAK
920 ROUND01
10282 898ST1
109 DEERLAN4
1080 WESLY C4
1226 WABASCA4
1280 BRINTNEL
BC - Alberta (IMPORT)782.9 MW
TASMO MODEL; OUTPUT GENERATED 2010-03-01 14:45:14
SWINGBUS 1520 FOR FC-2009-S-2016-04-30:19:24--1--1-0-0
TUE, JUL 26 2011 14:27
2015 NW FMM STUDY
Figure C-2015WP_EX-6
Bus - VOLTAGE (kV/PU)
Branch - MW/Mvar
Equipment - MW/Mvar
100.0%RATEB
1.120OV 0.950UV
kV: <=34.500 <=69.000 <=138.000 <=240.000 <=500.000 >500.000

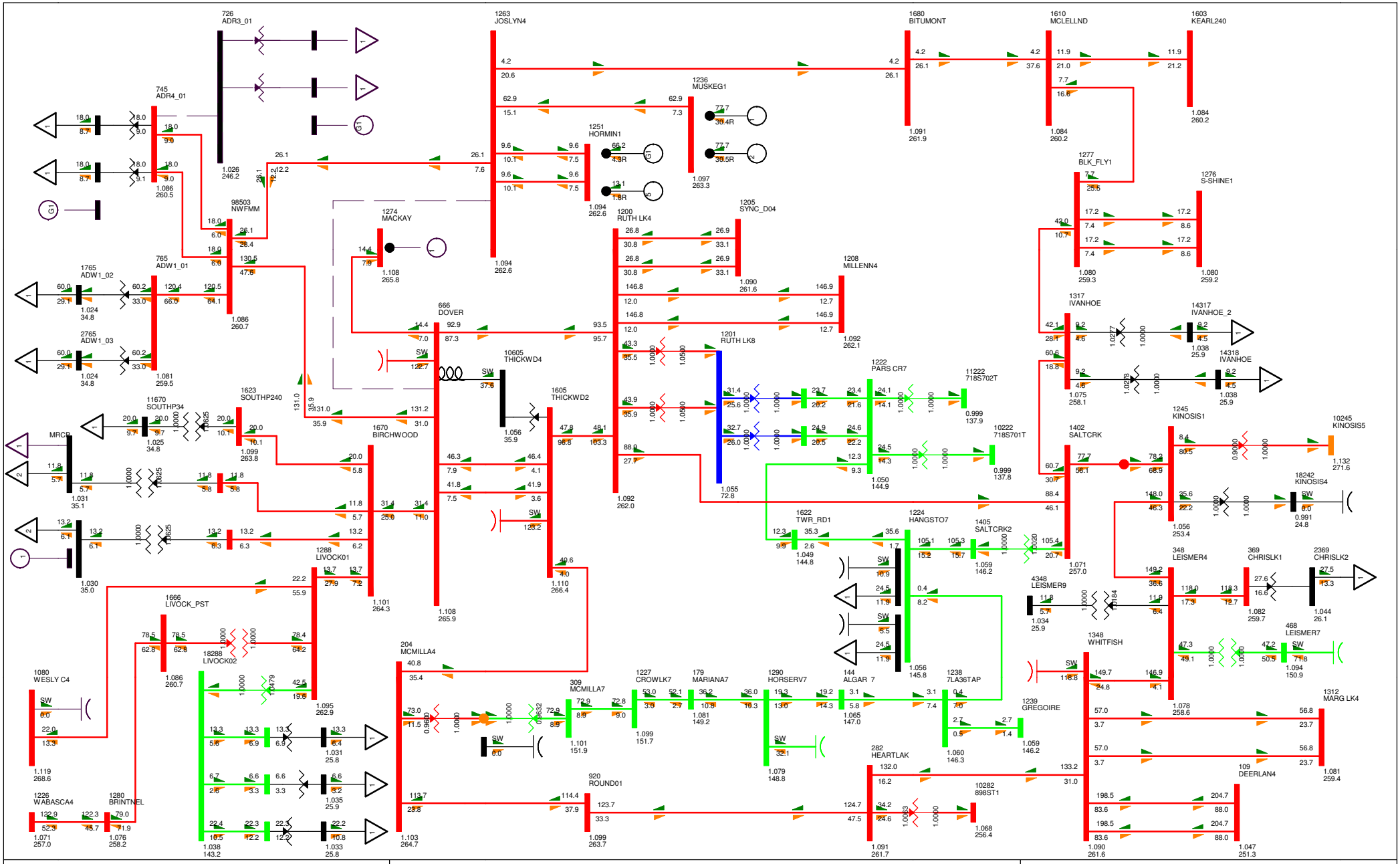

BC - Alberta (IMPORT)774.0 MW

TASMO MODEL; OUTPUT GENERATED 2010-03-01 14:45:14
SWINGBUS 1520 FOR FC-2009-S-2016-04-30:19:24--1--1-0-0
TUE, JUL 26 2011 14:28

2015 NW FMM STUDY

Figure C-2015WP_EX-7

Bus - VOLTAGE (kV/PU)
Branch - MW/Mvar
Equipment - MW/Mvar
100.0%RATEB
1.120OV 0.950UV
kV: <=34.500 <=69.000 <=138.000 <=240.000 <=500.000 >500.000

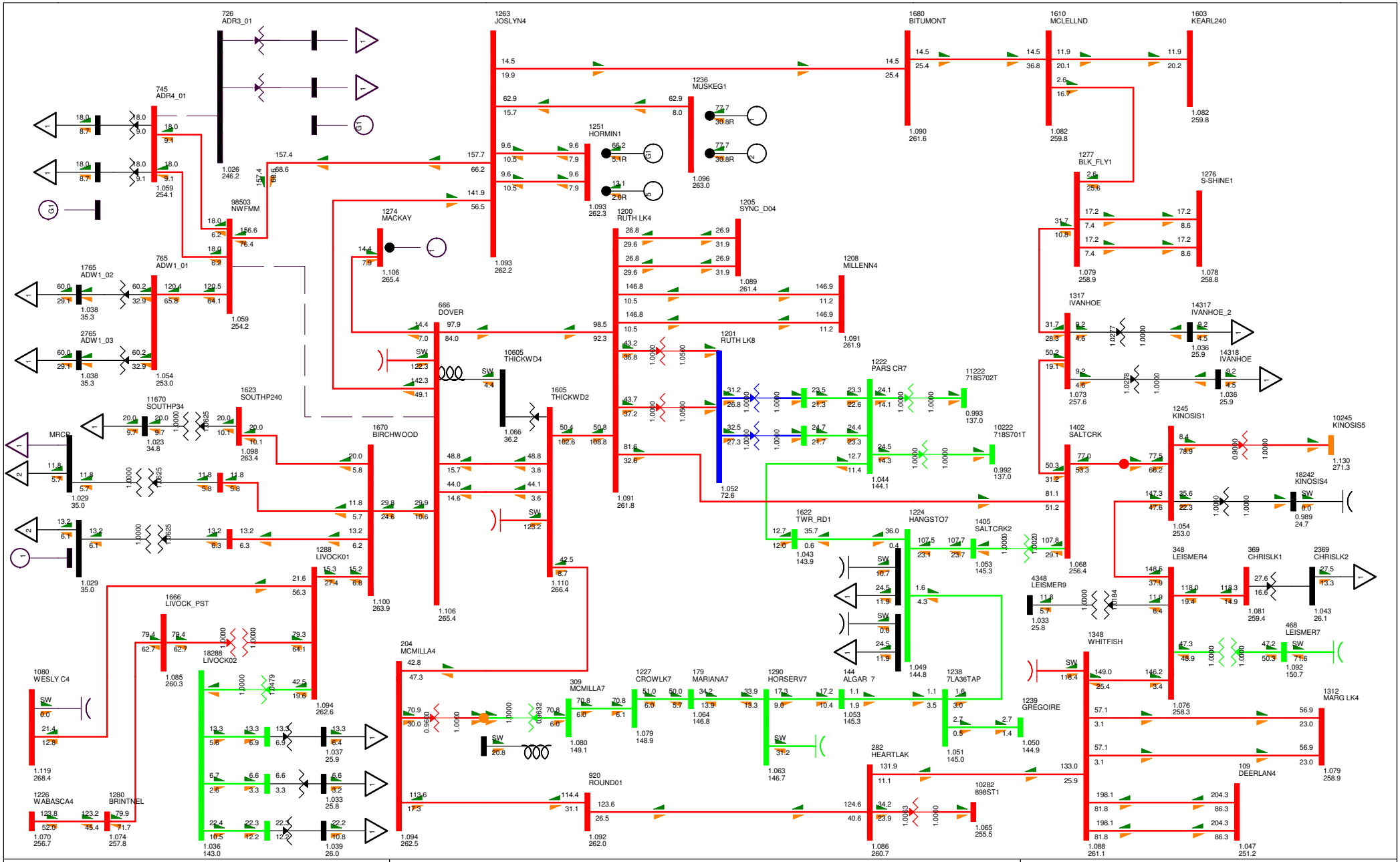

BC - Alberta (IMPORT)775.2 MW

TASMO MODEL; OUTPUT GENERATED 2010-03-01 14:45:14
SWINGBUS 1520 FOR FC-2009-S-2016-04-30:19:24--1--1-0-0
TUE, JUL 26 2011 14:28

2015 NW FMM STUDY

Figure C-2015WP_EX-8

Bus - VOLTAGE (kV/PU)
Branch - MW/Mvar
Equipment - MW/Mvar
100.0%RATEB
1.120OV 0.950UV
kV: <=34.500 <=69.000 <=138.000 <=240.000 <=500.000 >500.000

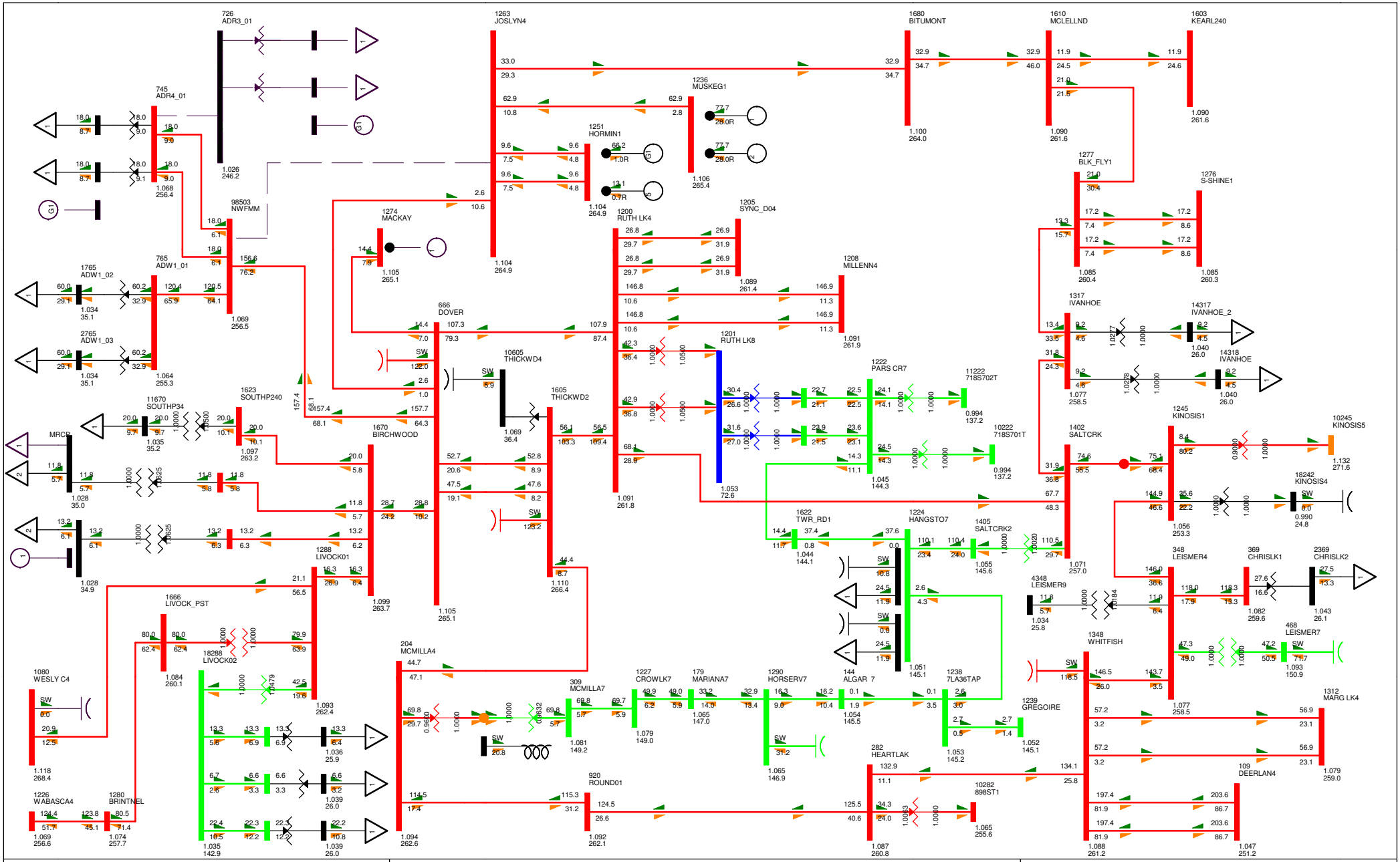

BC - Alberta (IMPORT)774.7 MW

TASMO MODEL; OUTPUT GENERATED 2010-03-01 14:45:14
SWINGBUS 1520 FOR FC-2009-5:2016-04-30:19:24--1--1-0-0
TUE, JUL 26 2011 14:28

2015 NW FMM STUDY

Figure C-2015WP_EX-9

Bus - VOLTAGE (kV/PU)
Branch - MW/Mvar
Equipment - MW/Mvar
100.0%RATEB
1.120OV 0.950UV
kV: <=34.500 <=69.000 <=138.000 <=240.000 <=500.000 >500.000

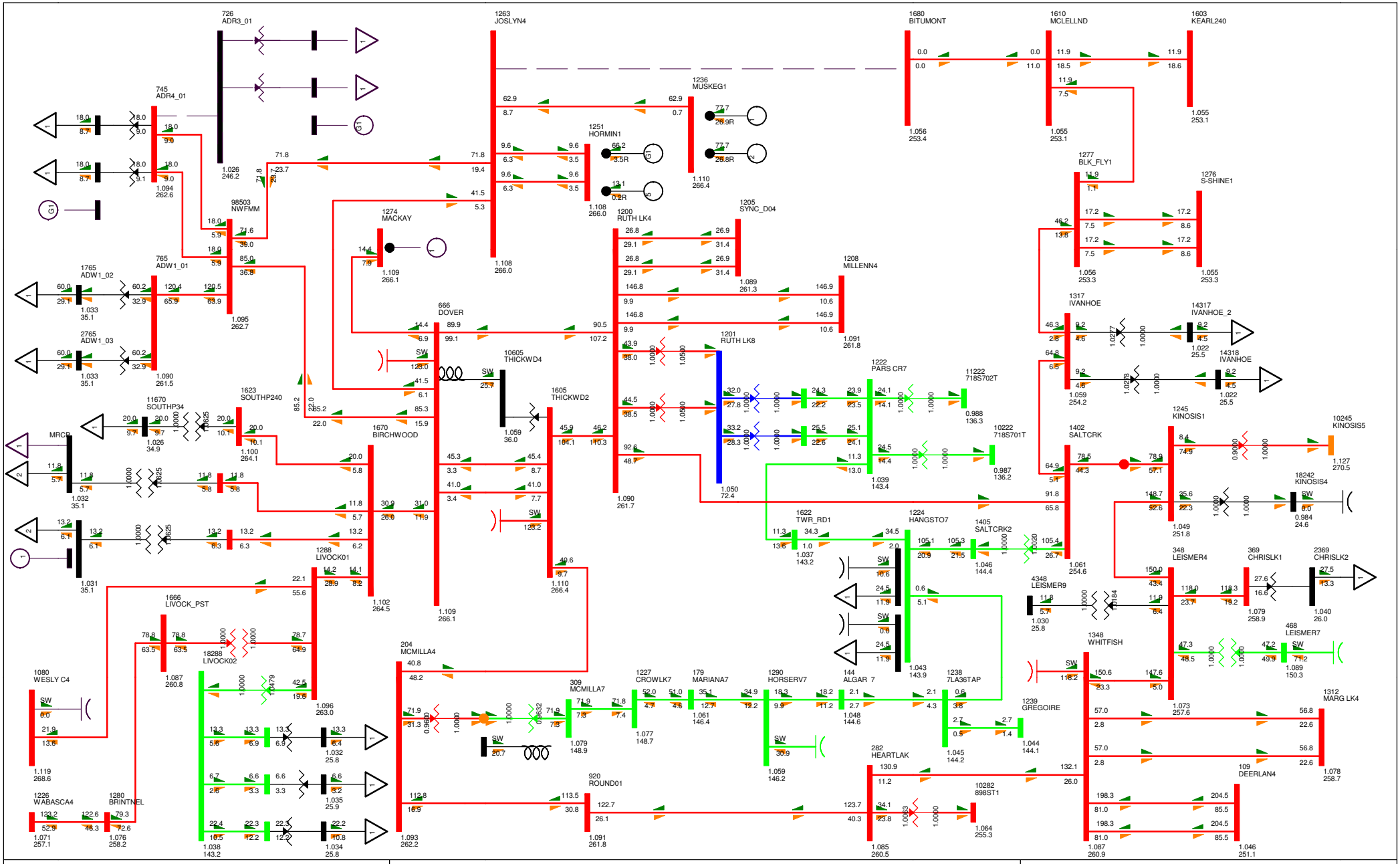

BC - Alberta (IMPORT)774.4 MW

TASMO MODEL; OUTPUT GENERATED 2010-03-01 14:45:14
SWINGBUS 1520 FOR FC-2009-S-2016-04-30:19:24--1--1-0-0
TUE, JUL 26 2011 14:28

2015 NW FMM STUDY

Figure C-2015WP_EX-10

Bus - VOLTAGE (kV/PU)
Branch - MW/Mvar
Equipment - MW/Mvar
100.0%RATEB
1.120OV 0.950UV
kV: <=34.500 <=69.000 <=138.000 <=240.000 <=500.000 >500.000

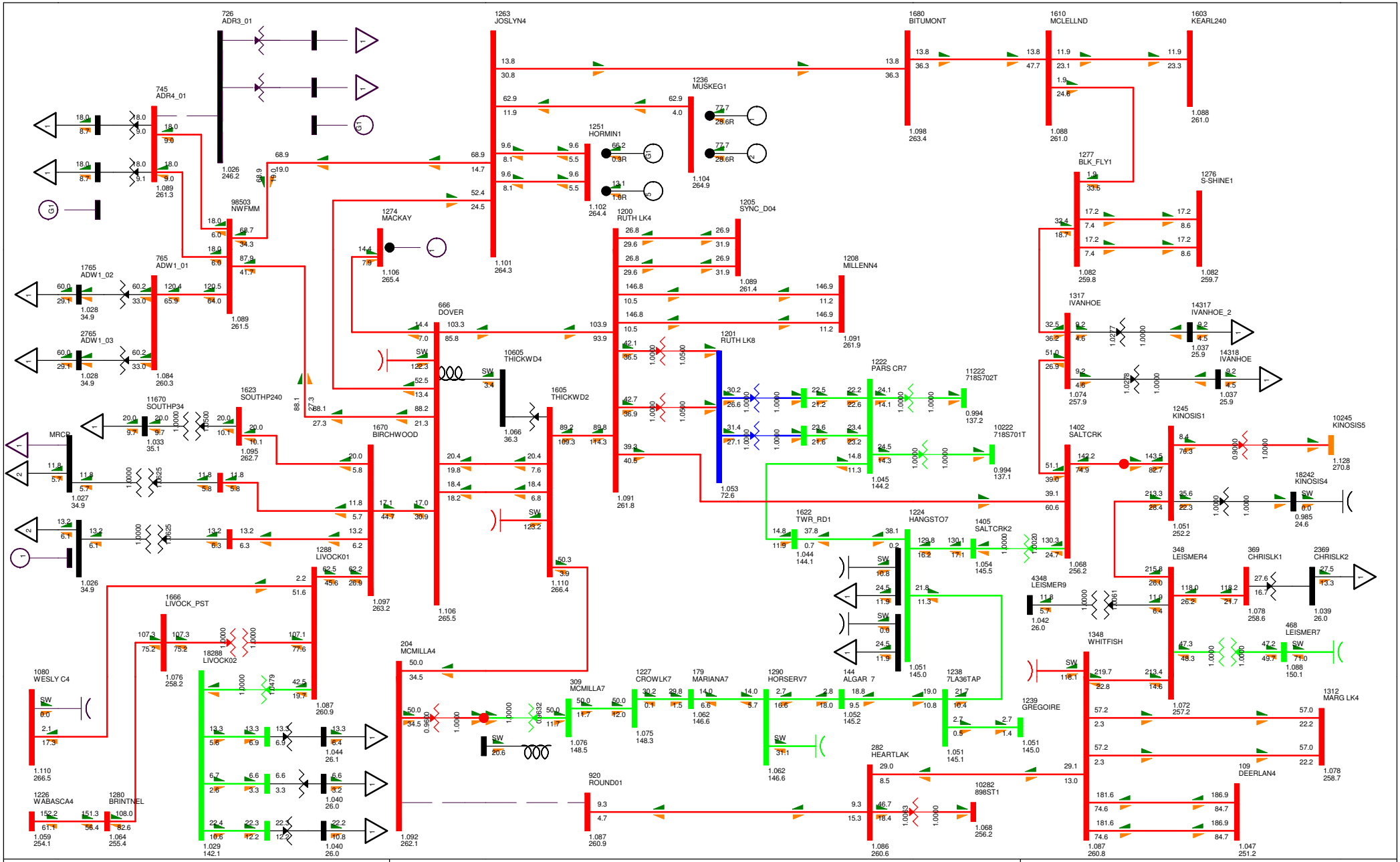

BC - Alberta (IMPORT)783.2 MW

TASMO MODEL; OUTPUT GENERATED 2010-03-01 14:45:14
SWINGBUS 1520 FOR FC-2009-S-2016-04-30:19:24--1--1-0-0
TUE, JUL 26 2011 14:28

2015 NW FMM STUDY

Figure C-2015WP_EX-11

Bus - VOLTAGE (kV/PU)
Branch - MW/Mvar
Equipment - MW/Mvar
100.0%RATEB
1.120OV 0.950UV
kV: <=34.500 <=69.000 <=138.000 <=240.000 <=500.000 >500.000

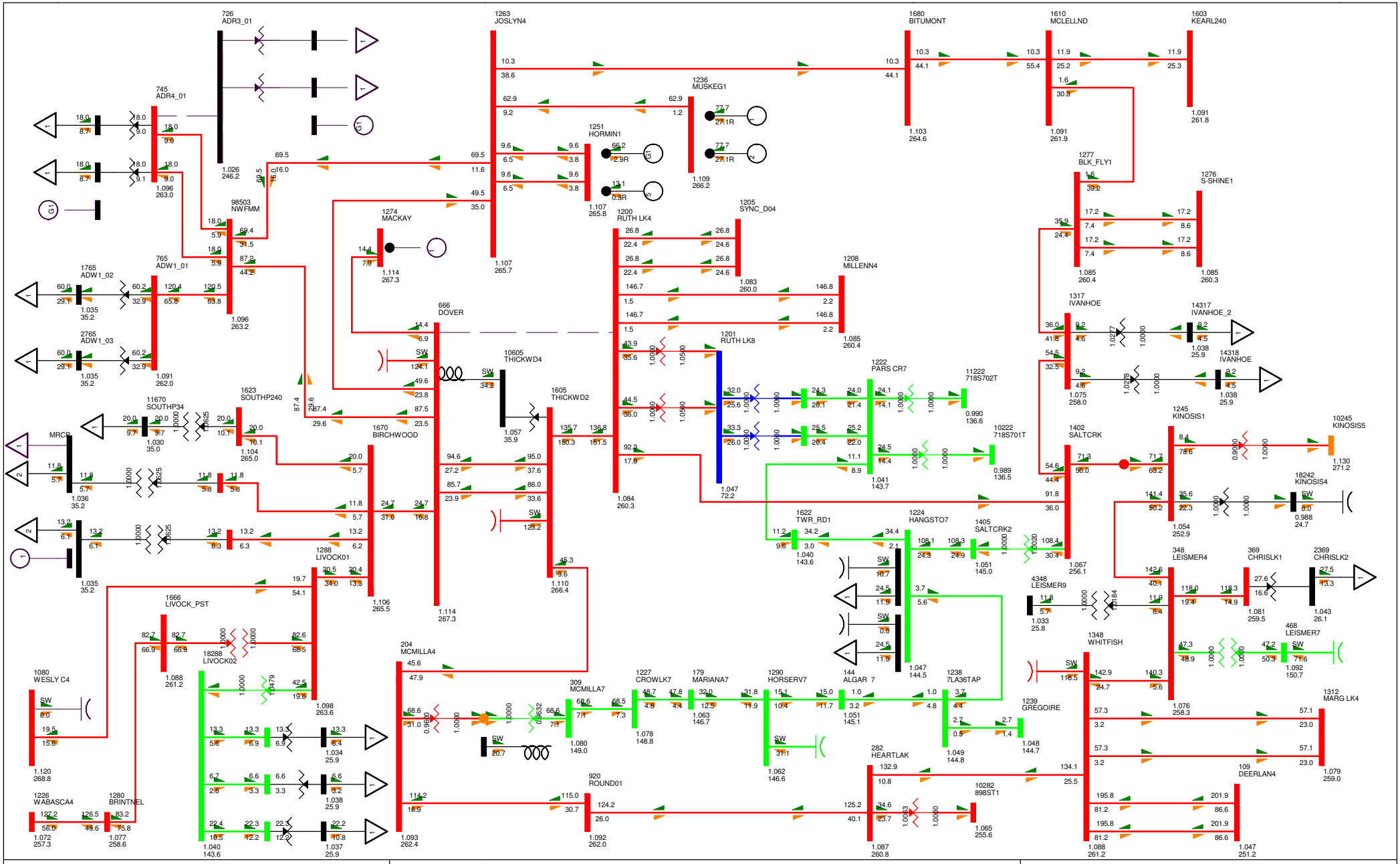

BC - Alberta (IMPORT)775.4 MW

TASMO MODEL; OUTPUT GENERATED 2010-03-01 14:45:14
SWINGBUS 1520 FOR FC-2009-5:2016-04-30:19:24--1--1-0-0
TUE, JUL 26 2011 14:28

2015 NW FMM STUDY

Figure C-2015WP_EX-12

Bus - VOLTAGE (kV/PU)
Branch - MW/Mvar
Equipment - MW/Mvar
100.0%RATEB
1.120OV 0.950UV
kV: <=34.500 <=69.000 <=138.000 <=240.000 <=500.000 >500.000

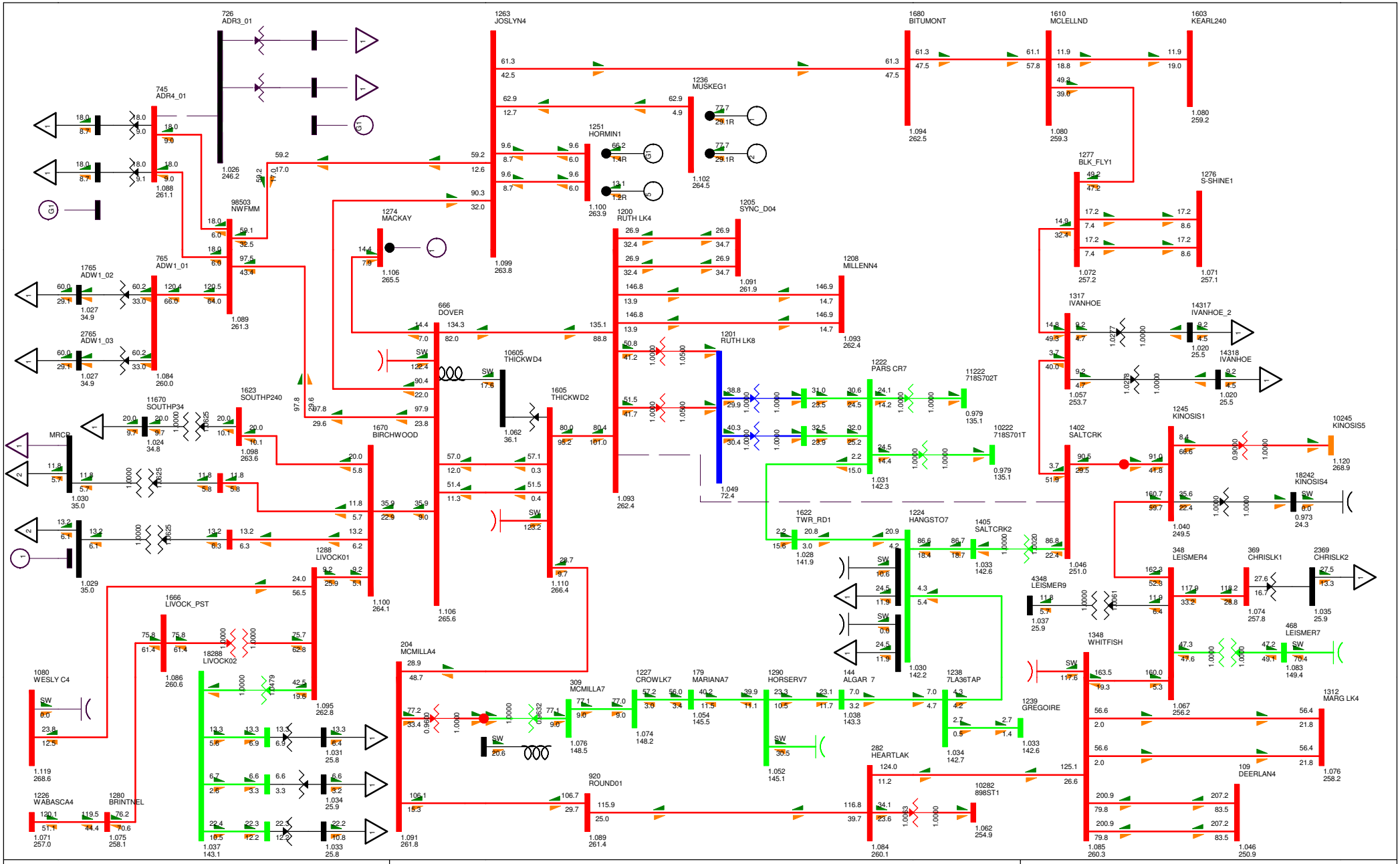

BC - Alberta (IMPORT)775.0 MW

TASMO MODEL; OUTPUT GENERATED 2010-03-01 14:45:14
SWINGBUS 1520 FOR FC-2009-S-2016-04-30:19:24--1--1-0-0
TUE, JUL 26 2011 14:28

2015 NW FMM STUDY

Figure C-2015WP_EX-13

Bus - VOLTAGE (kV/PU)
Branch - MW/Mvar
Equipment - MW/Mvar
100.0%RATEB
1.120OV 0.950UV
kV: <=34.500 <=69.000 <=138.000 <=240.000 <=500.000 >500.000

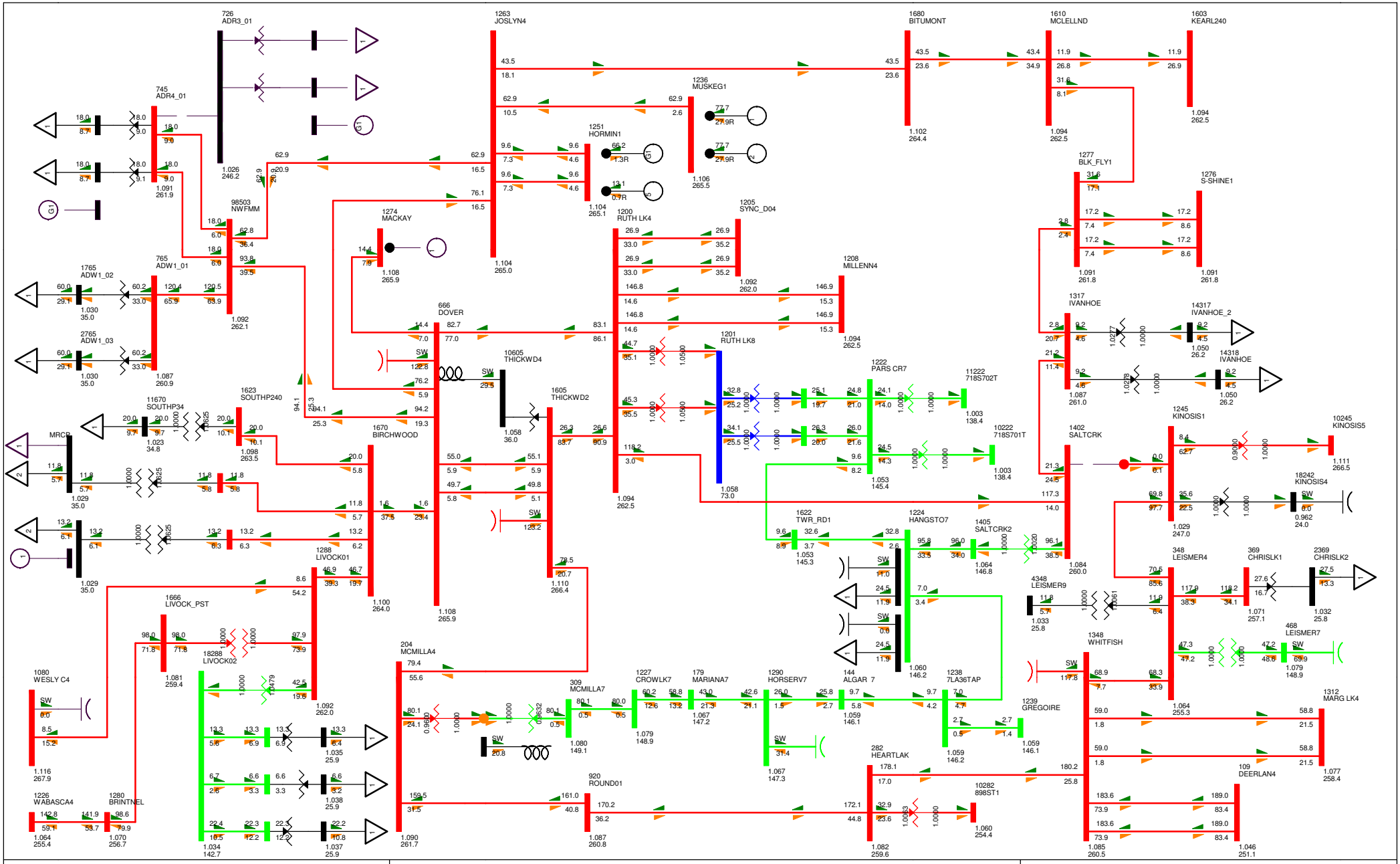

BC - Alberta (IMPORT)780.2 MW

TASMO MODEL; OUTPUT GENERATED 2010-03-01 14:45:14
SWINGBUS 1520 FOR FC-2009-5:2016-04-30:19:24--1--1-0-0
TUE, JUL 26 2011 14:28

2015 NW FMM STUDY

Figure C-2015WP_EX-14

Bus - VOLTAGE (kV/PU)
Branch - MW/Mvar
Equipment - MW/Mvar
100.0%RATEB
1.120OV 0.950UV
kV: <=34.500 <=69.000 <=138.000 <=240.000 <=500.000 >500.000

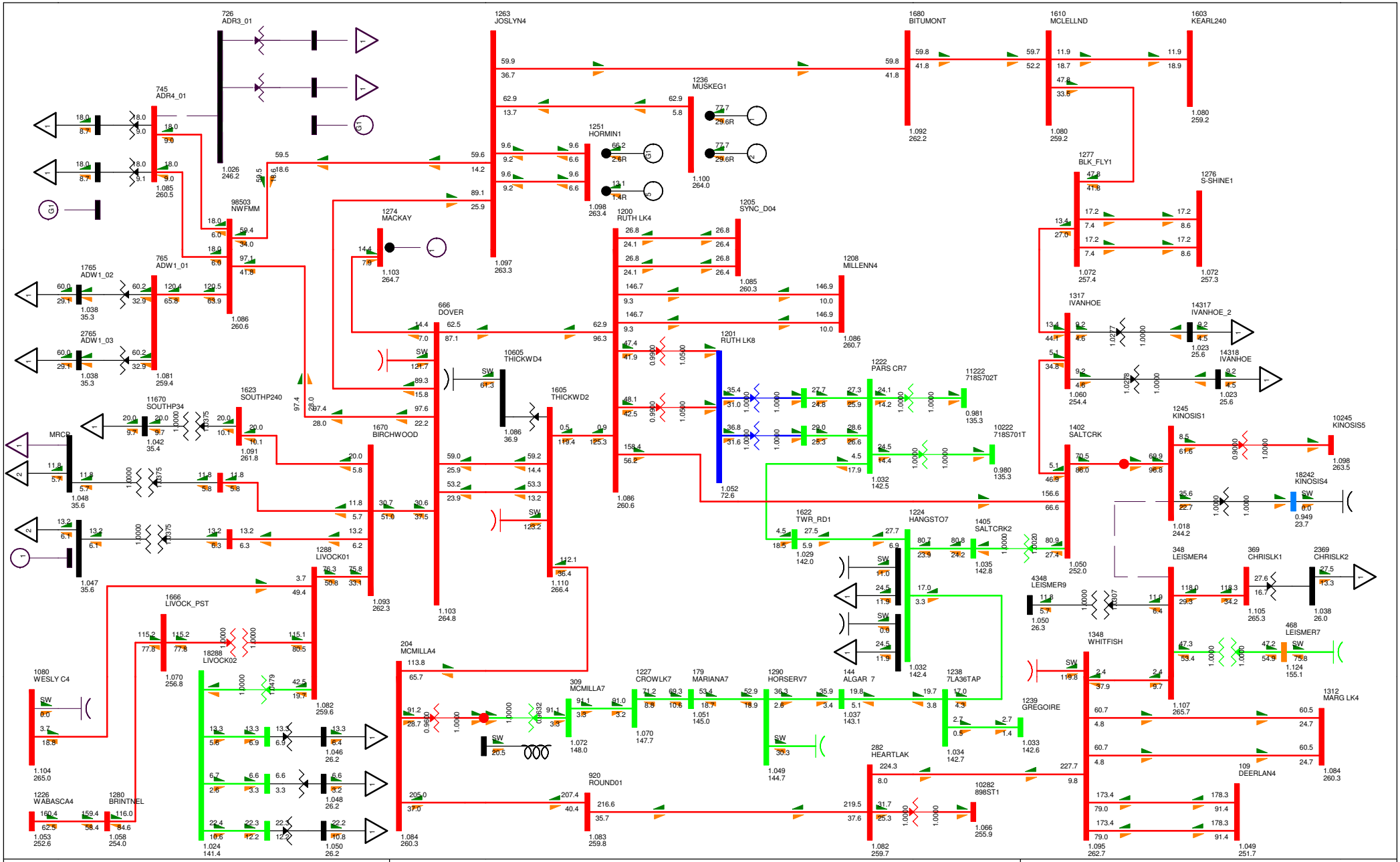
726 ADR3_01
745 ADR4_01
1263 JOSLYN4
1680 BITUMONT
1610 MCLELLND
1603 KEARL240
1236 MUSKEG1
1251 HORMIN1
1277 BLK_FLY1
1276 S-SHINE1
98503 NWFMM
1274 MACKAY
1200 RUTH LK4
1205 SYNC_D04
1765 ADW1_02
765 ADW1_01
2765 ADW1_03
1208 MILLENN4
1317 IVANHOE
14317 IVANHOE_2
14318 IVANHOE
666 DOVER
1201 RUTH LK8
1222 PARS CR7
11222 718S702T
10222 718S701T
11670 SOUTHP34
1623 SOUTHP240
10605 THICKWD4
1605 THICKWD2
1670 BIRCHWOOD
MRCD
1622 TWR_RD1
1224 HANGSTO7
1405 SALTCRK2
1402 SALTCRK
1245 KINOSIS1
10245 KINOSIS5
18242 KINOSIS4
4348 LEISMER9
348 LEISMER4
369 CHRISLK1
2369 CHRISLK2
468 LEISMER7
1348 WHITFISH
1312 MARG LK4
1239 GREGOIRE
109 DEERLAN4
1288 LIVOCK01
1666 LIVOCK_PST
18288 LIVOCK02
204 MCMILLA4
309 MCMILLA7
1227 CROWLK7
179 MARIANA7
1290 HORSERV7
144 ALGAR 7
1238 7LA36TAP
282 HEARTLAK
920 ROUND01
10282 898ST1
1080 WESLY C4
1226 WABASCA4
1280 BRINTNEL
BC - Alberta (IMPORT)794.0 MW
TASMO MODEL; OUTPUT GENERATED 2010-03-01 14:45:14
SWINGBUS 1520 FOR FC-2009-S-2016-04-30:19:24--1--1-0-0
TUE, JUL 26 2011 14:28
2015 NW FMM STUDY
Figure C-2015WP_EX-15
Bus - VOLTAGE (kV/PU)
Branch - MW/Mvar
Equipment - MW/Mvar
100.0%RATEB
1.120OV 0.950UV
kV: <=34.500 <=69.000 <=138.000 <=240.000 <=500.000 >500.000

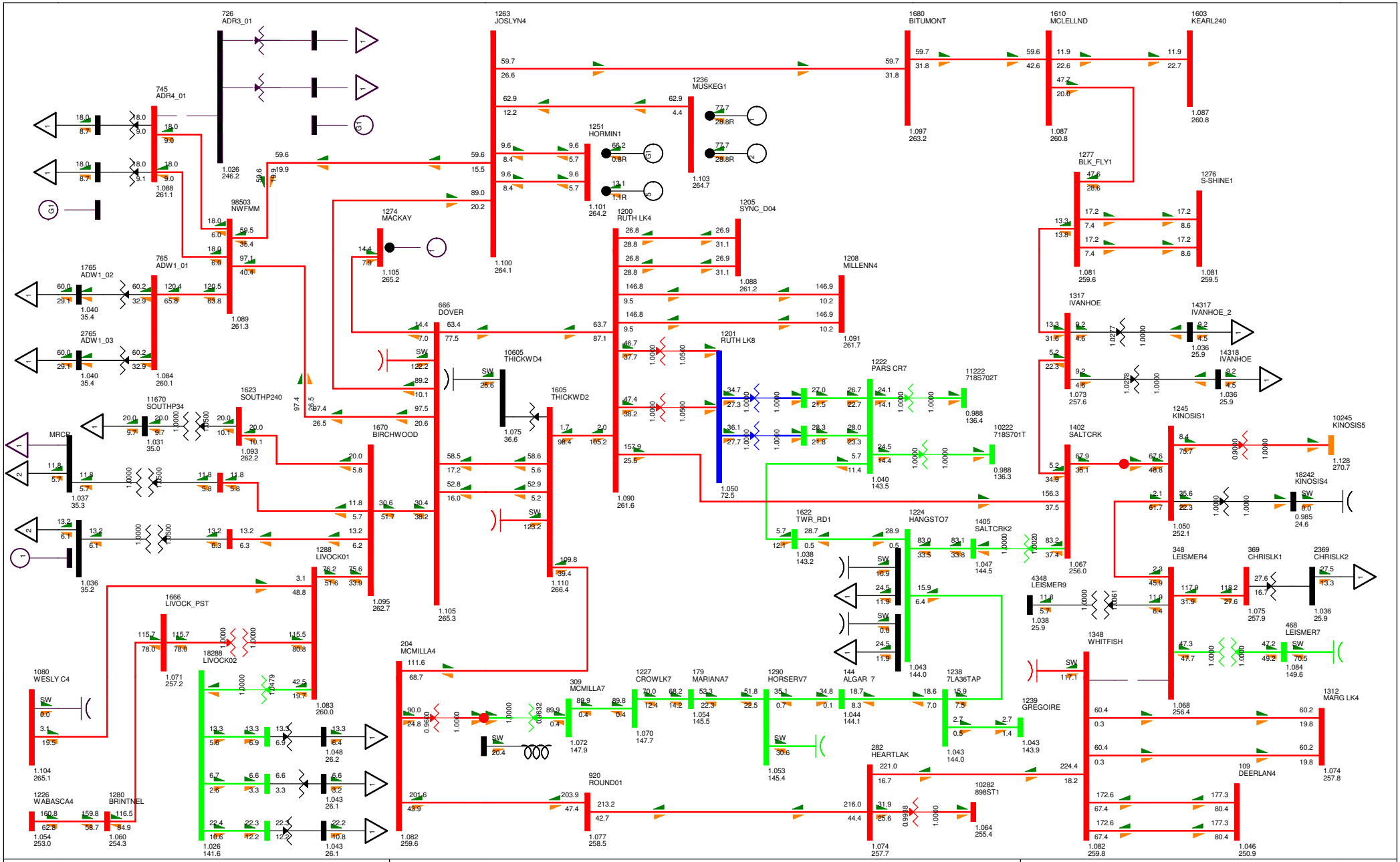

BC - Alberta (IMPORT)792.3 MW

TASMO MODEL; OUTPUT GENERATED 2010-03-01 14:45:14
SWINGBUS 1520 FOR FC-2009-S-2016-04-30:19:24--1--1-0-0
TUE, JUL 26 2011 14:28

2015 NW FMM STUDY

Figure C-2015WP_EX-16

Bus - VOLTAGE (kV/PU)
Branch - MW/Mvar
Equipment - MW/Mvar
100.0%RATEB
1.120OV 0.950UV
kV: <=34.500 <=69.000 <=138.000 <=240.000 <=500.000 >500.000

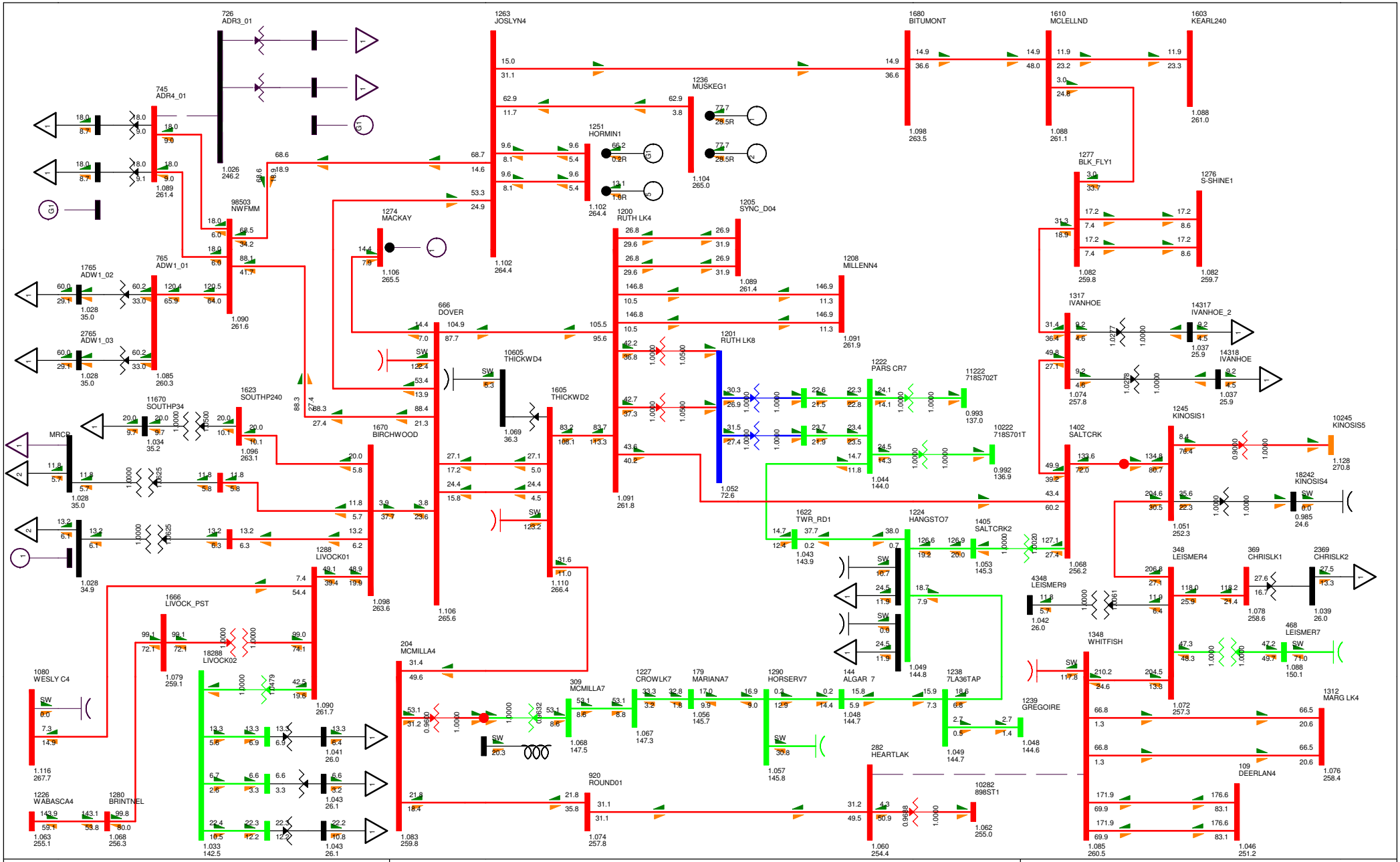
726 ADR3_01
745 ADR4_01
765 ADW1_01
1765 ADW1_02
2765 ADW1_03
98503 NWFMM
1623 SOUTHP240
11670 SOUTHP34
MRCB
1670 BIRCHWOOD
1288 LIVOCK01
1666 LIVOCK_PST
18288 LIVOCK02
1080 WESLY C4
1226 WABASCA4
1280 BRINTNEL
1263 JOSLYN4
1236 MUSKEG1
1251 HORMIN1
1274 MACKAY
666 DOVER
10605 THICKWD4
1605 THICKWD2
1200 RUTH LK4
1201 RUTH LK8
1205 SYNC_D04
1208 MILLENN4
1222 PARS CR7
11222 718S702T
10222 718S701T
1622 TWR_RD1
1224 HANGSTO7
1405 SALTCRK2
4348 LEISMER9
1239 GREGOIRE
1680 BITUMONT
1610 MCLELLND
1603 KEARL240
1277 BLK_FLY1
1276 S-SHINE1
1317 IVANHOE
14317 IVANHOE_2
14318 IVANHOE
1402 SALTCRK
1245 KINOSIS1
10245 KINOSIS5
18242 KINOSIS4
348 LEISMER4
369 CHRISLK1
2369 CHRISLK2
468 LEISMER7
1348 WHITFISH
1312 MARG LK4
109 DEERLAN4
204 MCMILLA4
309 MCMILLA7
1227 CROWLK7
179 MARIANA7
1290 HORSERV7
144 ALGAR 7
1238 7LA36TAP
282 HEARTLAK
920 ROUND01
10282 898ST1
BC - Alberta (IMPORT)790.7 MW
TASMO MODEL; OUTPUT GENERATED 2010-03-01 14:45:14
SWINGBUS 1520 FOR FC-2009-S-2016-04-30:19:24--1--1-0-0
TUE, JUL 26 2011 14:28
2015 NW FMM STUDY
Figure C-2015WP_EX-17
Bus - VOLTAGE (kV/PU)
Branch - MW/Mvar
Equipment - MW/Mvar
100.0%RATEB
1.120OV 0.950UV
kV: <=34.500 <=69.000 <=138.000 <=240.000 <=500.000 >500.000

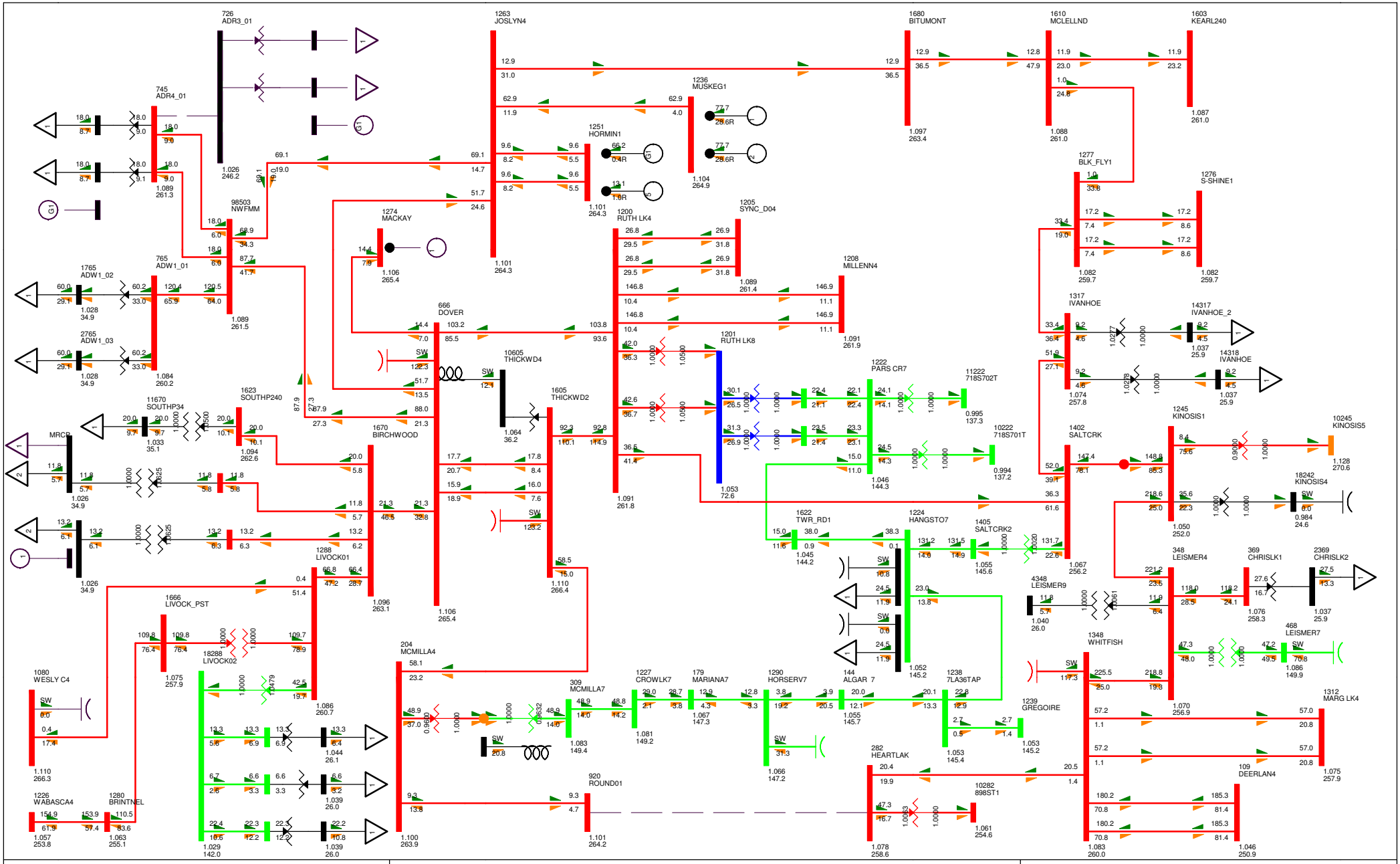
726 ADR3_01
745 ADR4_01
1263 JOSLYN4
1680 BITUMONT
1610 MCLELLND
1603 KEARL240
1236 MUSKEG1
1251 HORMIN1
1277 BLK_FLY1
1276 S-SHINE1
98503 NWFMM
1274 MACKAY
1200 RUTH LK4
1205 SYNC_D04
1765 ADW1_02
765 ADW1_01
2765 ADW1_03
1208 MILLENN4
1317 IVANHOE
14317 IVANHOE_2
14318 IVANHOE
666 DOVER
1201 RUTH LK8
1222 PARS CR7
11222 718S702T
10222 718S701T
1623 SOUTHP240
11670 SOUTHP34
10605 THICKWD4
1605 THICKWD2
1670 BIRCHWOOD
MRCD
1622 TWR_RD1
1224 HANGSTO7
1405 SALTCRK2
1402 SALTCRK
1245 KINOSIS1
10245 KINOSIS5
18242 KINOSIS4
4348 LEISMER9
348 LEISMER4
369 CHRISLK1
2369 CHRISLK2
468 LEISMER7
1348 WHITFISH
1239 GREGOIRE
1312 MARG LK4
109 DEERLAN4
1288 LIVOCK01
1666 LIVOCK_PST
18288 LIVOCK02
1080 WESLY C4
1226 WABASCA4
1280 BRINTNEL
204 MCMILLA4
309 MCMILLA7
1227 CROWLK7
179 MARIANA7
1290 HORSERV7
144 ALGAR 7
1238 7LA36TAP
282 HEARTLAK
10282 898ST1
920 ROUND01
BC - Alberta (IMPORT)785.0 MW
TASMO MODEL; OUTPUT GENERATED 2010-03-01 14:45:14
SWINGBUS 1520 FOR FC-2009-5:2016-04-30:19:24--1--1-0-0
TUE, JUL 26 2011 14:28
2015 NW FMM STUDY
Figure C-2015WP_EX-18
Bus - VOLTAGE (kV/PU)
Branch - MW/Mvar
Equipment - MW/Mvar
100.0%RATEB
1.120OV 0.950UV
kV: <=34.500 <=69.000 <=138.000 <=240.000 <=500.000 >500.000

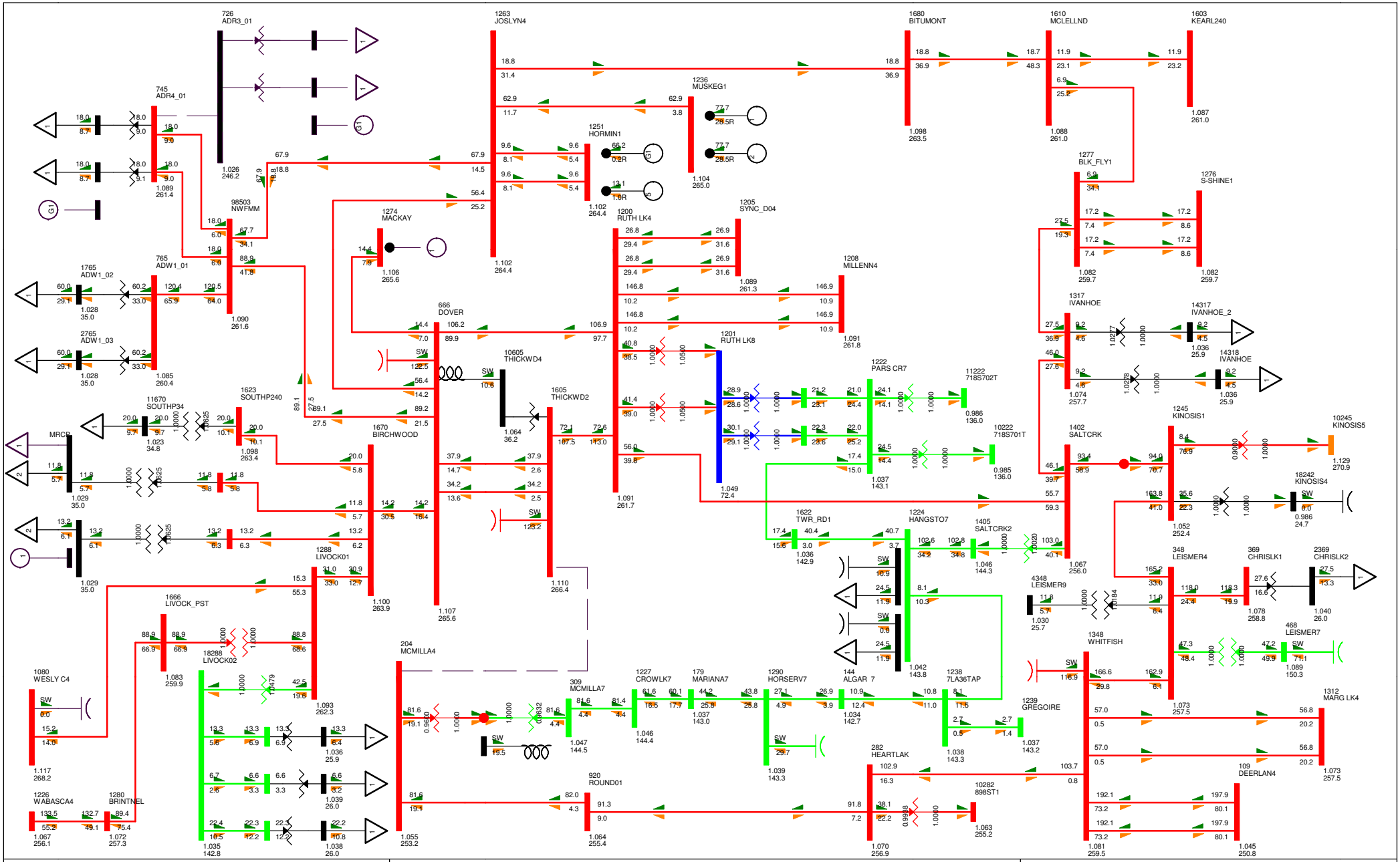

BC - Alberta (IMPORT)777.0 MW

TASMO MODEL; OUTPUT GENERATED 2010-03-01 14:45:14
SWINGBUS 1520 FOR FC-2009-S-2016-04-30:19:24--1--1-0-0
TUE, JUL 26 2011 14:28

2015 NW FMM STUDY

Figure C-2015WP_EX-19

Bus - VOLTAGE (kV/PU)
Branch - MW/Mvar
Equipment - MW/Mvar
100.0%RATEB
1.120OV 0.950UV
kV: <=34.500 <=69.000 <=138.000 <=240.000 <=500.000 >500.000

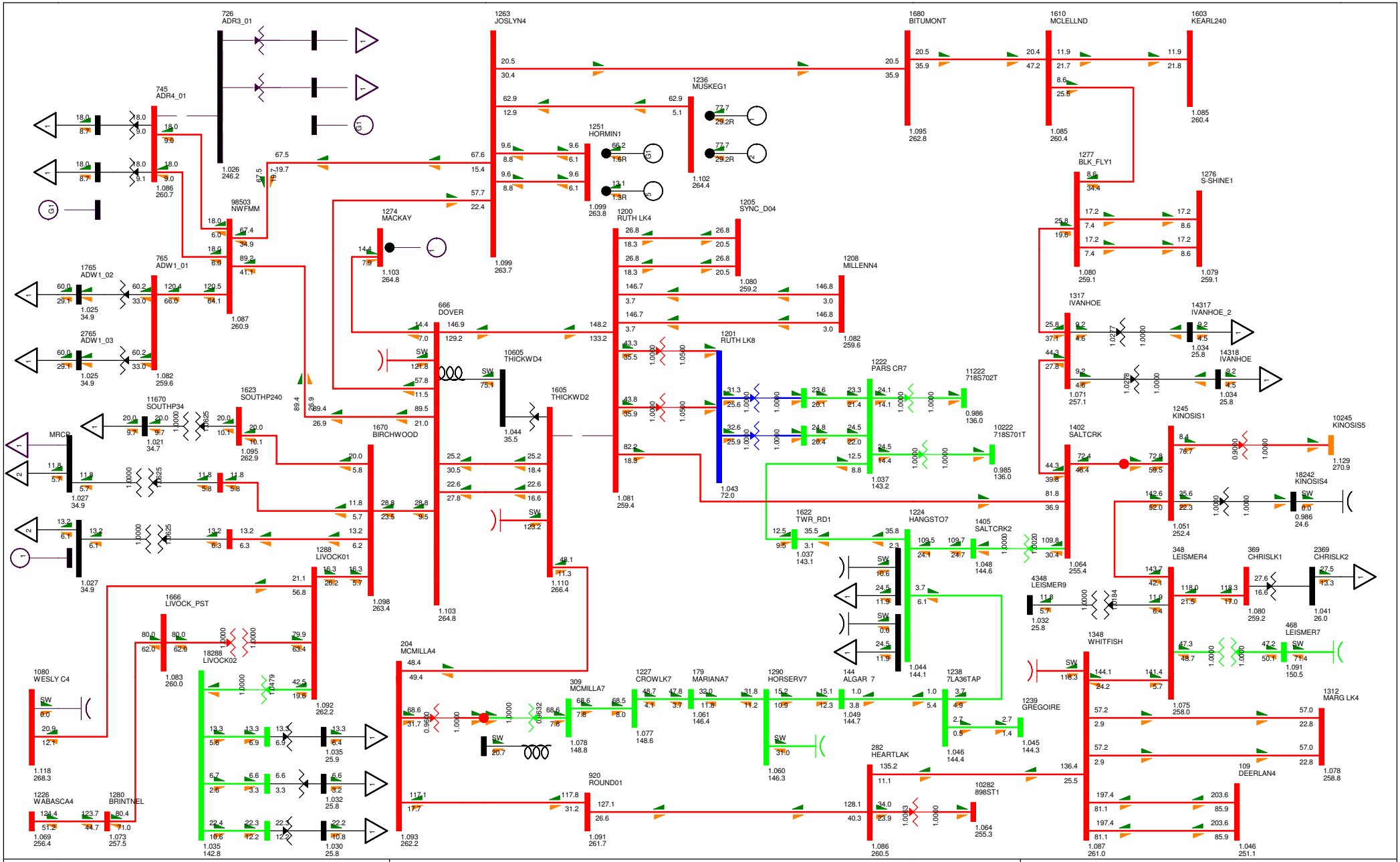

BC - Alberta (IMPORT)775.0 MW

TASMO MODEL; OUTPUT GENERATED 2010-03-01 14:45:14
SWINGBUS 1520 FOR FC-2009-S-2016-04-30:19:24--1--1-0-0
TUE, JUL 26 2011 14:28

2015 NW FMM STUDY

Figure C-2015WP_EX-20

Bus - VOLTAGE (kV/PU)
Branch - MW/Mvar
Equipment - MW/Mvar
100.0%RATEB
1.120OV 0.950UV
kV: <=34.500 <=69.000 <=138.000 <=240.000 <=500.000 >500.000

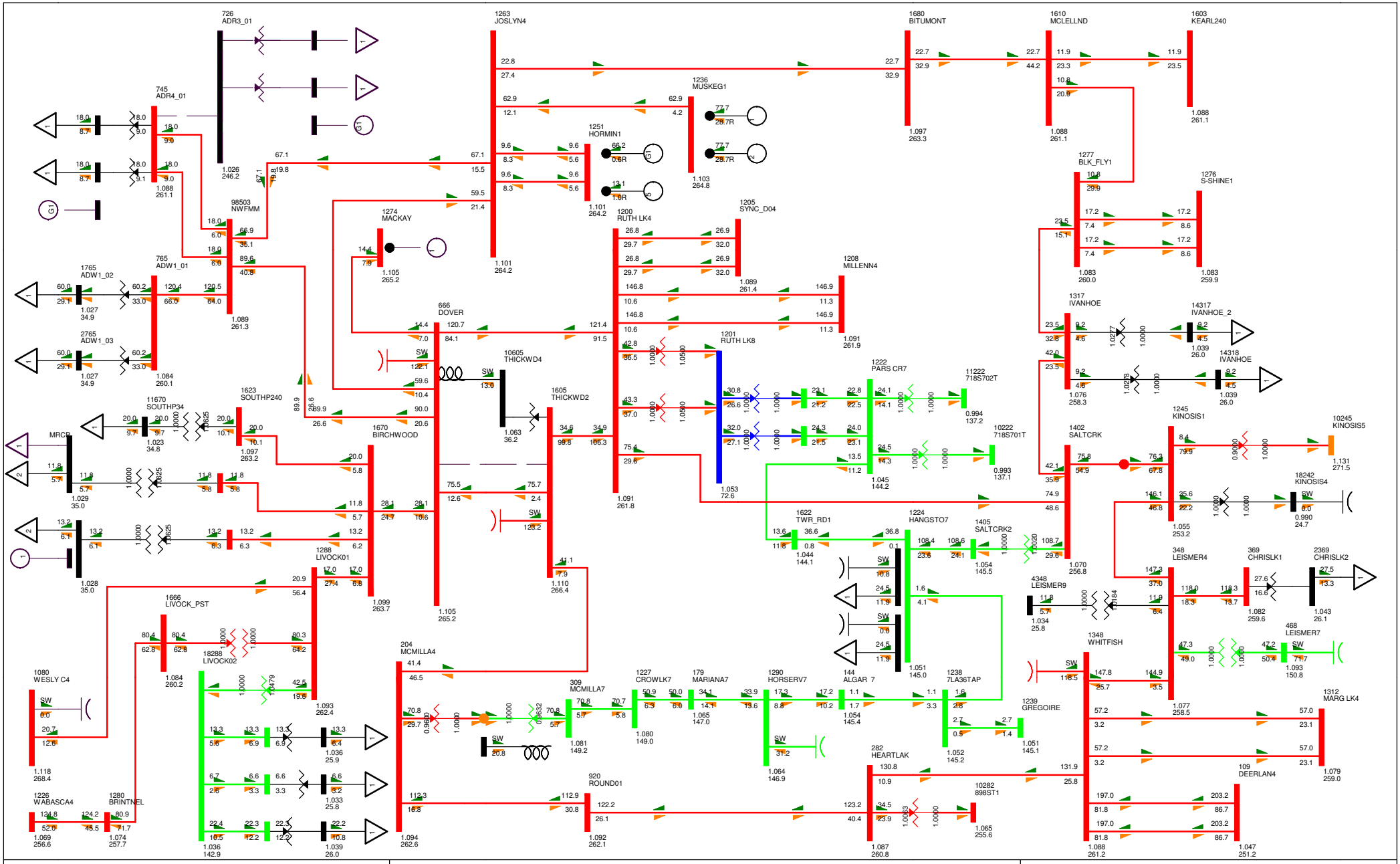
726 ADR3_01
745 ADR4_01
1263 JOSLYN4
1680 BITUMONT
1610 MCLELLND
1603 KEARL240
1236 MUSKEG1
1251 HORMIN1
1277 BLK_FLY1
1276 S-SHINE1
98503 NWFMM
1274 MACKAY
1200 RUTH LK4
1205 SYNC_D04
1765 ADW1_02
765 ADW1_01
2765 ADW1_03
1208 MILLENN4
1317 IVANHOE
14317 IVANHOE_2
14318 IVANHOE
666 DOVER
1201 RUTH LK8
1222 PARS CR7
11222 718S702T
10222 718S701T
1623 SOUTHP240
11670 SOUTHP34
10605 THICKWD4
1605 THICKWD2
1670 BIRCHWOOD
MRCB
1402 SALTCRK
1245 KINOSIS1
10245 KINOSIS5
18242 KINOSIS4
1622 TWR_RD1
1224 HANGSTO7
1405 SALTCRK2
4348 LEISMER9
348 LEISMER4
369 CHRISLK1
2369 CHRISLK2
468 LEISMER7
1348 WHITFISH
1312 MARG LK4
1239 GREGOIRE
109 DEERLAN4
1288 LIVOCK01
1666 LIVOCK_PST
18288 LIVOCK02
204 MCMILLA4
309 MCMILLA7
1227 CROWLK7
179 MARIANA7
1290 HORSERV7
144 ALGAR 7
1238 7LA36TAP
282 HEARTLAK
920 ROUND01
10282 898ST1
1080 WESLY C4
1226 WABASCA4
1280 BRINTNEL
BC - Alberta (IMPORT)774.2 MW
TASMO MODEL; OUTPUT GENERATED 2010-03-01 14:45:14
SWINGBUS 1520 FOR FC-2009-S-2016-04-30:19:24--1--1-0-0
TUE, JUL 26 2011 14:28
2015 NW FMM STUDY
Figure C-2015WP_EX-21
Bus - VOLTAGE (kV/PU)
Branch - MW/Mvar
Equipment - MW/Mvar
100.0%RATEB
1.120OV 0.950UV
kV: <=34.500 <=69.000 <=138.000 <=240.000 <=500.000 >500.000

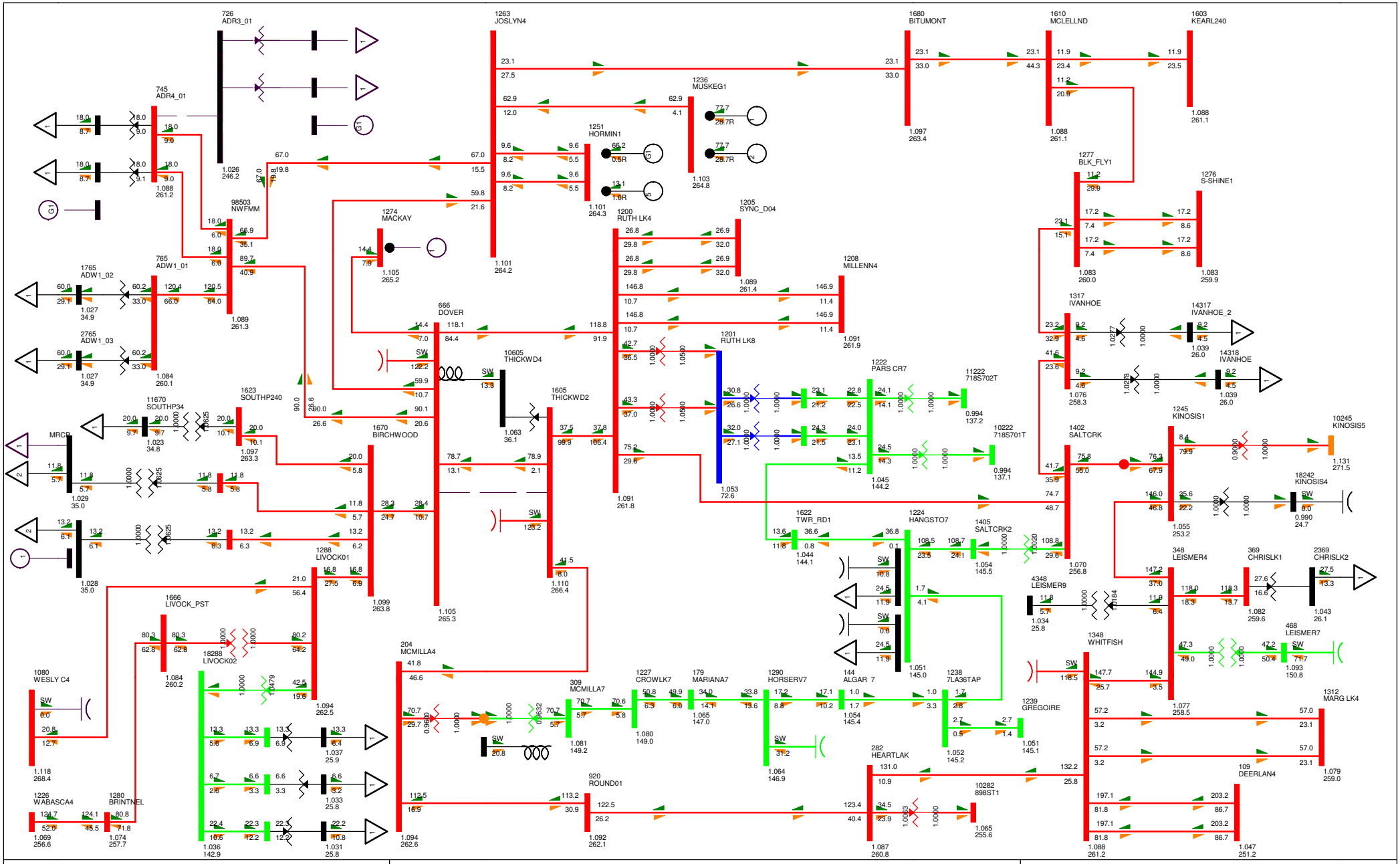
726
ADR3_01
745
ADR4_01
1263
JOSLYN4
1680
BITUMONT
1610
MCLELLND
1603
KEARL240
1236
MUSKEG1
1251
HORMIN1
1277
BLK_FLY1
1276
S-SHINE1
98503
NWFMM
1274
MACKAY
1200
RUTH LK4
1205
SYNC_D04
1765
ADW1_02
765
ADW1_01
2765
ADW1_03
666
DOVER
1208
MILLENN4
1317
IVANHOE
14317
IVANHOE_2
14318
IVANHOE
1201
RUTH LK8
1222
PARS CR7
11222
718S702T
10222
718S701T
10605
THICKWD4
1605
THICKWD2
1623
SOUTHP240
11670
SOUTHP34
MRCB
1670
BIRCHWOOD
1622
TWR_RD1
1224
HANGSTO7
1405
SALTCRK2
1402
SALTCRK
1245
KINOSIS1
10245
KINOSIS5
18242
KINOSIS4
1288
LIVOCK01
1666
LIVOCK_PST
18288
LIVOCK02
204
MCMILLA4
309
MCMILLA7
1227
CROWLK7
179
MARIANA7
1290
HORSERV7
144
ALGAR 7
1238
7LA36TAP
1239
GREGOIRE
4348
LEISMER9
348
LEISMER4
369
CHRISLK1
2369
CHRISLK2
468
LEISMER7
1348
WHITFISH
1312
MARG LK4
109
DEERLAN4
1080
WESLY C4
1226
WABASCA4
1280
BRINTNEL
920
ROUND01
282
HEARTLAK
10282
898ST1
BC - Alberta (IMPORT)774.2 MW
TASMO MODEL; OUTPUT GENERATED 2010-03-01 14:45:14
SWINGBUS 1520 FOR FC-2009-5:2016-04-30:19:24--1--1-0-0
TUE, JUL 26 2011 14:28
2015 NW FMM STUDY
Figure C-2015WP_EX-22
Bus - VOLTAGE (kV/PU)
Branch - MW/Mvar
Equipment - MW/Mvar
100.0%RATEB
1.120OV 0.950UV
kV: <=34.500 <=69.000 <=138.000 <=240.000 <=500.000 >500.000

ATTACHMENT D
Existing System PV Analysis

Table D-1: P-V Analysis Summary – 2013 Summer Peak Existing

Figure Number	System Normal and Category B Contingencies	Forecasted 2013 Summer Peak (MW)	105% Margin (MW)	Nose Point (MW)
Figure D1-2013SP_EX-1	Normal operation condition	1643	1725	2003
Figure D1-2013SP_EX-2	Losing Muskeg River Unit	1643	1725	1903
Figure D1-2013SP_EX-3	240 kV 9L10 Brintnell 876S to Livock 939S	1643	1725	1913
Figure D1-2013SP_EX-4	240 kV 9L57 Livock 939S to Birchwood 960S	1643	1725	1933
Figure D1-2013SP_EX-5	240 kV 9L94 Dover 666S to Birchwood 960S	1643	1725	1933
Figure D1-2013SP_EX-6	240 kV 9L960 Whitefish 825S to DeerLand 13S	1643	1725	1933
Figure D1-2013SP_EX-7	240 kV 971L Conklin 762S to Sunday Creek	1643	1725	1923
	Category C5 Contingencies	**Forecasted 2013 Summer Peak (MW)**	**102.5% Margin (MW)**	**Maximum Operating Limit (MW)**
Figure D1-2013SP_EX-8	9L08 9L09, Dover 888S to Ells River 2079S and Joslyn 849S Double Circuit 240 kV Lines	1643	1684	1953
Figure D1-2013SP_EX-9	9L76 9L09, Joslyn 849S to Ells River 2079S and Dover 888S Double Circuit 240 kV Lines	1643	1684	1953
Figure D1-2013SP_EX-10	9L01 9L58, Dover 888S to Ruth Lake 848S Double Circuit 240 kV Lines	1643	1684	1993

In PV analyses, load in area 25 starts to increase from forecasted peak load. Therefore X-axis represents incremental load from the forecasted peak load.

TASMO MODEL; OUTPUT GENERATED 2010-03-01 14:06:46
SWINGBUS 1520 FOR FC-2009-5:2021-04-30:19:24--1--1-0-0
FRI, AUG 05 2011 14:54

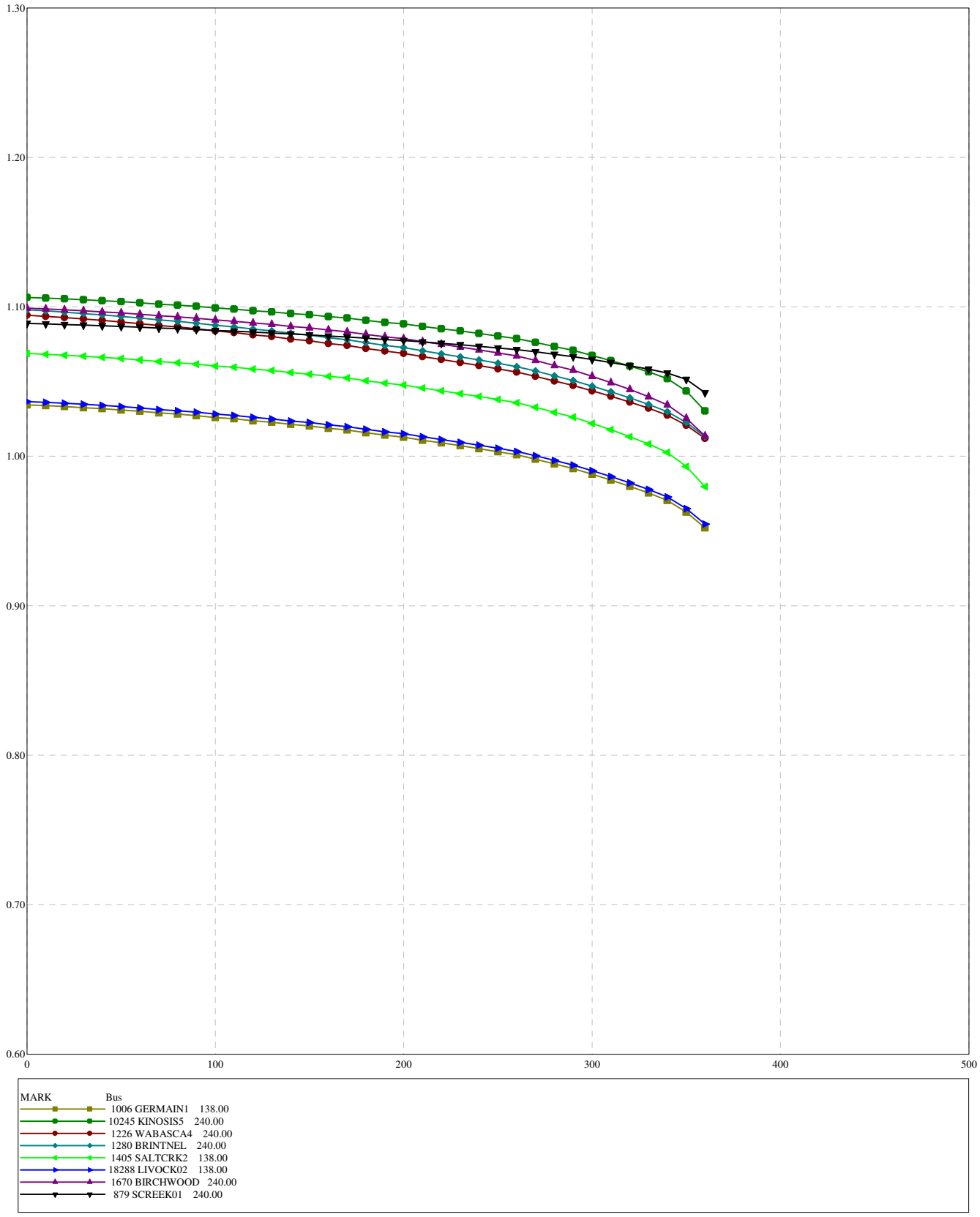

Figure D1-2013SP_EX-1

TASMO MODEL; OUTPUT GENERATED 2010-03-01 14:06:46
SWINGBUS 1520 FOR FC-2009-5:2021-04-30:19:24--1--1-0-0
FRI, AUG 05 2011 14:54

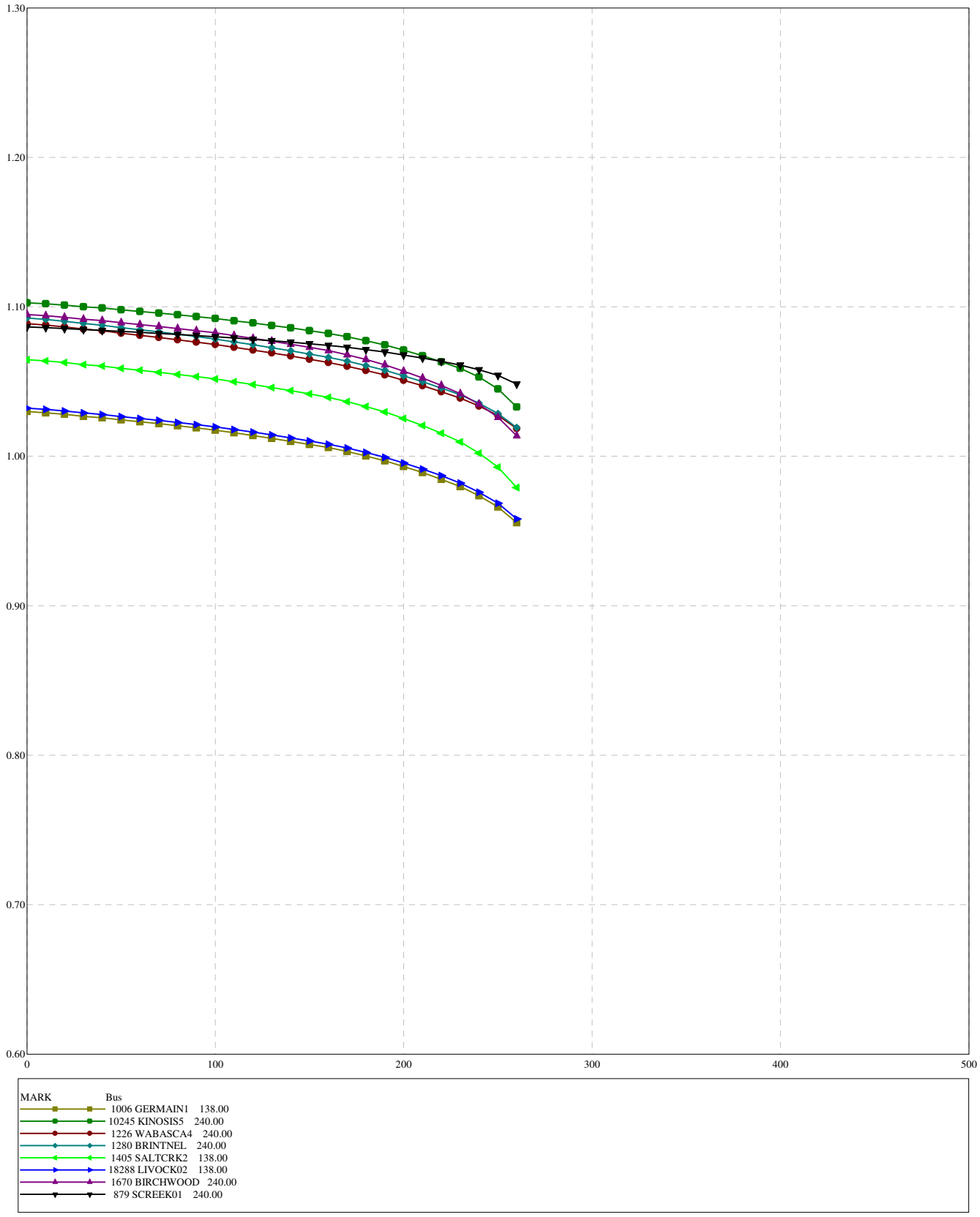

Figure D1-2013SP_EX-2

TASMO MODEL; OUTPUT GENERATED 2010-03-01 14:06:46
SWINGBUS 1520 FOR FC-2009-5:2021-04-30:19:24--1--1-0-0
FRI, AUG 05 2011 15:11

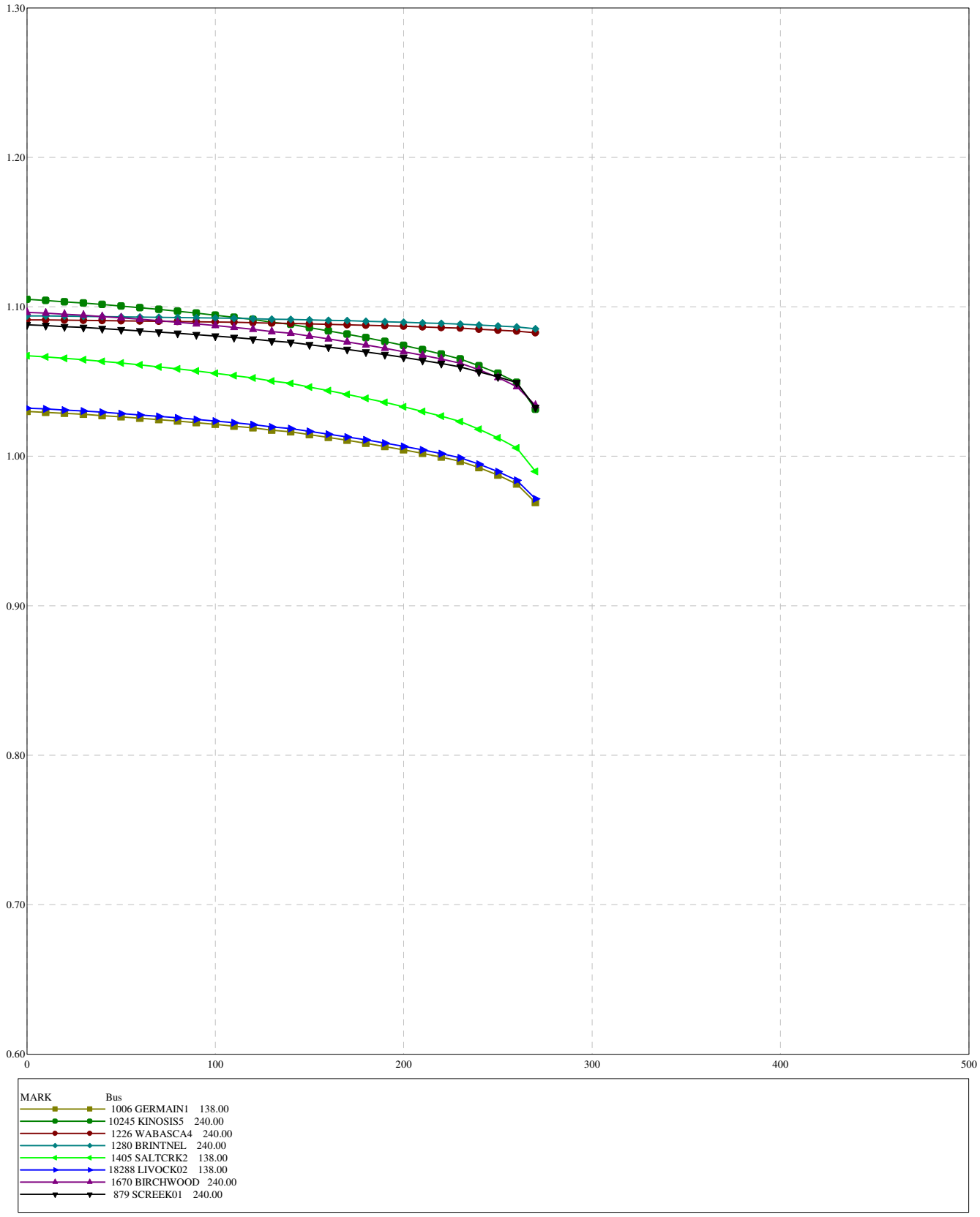

Figure D1-2013SP_EX-3

TASMO MODEL; OUTPUT GENERATED 2010-03-01 14:06:46
SWINGBUS 1520 FOR FC-2009-5:2021-04-30:19:24--1--1-0-0
FRI, AUG 05 2011 14:53

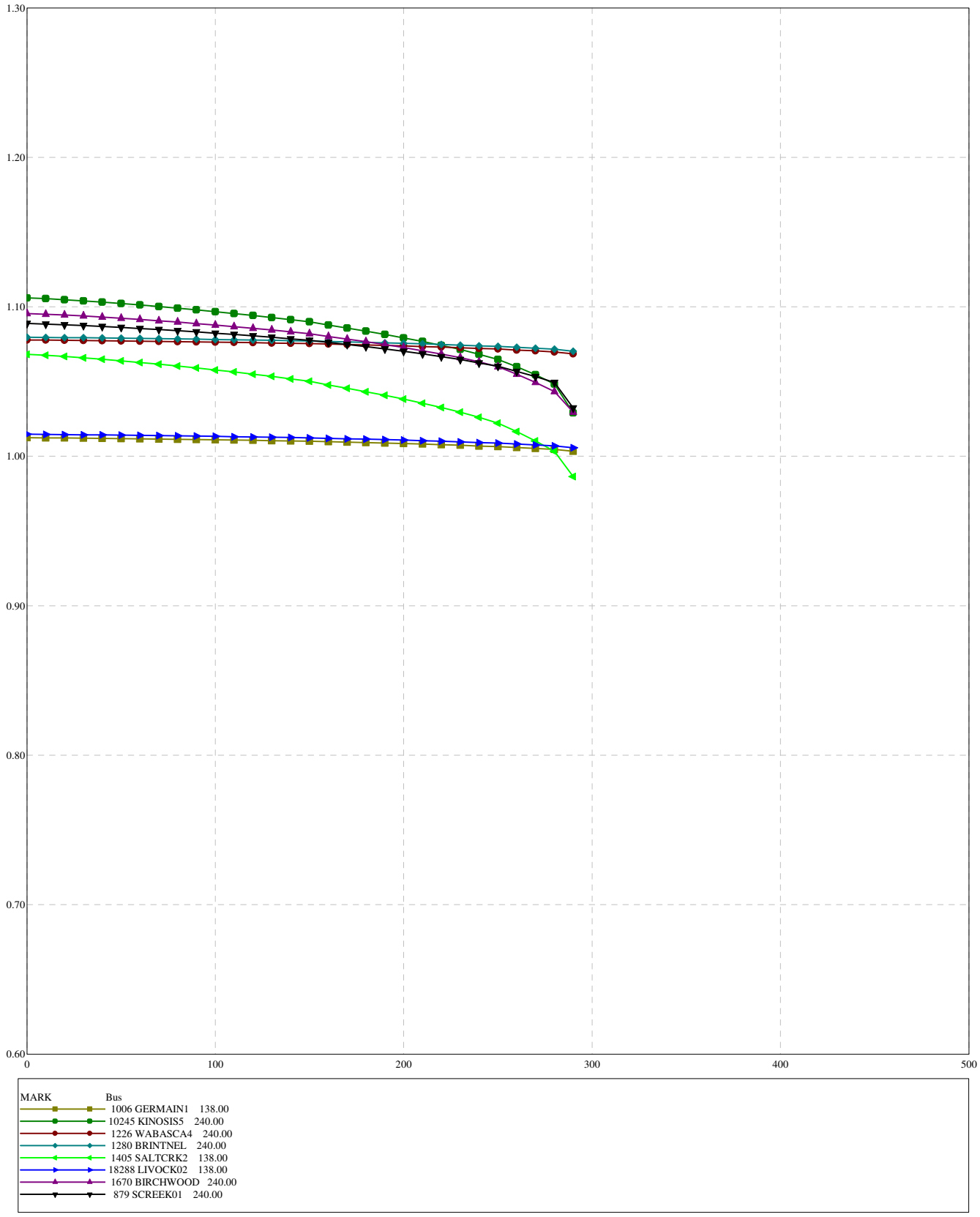

Figure D1-2013SP_EX-4

TASMO MODEL; OUTPUT GENERATED 2010-03-01 14:06:46
SWINGBUS 1520 FOR FC-2009-5:2021-04-30:19:24--1--1-0-0
FRI, AUG 05 2011 14:52

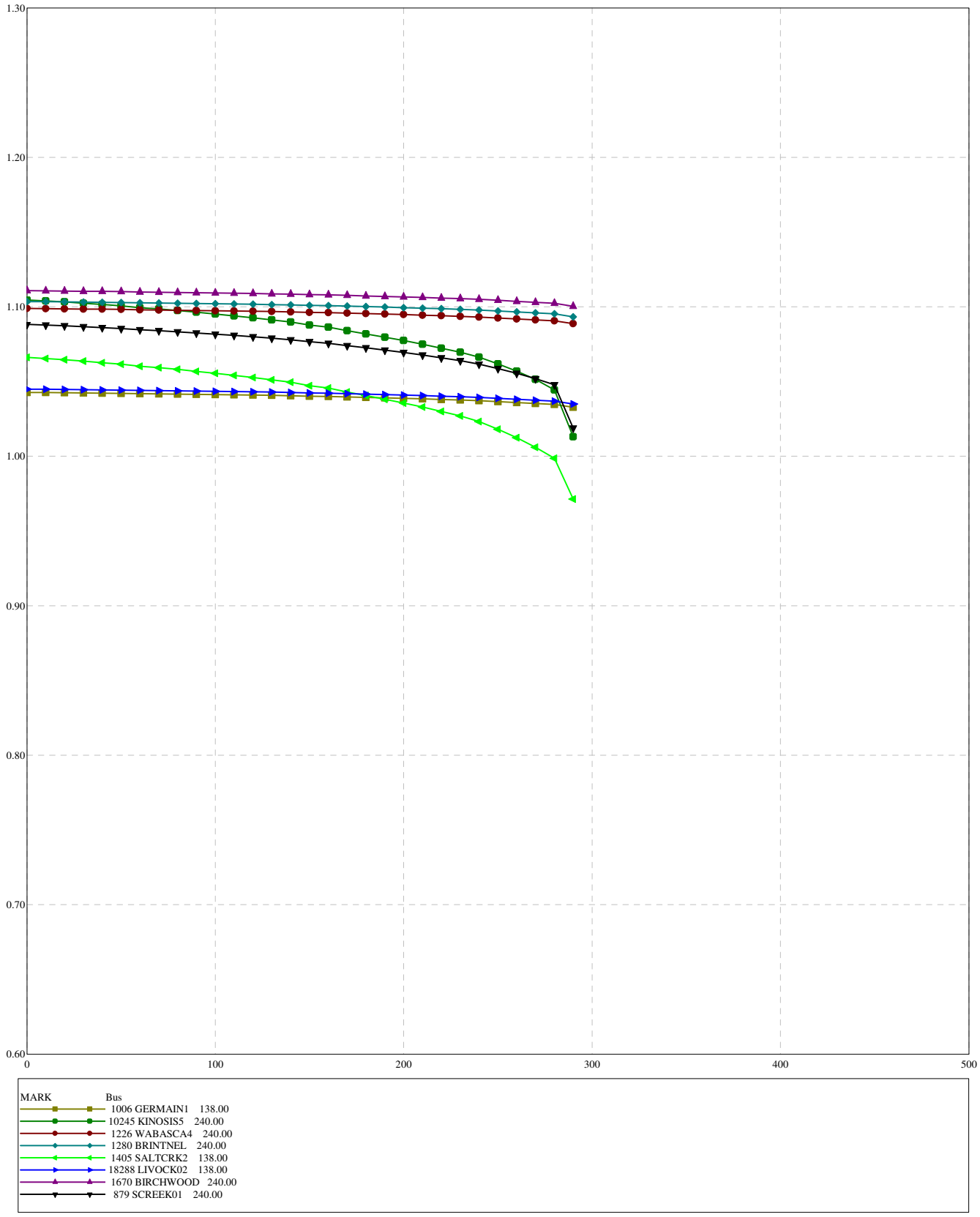

Figure D1-2013SP_EX-5

TASMO MODEL; OUTPUT GENERATED 2010-03-01 14:06:46
SWINGBUS 1520 FOR FC-2009-5:2021-04-30:19:24--1--1-0-0
FRI, AUG 05 2011 14:53

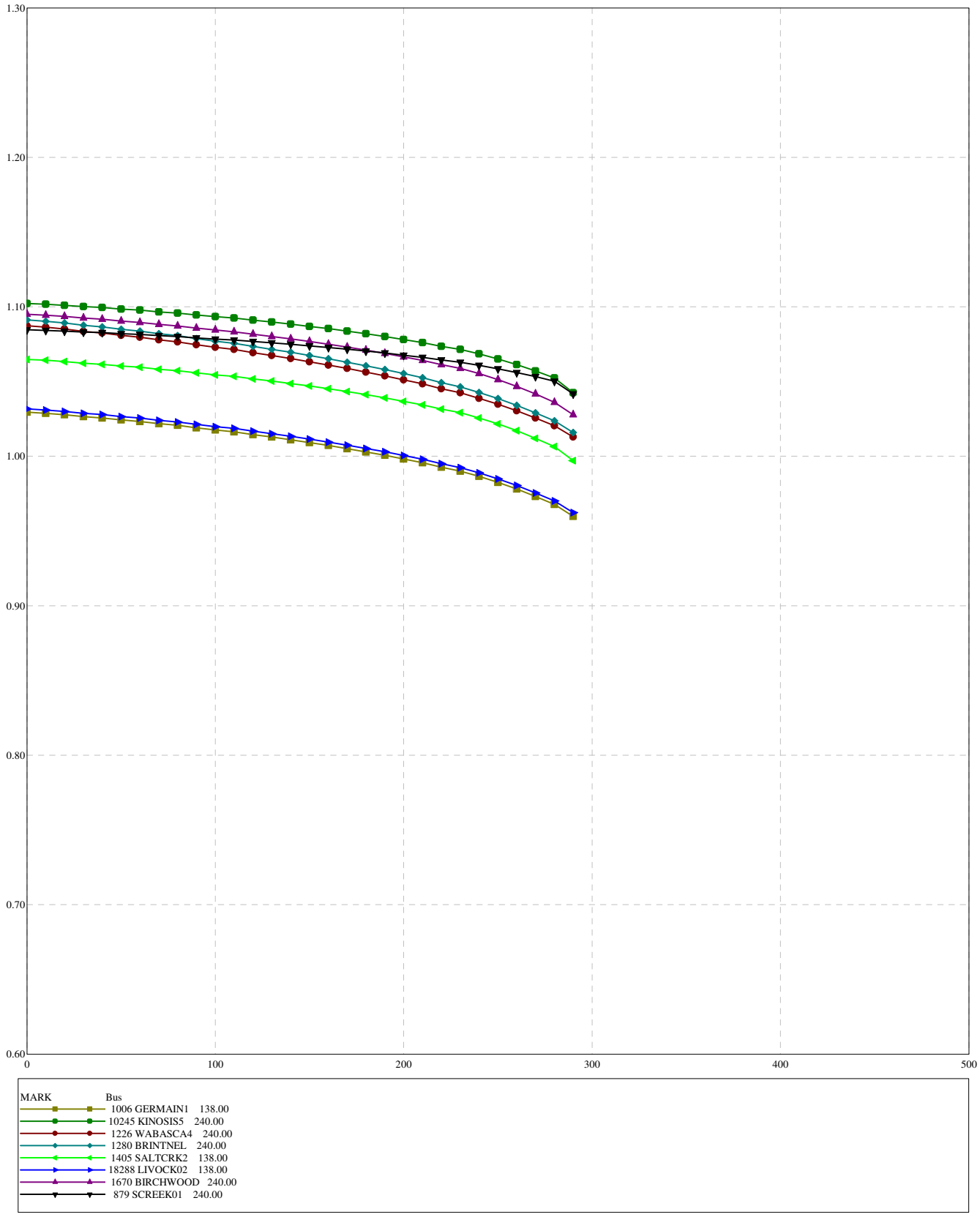

Figure D1-2013SP_EX-6

TASMO MODEL; OUTPUT GENERATED 2010-03-01 14:06:46
SWINGBUS 1520 FOR FC-2009-5:2021-04-30:19:24--1--1-0-0
FRI, AUG 05 2011 14:52

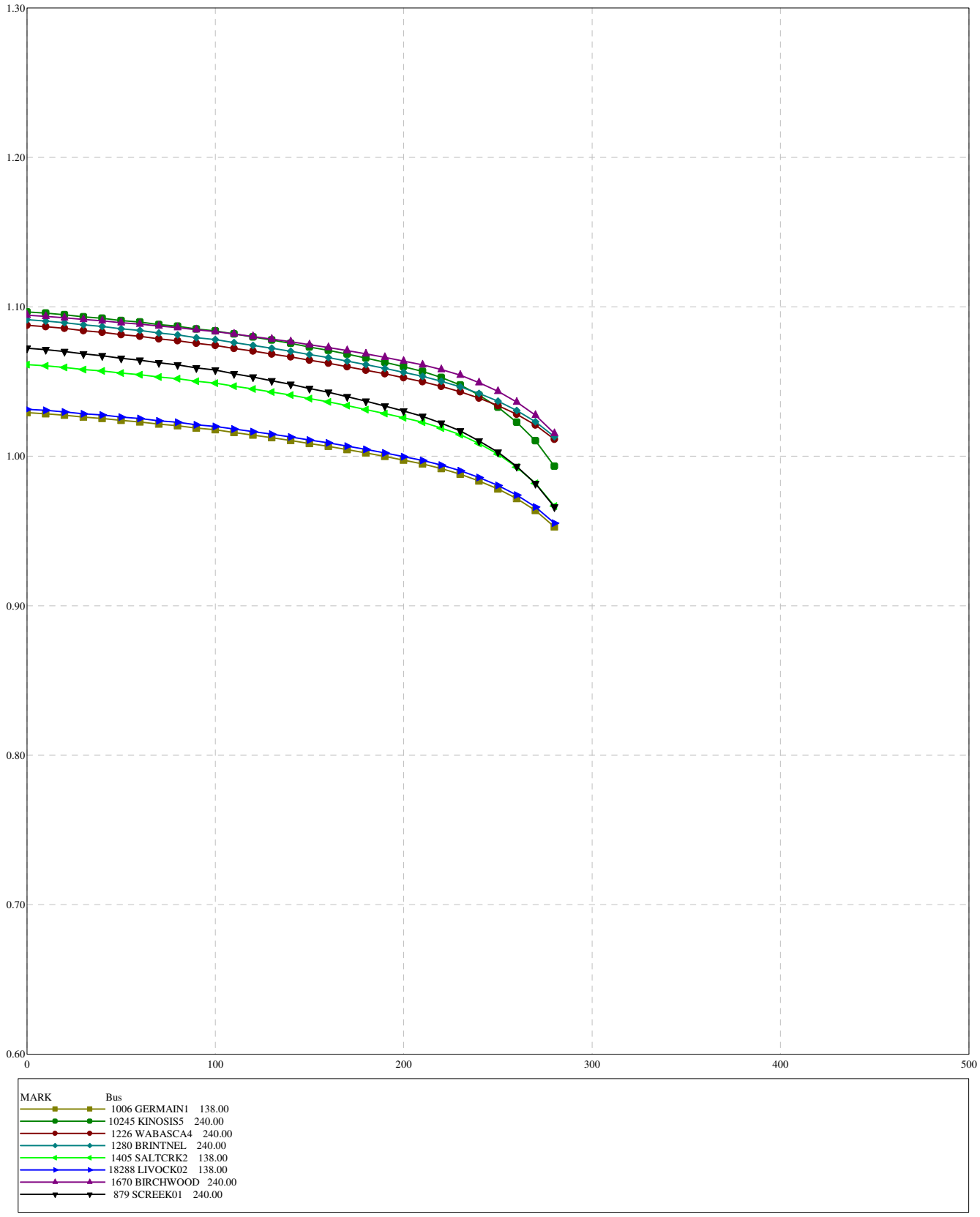

Figure D1-2013SP_EX-7

TASMO MODEL; OUTPUT GENERATED 2010-03-01 14:06:46
SWINGBUS 1520 FOR FC-2009-5:2021-04-30:19:24--1--1-0-0
FRI, AUG 05 2011 14:55

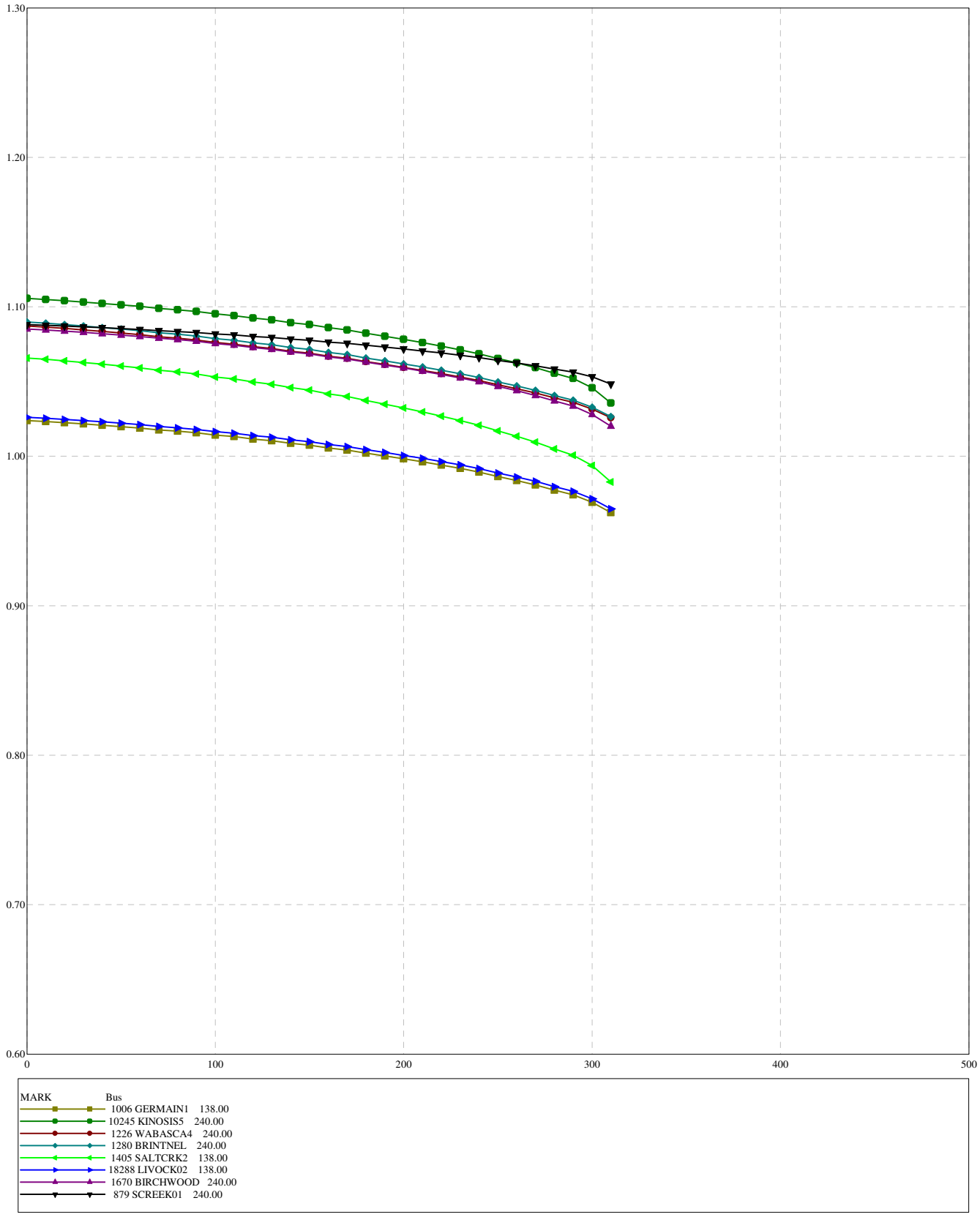

Figure D1-2013SP_EX-8

TASMO MODEL; OUTPUT GENERATED 2010-03-01 14:06:46
SWINGBUS 1520 FOR FC-2009-5:2021-04-30:19:24--1--1-0-0
FRI, AUG 05 2011 14:55

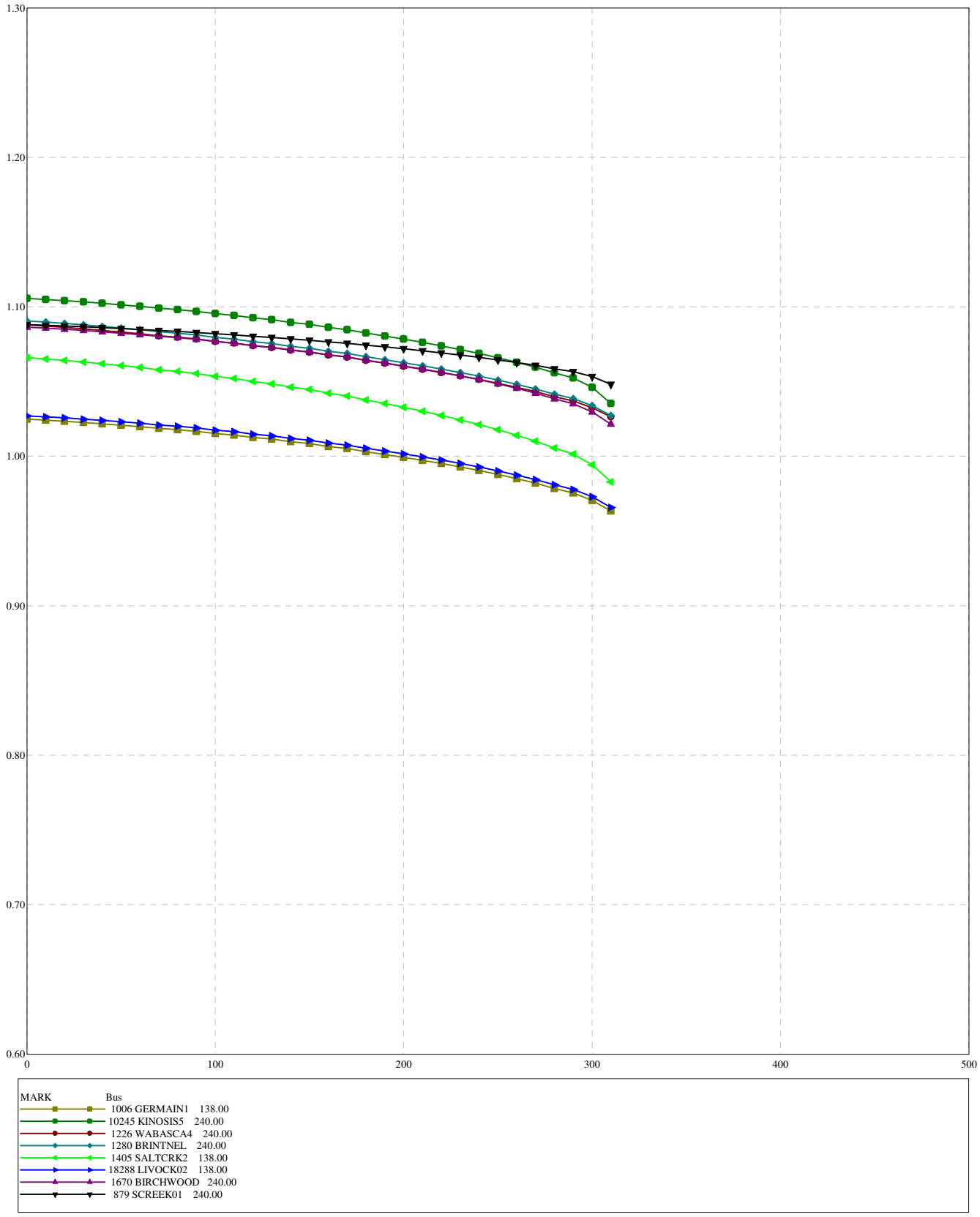

Figure D1-2013SP_EX-9

TASMO MODEL; OUTPUT GENERATED 2010-03-01 14:06:46
SWINGBUS 1520 FOR FC-2009-5:2021-04-30:19:24--1--1-0-0
FRI, AUG 05 2011 14:54

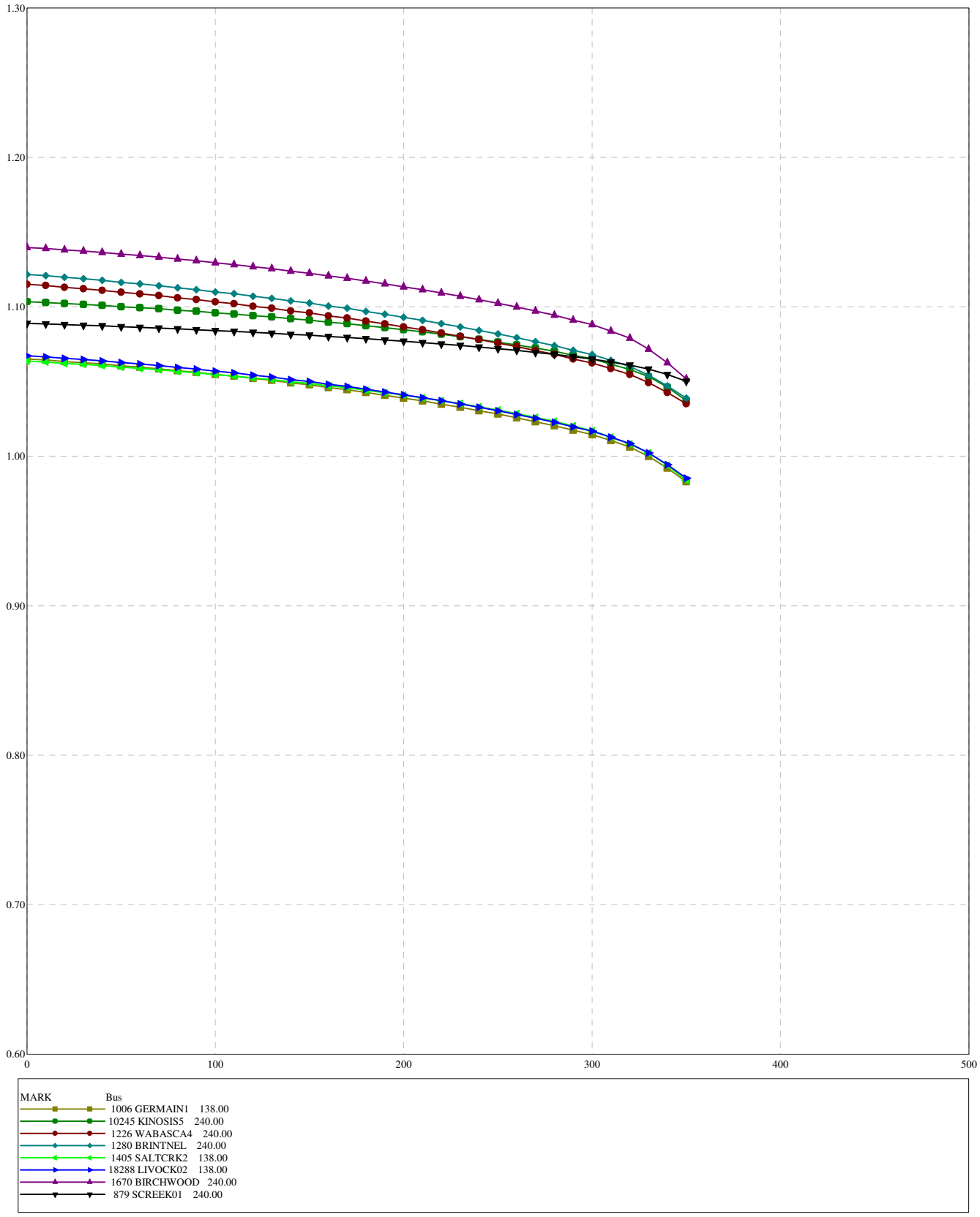

Figure D1-2013SP_EX-10

Table D-2: P-V Analysis Summary – 2013 Winter Peak Existing

Figure Number	System Normal and Category B Contingencies	Forecasted 2013 Winter Peak (MW)	105% Margin (MW)	Nose Point (MW)
Figure D2-2013WP_EX-1	Normal operation condition	1811	1902	2061
Figure D2-2013WP_EX-2	240 kV 9L10 Brintnell 876S to Livock 939S	1811	1902	1921
Figure D2-2013WP_EX-3	240 kV 9L57 Livock 939S to Birchwood 960S	1811	1902	1951
Figure D2-2013WP_EX-4	240 kV 9L94 Dover 666S to Birchwood 960S	1811	1902	1941
Figure D2-2013WP_EX-5	240 kV 9L960 Whitefish 825S to DeerLand 13S	1811	1902	1941
Figure D2-2013WP_EX-6	240 kV 971L Conklin 762S to Sunday Creek	1811	1902	1961
	Category C5 Contingencies	**Forecasted 2013 Winter Peak (MW)**	**102.5% Margin (MW)**	**Maximum Operating Limit (MW)**
Figure D2-2013WP_EX-7	9L08 9L09, Dover 888S to Ells River 2079S and Joslyn 849S Double Circuit 240 kV Lines	1811	1856	2021
Figure D2-2013WP_EX-8	9L76 9L09, Joslyn 849S to Ells River 2079S and Dover 888S Double Circuit 240 kV Lines	1811	1856	2021
Figure D2-2013WP_EX-9	9L01 9L58, Dover 888S to Ruth Lake 848S Double Circuit 240 kV Lines	1811	1856	2051

2013 WP EXISTING CASE

FRI, JUN 24 2011 17:33

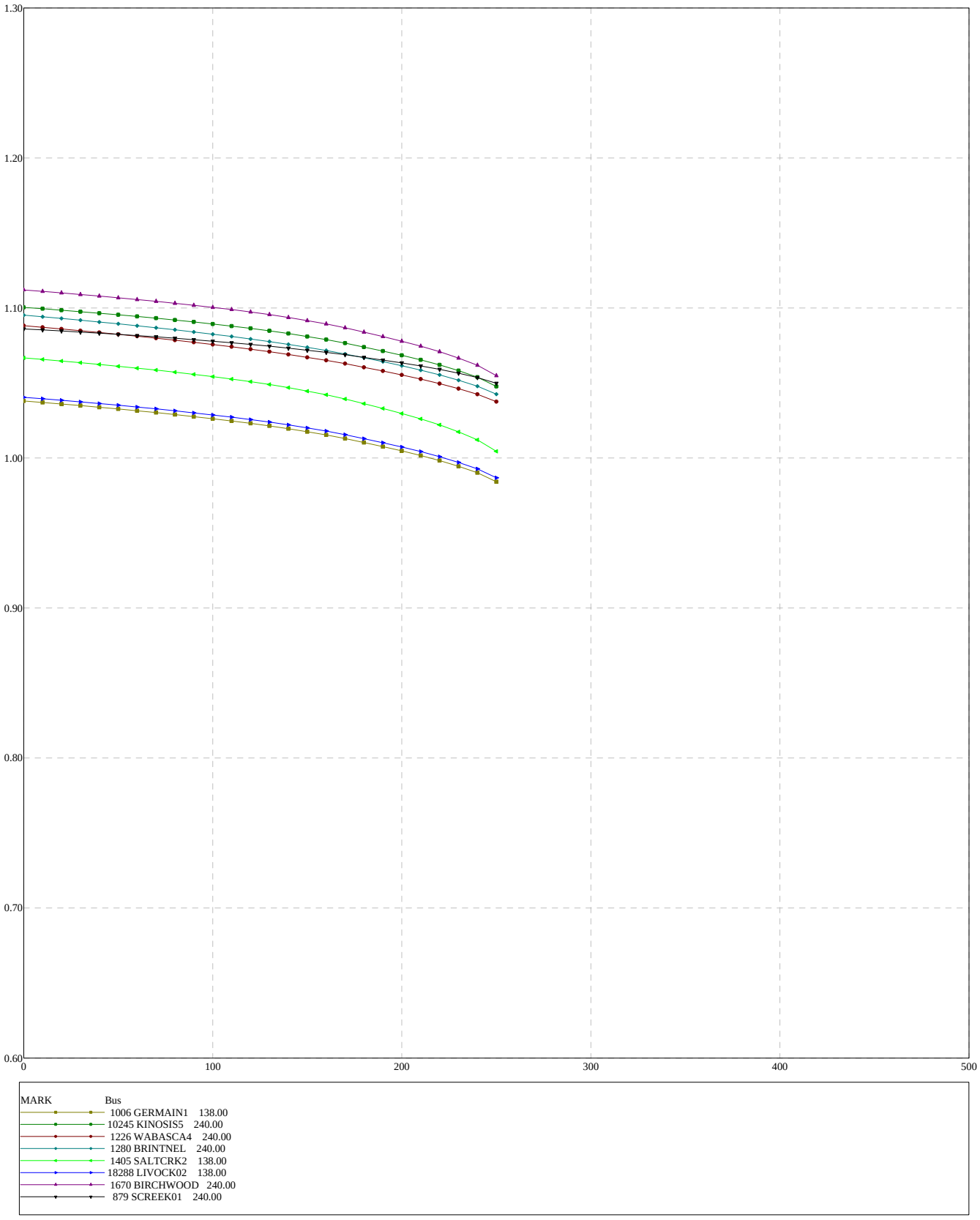

Figure D2-2013WP_EX-1

2013 WP EXISTING CASE

FRI, JUN 24 2011 17:34

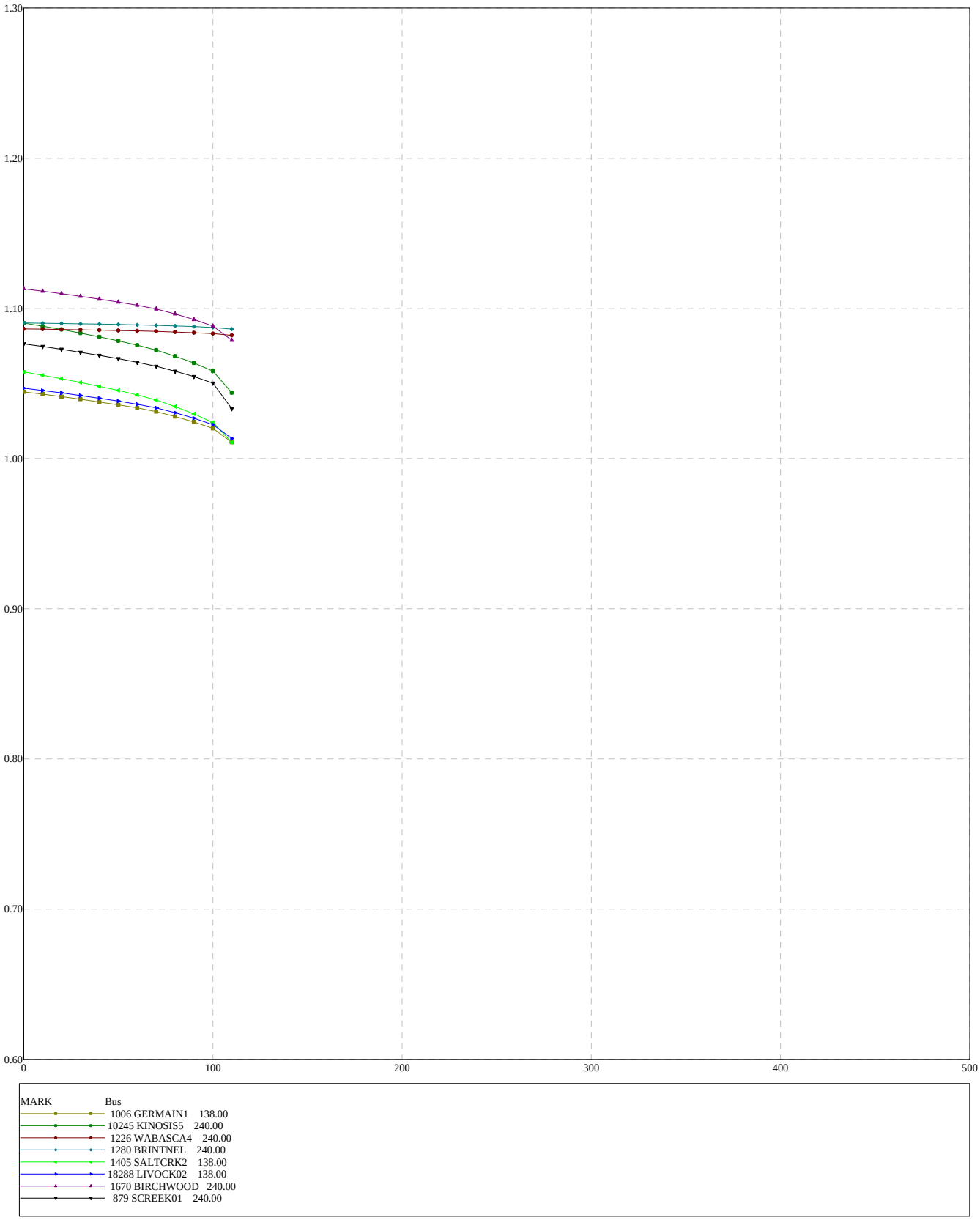

Figure D2-2013WP_EX-2

2013 WP EXISTING CASE

FRI, JUN 24 2011 17:36

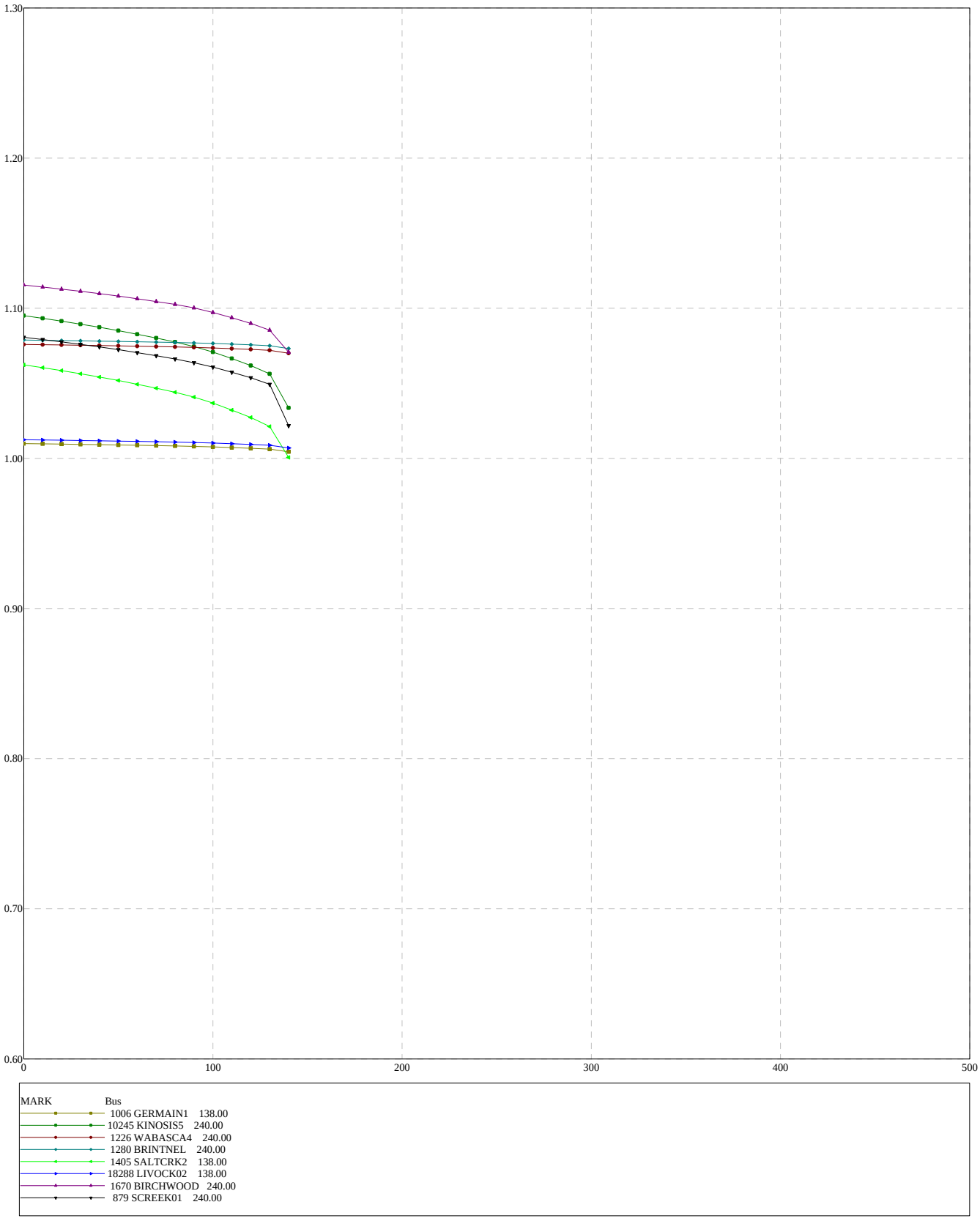

Figure D2-2013WP_EX-3

2013 WP EXISTING CASE

FRI, JUN 24 2011 17:35

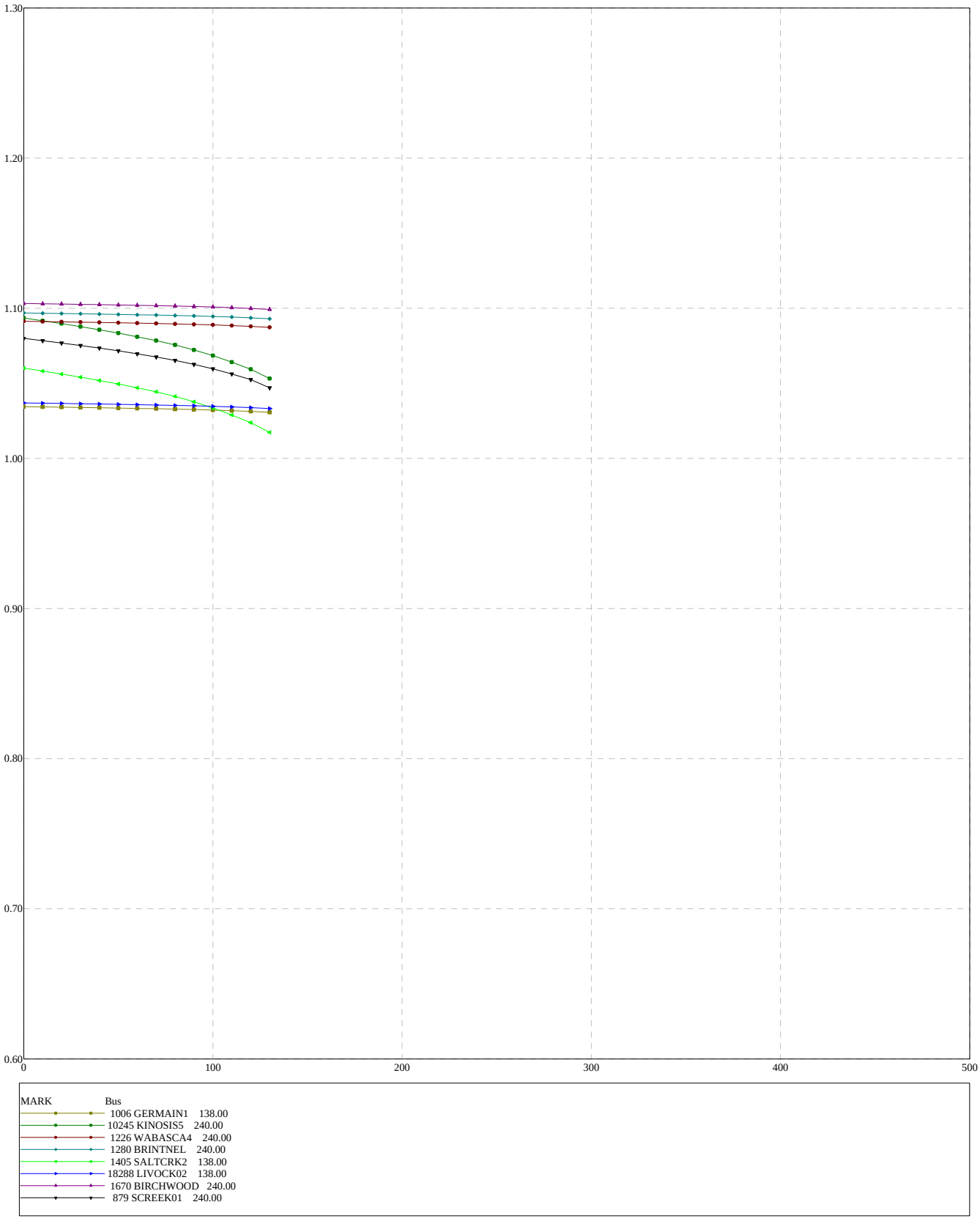

Figure D2-2013WP_EX-4

2013 WP EXISTING CASE

FRI, JUN 24 2011 17:35

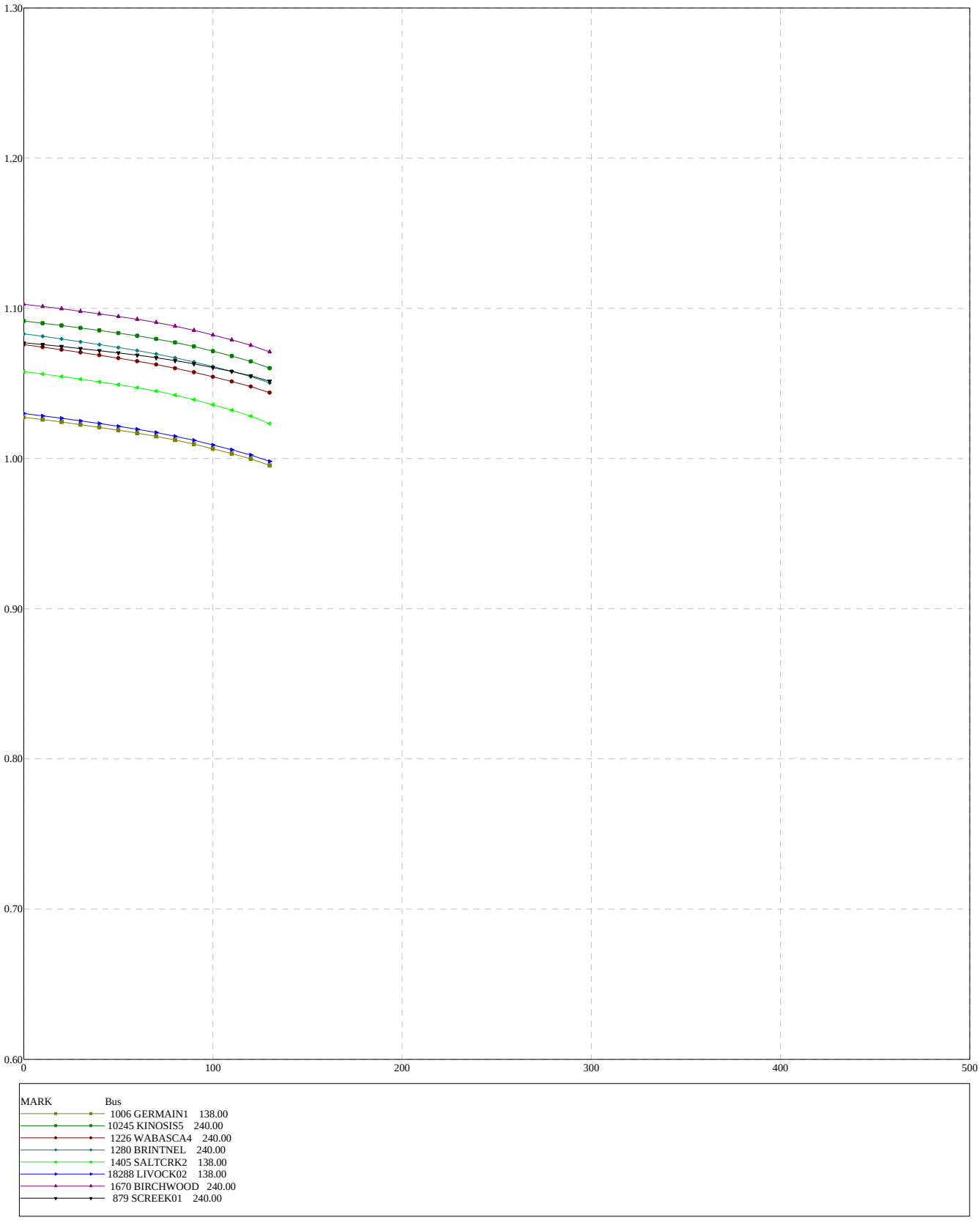

Figure D2-2013WP_EX-5

2013 WP EXISTING CASE

FRI, JUN 24 2011 17:36

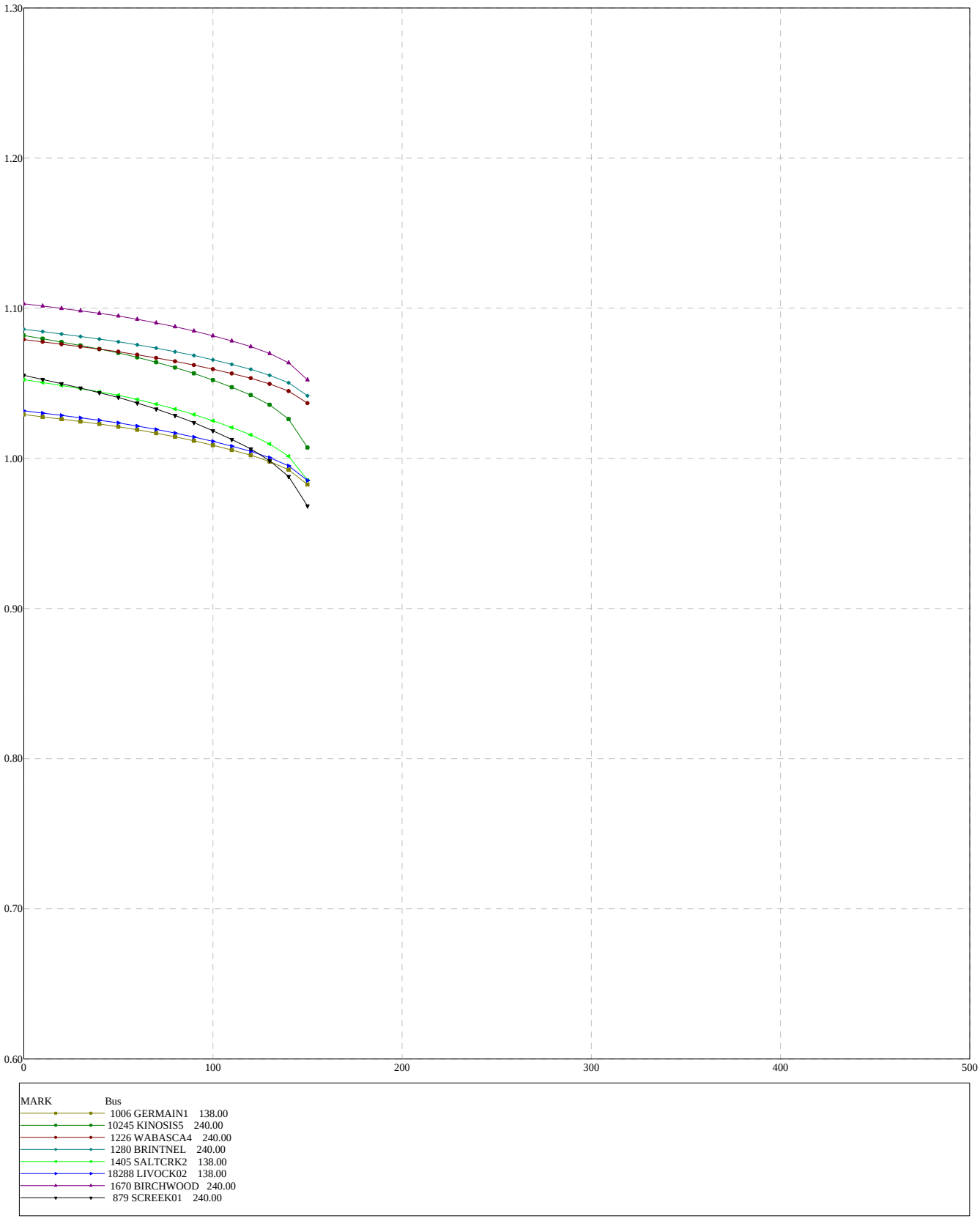

Figure D2-2013WP_EX-6

2013 WP EXISTING CASE

FRI, JUN 24 2011 17:33

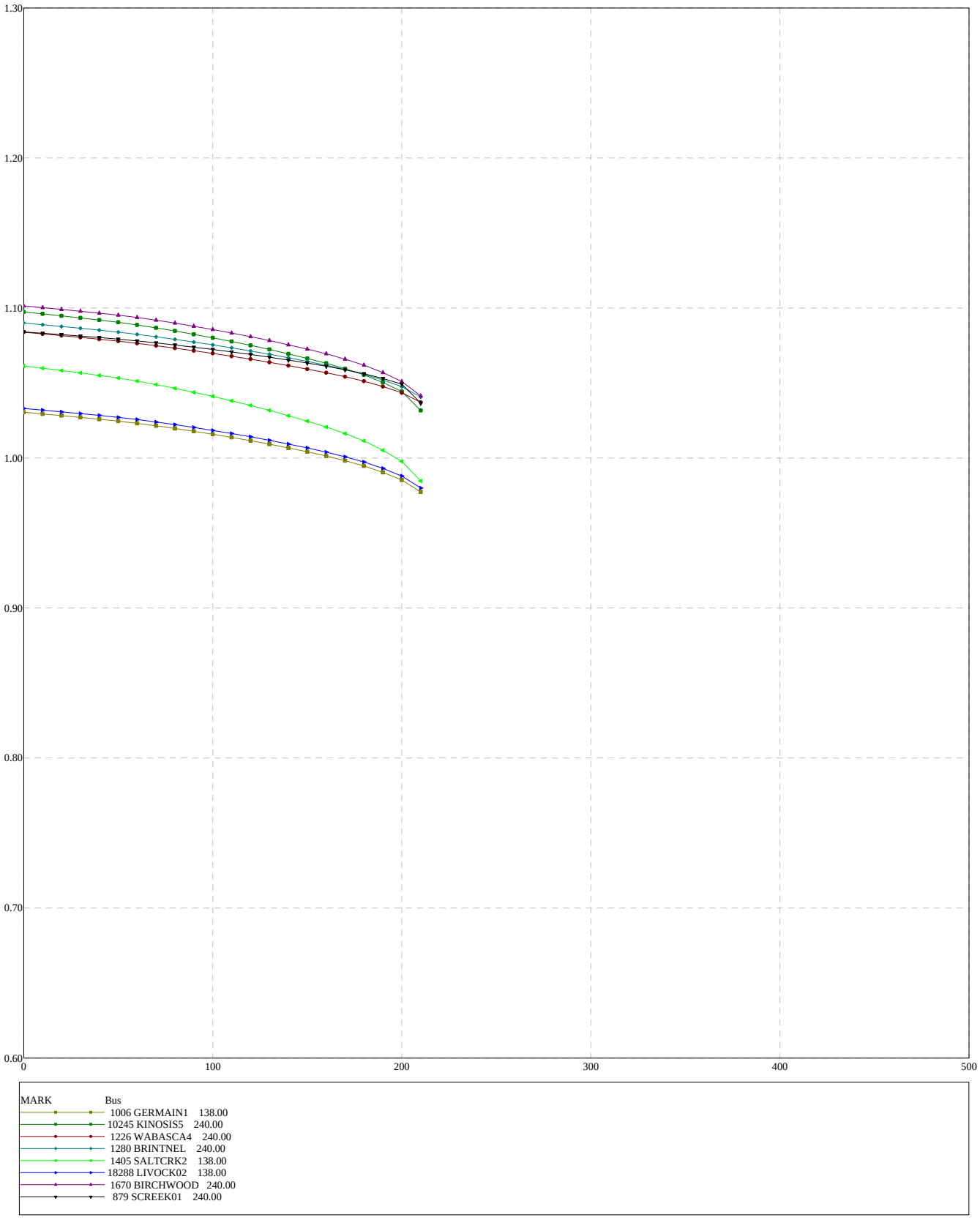

Figure D2-2013WP_EX-7

2013 WP EXISTING CASE

FRI, JUN 24 2011 17:34

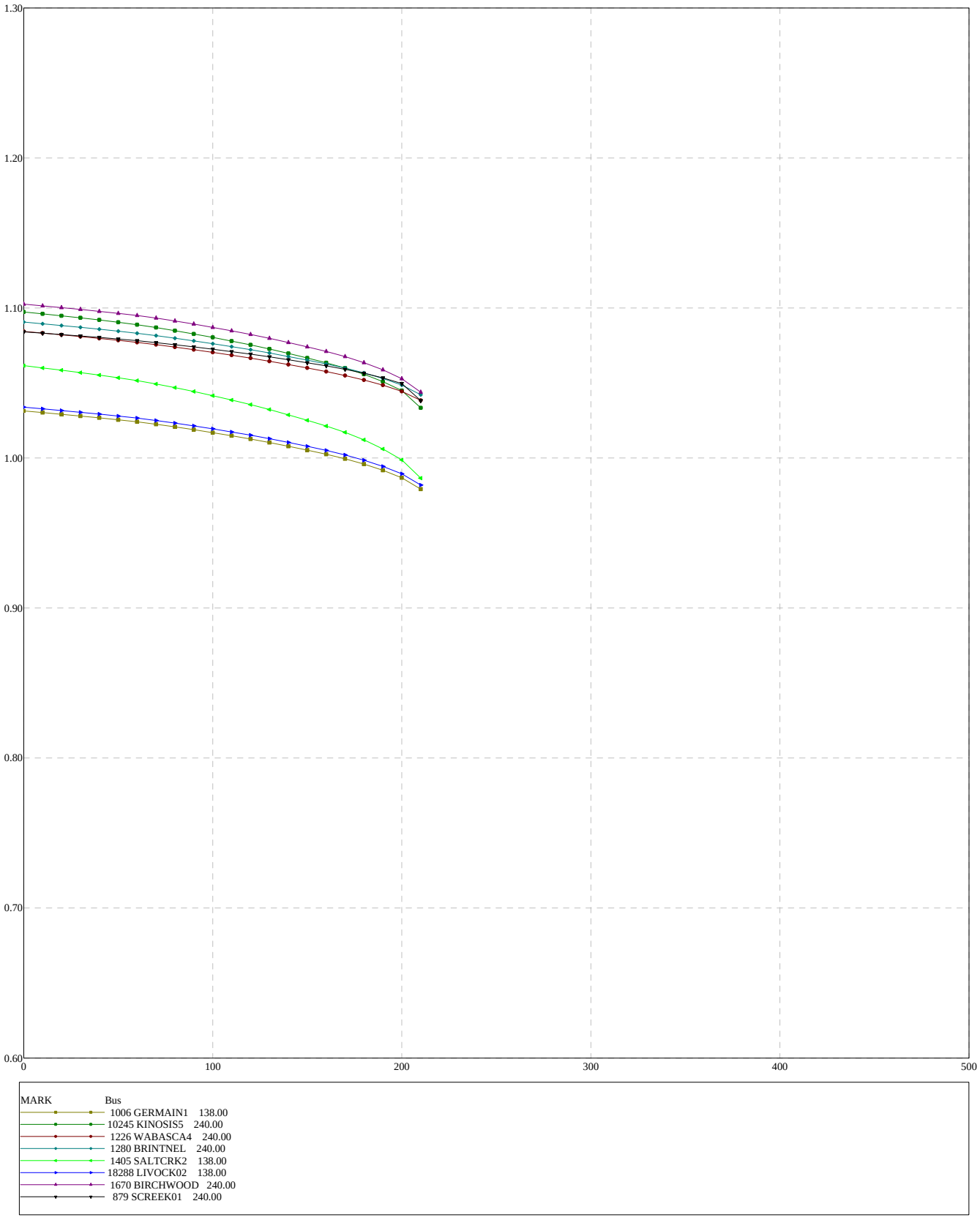

Figure D2-2013WP_EX-8

2013 WP EXISTING CASE

FRI, JUN 24 2011 17:33

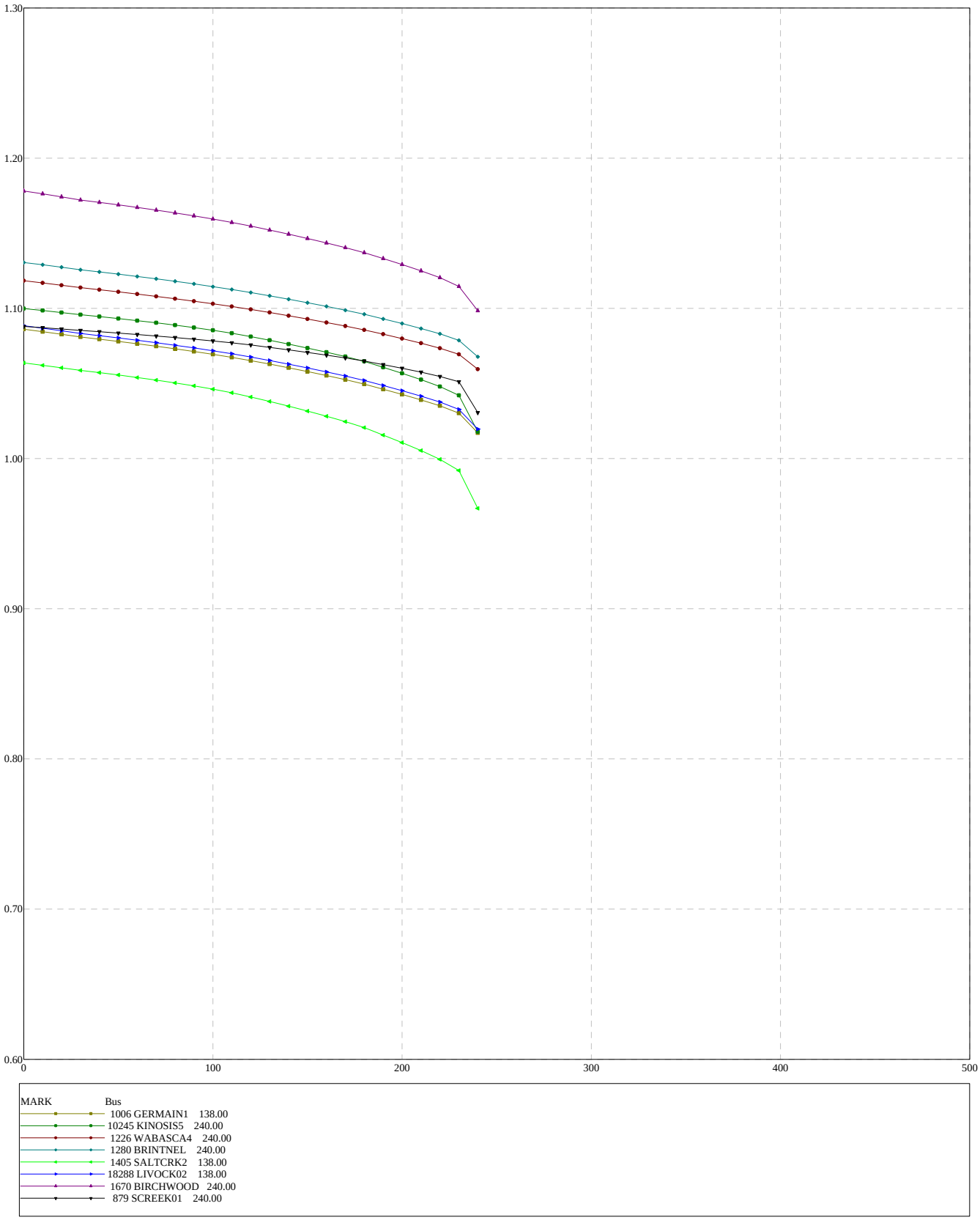

Figure D2-2013WP_EX-9

Table D-3: P-V Analysis Summary – 2015 Summer Peak Existing

Figure Number	System Normal and Category B Contingencies	Forecasted 2015 Summer Peak (MW)	105% Margin (MW)	Nose Point (MW)
Figure D3-2015SP_EX-1	Base Case	1928	2024	2308
Figure D3-2015SP_EX-2	240 kV 971L Conklin 762S to Sunday Creek	1928	2024	2148
Figure D3-2015SP_EX-3	240 kV Kinosis 856S to Leismer 72S	1928	2024	2148
Figure D3-2015SP_EX-4	240 kV 9L930 Whitefish 825S to Leismer 72S	1928	2024	2168
Figure D3-2015SP_EX-5	240 kV 9L74 Dover 888S to Birchwood 960S	1928	2024	2198
Figure D3-2015SP_EX-6	240 kV RoundHill 1049S to Heart Lake 898S	1928	2024	2188
	Category C5 Contingencies	**Forecasted 2015 Summer Peak (MW)**	**102.5% Margin (MW)**	**Maximum Operating Limit (MW)**
Figure D3-2015SP_EX-7	9L08 9L09, Dover 888S to Ells River 2079S and Joslyn 849S Double Circuit 240 kV Lines	1928	1976	2138
Figure D3-2015SP_EX-8	9L76 9L09, Joslyn 849S to Ells River 2079S and Dover 888S Double Circuit 240 kV Lines	1928	1976	2288
Figure D3-2015SP_EX-9	9L01 9L58, Dover 888S to Ruth Lake 848S Double Circuit 240 kV Lines	1928	1976	2298

TASMO MODEL; OUTPUT GENERATED 2010-03-01 14:06:46
SWINGBUS 1520 FOR FC-2009-5:2021-04-30:19:24--1--1-0-0
FRI, AUG 05 2011 15:37

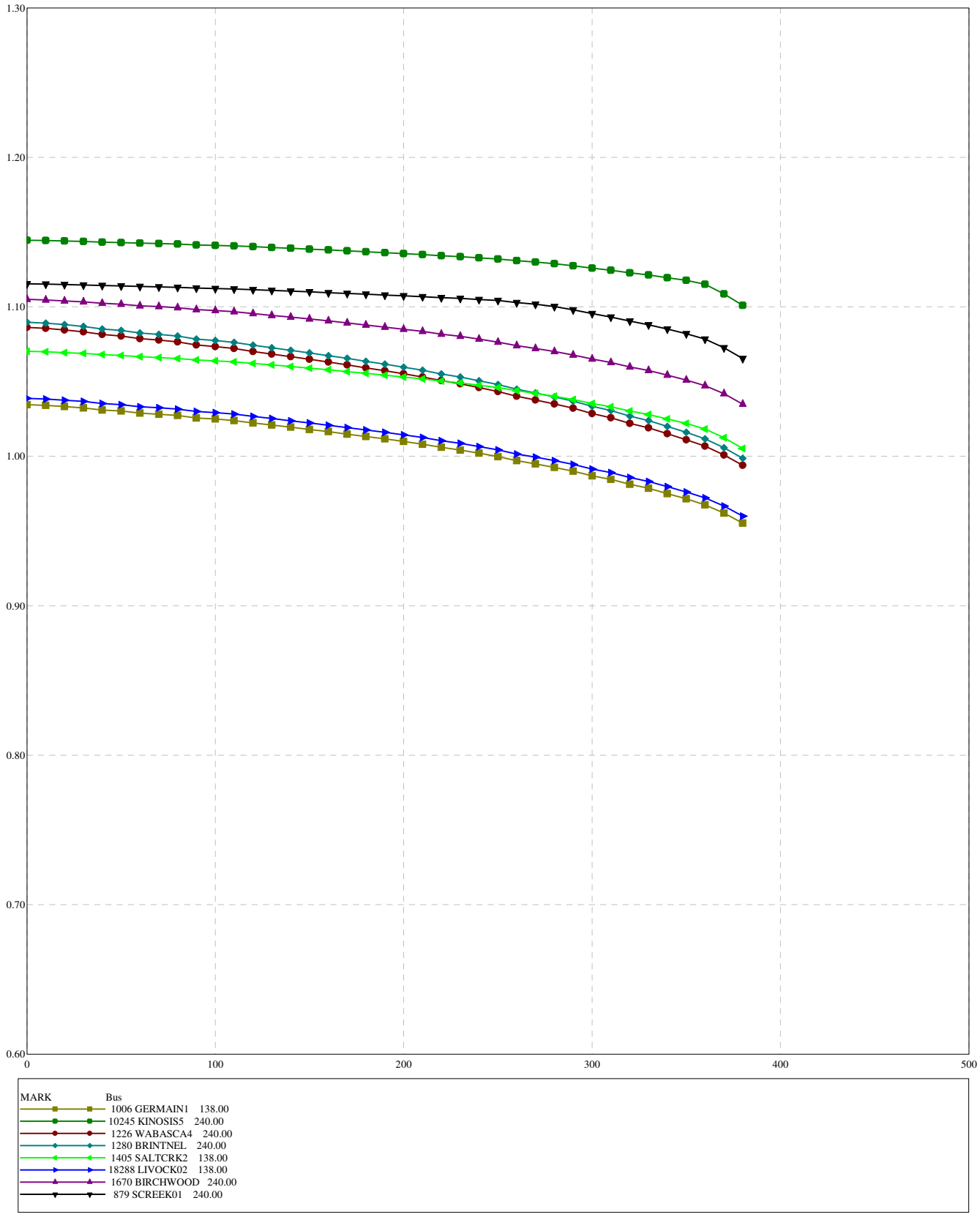

Figure D3-2015SP_EX-1

TASMO MODEL; OUTPUT GENERATED 2010-03-01 14:06:46
SWINGBUS 1520 FOR FC-2009-5:2021-04-30:19:24--1--1-0-0
FRI, AUG 05 2011 15:55

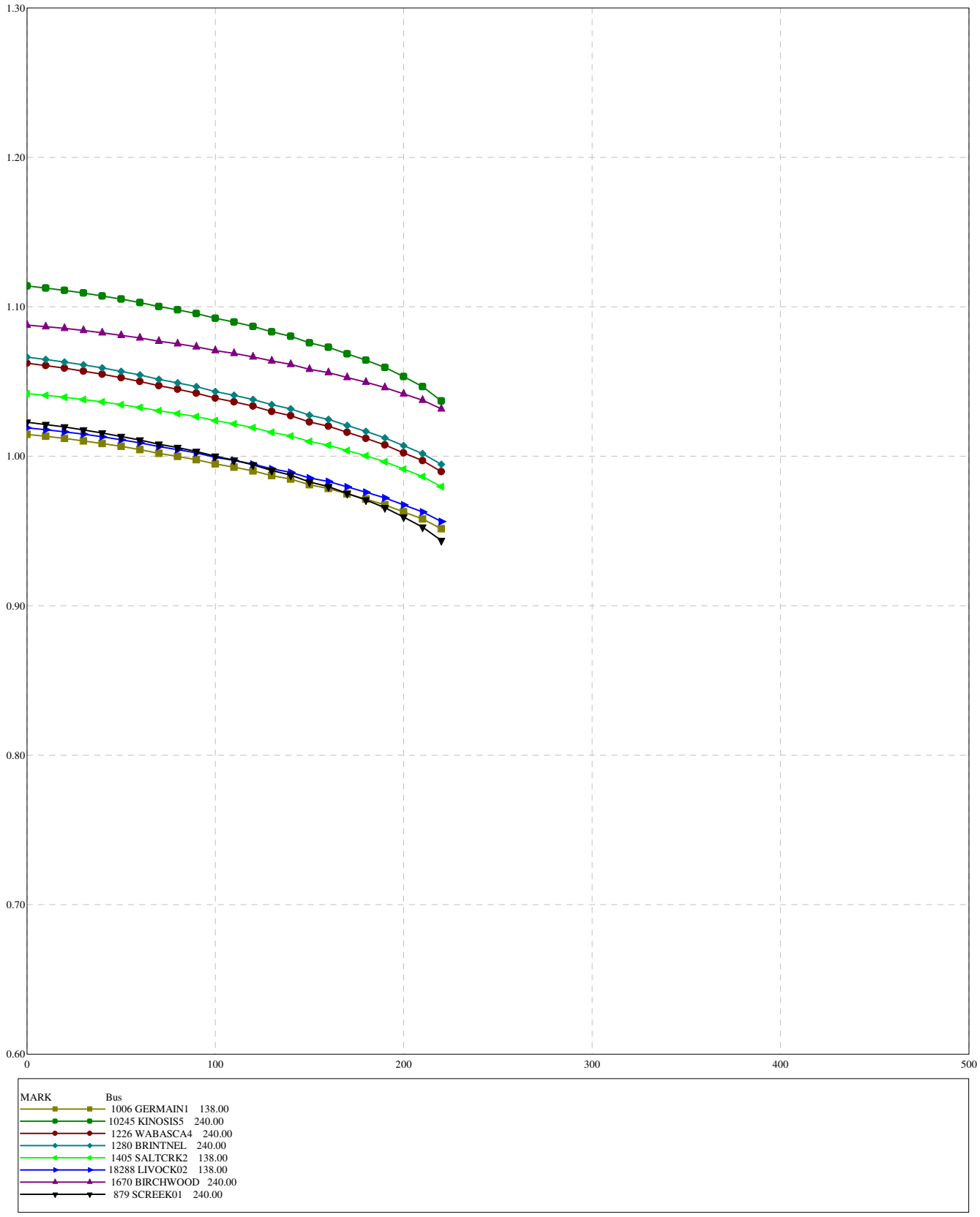

Figure D3-2015SP_EX-2

TASMO MODEL; OUTPUT GENERATED 2010-03-01 14:06:46
SWINGBUS 1520 FOR FC-2009-5:2021-04-30:19:24--1--1-0-0
FRI, AUG 05 2011 15:55

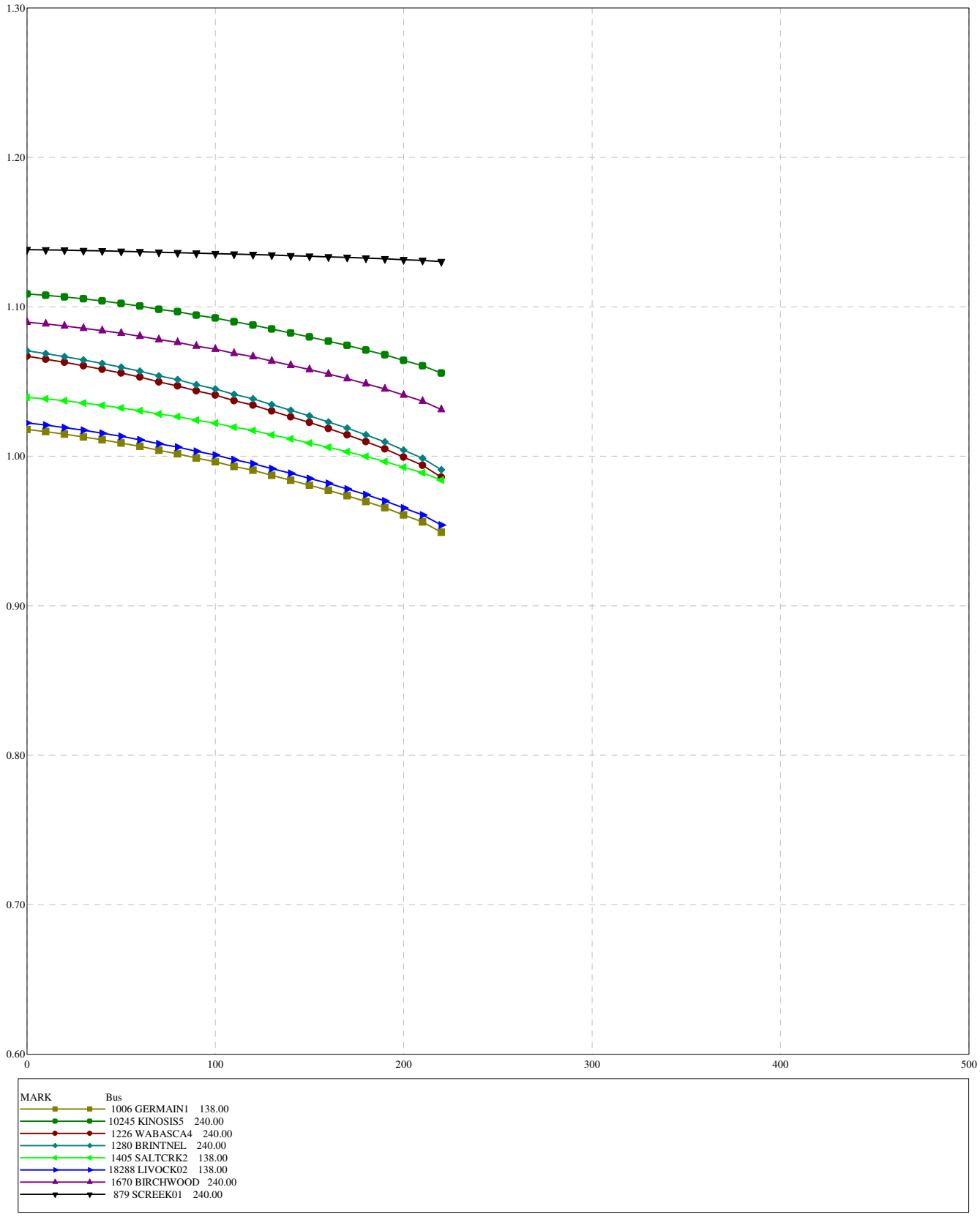

Figure D3-2015SP_EX-3

TASMO MODEL; OUTPUT GENERATED 2010-03-01 14:06:46
SWINGBUS 1520 FOR FC-2009-5:2021-04-30:19:24--1--1-0-0
FRI, AUG 05 2011 15:56

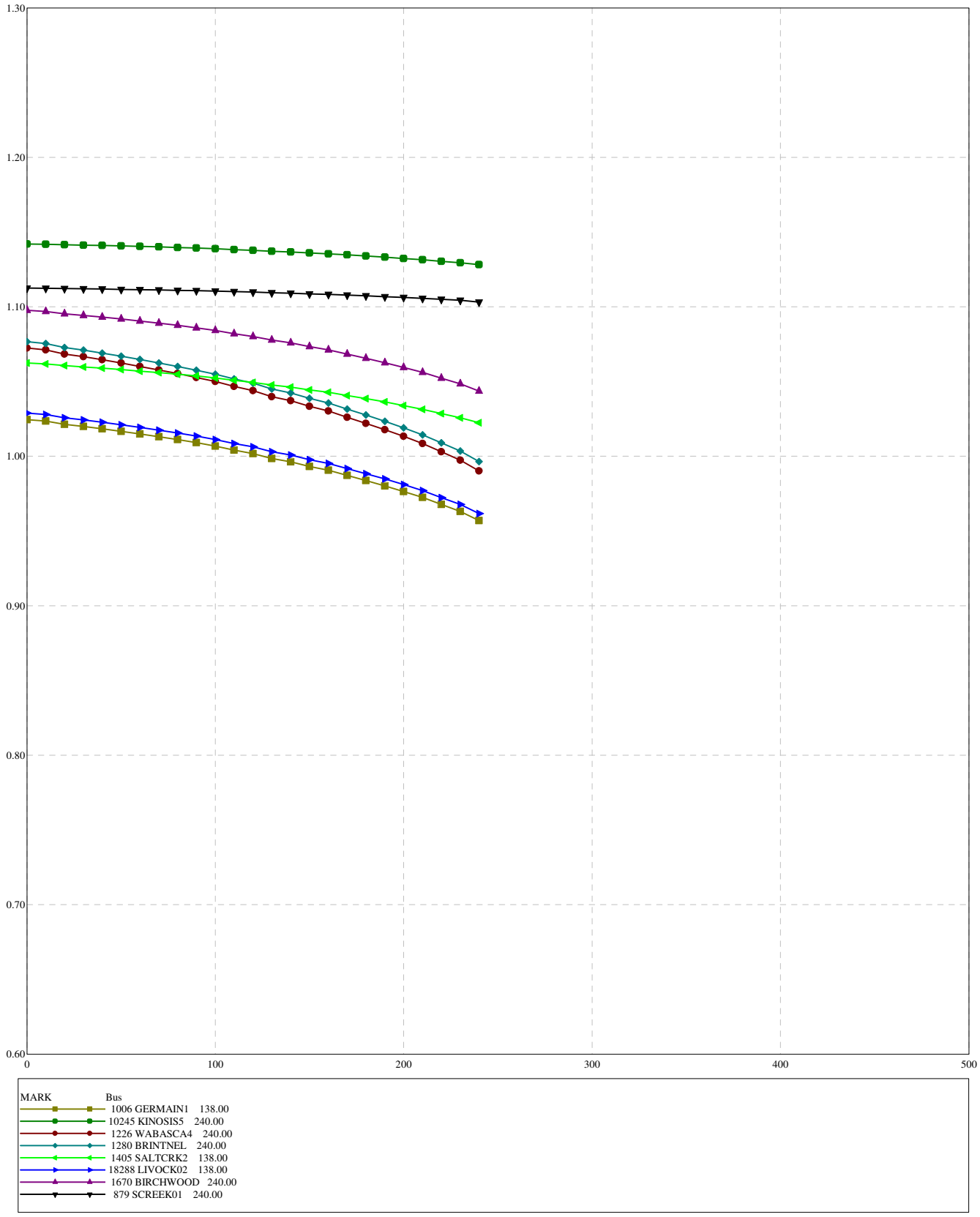

Figure D3-2015SP_EX-4

TASMO MODEL; OUTPUT GENERATED 2010-03-01 14:06:46
SWINGBUS 1520 FOR FC-2009-5:2021-04-30:19:24--1--1-0-0
FRI, AUG 05 2011 15:57

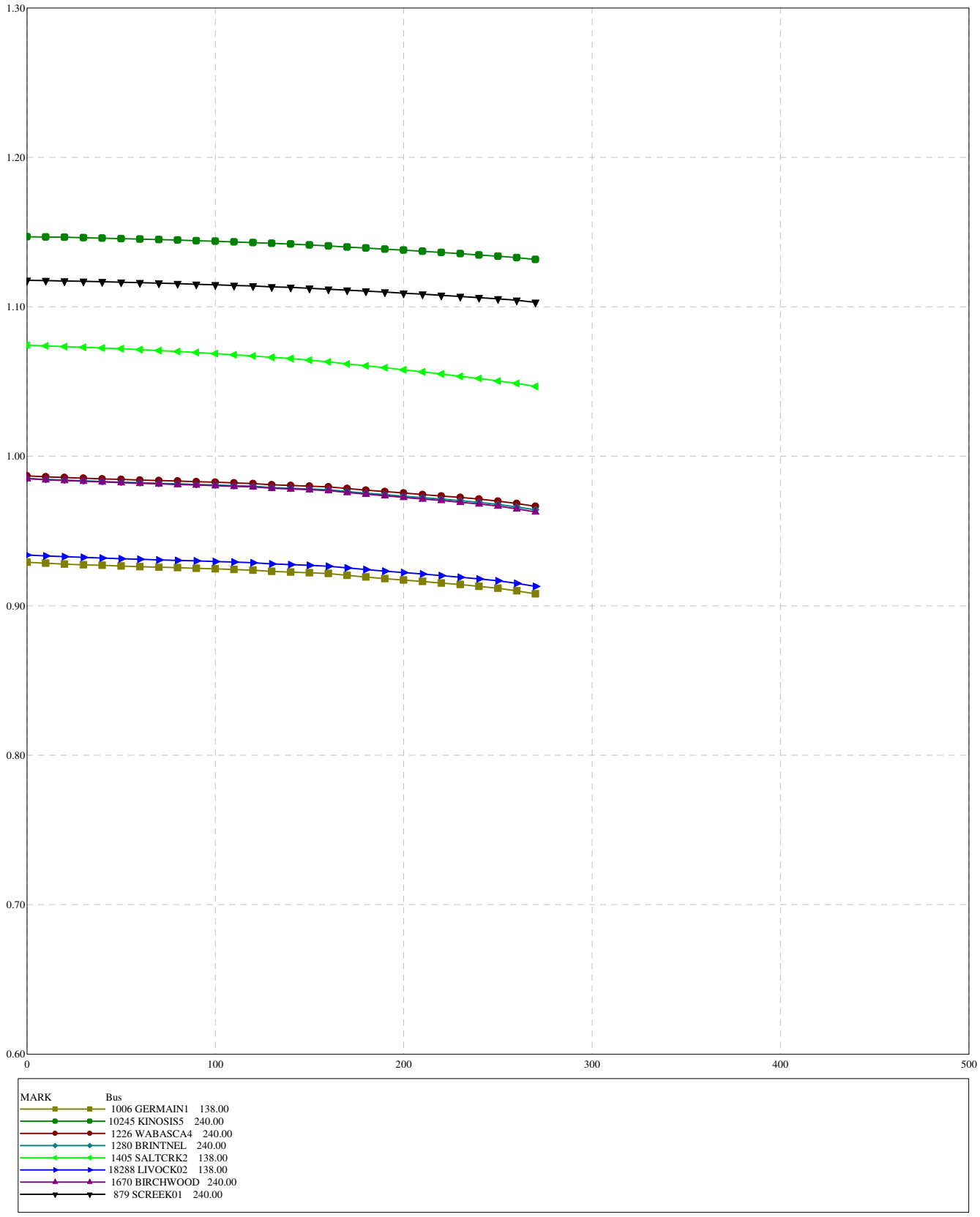

Figure D3-2015SP_EX-5

TASMO MODEL; OUTPUT GENERATED 2010-03-01 14:06:46
SWINGBUS 1520 FOR FC-2009-5:2021-04-30:19:24--1--1-0-0
FRI, AUG 05 2011 15:57

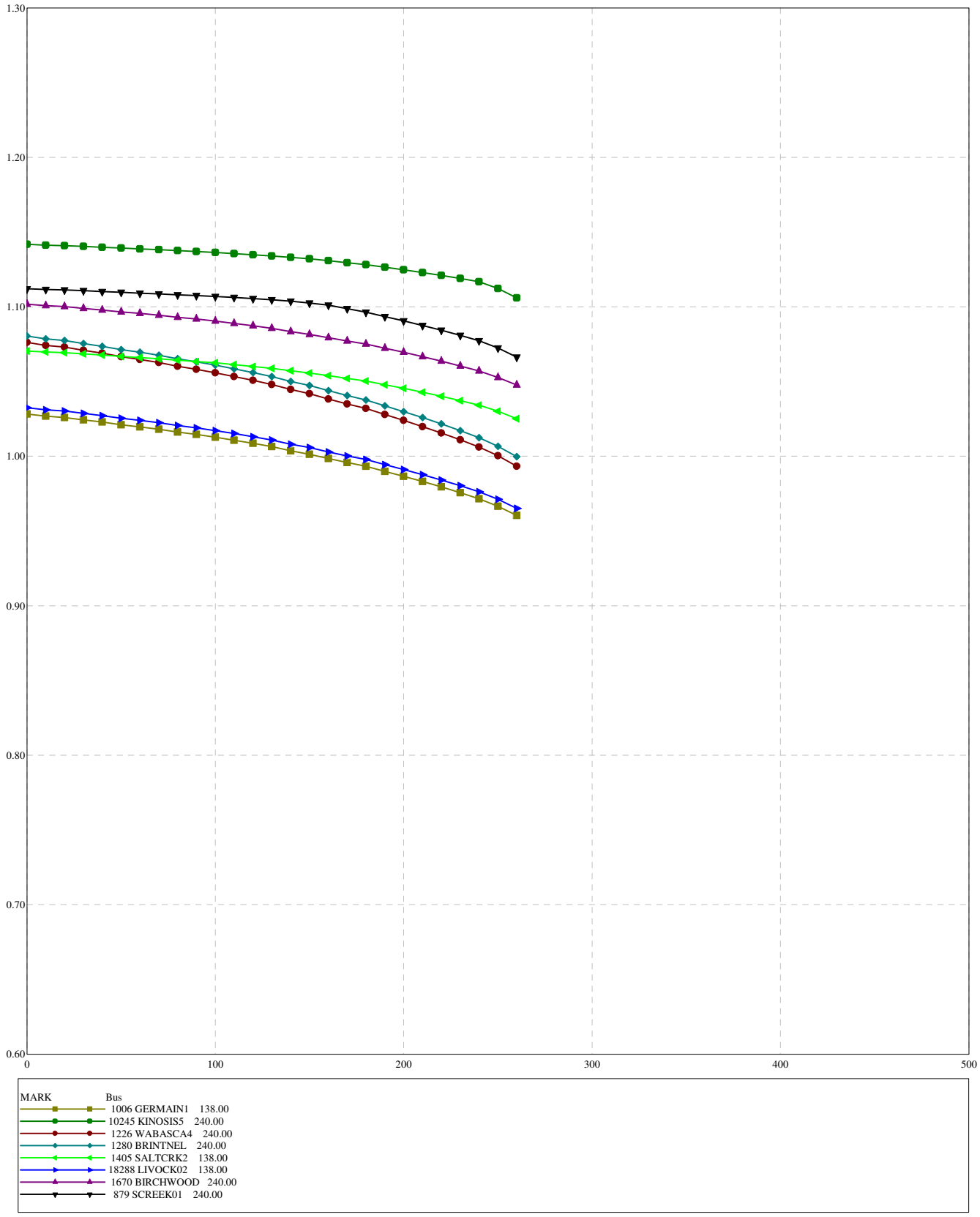

Figure D3-2015SP_EX-6

TASMO MODEL; OUTPUT GENERATED 2010-03-01 14:06:46
SWINGBUS 1520 FOR FC-2009-5:2021-04-30:19:24--1--1-0-0
FRI, AUG 05 2011 15:45

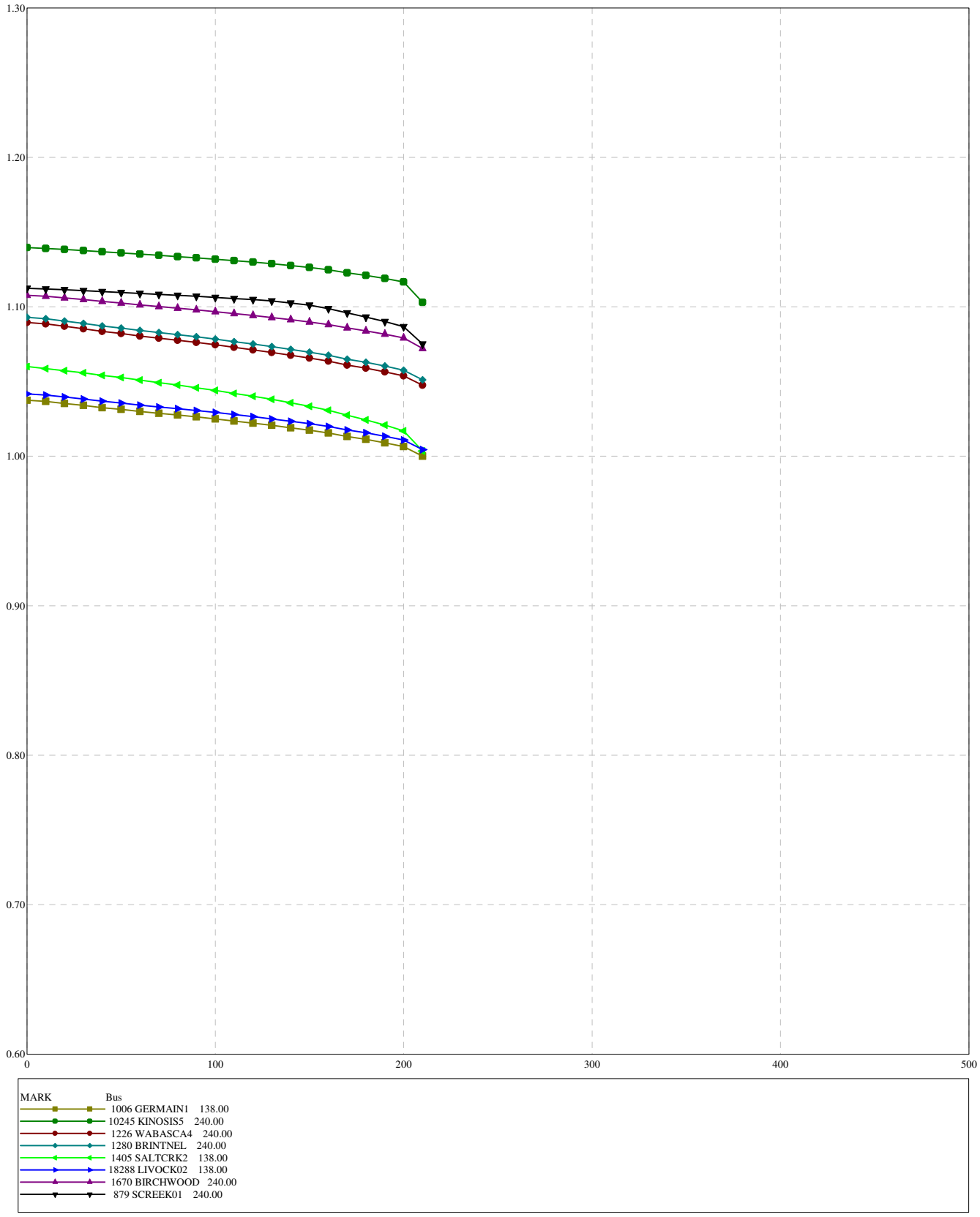

Figure D3-2015SP_EX-7

TASMO MODEL; OUTPUT GENERATED 2010-03-01 14:06:46
SWINGBUS 1520 FOR FC-2009-5:2021-04-30:19:24--1--1-0-0
FRI, AUG 05 2011 15:54

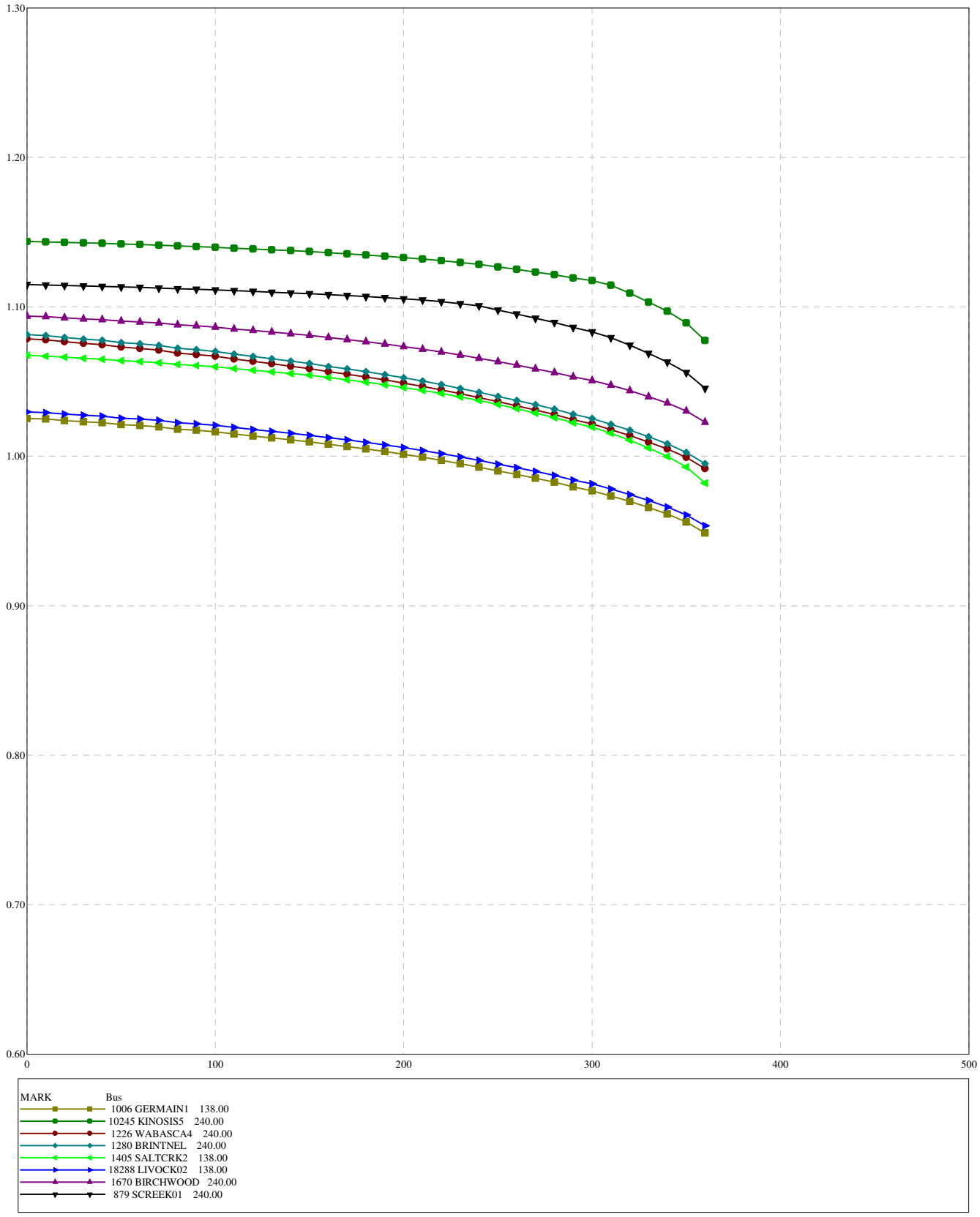

Figure D3-2015SP_EX-8

TASMO MODEL; OUTPUT GENERATED 2010-03-01 14:06:46
SWINGBUS 1520 FOR FC-2009-5:2021-04-30:19:24--1--1-0-0
FRI, AUG 05 2011 15:44

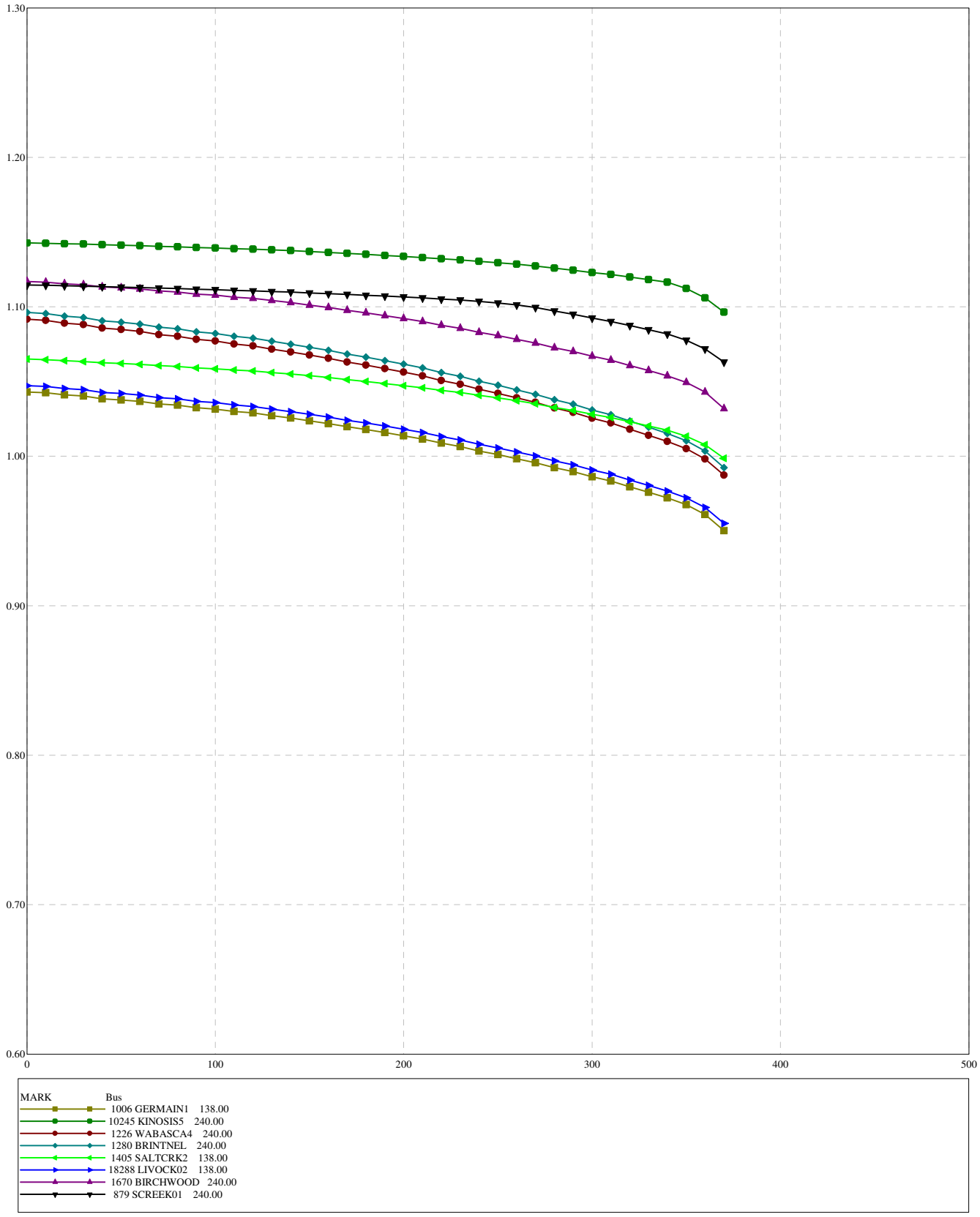

Figure D3-2015SP_EX-9

Table D-4: P-V Analysis Summary – 2015 Winter Peak Existing

Figure Number	System Normal and Category B Contingencies	Forecasted 2015 Winter Peak (MW)	105% Margin (MW)	Nose Point (MW)
Figure D4-2015WP_EX-1	Base Case	2074	2178	2474
Figure D4-2015WP_EX-2	240 kV 971L Conklin 762S to Sunday Creek	2074	2178	2284
Figure D4-2015WP_EX-3	240 kV Kinosis 856S to Leismer 72S	2074	2178	2314
Figure D4-2015WP_EX-4	240 kV 9L930 Whitefish 825S to Leismer 72S	2074	2178	2344
Figure D4-2015WP_EX-5	240 kV 9L74 Dover 888S to Birchwood 960S	2074	2178	2344
Figure D4-2015WP_EX-6	240 kV RoundHill 1049S to Heart Lake 898S	2074	2178	2374
	Category C5 Contingencies	**Forecasted 2015 Winter Peak (MW)**	**102.5% Margin (MW)**	**Maximum Operating Limit (MW)**
Figure D4-2015WP_EX-7	9L08 9L09, Dover 888S to Ells River 2079S and Joslyn 849S Double Circuit 240 kV Lines	2074	2126	2234
Figure D4-2015WP_EX-8	9L76 9L09, Joslyn 849S to Ells River 2079S and Dover 888S Double Circuit 240 kV Lines	2074	2126	2414
Figure D4-2015WP_EX-9	9L01 9L58, Dover 888S to Ruth Lake 848S Double Circuit 240 kV Lines	2074	2126	2454

TASMO MODEL; OUTPUT GENERATED 2010-03-01 14:45:14
SWINGBUS 1520 FOR FC-2009-5:2016-04-30:19:24--1--1-0-0
FRI, JUN 24 2011 17:11

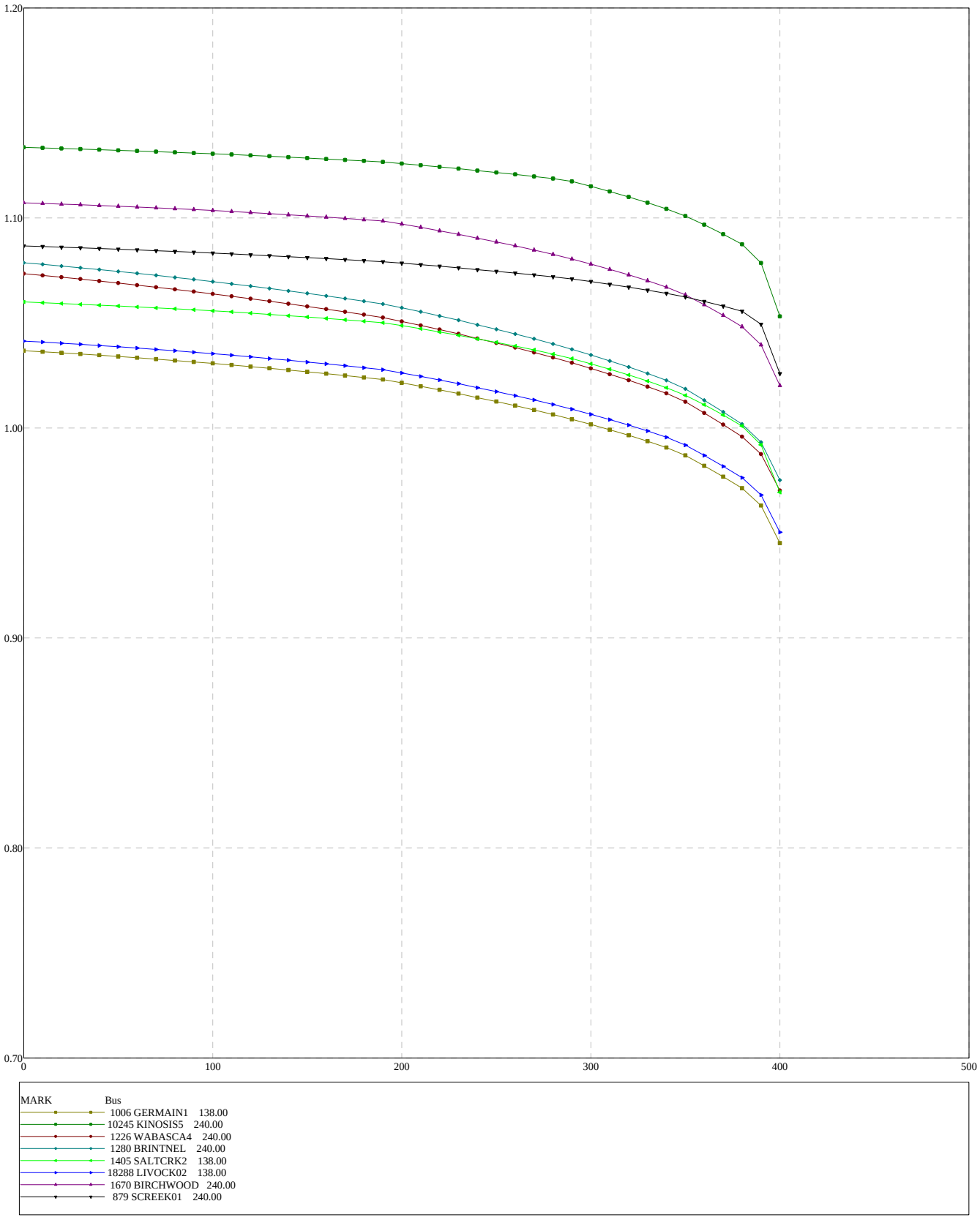

Figure D4-2015WP_EX-1

TASMO MODEL; OUTPUT GENERATED 2010-03-01 14:45:14
SWINGBUS 1520 FOR FC-2009-5:2016-04-30:19:24--1--1-0-0
FRI, JUN 24 2011 17:12

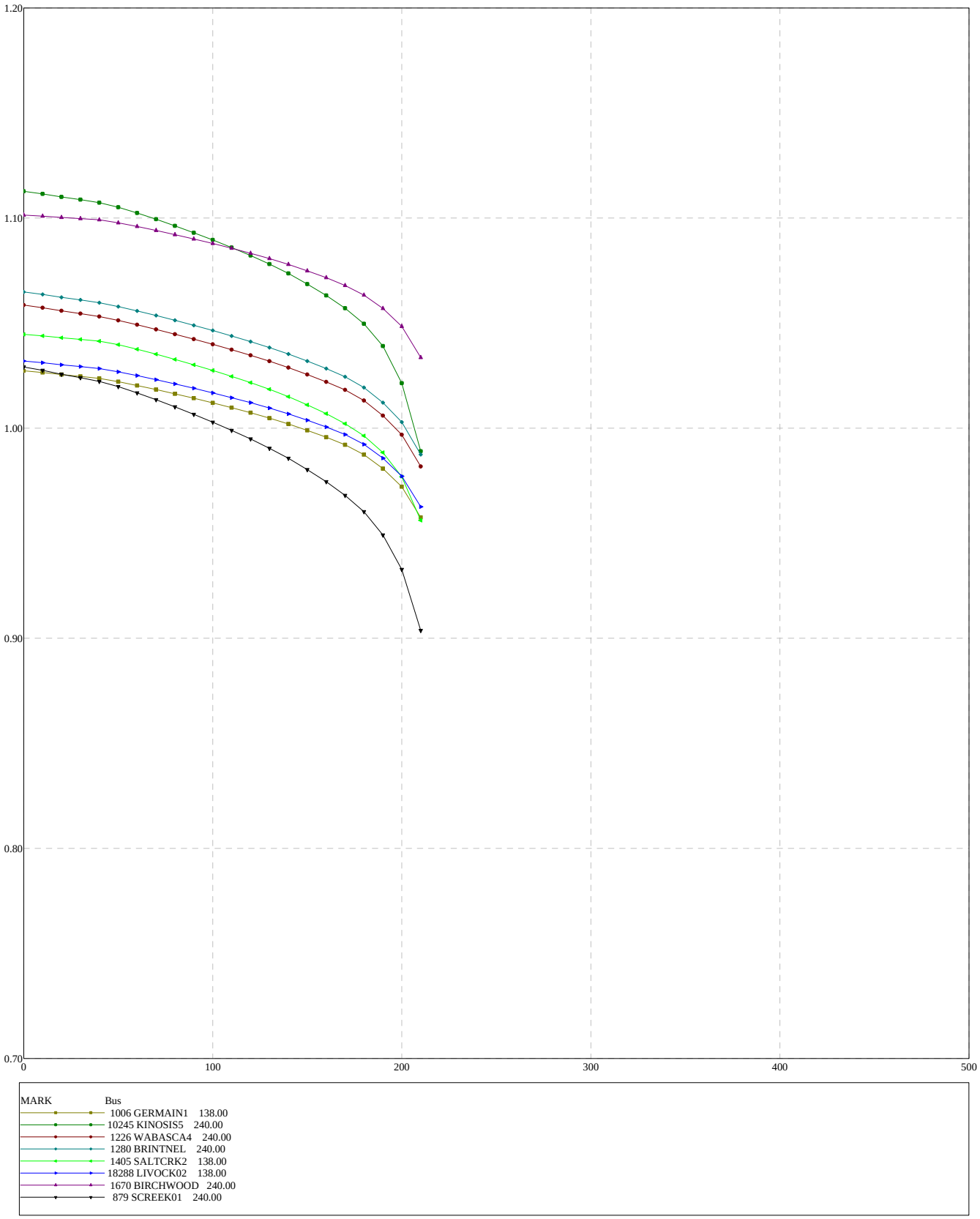

Figure D4-2015WP_EX-2

TASMO MODEL; OUTPUT GENERATED 2010-03-01 14:45:14
SWINGBUS 1520 FOR FC-2009-5:2016-04-30:19:24--1--1-0-0
FRI, JUN 24 2011 17:12

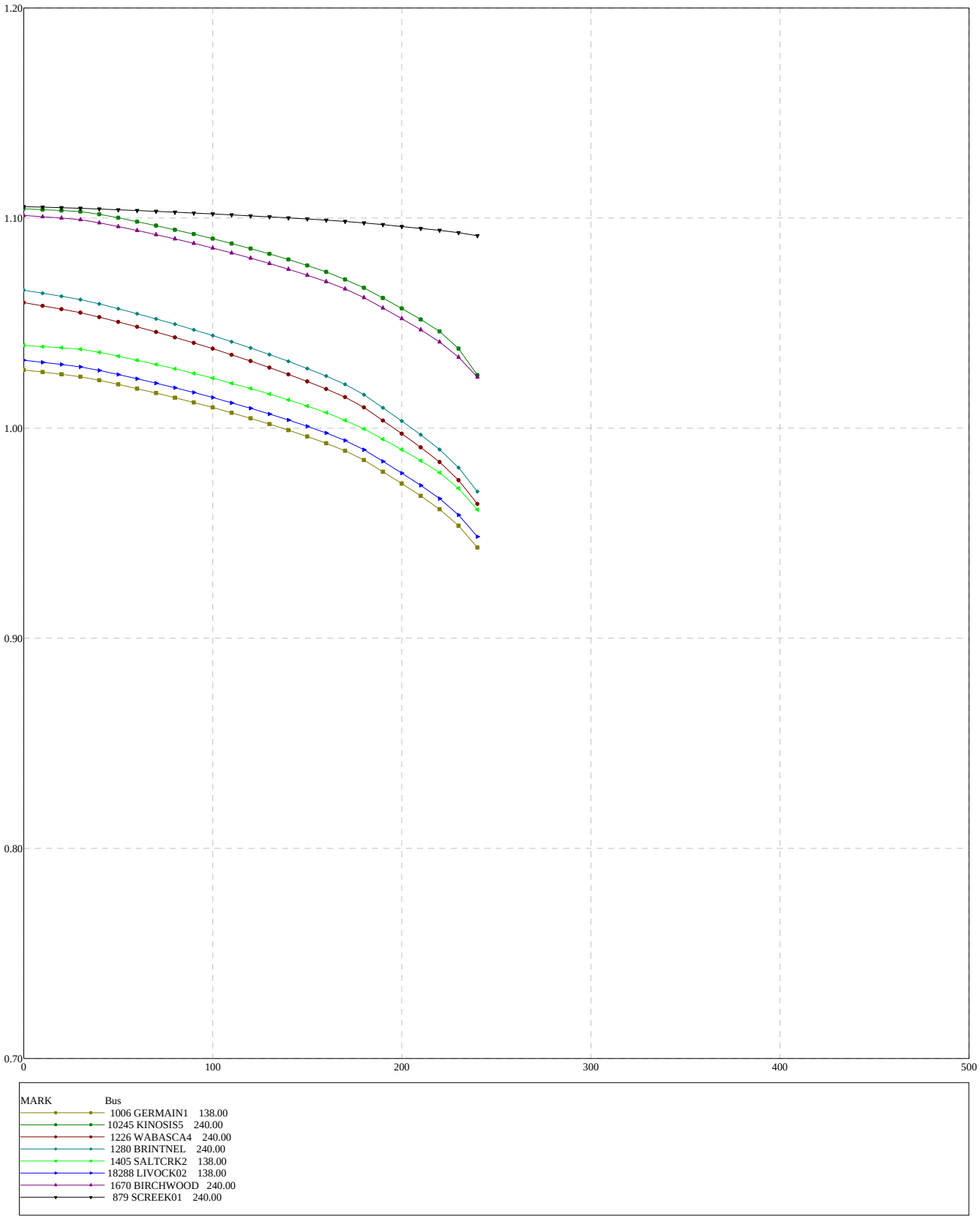

Figure D4-2015WP_EX-3

TASMO MODEL; OUTPUT GENERATED 2010-03-01 14:45:14
SWINGBUS 1520 FOR FC-2009-5:2016-04-30:19:24--1--1-0-0
FRI, JUN 24 2011 17:13

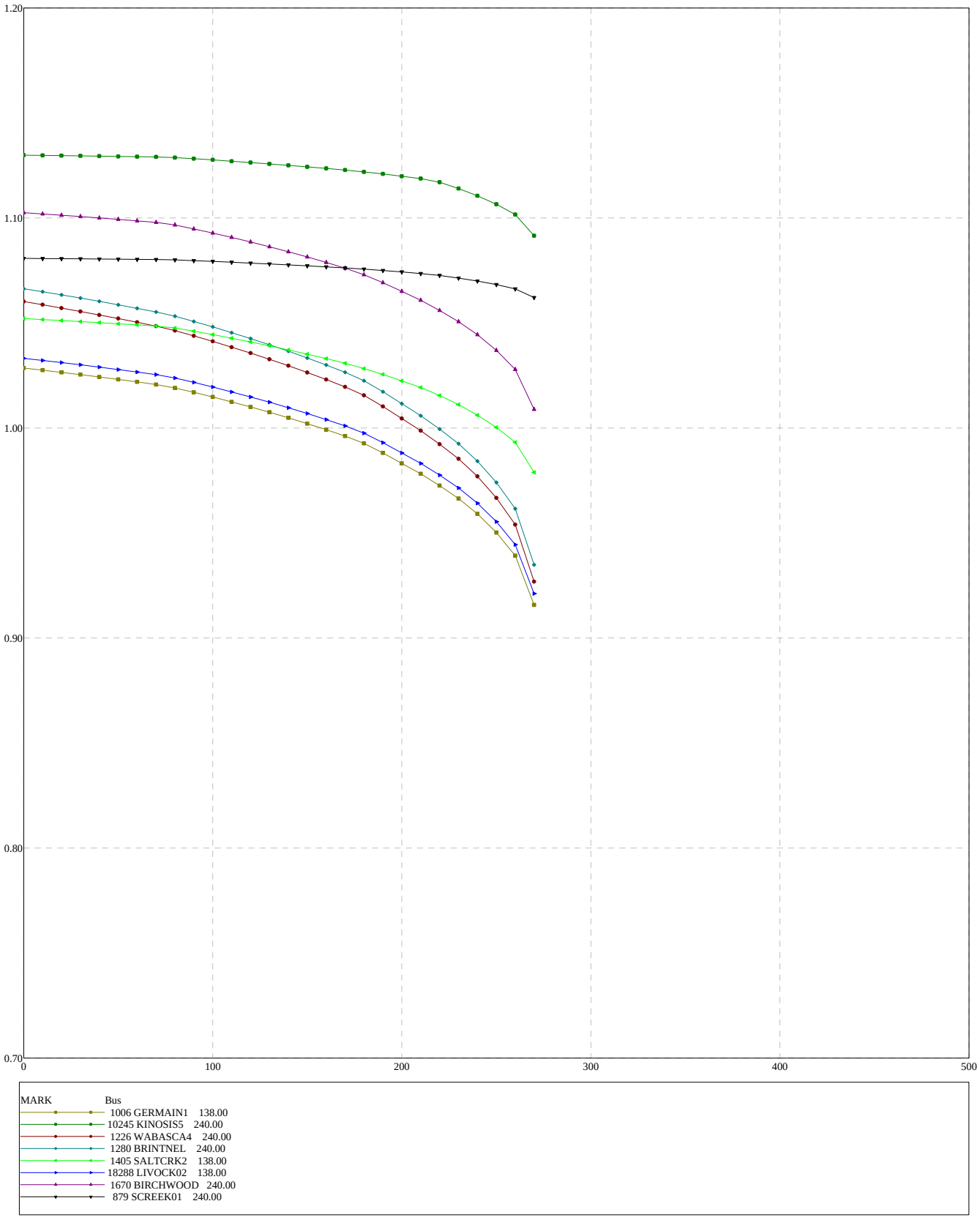

Figure D4-2015WP_EX-4

TASMO MODEL; OUTPUT GENERATED 2010-03-01 14:45:14
SWINGBUS 1520 FOR FC-2009-5:2016-04-30:19:24--1--1-0-0
FRI, JUN 24 2011 17:13

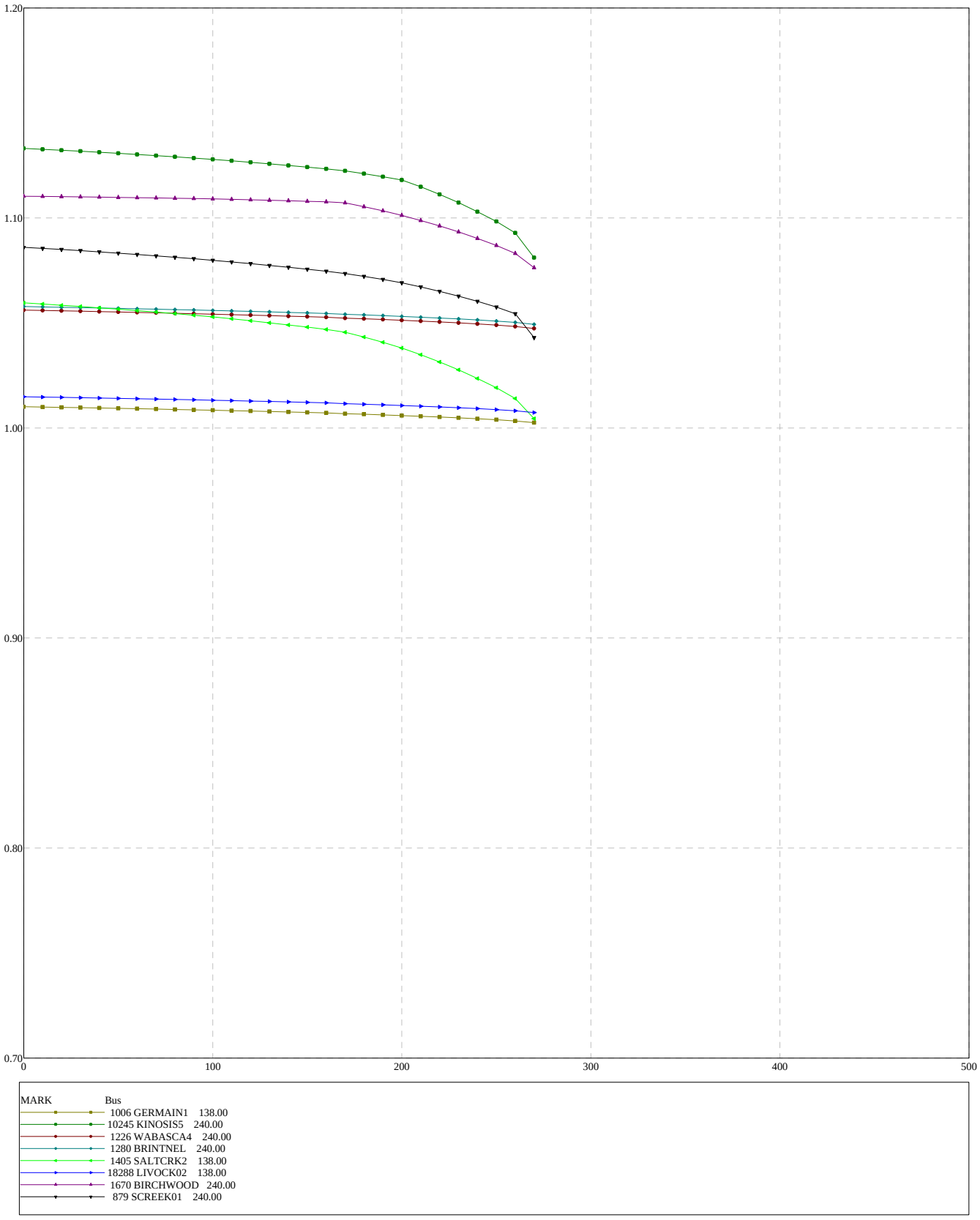

Figure D4-2015WP_EX-5

TASMO MODEL; OUTPUT GENERATED 2010-03-01 14:45:14
SWINGBUS 1520 FOR FC-2009-5:2016-04-30:19:24--1--1-0-0
FRI, JUN 24 2011 17:13

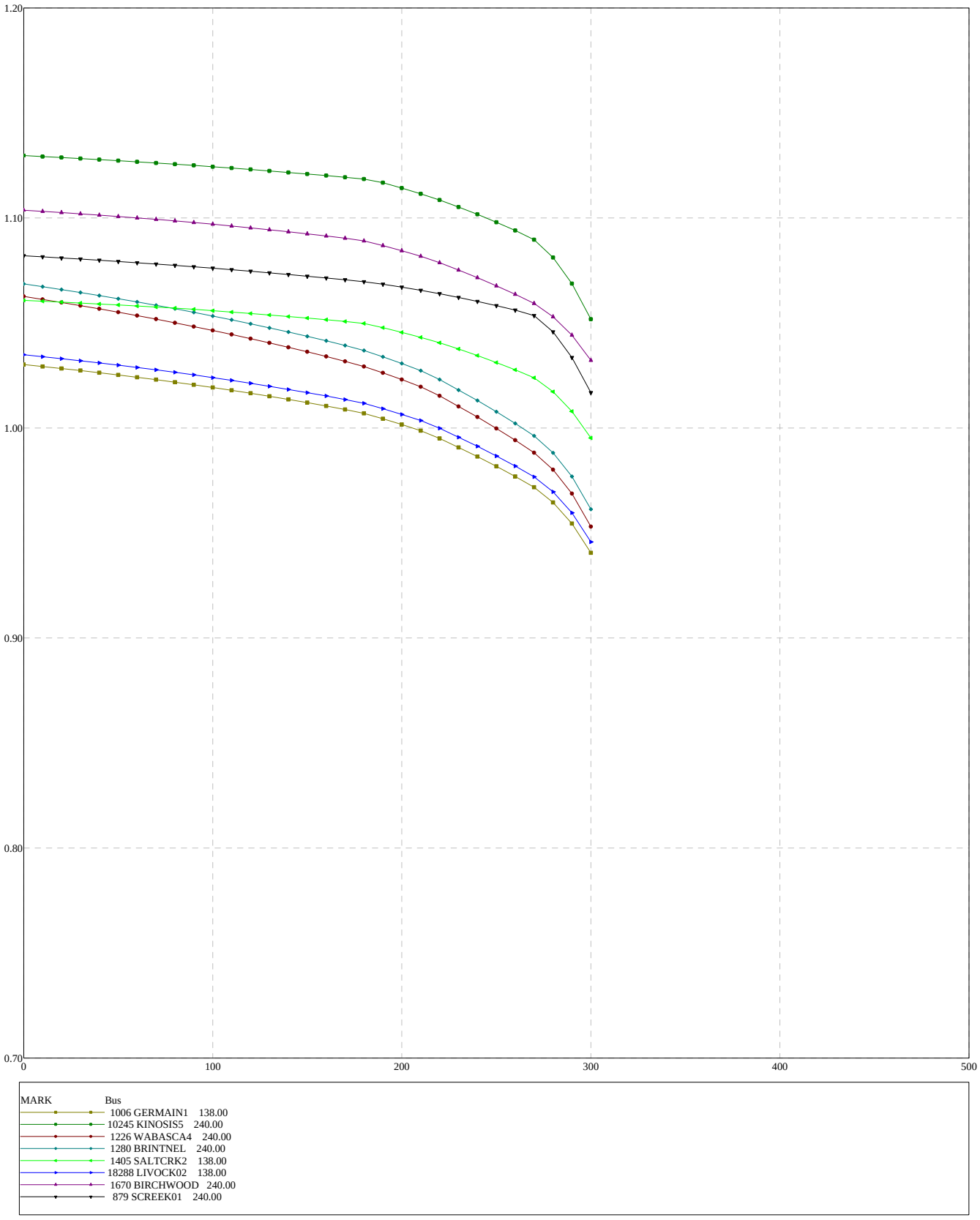

Figure D4-2015WP_EX-6

TASMO MODEL; OUTPUT GENERATED 2010-03-01 14:45:14
SWINGBUS 1520 FOR FC-2009-5:2016-04-30:19:24--1--1-0-0
FRI, JUN 24 2011 17:10

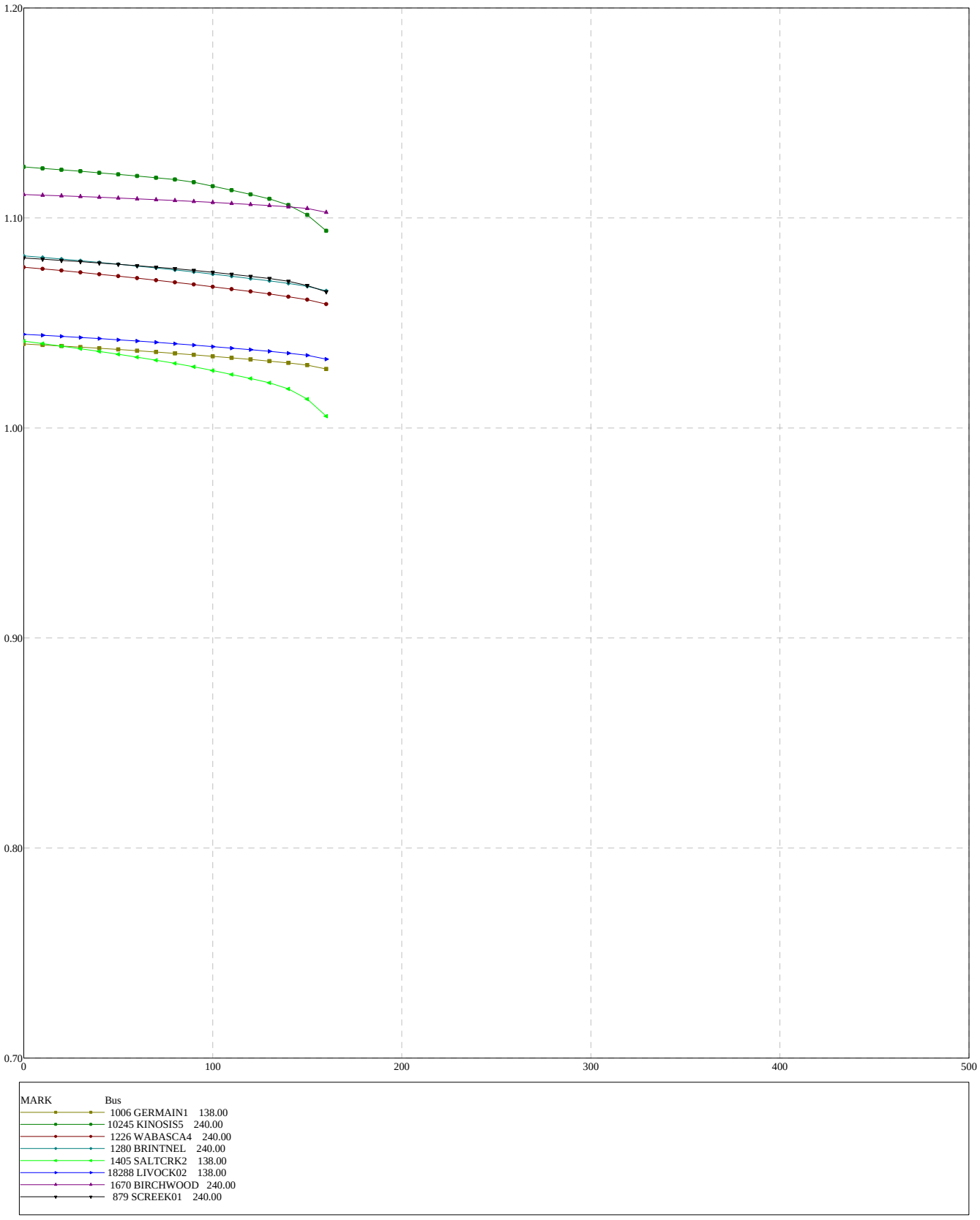

Figure D4-2015WP_EX-7

TASMO MODEL; OUTPUT GENERATED 2010-03-01 14:45:14
SWINGBUS 1520 FOR FC-2009-5:2016-04-30:19:24--1--1-0-0
FRI, JUN 24 2011 17:10

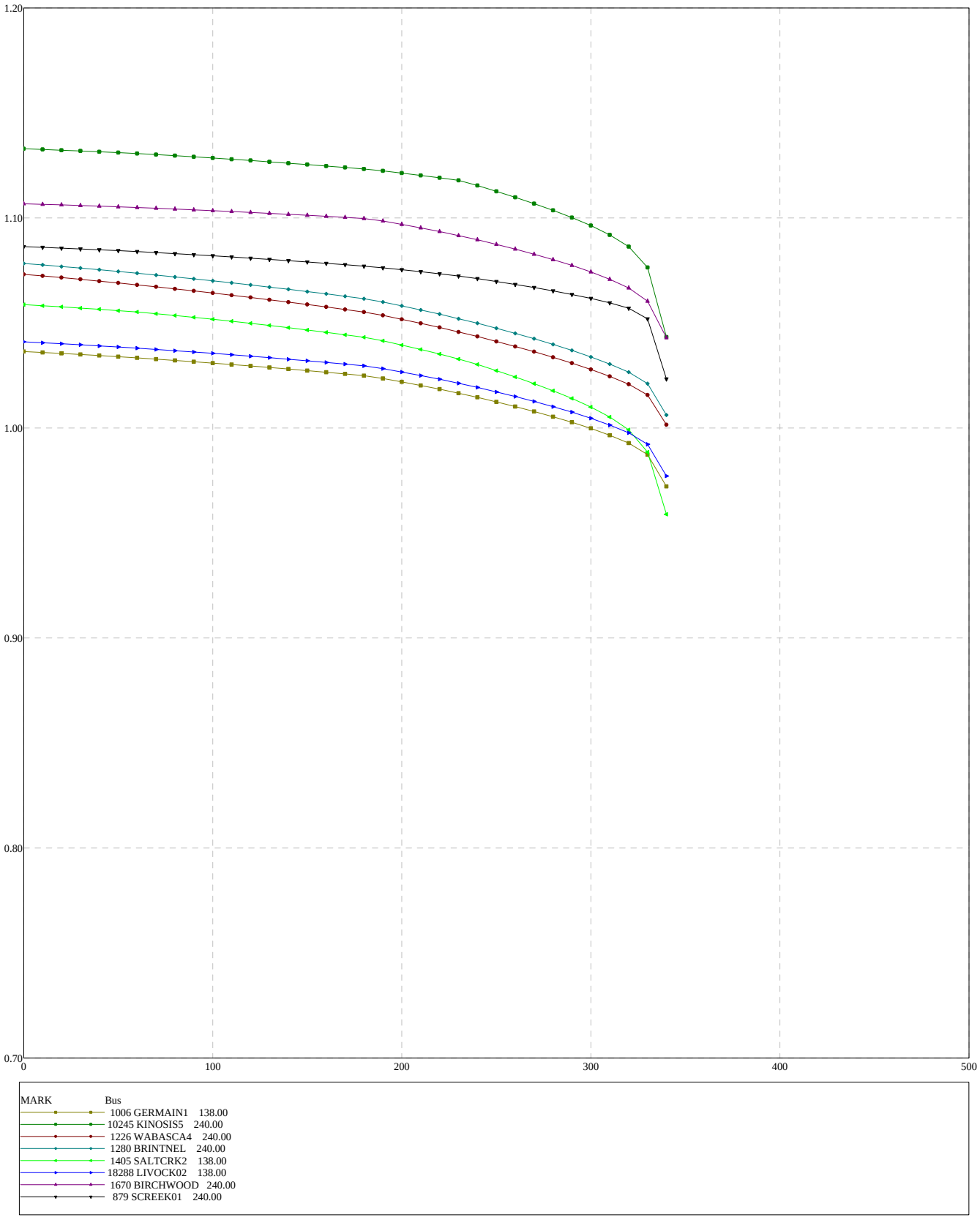

Figure D4-2015WP_EX-8

TASMO MODEL; OUTPUT GENERATED 2010-03-01 14:45:14
SWINGBUS 1520 FOR FC-2009-5:2016-04-30:19:24--1--1-0-0
FRI, JUN 24 2011 17:09

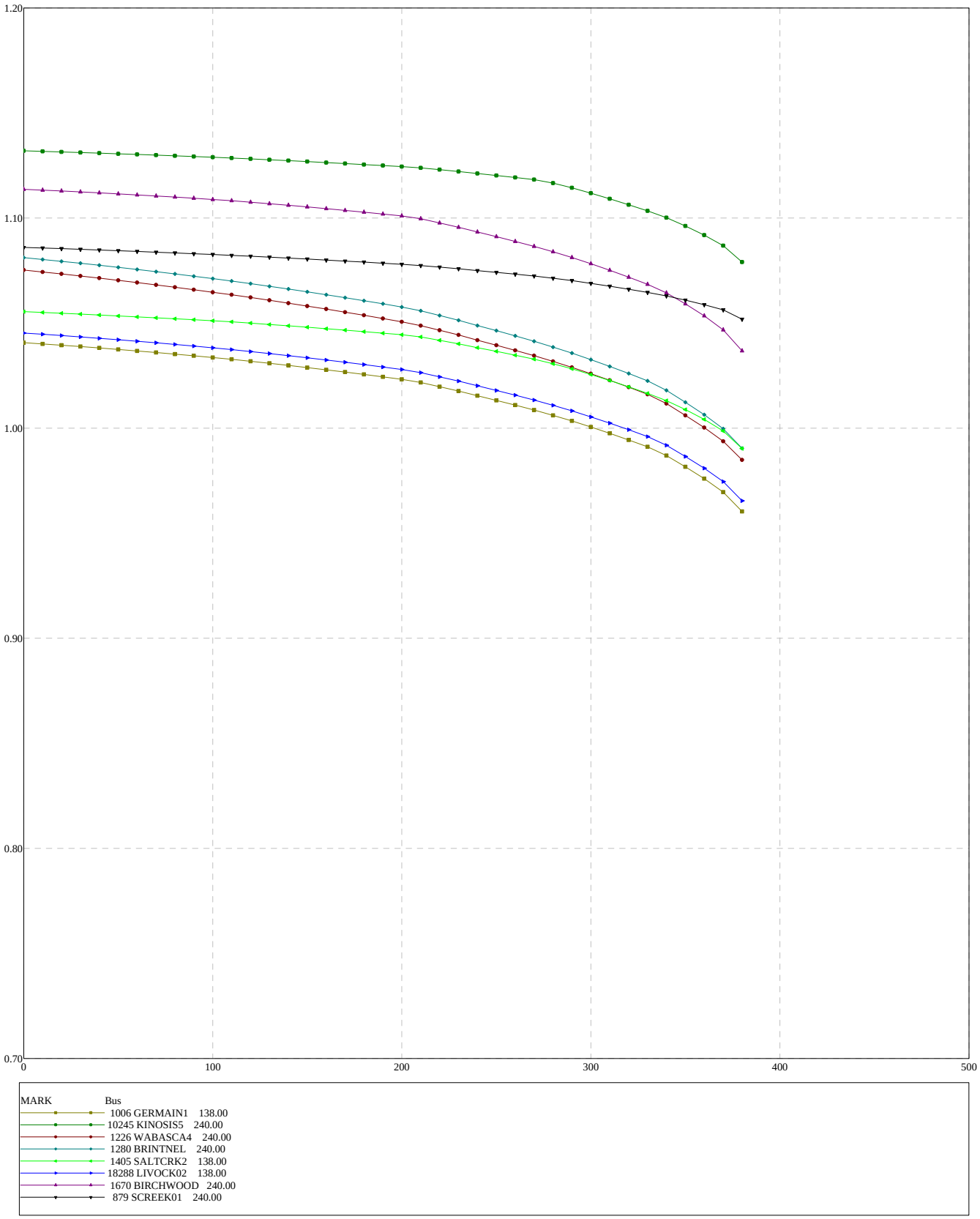

Figure D4-2015WP_EX-9

ATTACHMENT E
Near Term Power Flow Analysis

Table E-1 Power Flow Analysis Summary- 2013 Summer Peak with NW FMM

Figure Number	Contingency	Thermal Violation	Voltage Violation
Figure E-2013SP-1	Base Case (N - 0)	None	None
Figure E-2013SP-2	Open 9L56 240kV line (WABASCA 720S to Brintnell 876S)	None	None
Figure E-2013SP-3	Open 9L15 240kV line (WESLEYCREEK 834S to Brintnell 876S	None	None
Figure E-2013SP-4	Open 9L10 240kV line (Brintnell 876S to Livock 939S)	None	None
Figure E-2013SP-5	Open 9L57 240kV line (Livock 939S to Birchwood Creek 960S)	None	None
Figure E-2013SP-6	Open 9L74 240kV line (Birchwood Creek 960S to Dover 888S)	None	None
Figure E-2013SP-7	Open 9L09 240kV line (Dover 888S to Joslyn Creek 849S)	None	None
Figure E-2013SP-8	Open a 240kV line (FWFMM to to Dover 888S)	None	None
Figure E-2013SP-9	Open a 240kV line (FWFMM to to Joslyn Creek 849S)	None	None
Figure E-2013SP-10	Open 9L32 240kV line (Joslyn Creek 849S to Bitumont 941S)	None	None
Figure E-2013SP-11	Open 9L01 240kV line (Dover 888S to Ruth Lake 848S)	None	None
Figure E-2013SP-12	Open 9L23 240kV line (Ruth Lake 848S to Salt Creek 977S)	None	None
Figure E-2013SP-13	Open 9L990 240kV line (Salt Creek 977S to Kinosis 856S)	None	None
Figure E-2013SP-14	Open 9L990 240kV line (Kinosis 856S to Leismer 72S)	None	None
Figure E-2013SP-15	Open 9L930 240kV line (Leismer 72S to Whitefish Lake 825S)	None	None
Figure E-2013SP-16	Open 9L22 240kV line (Whitefish Lake 825S to Heart Lake 898S)	None	None
Figure E-2013SP-17	Open 9L55 240kV line (Heart Lake 898S to RoundHill POD)	None	None
Figure E-2013SP-18	Open 9L55 240kV line (RoundHill POD to McMillan 885S)	None	None
Figure E-2013SP-19	Open 9L07 240kV line (McMillan 885S TO Dover 888S)	None	None

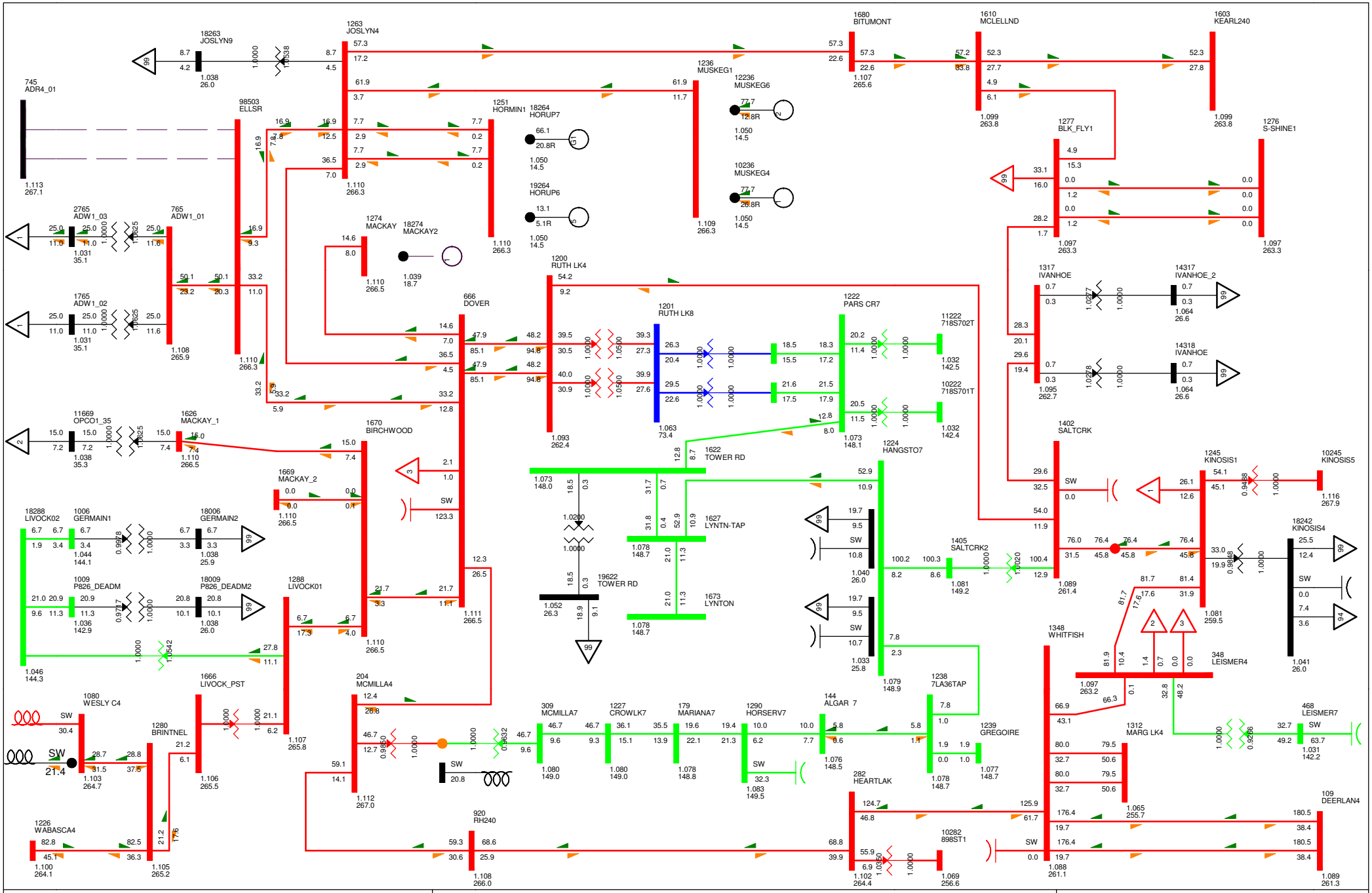

BC - Alberta (IMPORT)769.6 MW

2012WP BASE CASE
SWINGBUS 1520 FOR FC-2009-5:2013-04-30:19:24--1--1-0-0
WED, AUG 31 2011 16:11

NW FMM STUDY

Figure E-2013SP-1

Bus - VOLTAGE (kV/PU)
Branch - MW/Mvar
Equipment - MW/Mvar
100.0%RATEB
1.120OV 0.950UV
kV: <=34.500 <=69.000 <=138.000 <=240.000 <=500.000 >500.000

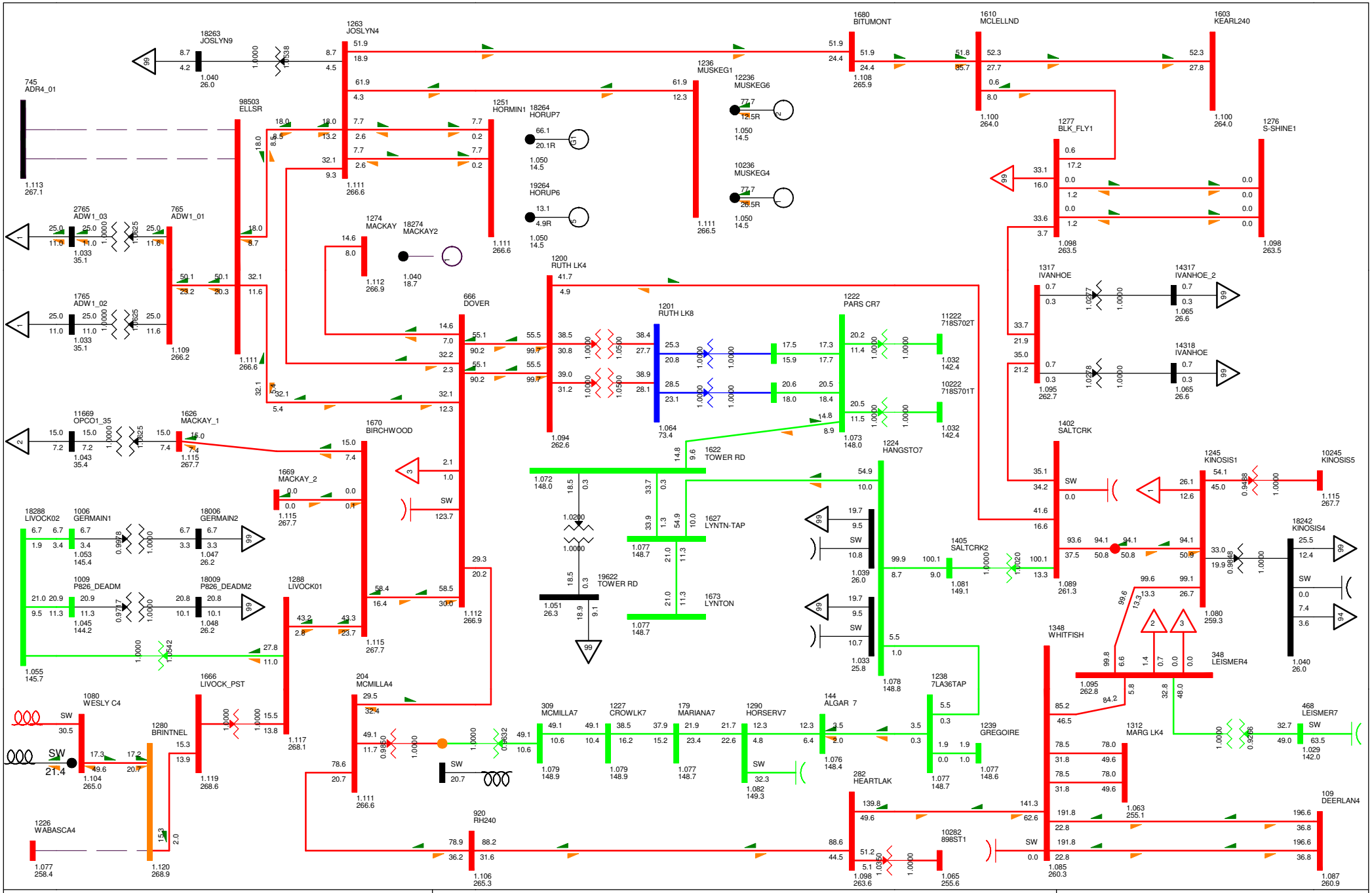

BC - Alberta (IMPORT)774.5 MW

2012WP BASE CASE
SWINGBUS 1520 FOR FC-2009-5:2013-04-30:19:24--1--1-0-0
WED, AUG 31 2011 16:11

NW FMM STUDY

Figure E-2013SP-2

Bus - VOLTAGE (kV/PU)
Branch - MW/Mvar
Equipment - MW/Mvar
100.0%RATEB
1.120OV 0.950UV
kV: <=34.500 <=69.000 <=138.000 <=240.000 <=500.000 >500.000

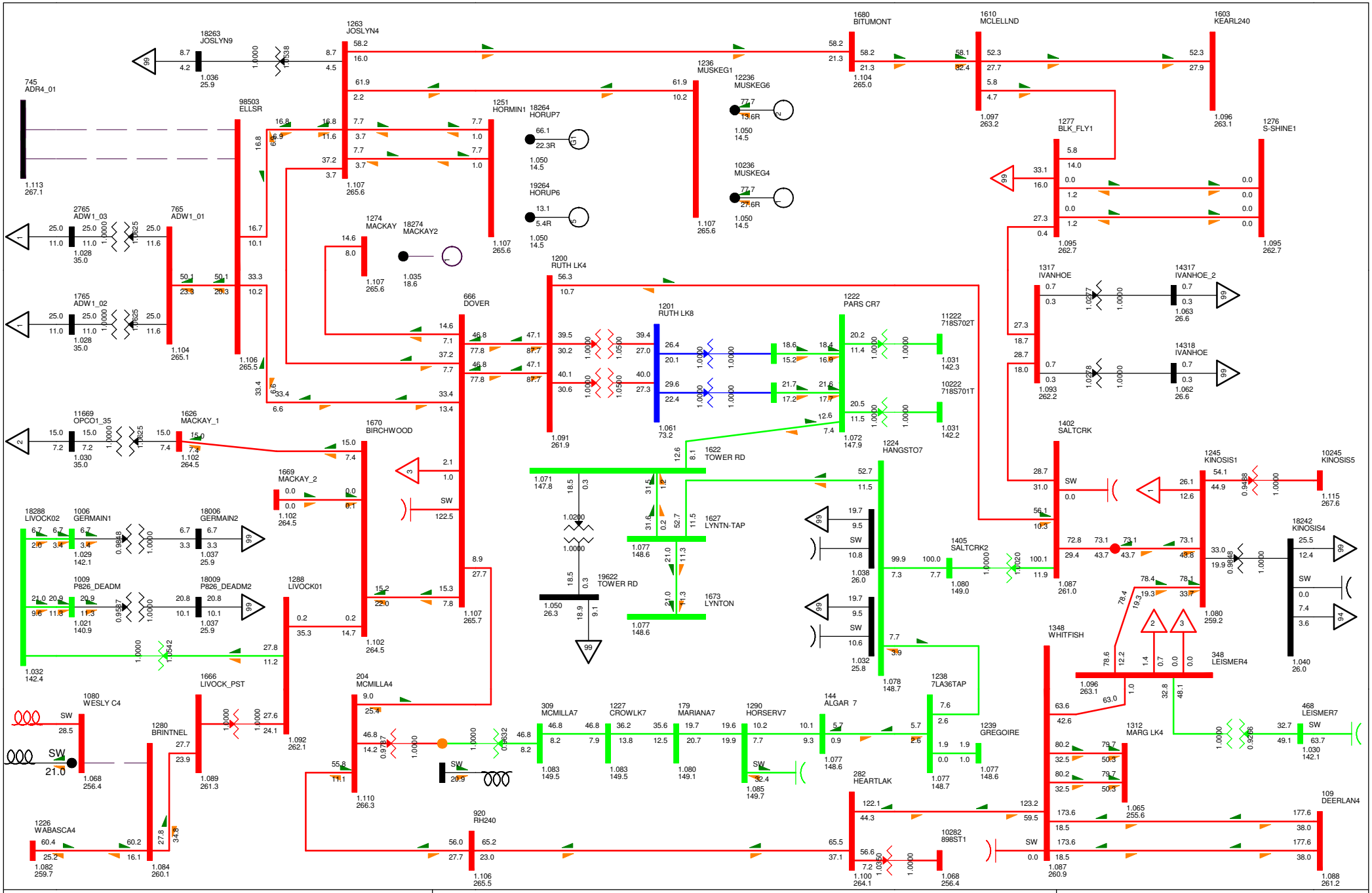

BC - Alberta (IMPORT)771.2 MW

2012WP BASE CASE
SWINGBUS 1520 FOR FC-2009-5:2013-04-30:19:24--1--1-0-0
WED, AUG 31 2011 16:11

NW FMM STUDY

Figure E-2013SP-3

Bus - VOLTAGE (kV/PU)
Branch - MW/Mvar
Equipment - MW/Mvar
100.0%RATEB
1.120OV 0.950UV
kV: <=34.500 <=69.000 <=138.000 <=240.000 <=500.000 >500.000

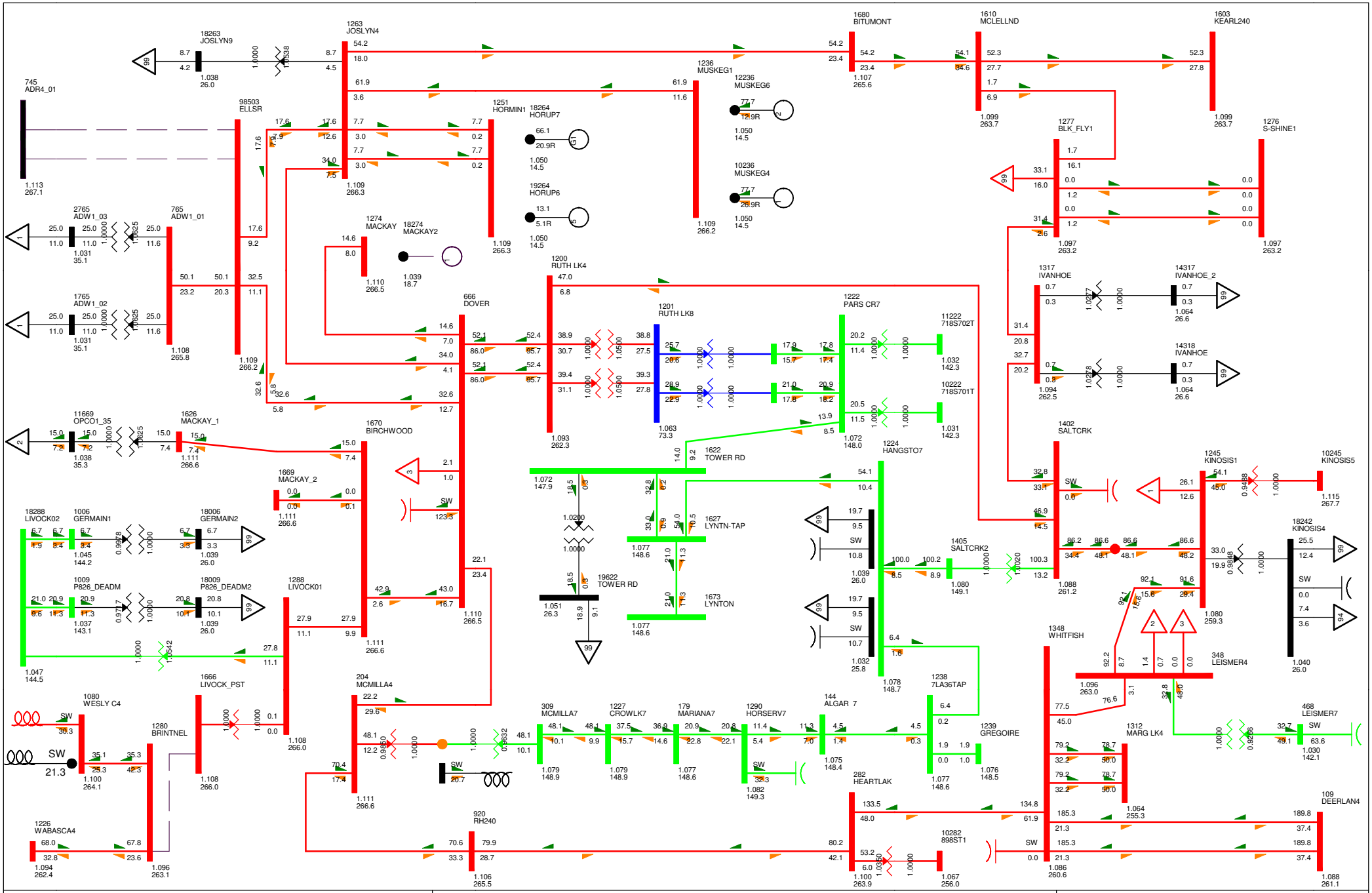

BC - Alberta (IMPORT)769.9 MW

2012WP BASE CASE
SWINGBUS 1520 FOR FC-2009-5:2013-04-30:19:24--1--1-0-0
WED, AUG 31 2011 16:11

NW FMM STUDY

Figure E-2013SP-4

Bus - VOLTAGE (kV/PU)
Branch - MW/Mvar
Equipment - MW/Mvar
100.0%RATEB
1.120OV 0.950UV
kV: <=34.500 <=69.000 <=138.000 <=240.000 <=500.000 >500.000

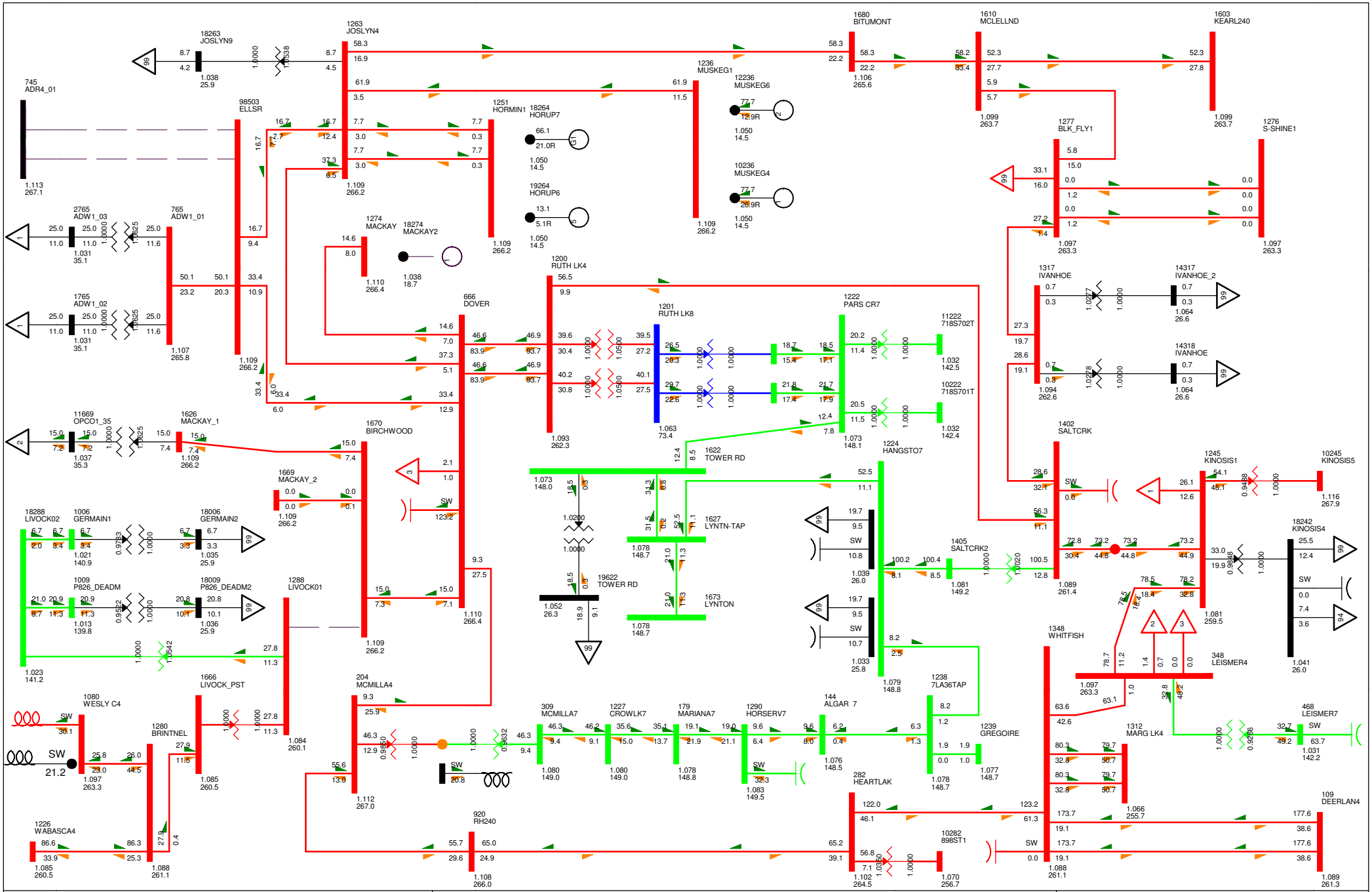

BC - Alberta (IMPORT)769.8 MW

2012WP BASE CASE
SWINGBUS 1520 FOR FC-2009-5:2013-04-30:19:24--1--1-0-0
WED, AUG 31 2011 16:11

NW FMM STUDY

Figure E-2013SP-5

Bus - VOLTAGE (kV/PU)
Branch - MW/Mvar
Equipment - MW/Mvar
100.0%RATEB
1.120OV 0.950UV
kV: <=34.500 <=69.000 <=138.000 <=240.000 <=500.000 >500.000

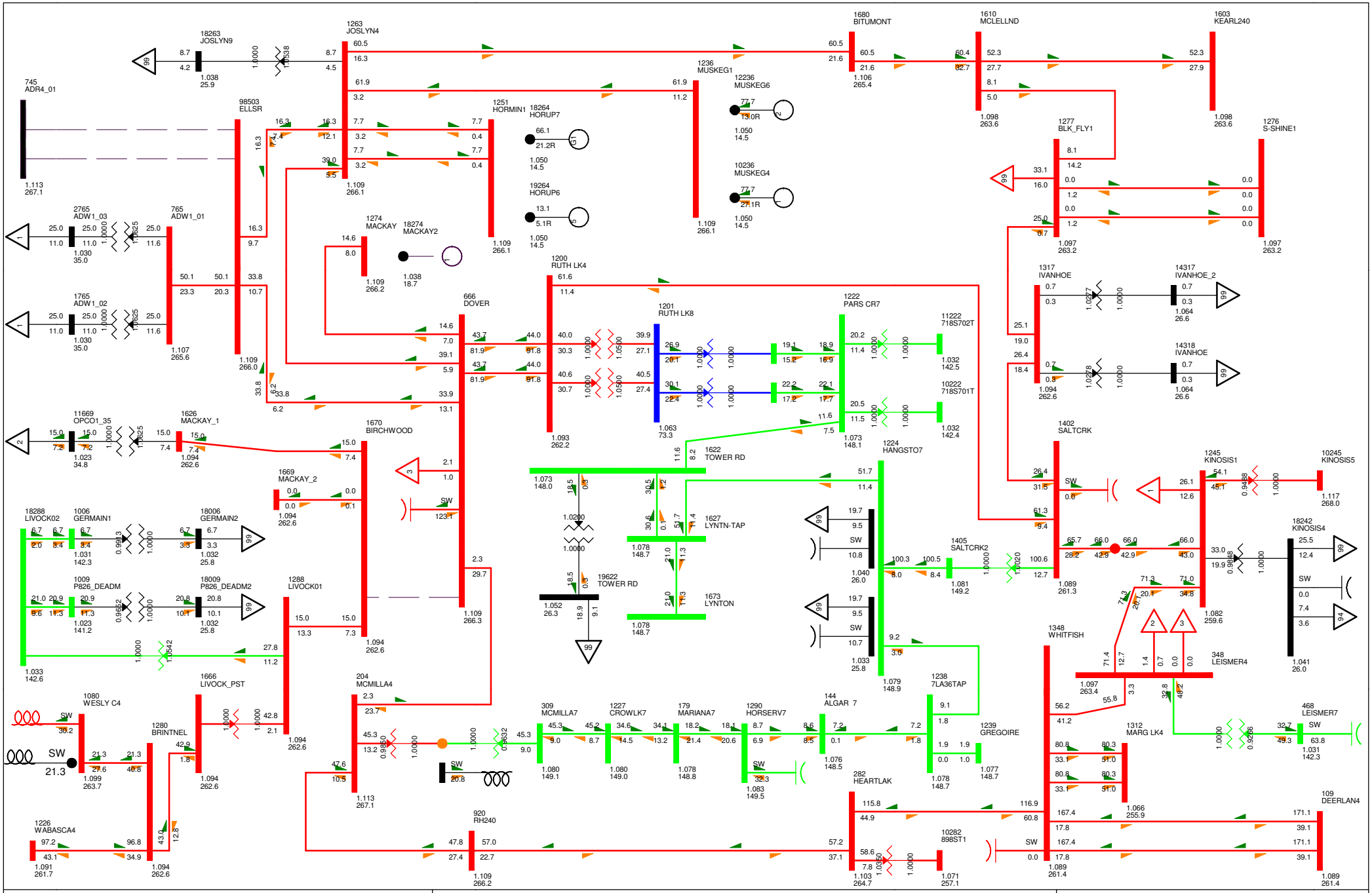

BC - Alberta (IMPORT)770.1 MW

2012WP BASE CASE
SWINGBUS 1520 FOR FC-2009-5:2013-04-30:19:24--1--1-0-0
WED, AUG 31 2011 16:11

NW FMM STUDY

Figure E-2013SP-6

Bus - VOLTAGE (kV/PU)
Branch - MW/Mvar
Equipment - MW/Mvar
100.0%RATEB
1.120OV 0.950UV
kV: <=34.500 <=69.000 <=138.000 <=240.000 <=500.000 >500.000

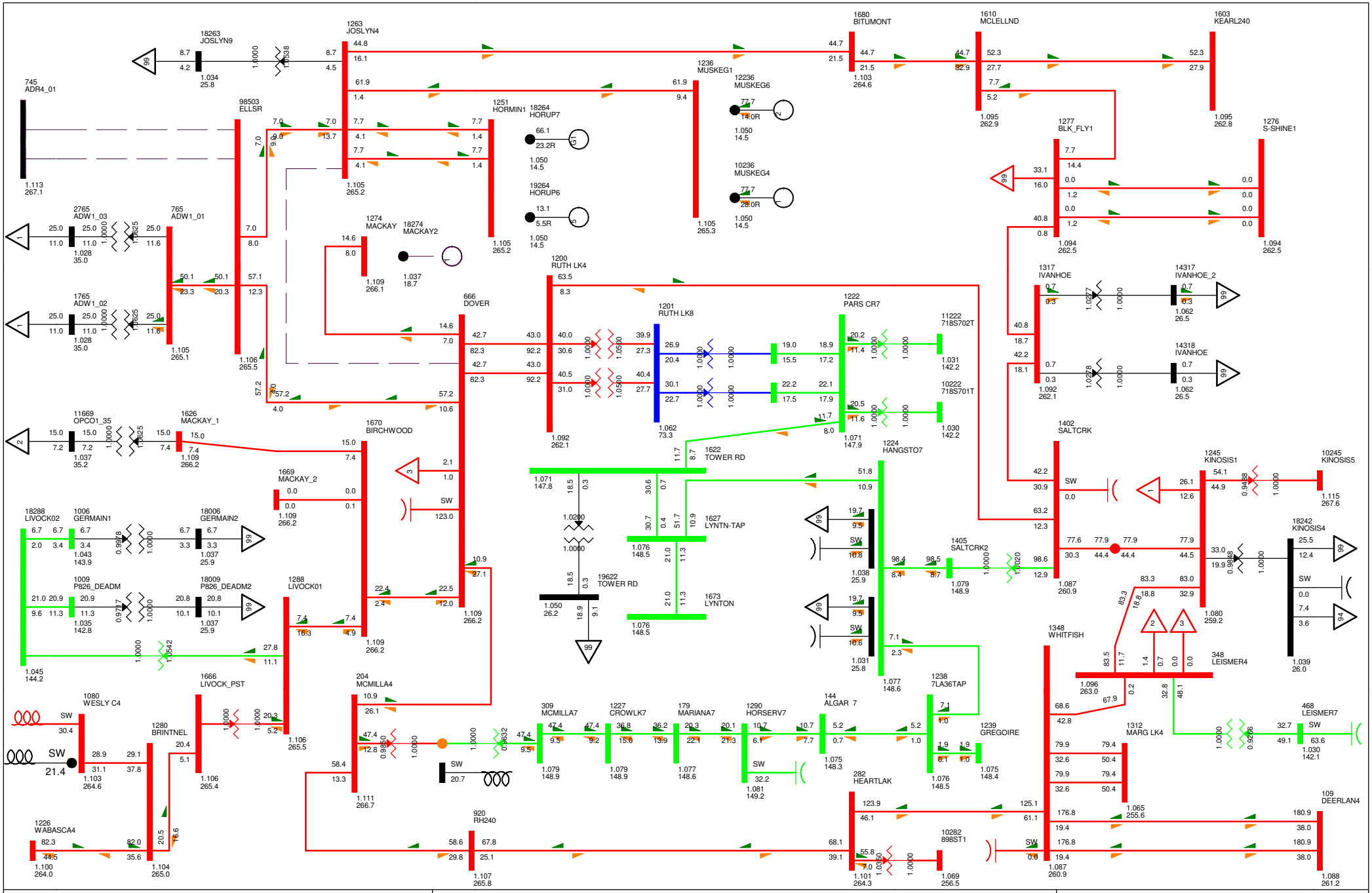

BC - Alberta (IMPORT)769.7 MW

2012WP BASE CASE
SWINGBUS 1520 FOR FC-2009-5:2013-04-30:19:24--1--1-0-0
WED, AUG 31 2011 16:12

NW FMM STUDY

Figure E-2013SP-7

Bus - VOLTAGE (kV/PU)
Branch - MW/Mvar
Equipment - MW/Mvar
100.0%RATEB
1.120OV 0.950UV
kV: <=34.500 <=69.000 <=138.000 <=240.000 <=500.000 >500.000

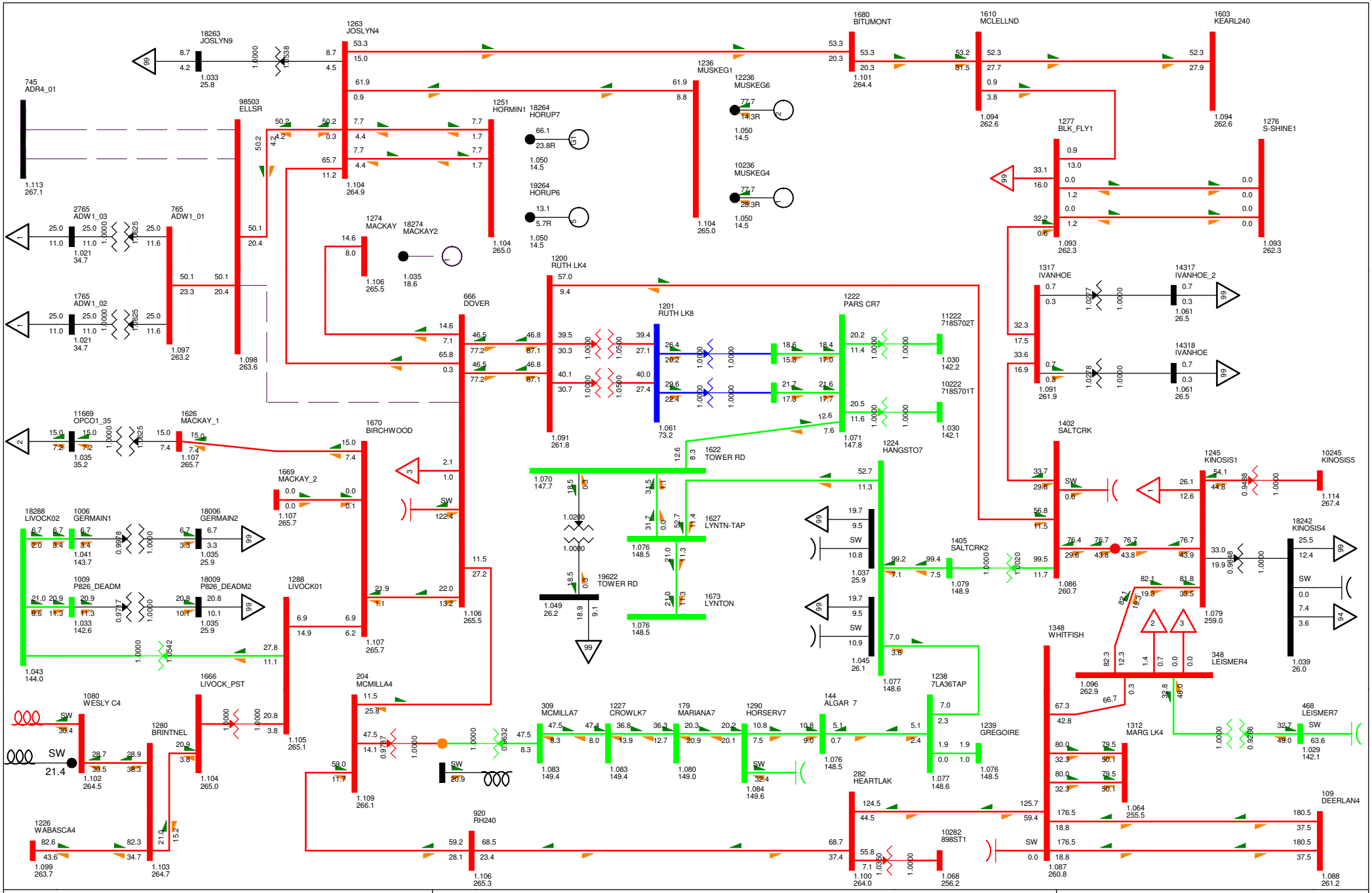
18263 JOSLYN9
1263 JOSLYN4
1680 BITUMONT
1610 MCLELLND
1603 KEARL240
745 ADR4_01
98503 ELLSR
1236 MUSKEG1
12236 MUSKEG6
10236 MUSKEG4
1251 HORMIN1
18264 HORUP7
19264 HORUP6
1277 BLK_FLY1
1276 S-SHINE1
2765 ADW1_03
765 ADW1_01
1765 ADW1_02
1274 MACKAY
18274 MACKAY2
1200 RUTH LK4
666 DOVER
1201 RUTH LK8
1222 PARS CR7
11222 718S702T
10222 718S701T
1317 IVANHOE
14317 IVANHOE_2
14318 IVANHOE
11669 OPCO1_35
1626 MACKAY_1
1670 BIRCHWOOD
1669 MACKAY_2
1622 TOWER RD
1224 HANGSTO7
1402 SALTCRK
1245 KINOSIS1
10245 KINOSIS5
18242 KINOSIS4
18288 LIVOCK02
1006 GERMAIN1
18006 GERMAIN2
1009 P826_DEADM
18009 P826_DEADM2
1288 LIVOCK01
19622 TOWER RD
1627 LYNTN-TAP
1673 LYNTON
1405 SALTCRK2
1348 WHITFISH
348 LEISMER4
1080 WESLY C4
1280 BRINTNEL
1666 LIVOCK_PST
204 MCMILLA4
309 MCMILLA7
1227 CROWLK7
179 MARIANA7
1290 HORSERV7
144 ALGAR 7
1238 7LA36TAP
1239 GREGOIRE
282 HEARTLAK
1312 MARG LK4
468 LEISMER7
1226 WABASCA4
920 RH240
109 DEERLAN4
10282 898ST1
BC - Alberta (IMPORT)769.6 MW
2012WP BASE CASE
SWINGBUS 1520 FOR FC-2009-5:2013-04-30:19:24--1--1-0-0
WED, AUG 31 2011 16:12
NW FMM STUDY
Figure E-2013SP-8
Bus - VOLTAGE (kV/PU)
Branch - MW/Mvar
Equipment - MW/Mvar
100.0%RATEB
1.120OV 0.950UV
kV: <=34.500 <=69.000 <=138.000 <=240.000 <=500.000 >500.000

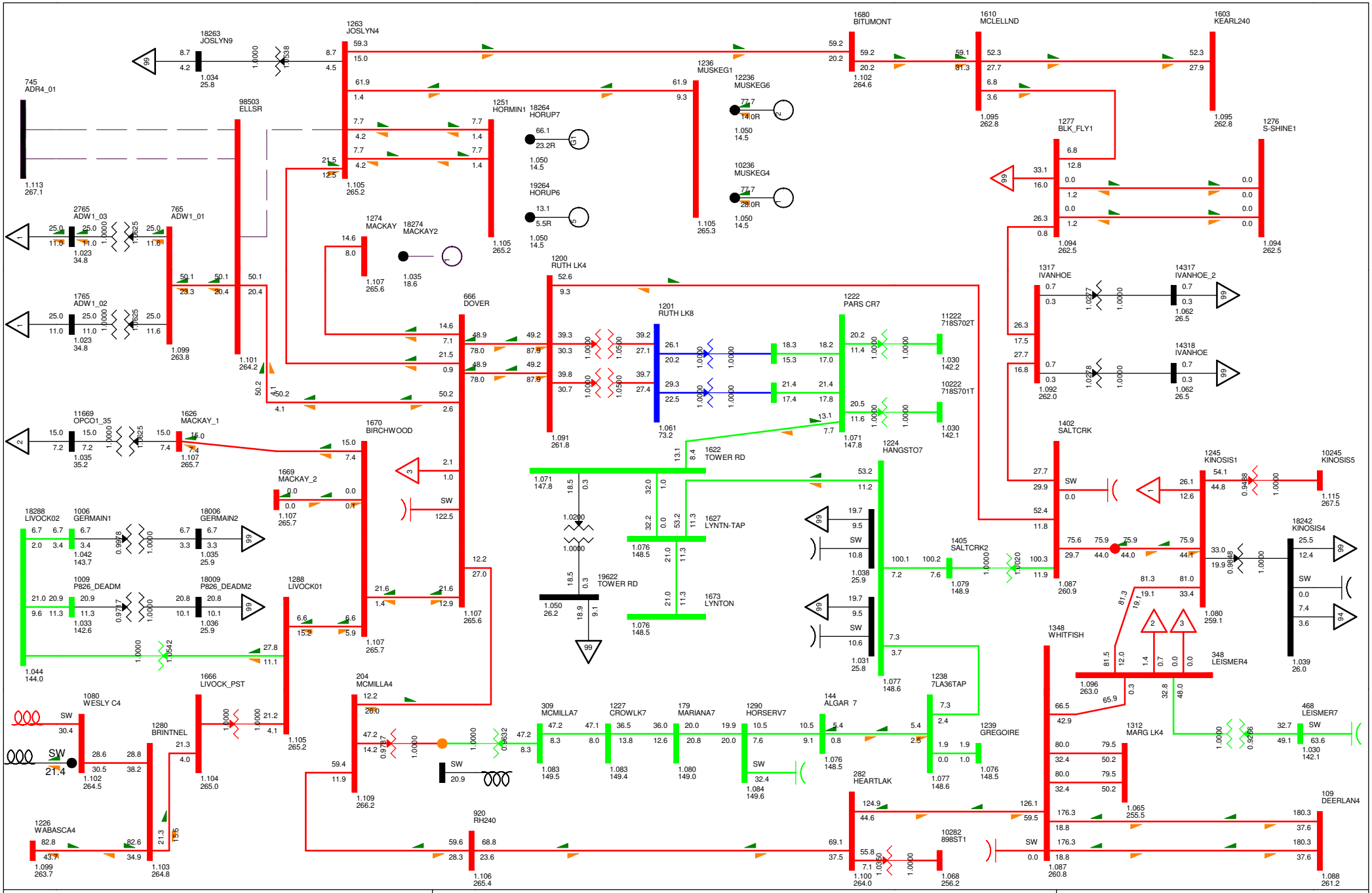
18263 JOSLYN9
1263 JOSLYN4
1680 BITUMONT
1610 MCLELLND
1603 KEARL240
745 ADR4_01
98503 ELLSR
1236 MUSKEG1
12236 MUSKEG6
10236 MUSKEG4
1251 HORMIN1
18264 HORUP7
19264 HORUP6
1277 BLK_FLY1
1276 S-SHINE1
2765 ADW1_03
765 ADW1_01
1765 ADW1_02
1274 MACKAY
18274 MACKAY2
1200 RUTH LK4
1201 RUTH LK8
666 DOVER
1222 PARS CR7
11222 718S702T
10222 718S701T
1317 IVANHOE
14317 IVANHOE_2
14318 IVANHOE
11669 OPCO1_35
1626 MACKAY_1
1670 BIRCHWOOD
1669 MACKAY_2
1622 TOWER RD
1224 HANGSTO7
1402 SALTCRK
1245 KINOSIS1
10245 KINOSIS5
18242 KINOSIS4
18288 LIVOCK02
1006 GERMAIN1
18006 GERMAIN2
1009 P826_DEADM
18009 P826_DEADM2
1288 LIVOCK01
1627 LYNTN-TAP
19622 TOWER RD
1673 LYNTON
1405 SALTCRK2
1348 WHITFISH
348 LEISMER4
1080 WESLY C4
1666 LIVOCK_PST
204 MCMILLA4
309 MCMILLA7
1227 CROWLK7
179 MARIANA7
1290 HORSERV7
144 ALGAR 7
1238 7LA36TAP
1239 GREGOIRE
468 LEISMER7
1312 MARG LK4
1280 BRINTNEL
282 HEARTLAK
109 DEERLAN4
1226 WABASCA4
920 RH240
10282 898ST1
SW
BC - Alberta (IMPORT)769.6 MW
2012WP BASE CASE
SWINGBUS 1520 FOR FC-2009-5:2013-04-30:19:24--1--1-0-0
WED, AUG 31 2011 16:12
NW FMM STUDY
Figure E-2013SP-9
Bus - VOLTAGE (kV/PU)
Branch - MW/Mvar
Equipment - MW/Mvar
100.0%RATEB
1.120OV 0.950UV
kV: <=34.500 <=69.000 <=138.000 <=240.000 <=500.000 >500.000

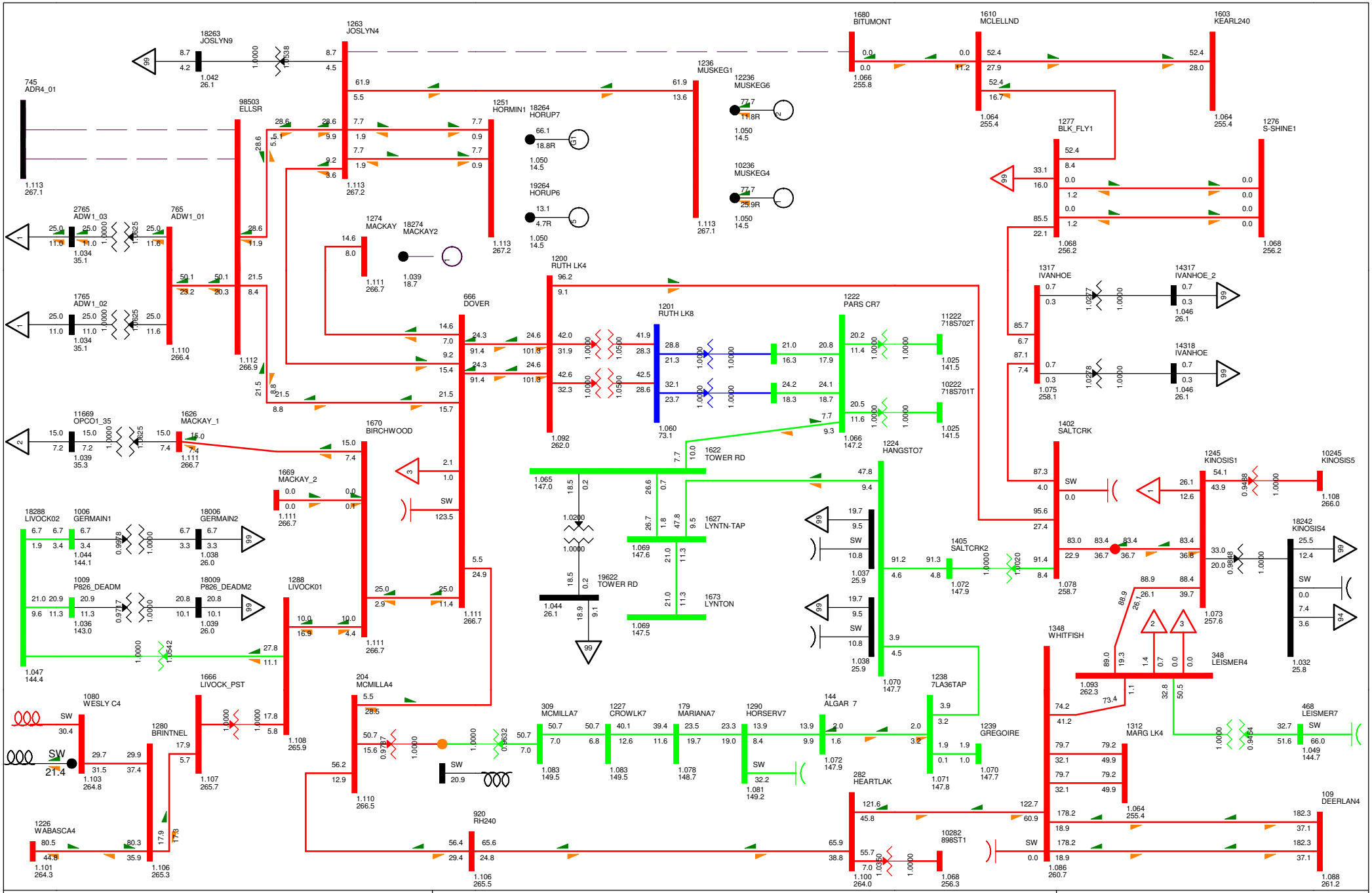

BC - Alberta (IMPORT)770.4 MW

2012WP BASE CASE
SWINGBUS 1520 FOR FC-2009-5:2013-04-30:19:24--1--1-0-0
WED, AUG 31 2011 16:12

NW FMM STUDY

Figure E-2013SP-10

Bus - VOLTAGE (kV/PU)
Branch - MW/Mvar
Equipment - MW/Mvar
100.0%RATEB
1.120OV 0.950UV
kV: <=34.500 <=69.000 <=138.000 <=240.000 <=500.000 >500.000

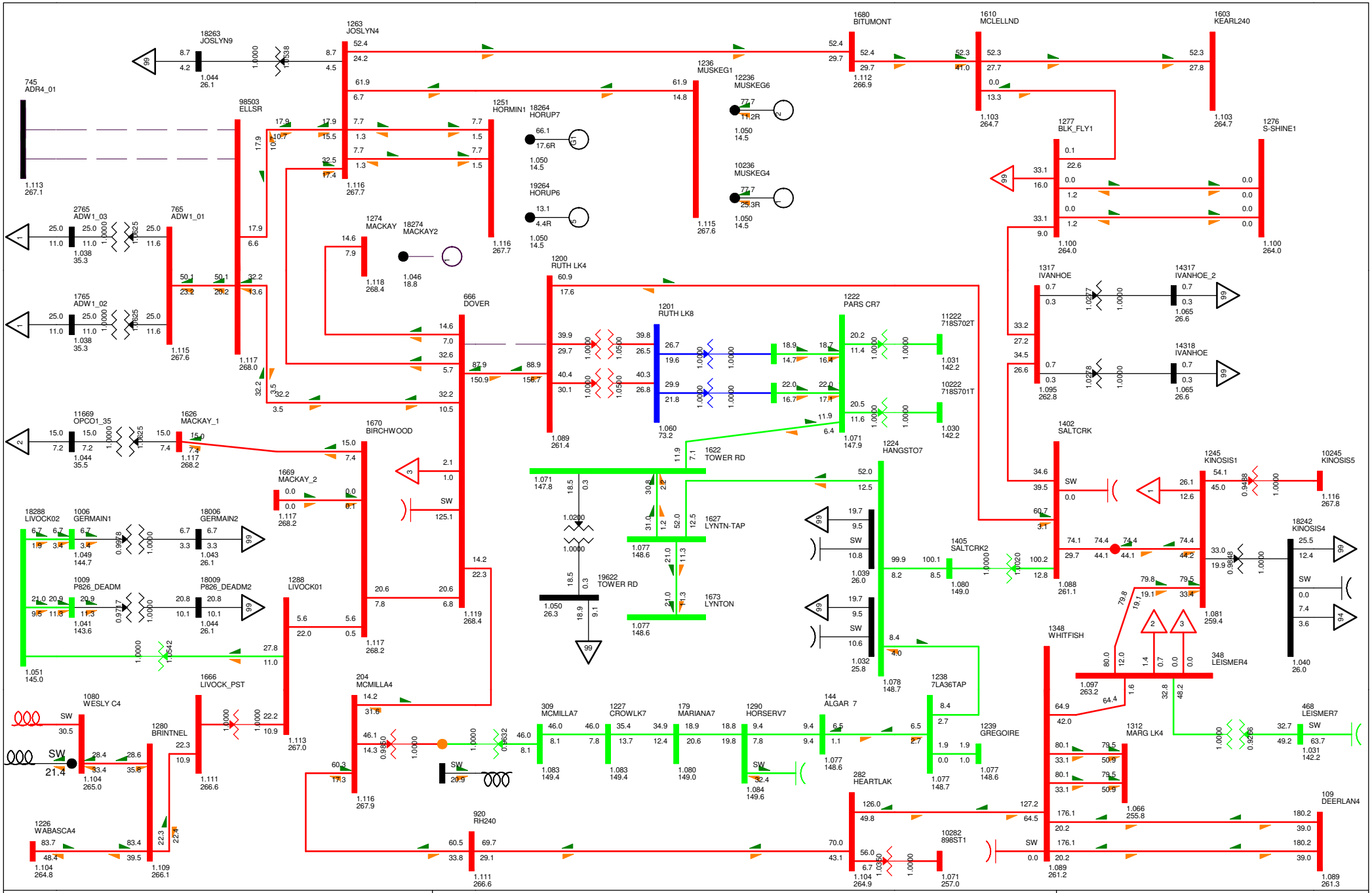

BC - Alberta (IMPORT)770.0 MW

2012WP BASE CASE
SWINGBUS 1520 FOR FC-2009-5:2013-04-30:19:24--1--1-0-0
WED, AUG 31 2011 16:12

NW FMM STUDY

Figure E-2013SP-11

Bus - VOLTAGE (kV/PU)
Branch - MW/Mvar
Equipment - MW/Mvar
100.0%RATEB
1.120OV 0.950UV
kV: <=34.500 <=69.000 <=138.000 <=240.000 <=500.000 >500.000

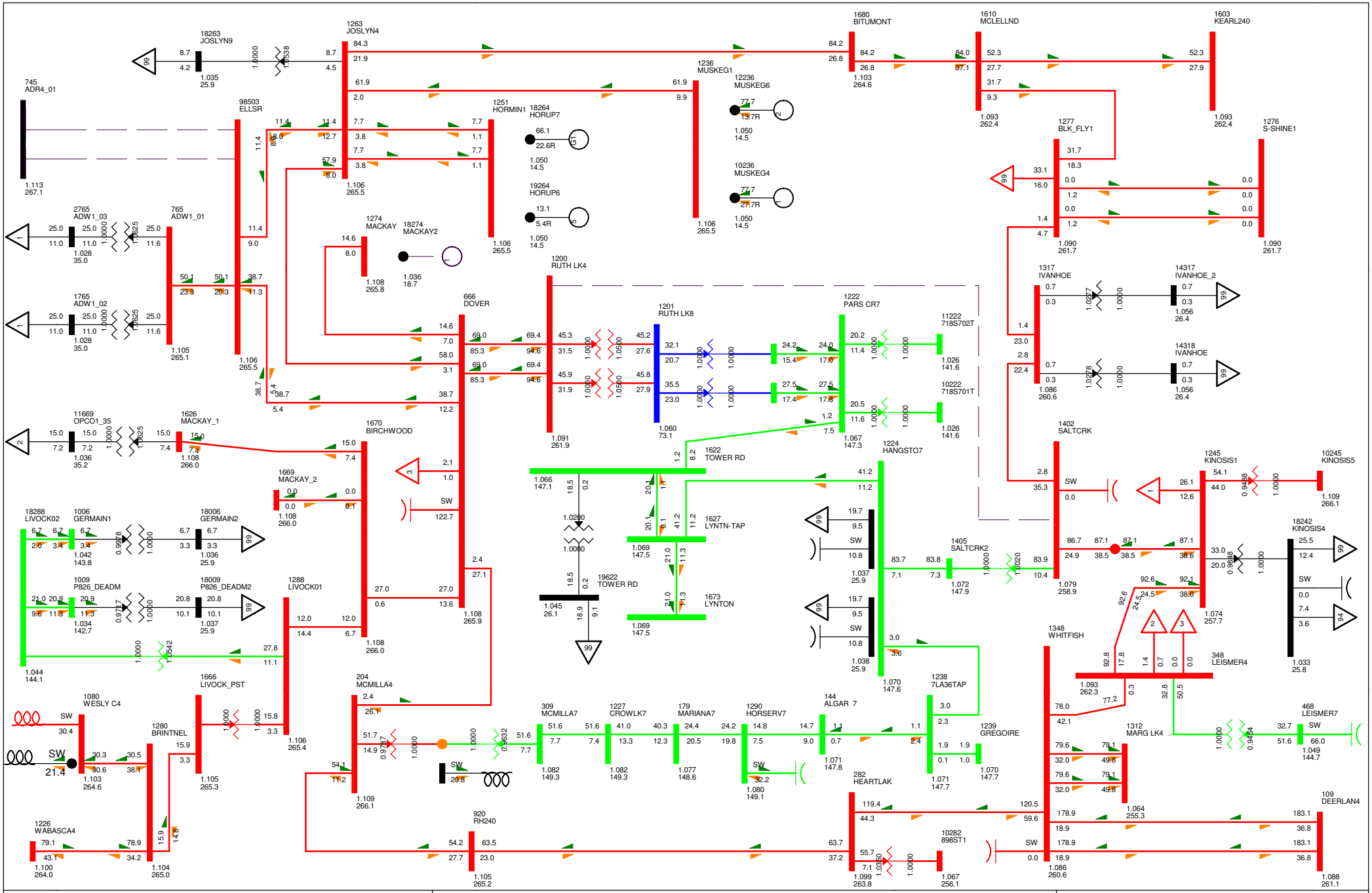
18263 JOSLYN9
1263 JOSLYN4
1680 BITUMONT
1610 MCLELLND
1603 KEARL240
745 ADR4_01
98503 ELLSR
1236 MUSKEG1
12236 MUSKEG6
10236 MUSKEG4
1251 HORMIN1
18264 HORUP7
19264 HORUP6
1277 BLK_FLY1
1276 S-SHINE1
2765 ADW1_03
765 ADW1_01
1765 ADW1_02
1274 MACKAY
18274 MACKAY2
1200 RUTH LK4
666 DOVER
1201 RUTH LK8
1222 PARS CR7
11222 718S702T
10222 718S701T
1317 IVANHOE
14317 IVANHOE_2
14318 IVANHOE
11669 OPCO1_35
1626 MACKAY_1
1670 BIRCHWOOD
1669 MACKAY_2
1622 TOWER RD
1224 HANGSTO7
1402 SALTCRK
1245 KINOSIS1
10245 KINOSIS5
18288 LIVOCK02
1006 GERMAIN1
18006 GERMAIN2
1627 LYNTN-TAP
1405 SALTCRK2
18242 KINOSIS4
1009 P826_DEADM
18009 P826_DEADM2
19622 TOWER RD
1673 LYNTON
1288 LIVOCK01
1348 WHITFISH
348 LEISMER4
1044 144.1
1080 WESLY C4
1666 LIVOCK_PST
204 MCMILLA4
309 MCMILLA7
1227 CROWLK7
179 MARIANA7
1290 HORSERV7
144 ALGAR 7
1238 7LA36TAP
1239 GREGOIRE
1312 MARG LK4
468 LEISMER7
1280 BRINTNEL
282 HEARTLAK
109 DEERLAN4
1226 WABASCA4
920 RH240
10282 898ST1
BC - Alberta (IMPORT)770.0 MW
2012WP BASE CASE
SWINGBUS 1520 FOR FC-2009-5:2013-04-30:19:24--1--1-0-0
WED, AUG 31 2011 16:12
NW FMM STUDY
Figure E-2013SP-12
Bus - VOLTAGE (kV/PU)
Branch - MW/Mvar
Equipment - MW/Mvar
100.0%RATEB
1.120OV 0.950UV
kV: <=34.500 <=69.000 <=138.000 <=240.000 <=500.000 >500.000

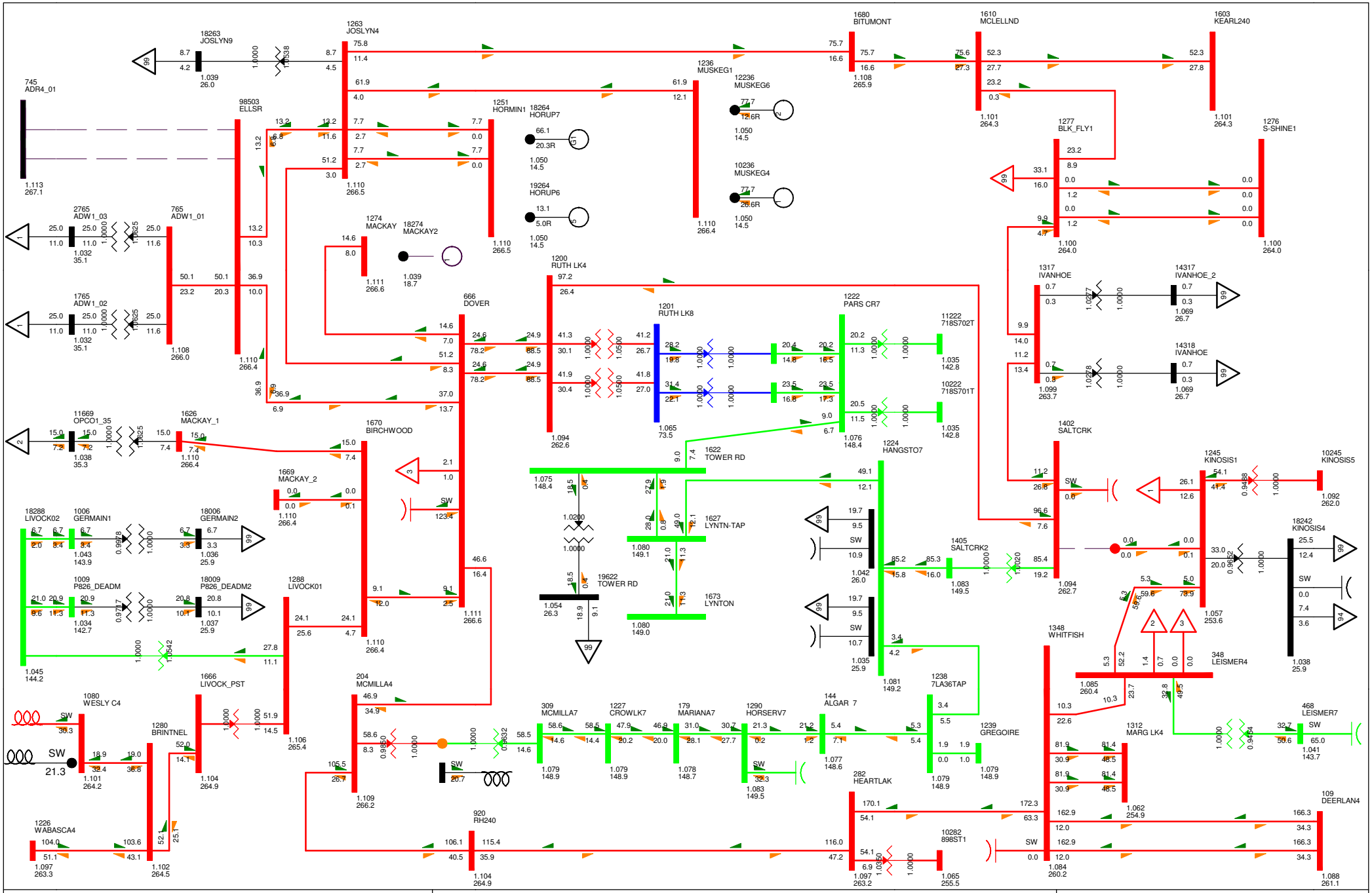
18263 JOSLYN9
1263 JOSLYN4
1680 BITUMONT
1610 MCLELLND
1603 KEARL240
745 ADR4_01
98503 ELLSR
1236 MUSKEG1
12236 MUSKEG6
10236 MUSKEG4
1251 HORMIN1
18264 HORUP7
19264 HORUP6
1277 BLK_FLY1
1276 S-SHINE1
2765 ADW1_03
765 ADW1_01
1765 ADW1_02
1274 MACKAY
18274 MACKAY2
1200 RUTH LK4
1201 RUTH LK8
666 DOVER
1222 PARS CR7
11222 718S702T
10222 718S701T
1317 IVANHOE
14317 IVANHOE_2
14318 IVANHOE
11669 OPCO1_35
1626 MACKAY_1
1670 BIRCHWOOD
1669 MACKAY_2
1622 TOWER RD
1224 HANGSTO7
1402 SALTCRK
1245 KINOSIS1
10245 KINOSIS5
18242 KINOSIS4
18288 LIVOCK02
1006 GERMAIN1
18006 GERMAIN2
1009 P826_DEADM
18009 P826_DEADM2
1627 LYNTN-TAP
19622 TOWER RD
1673 LYNTON
1405 SALTCRK2
1348 WHITFISH
348 LEISMER4
1238 7LA36TAP
1239 GREGOIRE
1288 LIVOCK01
204 MCMILLA4
309 MCMILLA7
1227 CROWLK7
179 MARIANA7
1290 HORSERV7
144 ALGAR 7
1312 MARG LK4
468 LEISMER7
1080 WESLY C4
1280 BRINTNEL
1666 LIVOCK_PST
282 HEARTLAK
109 DEERLAN4
1226 WABASCA4
920 RH240
10282 898ST1
SW
21.3
BC - Alberta (IMPORT)773.8 MW
2012WP BASE CASE
SWINGBUS 1520 FOR FC-2009-5:2013-04-30:19:24--1--1-0-0
WED, AUG 31 2011 16:12
NW FMM STUDY
Figure E-2013SP-13
Bus - VOLTAGE (kV/PU)
Branch - MW/Mvar
Equipment - MW/Mvar
100.0%RATEB
1.120OV 0.950UV
kV: <=34.500 <=69.000 <=138.000 <=240.000 <=500.000 >500.000

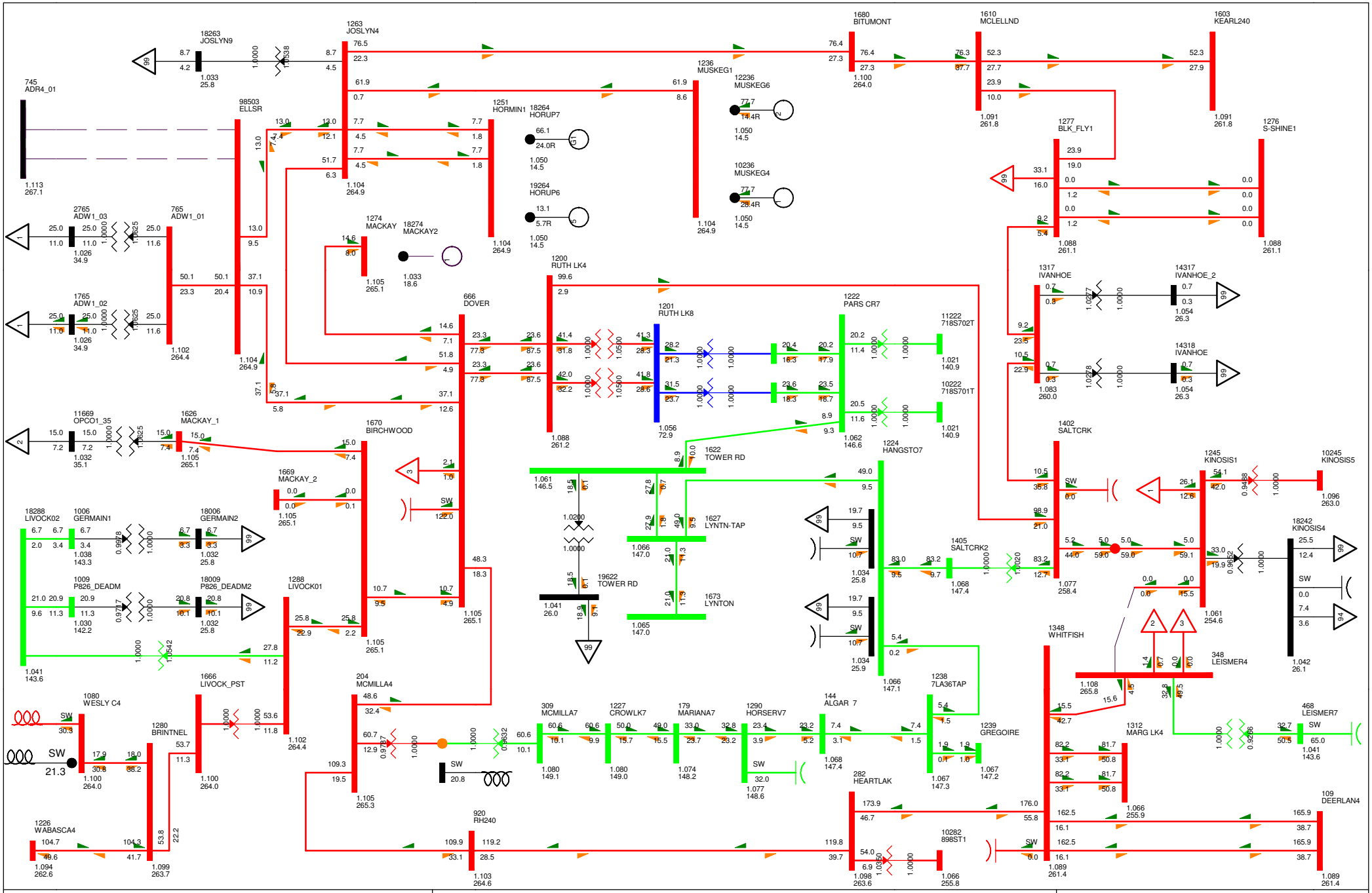

BC - Alberta (IMPORT)774.2 MW

2012WP BASE CASE
SWINGBUS 1520 FOR FC-2009-5:2013-04-30:19:24--1--1-0-0
WED, AUG 31 2011 16:12

NW FMM STUDY

Figure E-2013SP-14

Bus - VOLTAGE (kV/PU)
Branch - MW/Mvar
Equipment - MW/Mvar
100.0%RATEB
1.120OV 0.950UV
kV: <=34.500 <=69.000 <=138.000 <=240.000 <=500.000 >500.000

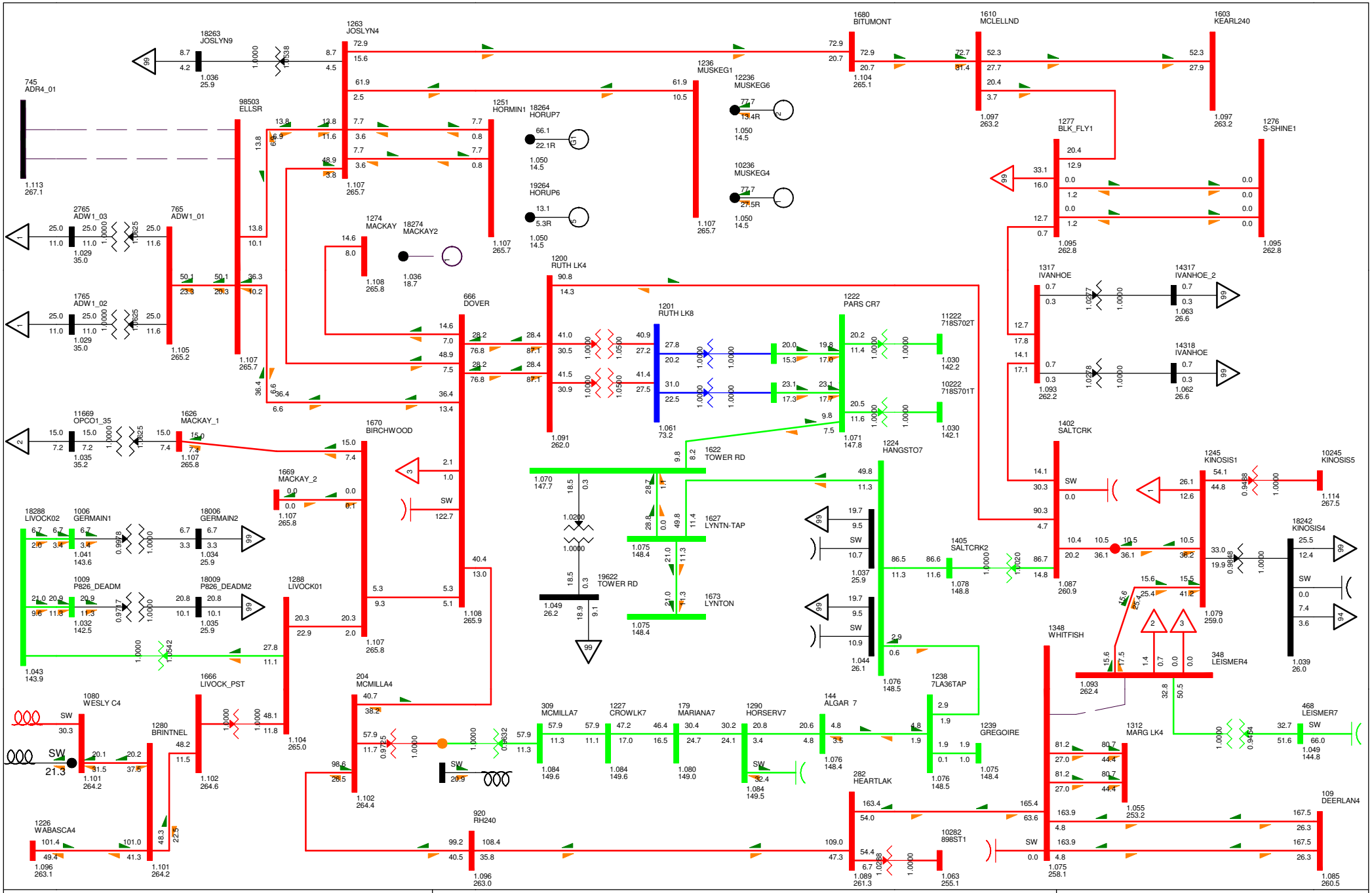

BC - Alberta (IMPORT)772.8 MW

2012WP BASE CASE
SWINGBUS 1520 FOR FC-2009-5:2013-04-30:19:24--1--1-0-0
WED, AUG 31 2011 16:12

NW FMM STUDY

Figure E-2013SP-15

Bus - VOLTAGE (kV/PU)
Branch - MW/Mvar
Equipment - MW/Mvar
100.0%RATEB
1.120OV 0.950UV
kV: <=34.500 <=69.000 <=138.000 <=240.000 <=500.000 >500.000

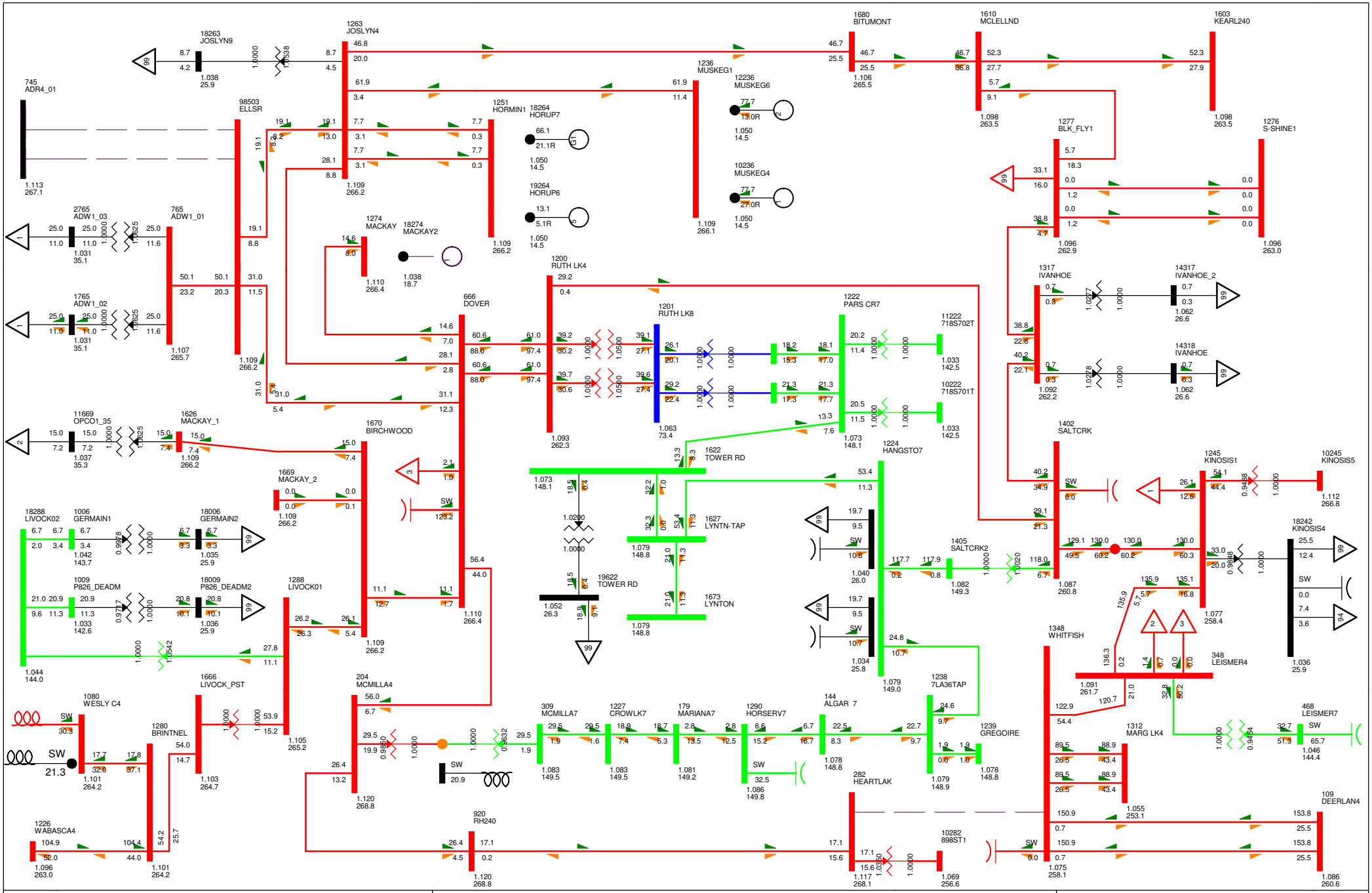

BC - Alberta (IMPORT)780.9 MW

2012WP BASE CASE
SWINGBUS 1520 FOR FC-2009-5:2013-04-30:19:24--1--1-0-0
WED, AUG 31 2011 16:12

NW FMM STUDY

Figure E-2013SP-16

Bus - VOLTAGE (kV/PU)
Branch - MW/Mvar
Equipment - MW/Mvar
100.0%RATEB
1.120OV 0.950UV
kV: <=34.500 <=69.000 <=138.000 <=240.000 <=500.000 >500.000

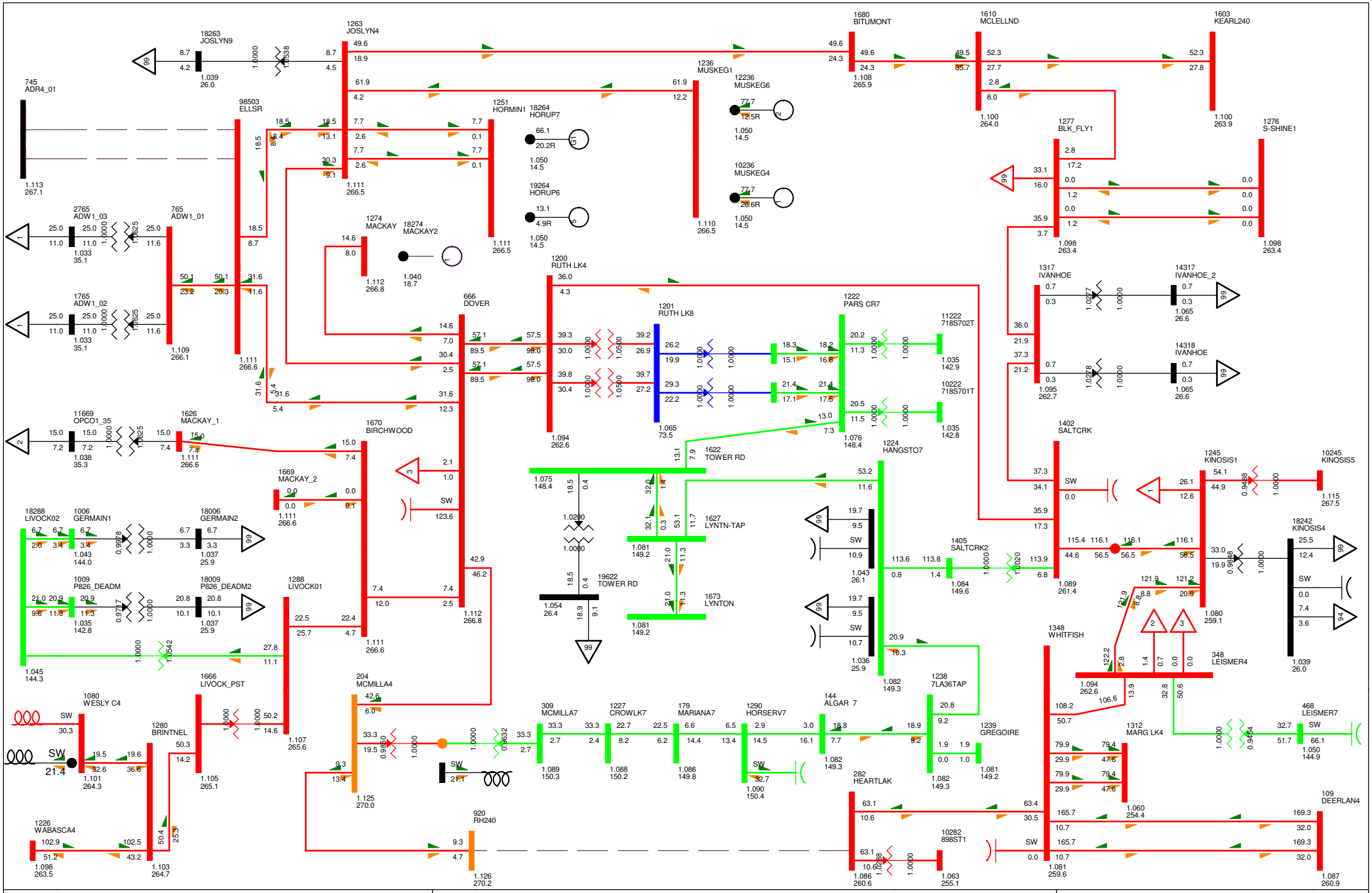
18263 JOSLYN9
1263 JOSLYN4
1680 BITUMONT
1610 MCLELLND
1603 KEARL240
745 ADR4_01
98503 ELLSR
1236 MUSKEG1
12236 MUSKEG6
10236 MUSKEG4
1251 HORMIN1
18264 HORUP7
19264 HORUP6
1277 BLK_FLY1
1276 S-SHINE1
2765 ADW1_03
765 ADW1_01
1765 ADW1_02
1274 MACKAY
18274 MACKAY2
1200 RUTH LK4
666 DOVER
1201 RUTH LK8
1222 PARS CR7
11222 718S702T
10222 718S701T
1317 IVANHOE
14317 IVANHOE_2
14318 IVANHOE
11669 OPCO1_35
1626 MACKAY_1
1670 BIRCHWOOD
1669 MACKAY_2
1622 TOWER RD
1224 HANGSTO7
1402 SALTCRK
1245 KINOSIS1
10245 KINOSIS5
18288 LIVOCK02
1006 GERMAIN1
18006 GERMAIN2
1009 P826_DEADM
18009 P826_DEADM2
1288 LIVOCK01
19622 TOWER RD
1627 LYNTN-TAP
1673 LYNTON
1405 SALTCRK2
1348 WHITFISH
348 LEISMER4
18242 KINOSIS4
1080 WESLY C4
1666 LIVOCK_PST
204 MCMILLA4
309 MCMILLA7
1227 CROWLK7
179 MARIANA7
1290 HORSERV7
144 ALGAR 7
1238 7LA36TAP
1239 GREGOIRE
1280 BRINTNEL
282 HEARTLAK
1312 MARG LK4
468 LEISMER7
1226 WABASCA4
920 RH240
109 DEERLAN4
10282 898ST1
BC - Alberta (IMPORT)771.8 MW
2012WP BASE CASE
SWINGBUS 1520 FOR FC-2009-5:2013-04-30:19:24--1--1-0-0
WED, AUG 31 2011 16:12
NW FMM STUDY
Figure E-2013SP-17
Bus - VOLTAGE (kV/PU)
Branch - MW/Mvar
Equipment - MW/Mvar
100.0%RATEB
1.120OV 0.950UV
kV: <=34.500 <=69.000 <=138.000 <=240.000 <=500.000 >500.000

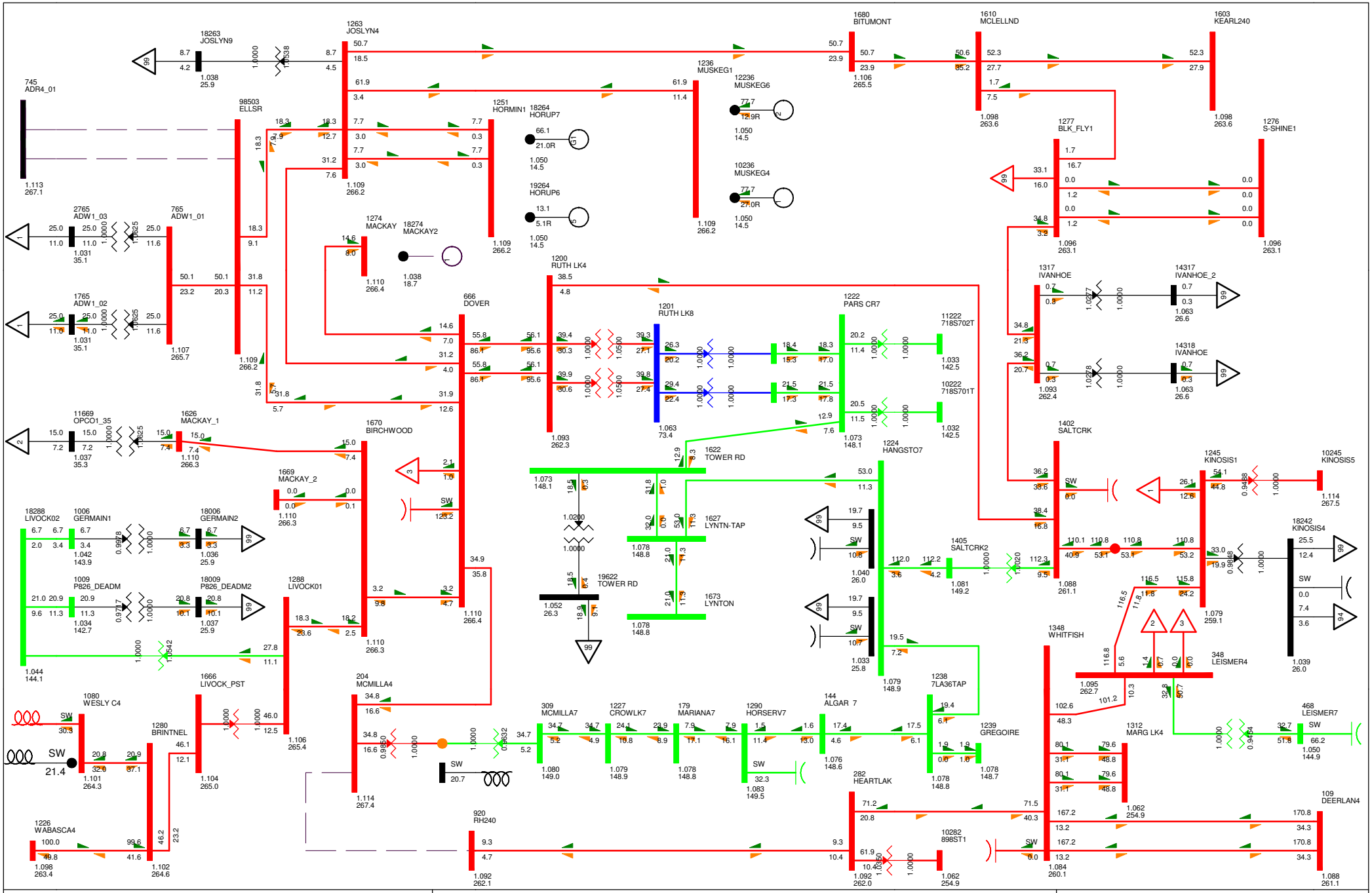
1263 JOSLYN4
18263 JOSLYN9
1680 BITUMONT
1610 MCLELLND
1603 KEARL240
1236 MUSKEG1
12236 MUSKEG6
10236 MUSKEG4
745 ADR4_01
98503 ELLSR
1251 HORMIN1
18264 HORUP7
19264 HORUP6
1277 BLK_FLY1
1276 S-SHINE1
2765 ADW1_03
765 ADW1_01
1765 ADW1_02
1274 MACKAY
18274 MACKAY2
1200 RUTH LK4
1201 RUTH LK8
666 DOVER
1222 PARS CR7
11222 718S702T
10222 718S701T
1317 IVANHOE
14317 IVANHOE_2
14318 IVANHOE
11669 OPCO1_35
1626 MACKAY_1
1670 BIRCHWOOD
1669 MACKAY_2
1622 TOWER RD
1224 HANGSTO7
1402 SALTCRK
1245 KINOSIS1
10245 KINOSIS5
18288 LIVOCK02
1006 GERMAIN1
18006 GERMAIN2
1009 P826_DEADM
18009 P826_DEADM2
1288 LIVOCK01
19622 TOWER RD
1627 LYNTN-TAP
1673 LYNTON
1405 SALTCRK2
18242 KINOSIS4
1348 WHITFISH
348 LEISMER4
1080 WESLY C4
1666 LIVOCK_PST
204 MCMILLA4
1280 BRINTNEL
309 MCMILLA7
1227 CROWLK7
179 MARIANA7
1290 HORSERV7
144 ALGAR 7
1238 7LA36TAP
1239 GREGOIRE
282 HEARTLAK
1312 MARG LK4
468 LEISMER7
1226 WABASCA4
920 RH240
10282 898ST1
109 DEERLAN4
BC - Alberta (IMPORT)771.1 MW
2012WP BASE CASE
SWINGBUS 1520 FOR FC-2009-5:2013-04-30:19:24--1--1-0-0
WED, AUG 31 2011 16:12
NW FMM STUDY
Figure E-2013SP-18
Bus - VOLTAGE (kV/PU)
Branch - MW/Mvar
Equipment - MW/Mvar
100.0%RATEB
1.120OV 0.950UV
kV: <=34.500 <=69.000 <=138.000 <=240.000 <=500.000 >500.000

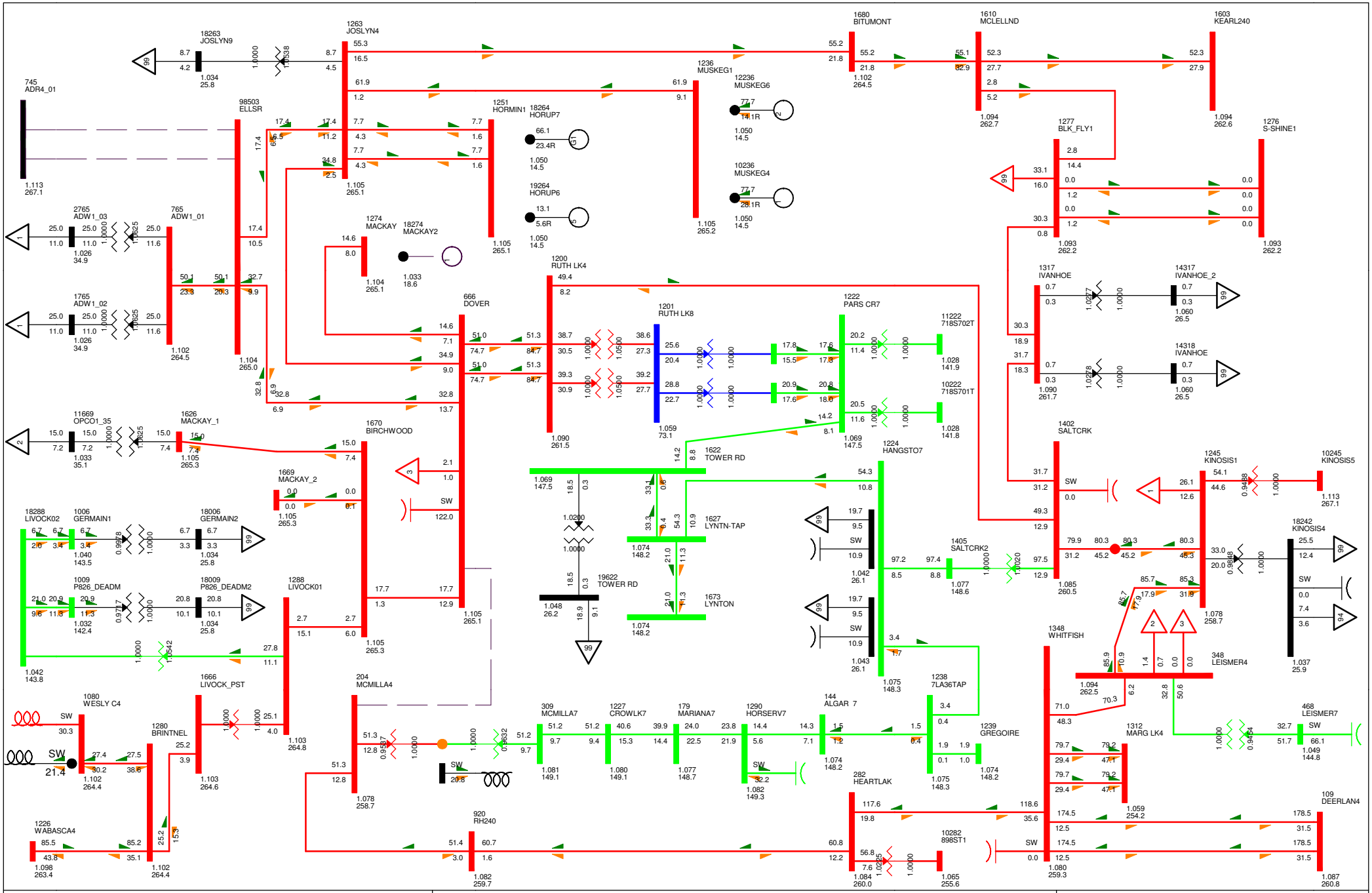

BC - Alberta (IMPORT)769.6 MW

2012WP BASE CASE
SWINGBUS 1520 FOR FC-2009-5:2013-04-30:19:24--1--1-0-0
WED, AUG 31 2011 16:12

NW FMM STUDY

Figure E-2013SP-19

Bus - VOLTAGE (kV/PU)
Branch - MW/Mvar
Equipment - MW/Mvar
100.0%RATEB
1.120OV 0.950UV
kV: <=34.500 <=69.000 <=138.000 <=240.000 <=500.000 >500.000

Table E-2 Power Flow Analysis Summary- 2013 Winter Peak with NW FMM

Figure Number	Contingency	Thermal Violation	Voltage Violation
Figure E-2013WP-1	Base Case (N - 0)	None	None
Figure E-2013WP-2	Open 9L56 240kV line (WABASCA 720S to Brintnell 876S)	None	None
Figure E-2013WP-3	Open 9L15 240kV line (WESLEYCREEK 834S to Brintnell 876S	None	None
Figure E-2013WP-4	Open 9L10 240kV line (Brintnell 876S to Livock 939S)	None	None
Figure E-2013WP-5	Open 9L57 240kV line (Livock 939S to Birchwood Creek 960S)	None	None
Figure E-2013WP-6	Open 9L74 240kV line (Birchwood Creek 960S to Dover 888S)	None	None
Figure E-2013WP-7	Open 9L09 240kV line (Dover 888S to Joslyn Creek 849S)	None	None
Figure E-2013WP-8	Open a 240kV line (FWFMM to to Dover 888S)	None	None
Figure E-2013WP-9	Open a 240kV line (FWFMM to to Joslyn Creek 849S)	None	None
Figure E-2013WP-10	Open 9L32 240kV line (Joslyn Creek 849S to Bitumont 941S)	None	None
Figure E-2013WP-11	Open 9L01 240kV line (Dover 888S to Ruth Lake 848S)	None	None
Figure E-2013WP-12	Open 9L23 240kV line (Ruth Lake 848S to Salt Creek 977S)	None	None
Figure E-2013WP-13	Open 9L990 240kV line (Salt Creek 977S to Kinosis 856S)	None	None
Figure E-2013WP-14	Open 9L990 240kV line (Kinosis 856S to Leismer 72S)	None	None
Figure E-2013WP-15	Open 9L930 240kV line (Leismer 72S to Whitefish Lake 825S)	None	None
Figure E-2013WP-16	Open 9L22 240kV line (Whitefish Lake 825S to Heart Lake 898S)	None	None
Figure E-2013WP-17	Open 9L55 240kV line (Heart Lake 898S to RoundHill POD)	None	None
Figure E-2013WP-18	Open 9L55 240kV line (RoundHill POD to McMillan 885S)	None	None
Figure E-2013WP-19	Open 9L07 240kV line (McMillan 885S TO Dover 888S)	None	None

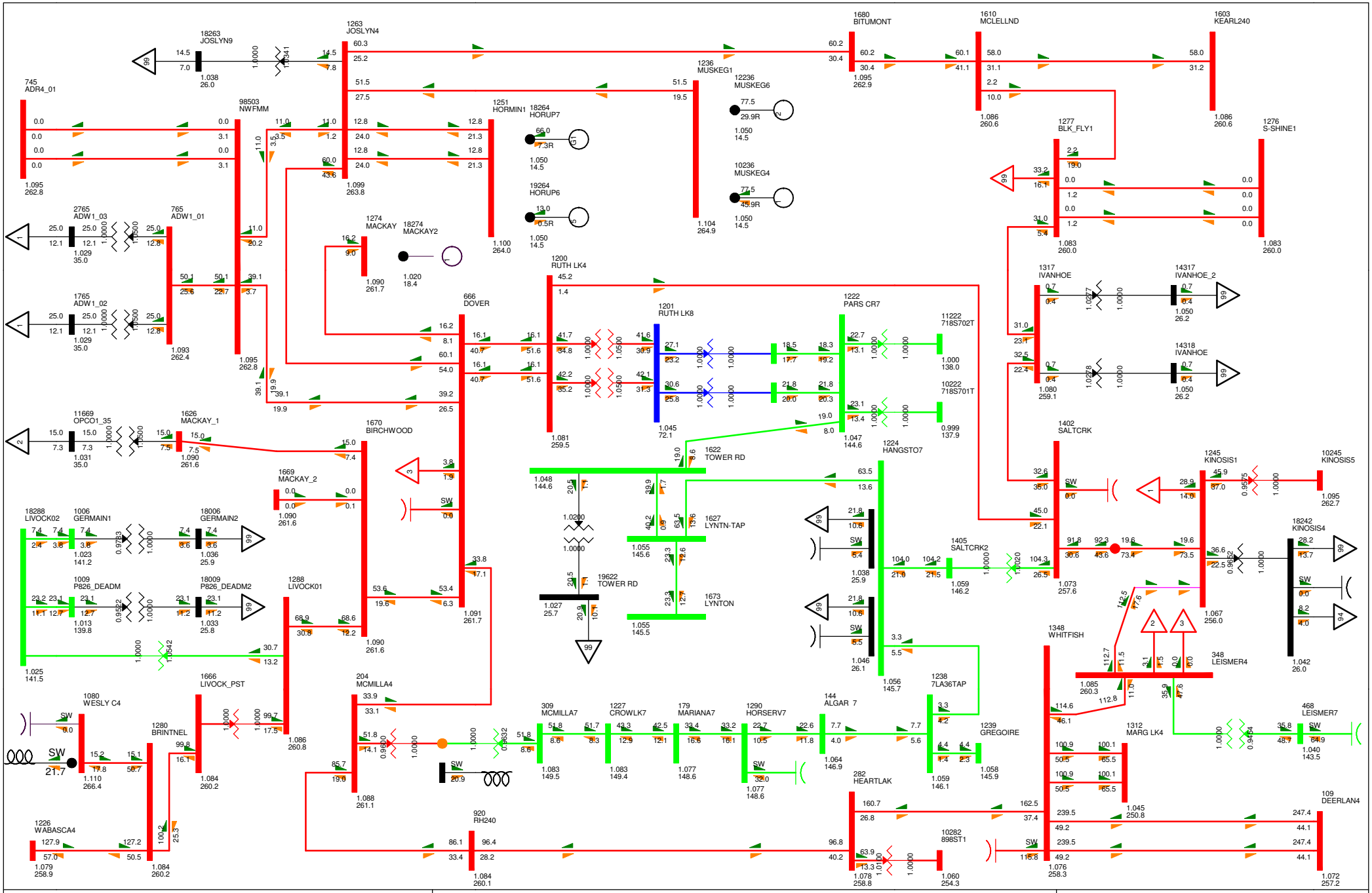

BC - Alberta (IMPORT)786.4 MW

2012WP BASE CASE
SWINGBUS 1520 FOR FC-2009-5:2013-04-30:19:24--1--1-0-0
MON, AUG 15 2011 15:30

NW FMM STUDY

Figure E-2013WP-1

Bus - VOLTAGE (kV/PU)
Branch - MW/Mvar
Equipment - MW/Mvar
100.0%RATEB
1.120OV 0.950UV
kV: <=34.500 <=69.000 <=138.000 <=240.000 <=500.000 >500.000

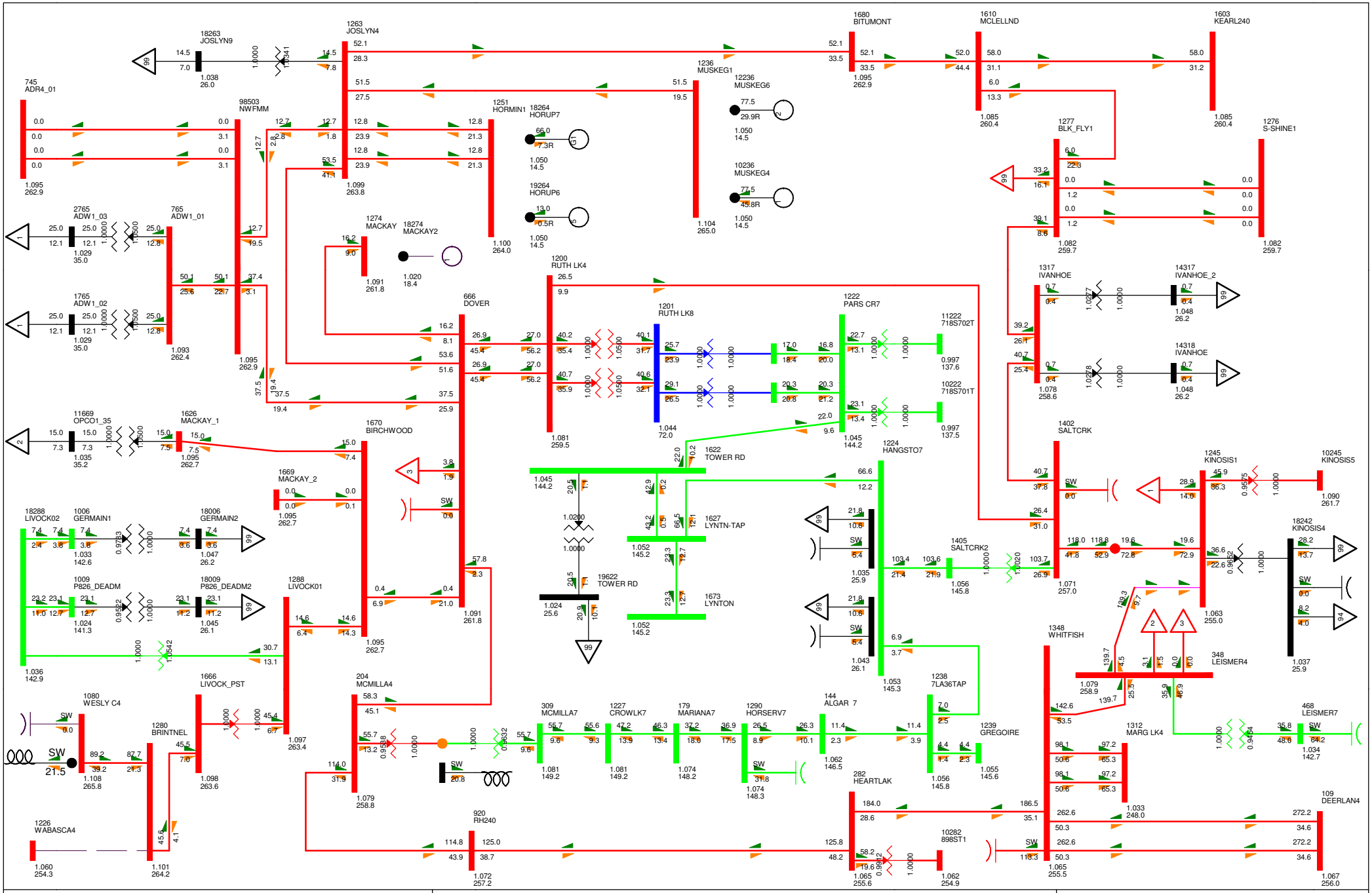

BC - Alberta (IMPORT)798.0 MW

2012WP BASE CASE
SWINGBUS 1520 FOR FC-2009-5:2013-04-30:19:24--1--1-0-0
MON, AUG 15 2011 15:30

NW FMM STUDY

Figure E-2013WP-2

Bus - VOLTAGE (kV/PU)
Branch - MW/Mvar
Equipment - MW/Mvar
100.0%RATEB
1.120OV 0.950UV
kV: <=34.500 <=69.000 <=138.000 <=240.000 <=500.000 >500.000

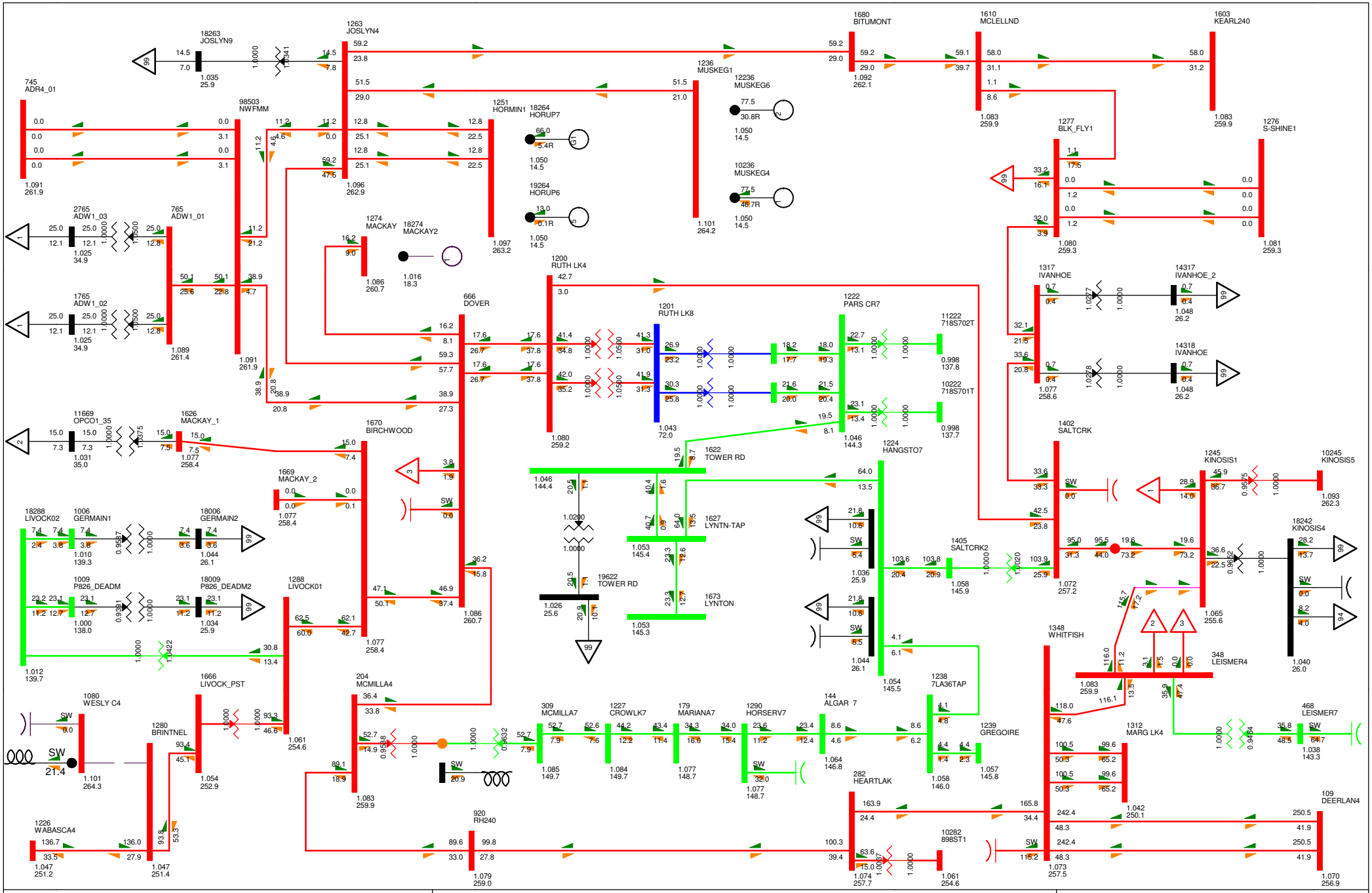

BC - Alberta (IMPORT)787.3 MW

2012WP BASE CASE
SWINGBUS 1520 FOR FC-2009-5:2013-04-30:19:24--1--1-0-0
MON, AUG 15 2011 15:30

NW FMM STUDY

Figure E-2013WP-3

Bus - VOLTAGE (kV/PU)
Branch - MW/Mvar
Equipment - MW/Mvar
100.0%RATEB
1.120OV 0.950UV
kV: <=34.500 <=69.000 <=138.000 <=240.000 <=500.000 >500.000

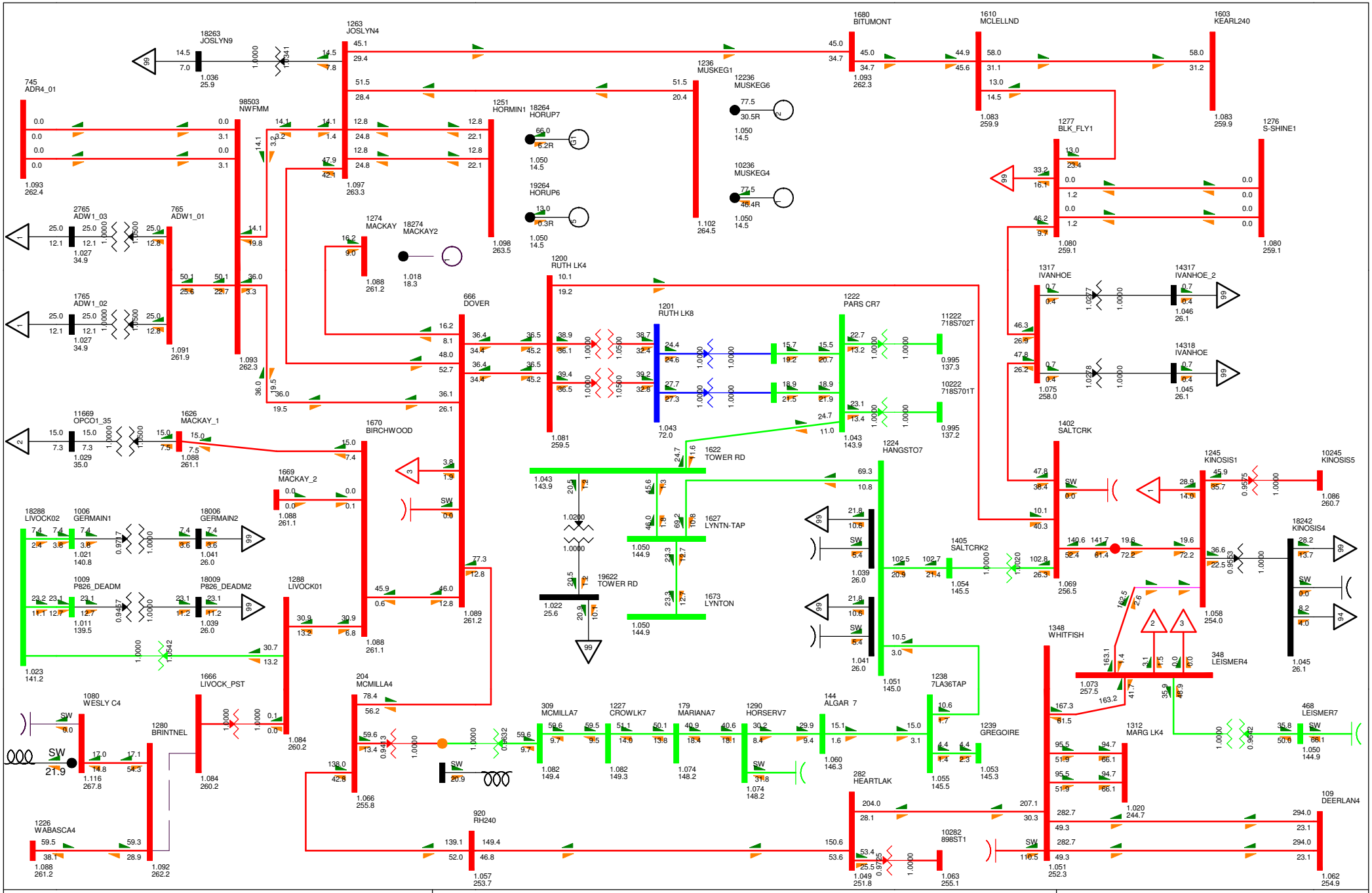
18263 JOSLYN9
1263 JOSLYN4
1680 BITUMONT
1610 MCLELLND
1603 KEARL240
745 ADR4_01
98503 NWFMM
1236 MUSKEG1
12236 MUSKEG6
10236 MUSKEG4
1251 HORMIN1
18264 HORUP7
19264 HORUP6
1277 BLK_FLY1
1276 S-SHINE1
2765 ADW1_03
765 ADW1_01
1765 ADW1_02
1274 MACKAY
18274 MACKAY2
1200 RUTH LK4
666 DOVER
1201 RUTH LK8
1222 PARS CR7
11222 718S702T
10222 718S701T
1224 HANGSTO7
1317 IVANHOE
14317 IVANHOE_2
14318 IVANHOE
1402 SALTCRK
11669 OPCO1_35
1626 MACKAY_1
1670 BIRCHWOOD
1669 MACKAY_2
1622 TOWER RD
19622 TOWER RD
1627 LYNTN-TAP
1673 LYNTON
1405 SALTCRK2
1245 KINOSIS1
10245 KINOSIS5
18242 KINOSIS4
18288 LIVOCK02
1006 GERMAIN1
18006 GERMAIN2
1009 P826_DEADM
18009 P826_DEADM2
1288 LIVOCK01
1666 LIVOCK_PST
1080 WESLY C4
1280 BRINTNEL
204 MCMILLA4
309 MCMILLA7
1227 CROWLK7
179 MARIANA7
1290 HORSERV7
144 ALGAR 7
1238 7LA36TAP
1239 GREGOIRE
1348 WHITFISH
348 LEISMER4
468 LEISMER7
1312 MARG LK4
109 DEERLAN4
282 HEARTLAK
10282 898ST1
920 RH240
1226 WABASCA4
1084 260.2
1066 255.8
1088 261.2
1092 262.2
1057 253.7
1063 255.1
1062 254.9
1051 252.3
1049 251.8
1053 145.3
1055 145.5
1060 146.3
1074 148.2
1082 149.3
1082 149.4
1098 263.5
1102 264.5
1097 263.3
1093 262.4
1091 261.9
1081 259.5
1043 143.9
1043 72.0
1050 144.9
1039 26.0
1054 145.5
1051 145.0
1041 26.0
1058 254.0
1069 256.5
1086 260.7
1045 26.1
1046 26.1
1080 259.1
1083 259.9
1050 144.9
1020 244.7
1075 258.0
1073 257.5
1060 146.3
1116 267.8
1092 262.2
1088 261

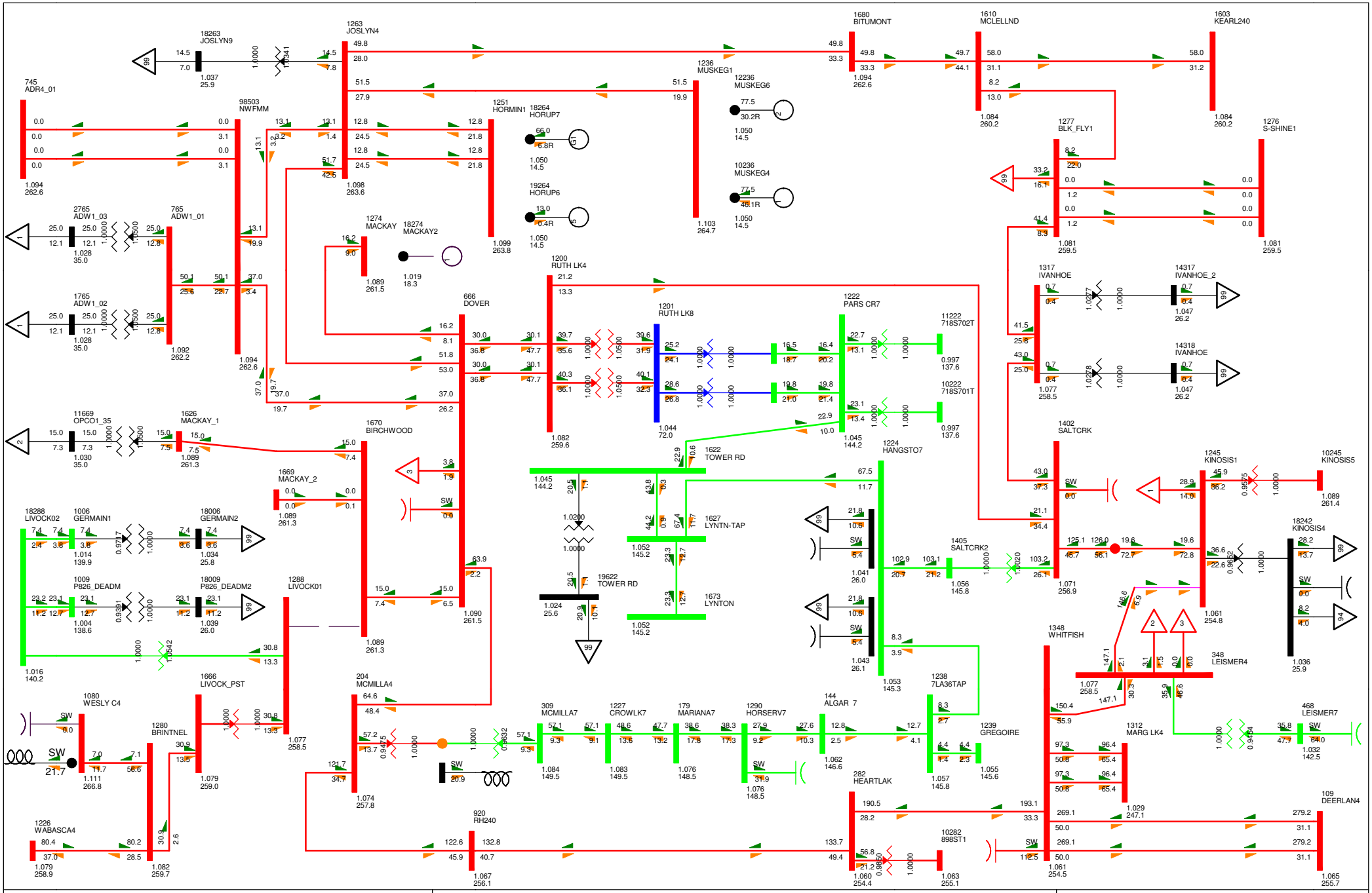

BC - Alberta (IMPORT)792.0 MW

2012WP BASE CASE
SWINGBUS 1520 FOR FC-2009-5:2013-04-30:19:24--1--1-0-0
MON, AUG 15 2011 15:30

NW FMM STUDY

Figure E-2013WP-5

Bus - VOLTAGE (kV/PU)
Branch - MW/Mvar
Equipment - MW/Mvar
100.0%RATEB
1.120OV 0.950UV
kV: <=34.500 <=69.000 <=138.000 <=240.000 <=500.000 >500.000

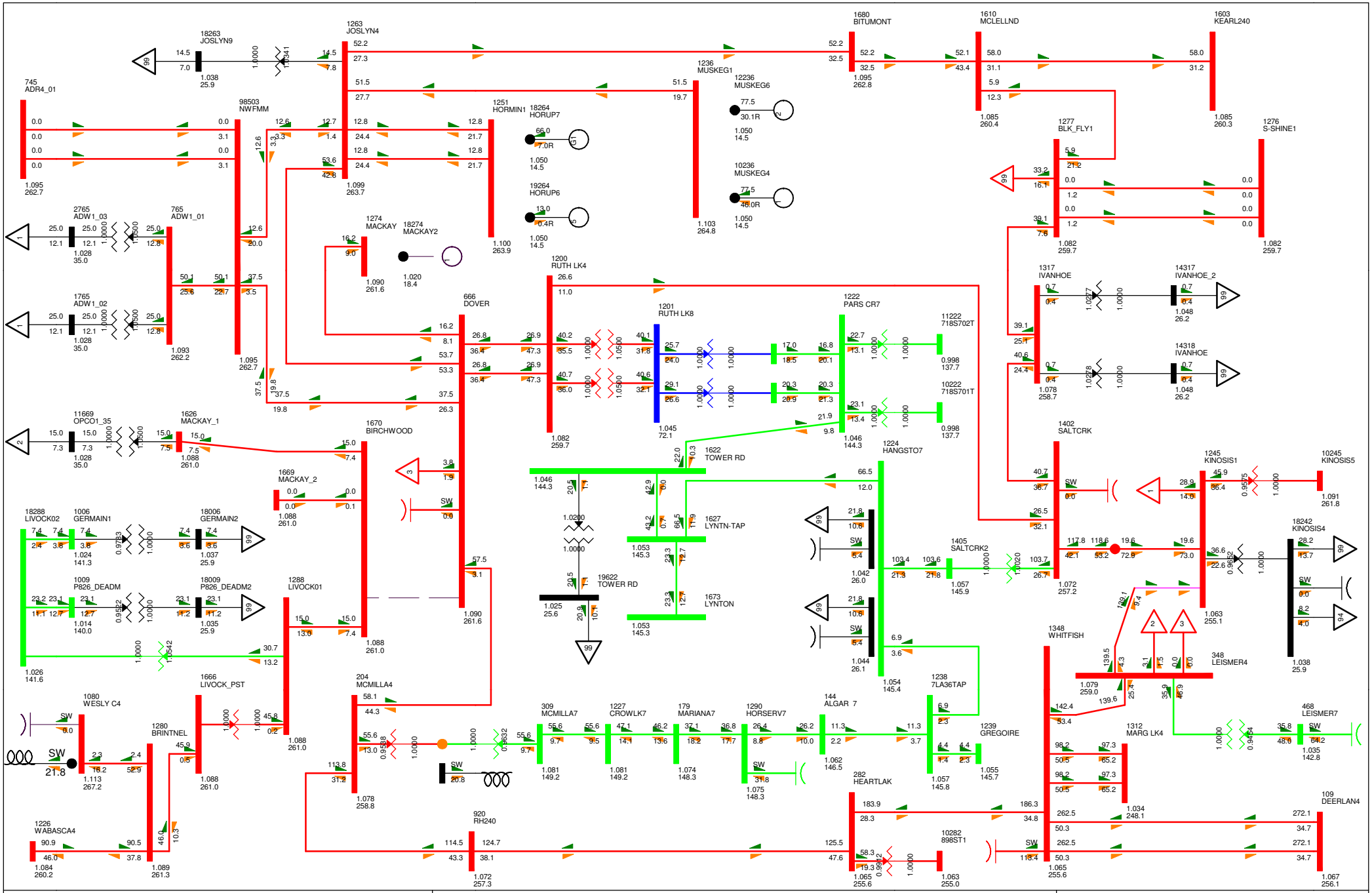

BC - Alberta (IMPORT)789.9 MW

2012WP BASE CASE
SWINGBUS 1520 FOR FC-2009-5:2013-04-30:19:24--1--1-0-0
MON, AUG 15 2011 15:30

NW FMM STUDY

Figure E-2013WP-6

Bus - VOLTAGE (kV/PU)
Branch - MW/Mvar
Equipment - MW/Mvar
100.0%RATEB
1.120OV 0.950UV
kV: <=34.500 <=69.000 <=138.000 <=240.000 <=500.000 >500.000

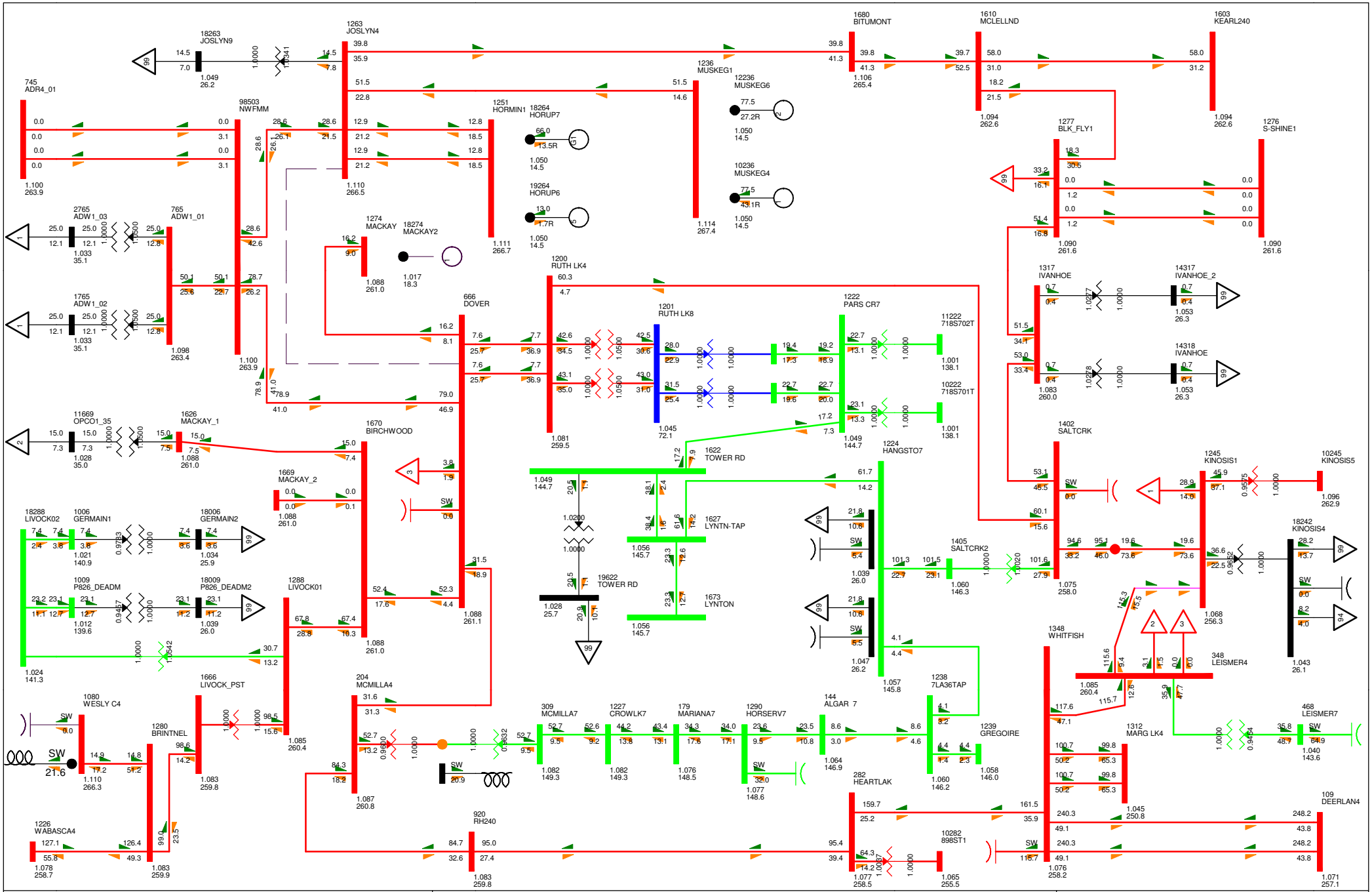

BC - Alberta (IMPORT)786.7 MW

2012WP BASE CASE
SWINGBUS 1520 FOR FC-2009-5:2013-04-30:19:24--1--1-0-0
MON, AUG 15 2011 15:30

NW FMM STUDY

Figure E-2013WP-7

Bus - VOLTAGE (kV/PU)
Branch - MW/Mvar
Equipment - MW/Mvar
100.0%RATEB
1.120OV 0.950UV
kV: <=34.500 <=69.000 <=138.000 <=240.000 <=500.000 >500.000

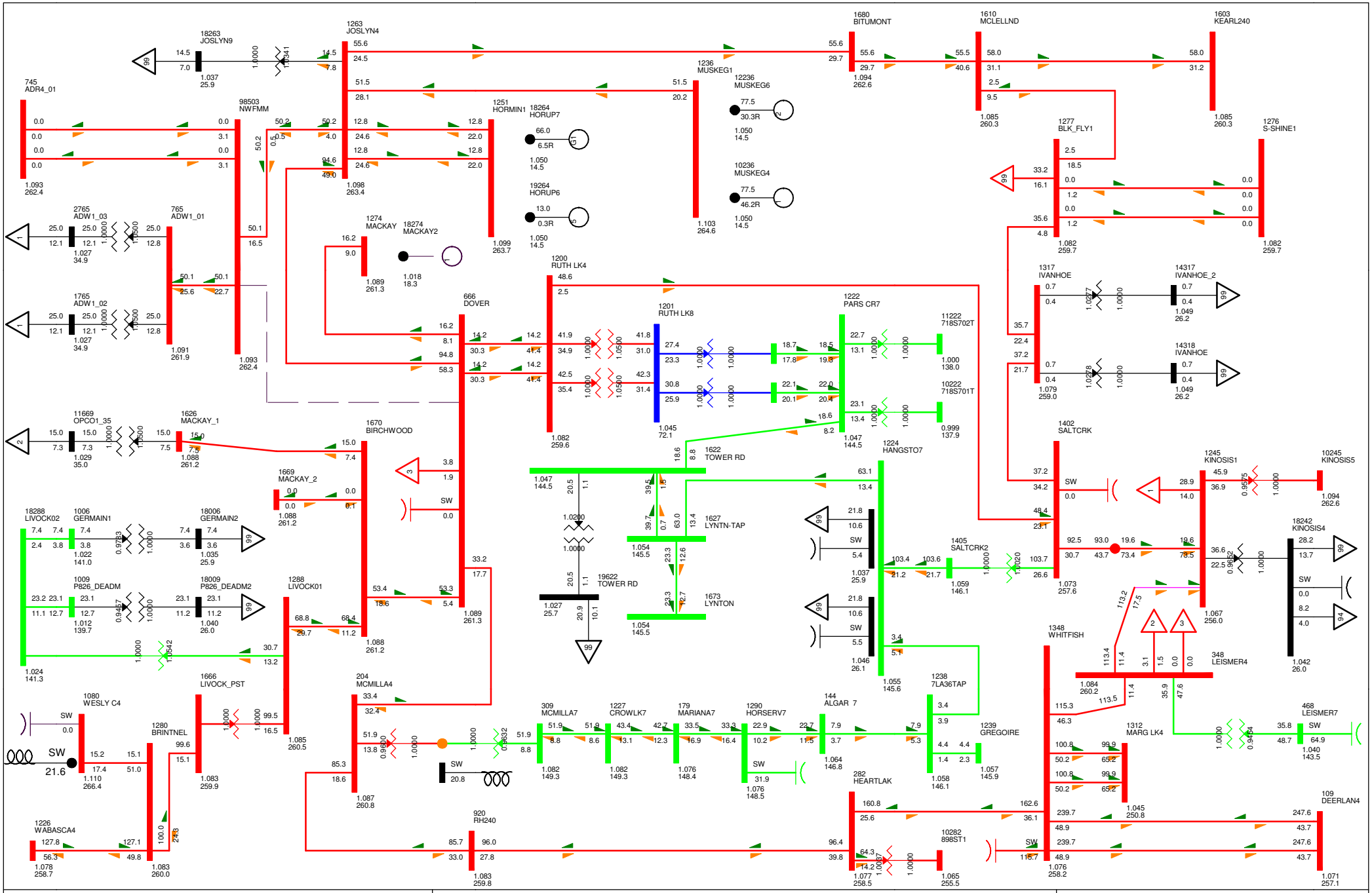
18263 JOSLYN9
1263 JOSLYN4
1680 BITUMONT
1610 MCLELLND
1603 KEARL240
745 ADR4_01
98503 NWFMM
1236 MUSKEG1
12236 MUSKEG6
10236 MUSKEG4
1251 HORMIN1
18264 HORUP7
19264 HORUP6
1277 BLK_FLY1
1276 S-SHINE1
2765 ADW1_03
765 ADW1_01
1765 ADW1_02
1274 MACKAY
18274 MACKAY2
1200 RUTH LK4
666 DOVER
1201 RUTH LK8
1222 PARS CR7
11222 718S702T
10222 718S701T
1224 HANGSTO7
1317 IVANHOE
14317 IVANHOE_2
14318 IVANHOE
1402 SALTCRK
1245 KINOSIS1
10245 KINOSIS5
18242 KINOSIS4
11669 OPCO1_35
1626 MACKAY_1
1670 BIRCHWOOD
1669 MACKAY_2
1622 TOWER RD
1627 LYNTN-TAP
1673 LYNTON
19622 TOWER RD
1405 SALTCRK2
1348 WHITFISH
348 LEISMER4
18288 LIVOCK02
1006 GERMAIN1
18006 GERMAIN2
1009 P826_DEADM
18009 P826_DEADM2
1288 LIVOCK01
1666 LIVOCK_PST
204 MCMILLA4
309 MCMILLA7
1227 CROWLK7
179 MARIANA7
1290 HORSERV7
144 ALGAR 7
1238 7LA36TAP
1239 GREGOIRE
282 HEARTLAK
1312 MARG LK4
468 LEISMER7
1080 WESLY C4
1280 BRINTNEL
1226 WABASCA4
920 RH240
10282 898ST1
109 DEERLAN4
BC - Alberta (IMPORT)786.5 MW
2012WP BASE CASE
SWINGBUS 1520 FOR FC-2009-5:2013-04-30:19:24--1--1-0-0
MON, AUG 15 2011 15:30
NW FMM STUDY
Figure E-2013WP-8
Bus - VOLTAGE (kV/PU)
Branch - MW/Mvar
Equipment - MW/Mvar
100.0%RATEB
1.120OV 0.950UV
kV: <=34.500 <=69.000 <=138.000 <=240.000 <=500.000 >500.000

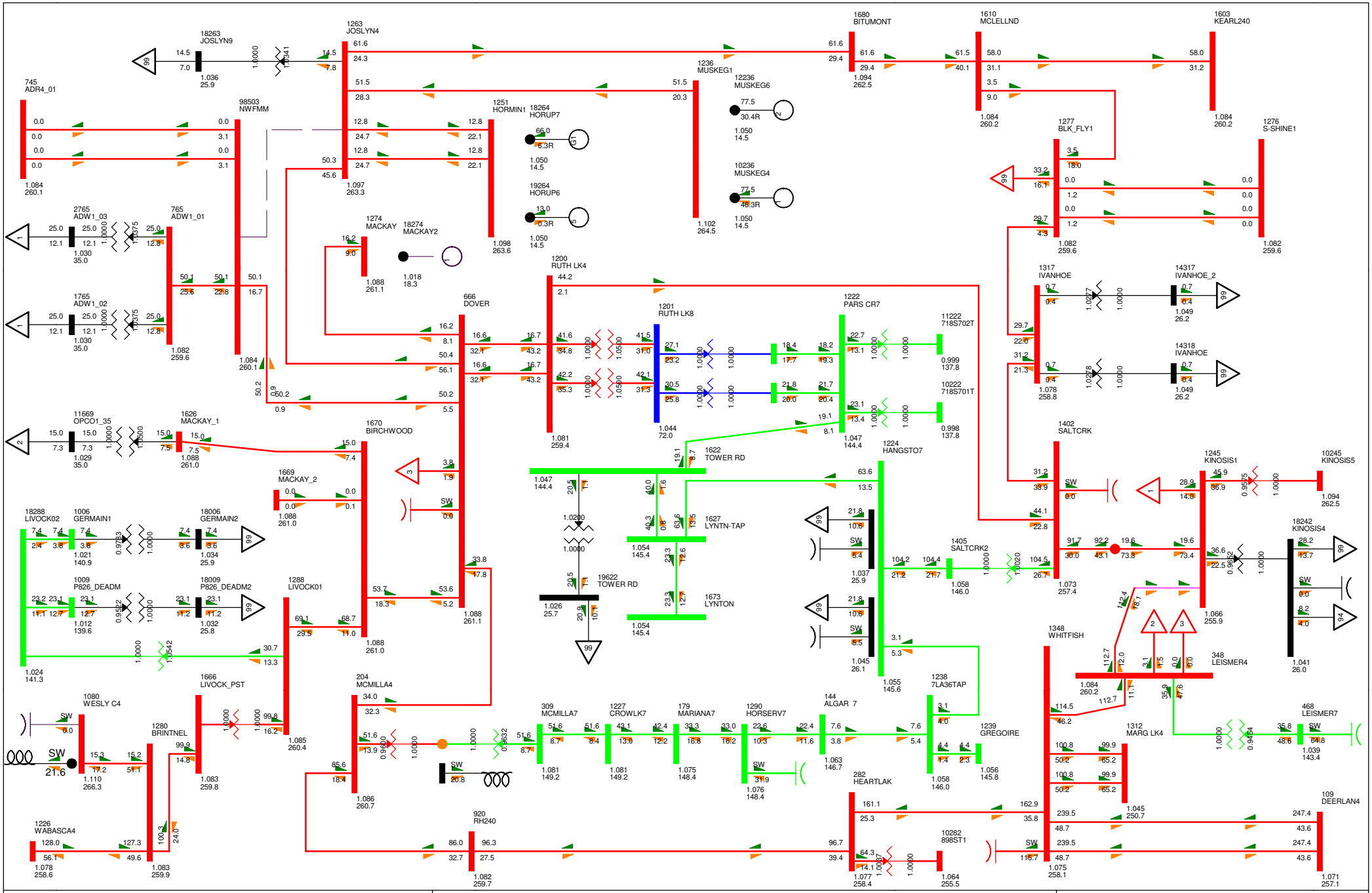
18263 JOSLYN9
1263 JOSLYN4
1680 BITUMONT
1610 MCLELLND
1603 KEARL240
745 ADR4_01
98503 NWFMM
1236 MUSKEG1
12236 MUSKEG6
10236 MUSKEG4
1251 HORMIN1
18264 HORUP7
19264 HORUP6
1277 BLK_FLY1
1276 S-SHINE1
2765 ADW1_03
765 ADW1_01
1765 ADW1_02
1274 MACKAY
18274 MACKAY2
1200 RUTH LK4
1201 RUTH LK8
666 DOVER
1222 PARS CR7
11222 718S702T
10222 718S701T
1317 IVANHOE
14317 IVANHOE_2
14318 IVANHOE
11669 OPCO1_35
1626 MACKAY_1
1670 BIRCHWOOD
1669 MACKAY_2
1622 TOWER RD
1224 HANGSTO7
1402 SALTCRK
1245 KINOSIS1
10245 KINOSIS5
18288 LIVOCK02
1006 GERMAIN1
18006 GERMAIN2
1009 P826_DEADM
18009 P826_DEADM2
1288 LIVOCK01
19622 TOWER RD
1627 LYNTN-TAP
1673 LYNTON
1405 SALTCRK2
18242 KINOSIS4
1348 WHITFISH
348 LEISMER4
1080 WESLY C4
1666 LIVOCK_PST
204 MCMILLA4
309 MCMILLA7
1227 CROWLK7
179 MARIANA7
1290 HORSERV7
144 ALGAR 7
1238 7LA36TAP
1239 GREGOIRE
468 LEISMER7
1280 BRINTNEL
1312 MARG LK4
282 HEARTLAK
109 DEERLAN4
1226 WABASCA4
920 RH240
10282 898ST1
1085 260.4
1086 260.7
1088 261.0
1084 260.1
1084 260.2
1082 259.6
1081 259.4
1044 72.0
1047 144.4
1054 145.4
1037 25.9
1055 145.6
1073 257.4
1066 255.9
1041 26.0
1045 250.7
1075 258.1
1071 257.1
1063 146.7
1058 146.0
1056 145.8
1039 143.4
1110 266.3
1083 259.8
1078 258.6
1083 259.9
1082 259.7
1064 255.5
1077 258.4
1076 148.4
1075 148.4
1081 149.2
1098 263.6
1102 264.5
1097 263.3
1088 261.1
1018 18.3
1050 14.5
1049 26.2
1078 258.8
1029 35.0
1030 35.0
1088 261.0
1021 140.9
1034 25.9
1012 139.6
1032 25.8
1024 141.3
1026 25.7
1058 146.0
1094 262.5
1039 143.4
1045 250.7
1075 258.1
1071 257.1
BC - Alberta (IMPORT)786.4 MW
2012WP BASE CASE
SWINGBUS 1520 FOR FC-2009-5:2013-04-30:19:24--1--1-0-0
MON, AUG 15 2011 15:30
NW FMM STUDY
Figure E-2013WP-9
Bus - VOLTAGE (kV/PU)
Branch - MW/Mvar
Equipment - MW/Mvar
100.0%RATEB
1.120OV 0.950UV
kV: <=34.500 <=69.000 <=138.000 <=240.000 <=500.000 >500.000

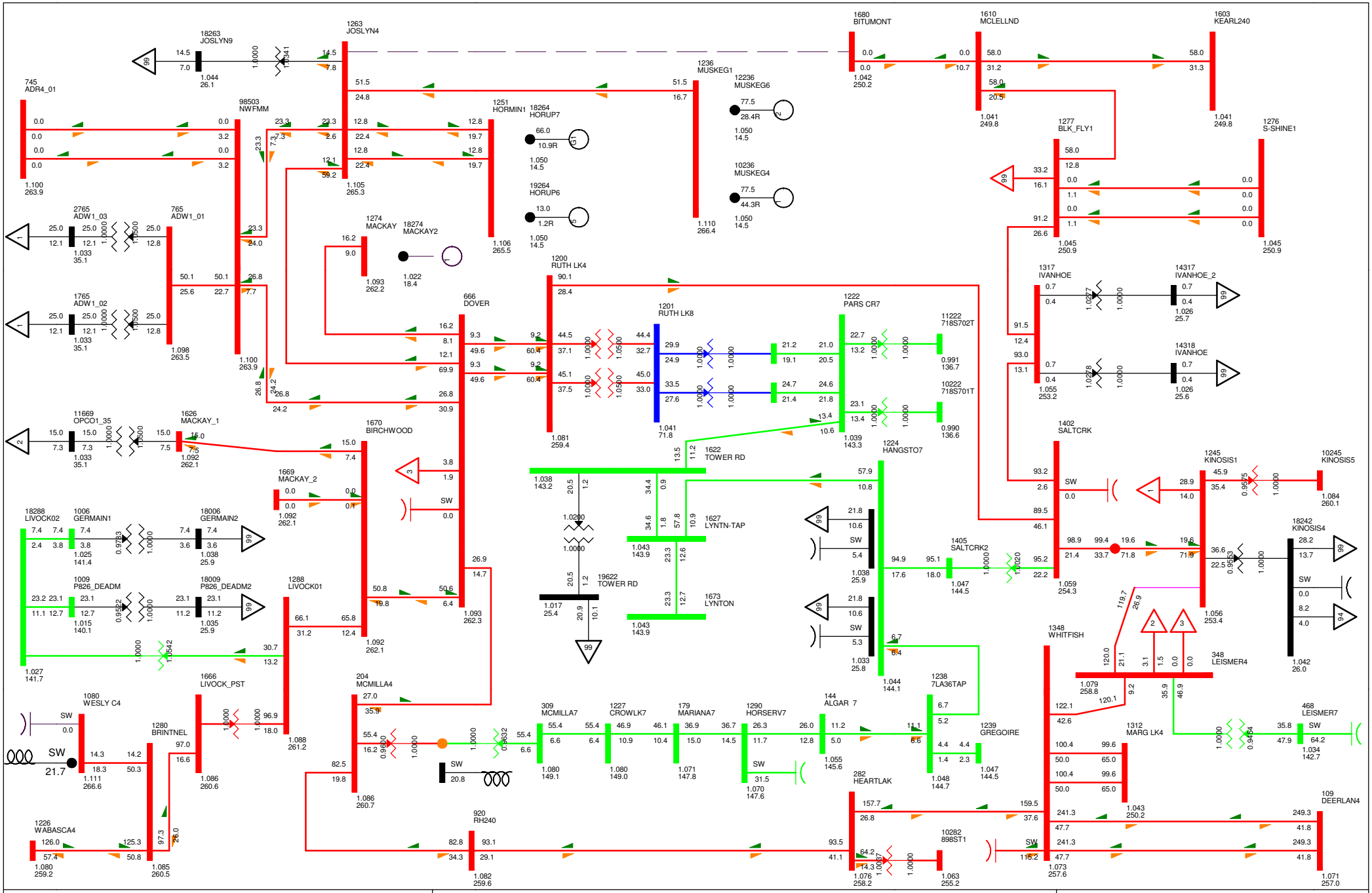
18263 JOSLYN9
1263 JOSLYN4
1680 BITUMONT
1610 MCLELLND
1603 KEARL240
745 ADR4_01
98503 NWFMM
1251 HORMIN1
18264 HORUP7
1236 MUSKEG1
12236 MUSKEG6
10236 MUSKEG4
19264 HORUP6
1277 BLK_FLY1
1276 S-SHINE1
2765 ADW1_03
765 ADW1_01
1765 ADW1_02
1274 MACKAY
18274 MACKAY2
1200 RUTH LK4
1201 RUTH LK8
666 DOVER
1222 PARS CR7
11222 718S702T
10222 718S701T
1317 IVANHOE
14317 IVANHOE_2
14318 IVANHOE
11669 OPCO1_35
1626 MACKAY_1
1670 BIRCHWOOD
1669 MACKAY_2
1622 TOWER RD
1224 HANGSTO7
1402 SALTCRK
1245 KINOSIS1
10245 KINOSIS5
18288 LIVOCK02
1006 GERMAIN1
18006 GERMAIN2
1009 P826_DEADM
18009 P826_DEADM2
1288 LIVOCK01
1627 LYNTN-TAP
19622 TOWER RD
1673 LYNTON
1405 SALTCRK2
1242 KINOSIS4
1348 WHITFISH
348 LEISMER4
1080 WESLY C4
1666 LIVOCK_PST
1280 BRINTNEL
204 MCMILLA4
309 MCMILLA7
1227 CROWLK7
179 MARIANA7
1290 HORSERV7
144 ALGAR 7
1238 7LA36TAP
1239 GREGOIRE
282 HEARTLAK
1312 MARG LK4
468 LEISMER7
1226 WABASCA4
920 RH240
10282 898ST1
109 DEERLAN4
BC - Alberta (IMPORT)787.8 MW
2012WP BASE CASE
SWINGBUS 1520 FOR FC-2009-5:2013-04-30:19:24--1--1-0-0
MON, AUG 15 2011 15:30
NW FMM STUDY
Figure E-2013WP-10
Bus - VOLTAGE (kV/PU)
Branch - MW/Mvar
Equipment - MW/Mvar
100.0%RATEB
1.120OV 0.950UV
kV: <=34.500 <=69.000 <=138.000 <=240.000 <=500.000 >500.000

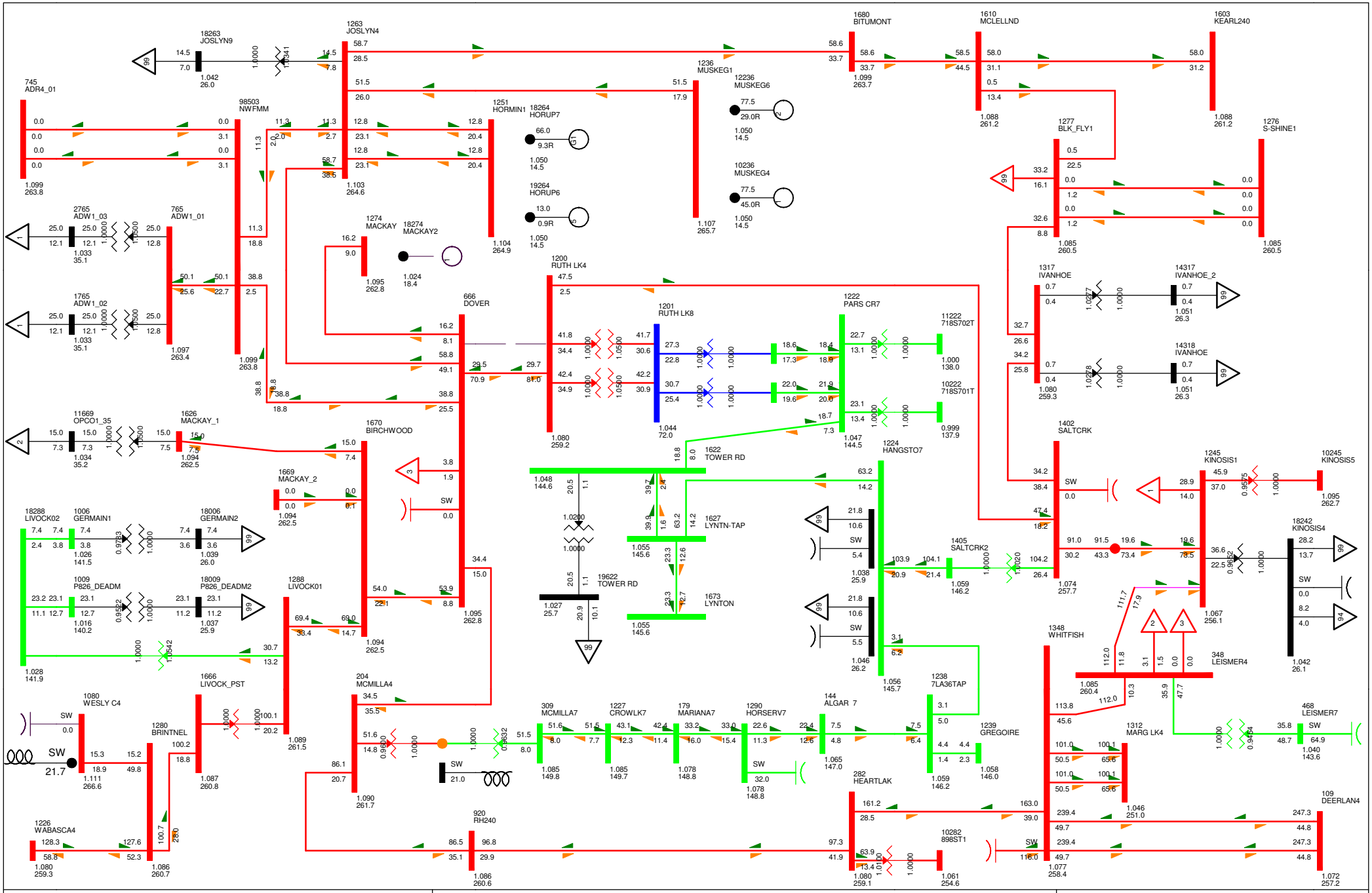
18263 JOSLYN9
1263 JOSLYN4
1680 BITUMONT
1610 MCLELLND
1603 KEARL240
745 ADR4_01
98503 NWFMM
1236 MUSKEG1
12236 MUSKEG6
10236 MUSKEG4
1251 HORMIN1
18264 HORUP7
19264 HORUP6
1277 BLK_FLY1
1276 S-SHINE1
2765 ADW1_03
765 ADW1_01
1765 ADW1_02
1274 MACKAY
18274 MACKAY2
1200 RUTH LK4
1201 RUTH LK8
1222 PARS CR7
11222 718S702T
10222 718S701T
1224 HANGSTO7
1317 IVANHOE
14317 IVANHOE_2
14318 IVANHOE
666 DOVER
1402 SALTCRK
1245 KINOSIS1
10245 KINOSIS5
18242 KINOSIS4
11669 OPCO1_35
1626 MACKAY_1
1670 BIRCHWOOD
1669 MACKAY_2
1622 TOWER RD
1627 LYNTN-TAP
1673 LYNTON
19622 TOWER RD
1405 SALTCRK2
1348 WHITFISH
348 LEISMER4
18288 LIVOCK02
1006 GERMAIN1
18006 GERMAIN2
1009 P826_DEADM
18009 P826_DEADM2
1288 LIVOCK01
1666 LIVOCK_PST
204 MCMILLA4
309 MCMILLA7
1227 CROWLK7
179 MARIANA7
1290 HORSERV7
144 ALGAR 7
1238 7LA36TAP
1239 GREGOIRE
282 HEARTLAK
1312 MARG LK4
468 LEISMER7
1080 WESLY C4
1280 BRINTNEL
1226 WABASCA4
920 RH240
10282 898ST1
109 DEERLAN4
SW
21.7
BC - Alberta (IMPORT)786.4 MW
2012WP BASE CASE
SWINGBUS 1520 FOR FC-2009-5:2013-04-30:19:24--1--1-0-0
MON, AUG 15 2011 15:31
NW FMM STUDY
Figure E-2013WP-11
Bus - VOLTAGE (kV/PU)
Branch - MW/Mvar
Equipment - MW/Mvar
100.0%RATEB
1.120OV 0.950UV
kV: <=34.500 <=69.000 <=138.000 <=240.000 <=500.000 >500.000

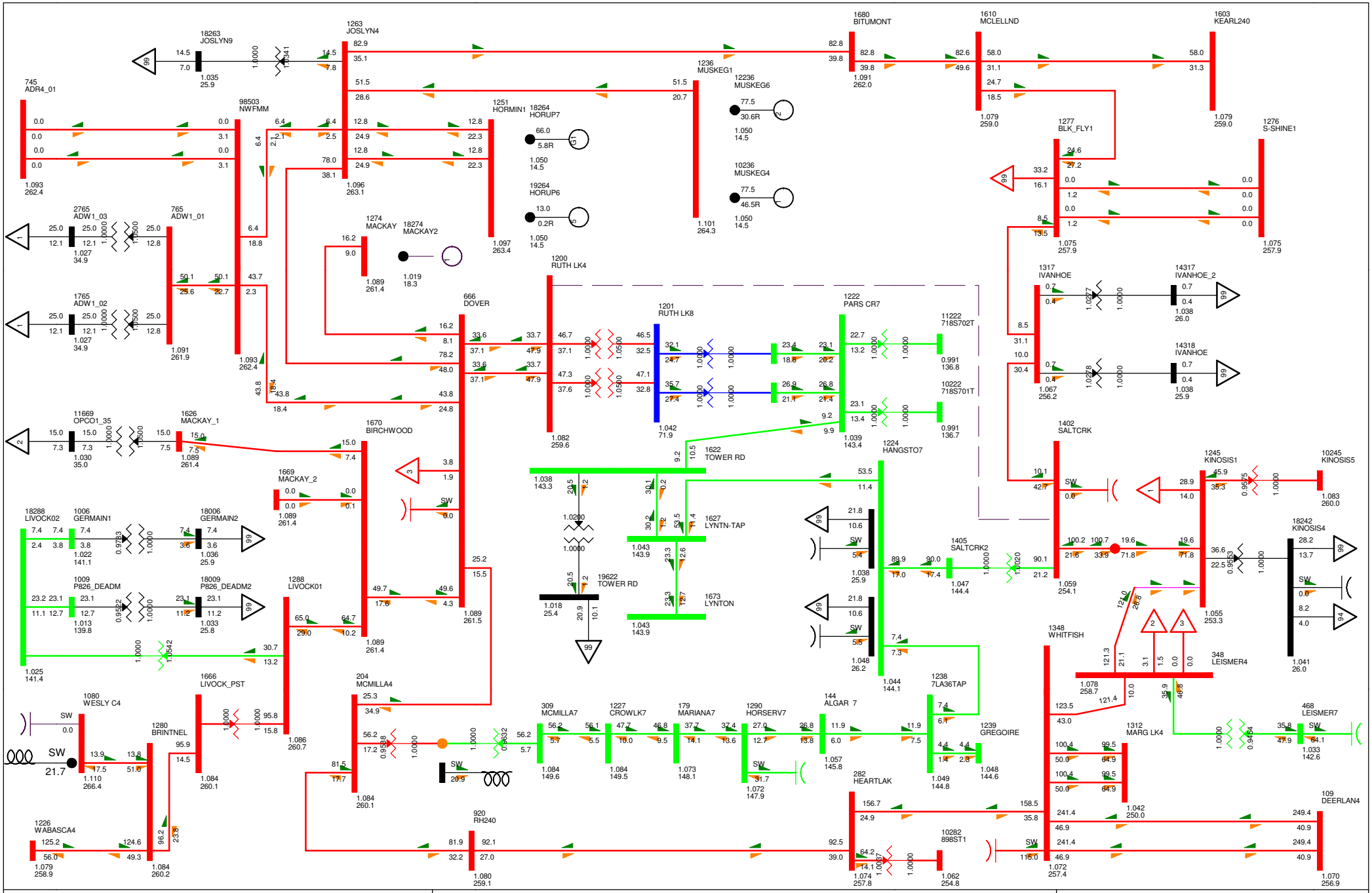
18263 JOSLYN9
1263 JOSLYN4
1680 BITUMONT
1610 MCLELLND
1603 KEARL240
745 ADR4_01
98503 NWFMM
1236 MUSKEG1
12236 MUSKEG6
10236 MUSKEG4
1251 HORMIN1
18264 HORUP7
19264 HORUP6
1277 BLK_FLY1
1276 S-SHINE1
2765 ADW1_03
765 ADW1_01
1765 ADW1_02
1274 MACKAY
18274 MACKAY2
1200 RUTH LK4
666 DOVER
1201 RUTH LK8
1222 PARS CR7
11222 718S702T
10222 718S701T
1317 IVANHOE
14317 IVANHOE_2
14318 IVANHOE
11669 OPCO1_35
1626 MACKAY_1
1670 BIRCHWOOD
1669 MACKAY_2
1622 TOWER RD
1224 HANGSTO7
1402 SALTCRK
1245 KINOSIS1
10245 KINOSIS5
18288 LIVOCK02
1006 GERMAIN1
18006 GERMAIN2
1009 P826_DEADM
18009 P826_DEADM2
1288 LIVOCK01
19622 TOWER RD
1627 LYNTN-TAP
1673 LYNTON
1405 SALTCRK2
1348 WHITFISH
18242 KINOSIS4
348 LEISMER4
1080 WESLY C4
1666 LIVOCK_PST
1280 BRINTNEL
204 MCMILLA4
309 MCMILLA7
1227 CROWLK7
179 MARIANA7
1290 HORSERV7
144 ALGAR 7
1238 7LA36TAP
1239 GREGOIRE
282 HEARTLAK
1312 MARG LK4
468 LEISMER7
1226 WABASCA4
920 RH240
10282 898ST1
109 DEERLAN4
BC - Alberta (IMPORT)787.0 MW
2012WP BASE CASE
SWINGBUS 1520 FOR FC-2009-5:2013-04-30:19:24--1--1-0-0
MON, AUG 15 2011 15:31
NW FMM STUDY
Figure E-2013WP-12
Bus - VOLTAGE (kV/PU)
Branch - MW/Mvar
Equipment - MW/Mvar
100.0%RATEB
1.120OV 0.950UV
kV: <=34.500 <=69.000 <=138.000 <=240.000 <=500.000 >500.000

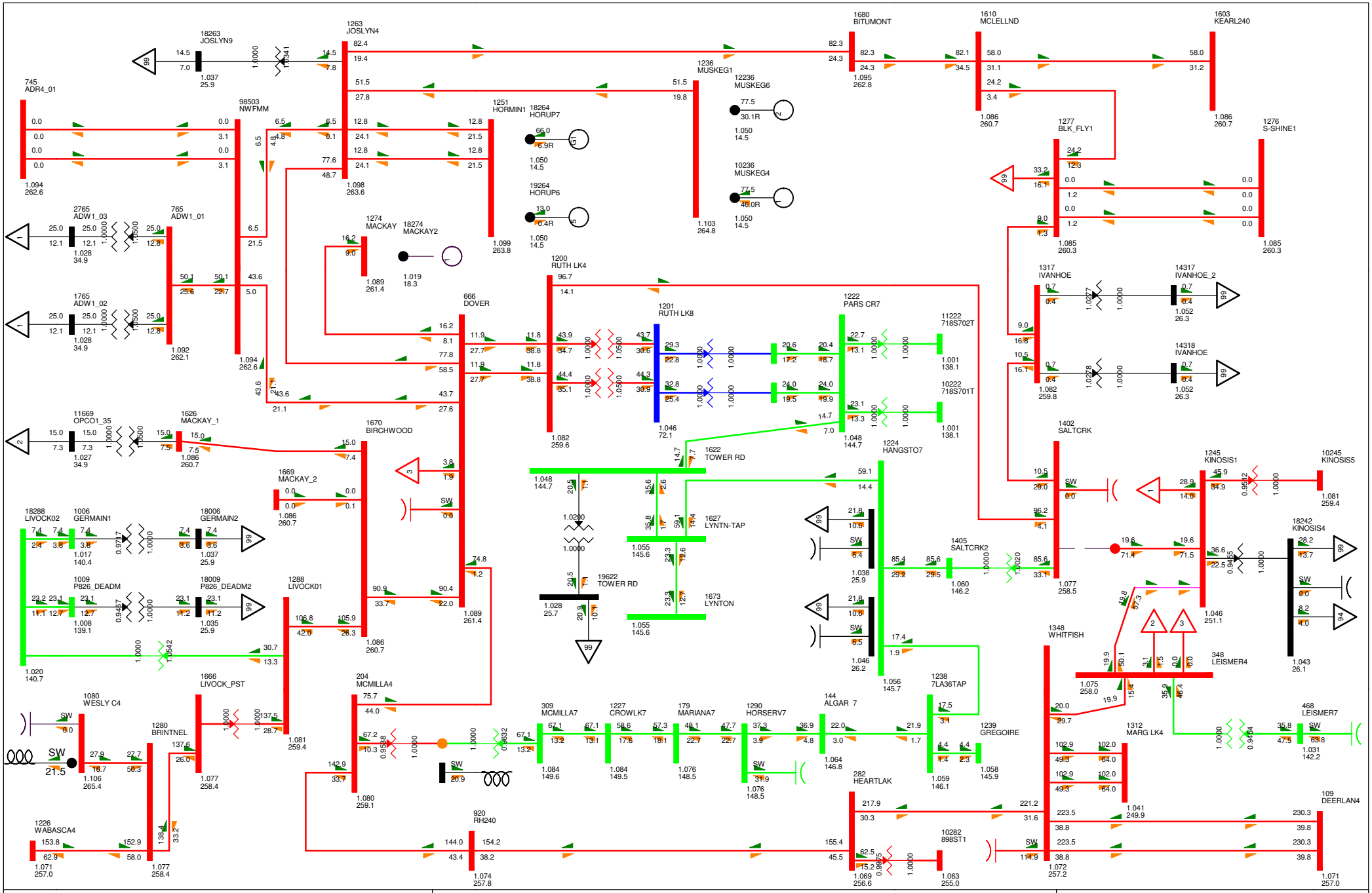
18263 JOSLYN9
1263 JOSLYN4
1680 BITUMONT
1610 MCLELLND
1603 KEARL240
745 ADR4_01
98503 NWFMM
1236 MUSKEG1
12236 MUSKEG6
10236 MUSKEG4
1251 HORMIN1
18264 HORUP7
19264 HORUP6
1277 BLK_FLY1
1276 S-SHINE1
2765 ADW1_03
765 ADW1_01
1765 ADW1_02
1274 MACKAY
18274 MACKAY2
1200 RUTH LK4
1201 RUTH LK8
666 DOVER
1222 PARS CR7
11222 718S702T
10222 718S701T
1317 IVANHOE
14317 IVANHOE_2
14318 IVANHOE
11669 OPCO1_35
1626 MACKAY_1
1670 BIRCHWOOD
1669 MACKAY_2
1622 TOWER RD
1224 HANGSTO7
1402 SALTCRK
1245 KINOSIS1
10245 KINOSIS5
18288 LIVOCK02
1006 GERMAIN1
18006 GERMAIN2
1009 P826_DEADM
18009 P826_DEADM2
1627 LYNTN-TAP
19622 TOWER RD
1673 LYNTON
1405 SALTCRK2
18242 KINOSIS4
1288 LIVOCK01
1348 WHITFISH
348 LEISMER4
1080 WESLY C4
1666 LIVOCK_PST
204 MCMILLA4
309 MCMILLA7
1227 CROWLK7
179 MARIANA7
1290 HORSERV7
144 ALGAR 7
1238 7LA36TAP
1239 GREGOIRE
1280 BRINTNEL
282 HEARTLAK
1312 MARG LK4
468 LEISMER7
1226 WABASCA4
920 RH240
10282 898ST1
109 DEERLAN4
BC - Alberta (IMPORT)793.3 MW
2012WP BASE CASE
SWINGBUS 1520 FOR FC-2009-5:2013-04-30:19:24--1--1-0-0
MON, AUG 15 2011 15:31
NW FMM STUDY
Figure E-2013WP-13
Bus - VOLTAGE (kV/PU)
Branch - MW/Mvar
Equipment - MW/Mvar
100.0%RATEB
1.120OV 0.950UV
kV: <=34.500 <=69.000 <=138.000 <=240.000 <=500.000 >500.000

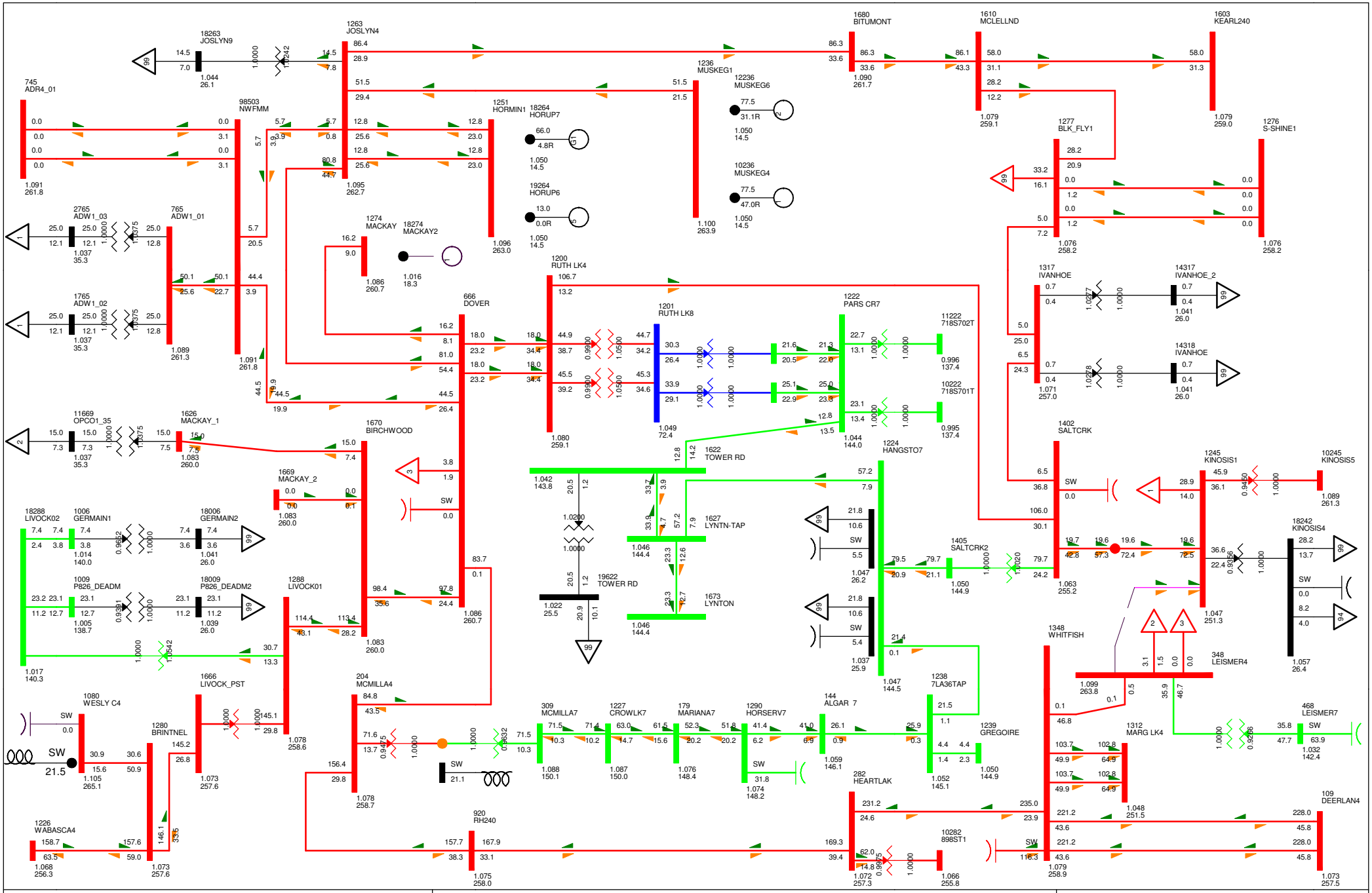
18263 JOSLYN9
1263 JOSLYN4
1680 BITUMONT
1610 MCLELLND
1603 KEARL240
745 ADR4_01
98503 NWFMM
1251 HORMIN1
18264 HORUP7
1236 MUSKEG1
12236 MUSKEG6
10236 MUSKEG4
19264 HORUP6
1277 BLK_FLY1
1276 S-SHINE1
2765 ADW1_03
765 ADW1_01
1765 ADW1_02
1274 MACKAY
18274 MACKAY2
1200 RUTH LK4
1201 RUTH LK8
666 DOVER
1222 PARS CR7
11222 718S702T
10222 718S701T
1317 IVANHOE
14317 IVANHOE_2
14318 IVANHOE
11669 OPCO1_35
1626 MACKAY_1
1670 BIRCHWOOD
1669 MACKAY_2
1622 TOWER RD
1224 HANGSTO7
1402 SALTCRK
1245 KINOSIS1
10245 KINOSIS5
18288 LIVOCK02
1006 GERMAIN1
18006 GERMAIN2
1009 P826_DEADM
18009 P826_DEADM2
1288 LIVOCK01
1627 LYNTN-TAP
19622 TOWER RD
1673 LYNTON
1405 SALTCRK2
1242 KINOSIS4
1080 WESLY C4
1666 LIVOCK_PST
204 MCMILLA4
309 MCMILLA7
1227 CROWLK7
179 MARIANA7
1290 HORSERV7
144 ALGAR 7
1238 7LA36TAP
1239 GREGOIRE
1348 WHITFISH
348 LEISMER4
468 LEISMER7
1312 MARG LK4
1280 BRINTNEL
282 HEARTLAK
920 RH240
1226 WABASCA4
10282 898ST1
109 DEERLAN4
SW
21.5
BC - Alberta (IMPORT)795.9 MW
2012WP BASE CASE
SWINGBUS 1520 FOR FC-2009-5:2013-04-30:19:24--1--1-0-0
MON, AUG 15 2011 15:31
NW FMM STUDY
Figure E-2013WP-14
Bus - VOLTAGE (kV/PU)
Branch - MW/Mvar
Equipment - MW/Mvar
100.0%RATEB
1.120OV 0.950UV
kV: <=34.500 <=69.000 <=138.000 <=240.000 <=500.000 >500.000

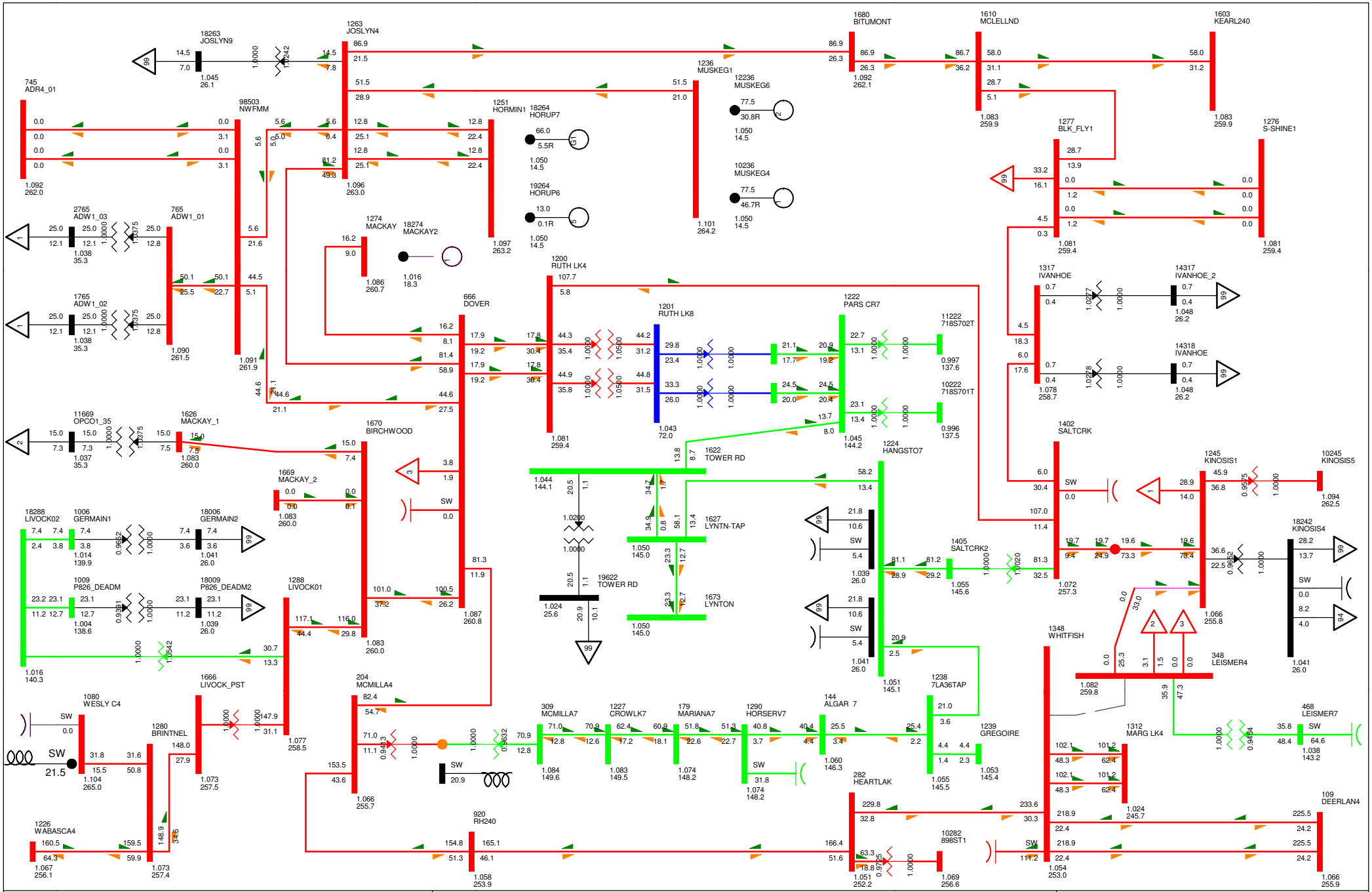
18263 JOSLYN9
1263 JOSLYN4
1680 BITUMONT
1610 MCLELLND
1603 KEARL240
745 ADR4_01
98503 NWFMM
1236 MUSKEG1
12236 MUSKEG6
10236 MUSKEG4
1251 HORMIN1
18264 HORUP7
19264 HORUP6
1277 BLK_FLY1
1276 S-SHINE1
2765 ADW1_03
765 ADW1_01
1765 ADW1_02
1274 MACKAY
18274 MACKAY2
1200 RUTH LK4
666 DOVER
1201 RUTH LK8
1222 PARS CR7
11222 718S702T
10222 718S701T
1317 IVANHOE
14317 IVANHOE_2
14318 IVANHOE
11669 OPCO1_35
1626 MACKAY_1
1670 BIRCHWOOD
1669 MACKAY_2
1622 TOWER RD
1224 HANGSTO7
1402 SALTCRK
1245 KINOSIS1
10245 KINOSIS5
18242 KINOSIS4
18288 LIVOCK02
1006 GERMAIN1
18006 GERMAIN2
1009 P826_DEADM
18009 P826_DEADM2
1288 LIVOCK01
1627 LYNTN-TAP
19622 TOWER RD
1673 LYNTON
1405 SALTCRK2
1348 WHITFISH
348 LEISMER4
1080 WESLY C4
1666 LIVOCK_PST
204 MCMILLA4
309 MCMILLA7
1227 CROWLK7
179 MARIANA7
1290 HORSERV7
144 ALGAR 7
1238 7LA36TAP
1239 GREGOIRE
1312 MARG LK4
468 LEISMER7
1280 BRINTNEL
282 HEARTLAK
920 RH240
1226 WABASCA4
10282 898ST1
109 DEERLAN4
BC - Alberta (IMPORT)797.3 MW
2012WP BASE CASE
SWINGBUS 1520 FOR FC-2009-5:2013-04-30:19:24--1--1-0-0
MON, AUG 15 2011 15:31
NW FMM STUDY
Figure E-2013WP-15
Bus - VOLTAGE (kV/PU)
Branch - MW/Mvar
Equipment - MW/Mvar
100.0%RATEB
1.120OV 0.950UV
kV: <=34.500 <=69.000 <=138.000 <=240.000 <=500.000 >500.000

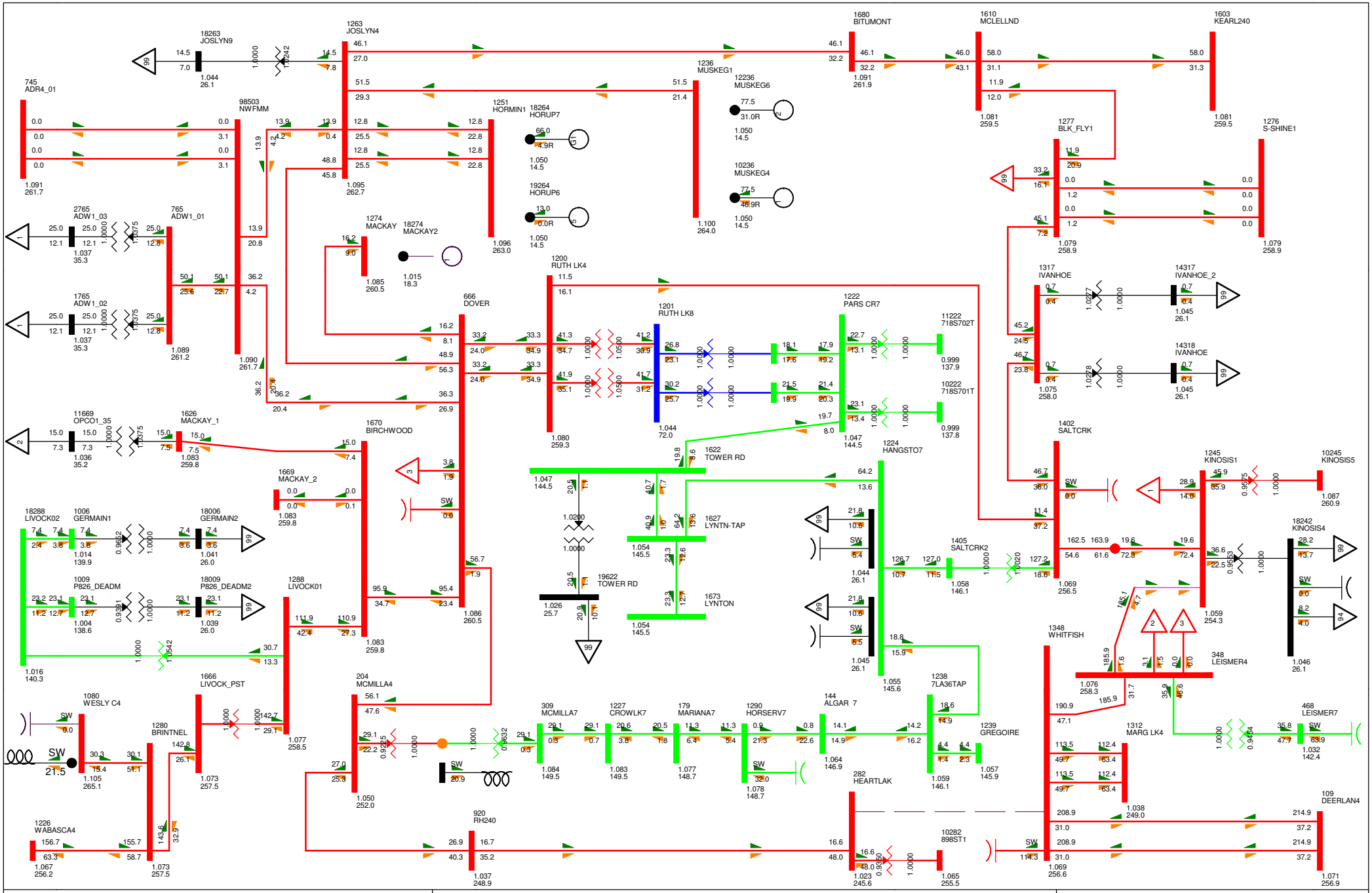

BC - Alberta (IMPORT)808.9 MW

2012WP BASE CASE
SWINGBUS 1520 FOR FC-2009-5:2013-04-30:19:24--1--1-0-0
MON, AUG 15 2011 15:31

NW FMM STUDY

Figure E-2013WP-16

Bus - VOLTAGE (kV/PU)
Branch - MW/Mvar
Equipment - MW/Mvar
100.0%RATEB
1.120OV 0.950UV
kV: <=34.500 <=69.000 <=138.000 <=240.000 <=500.000 >500.000

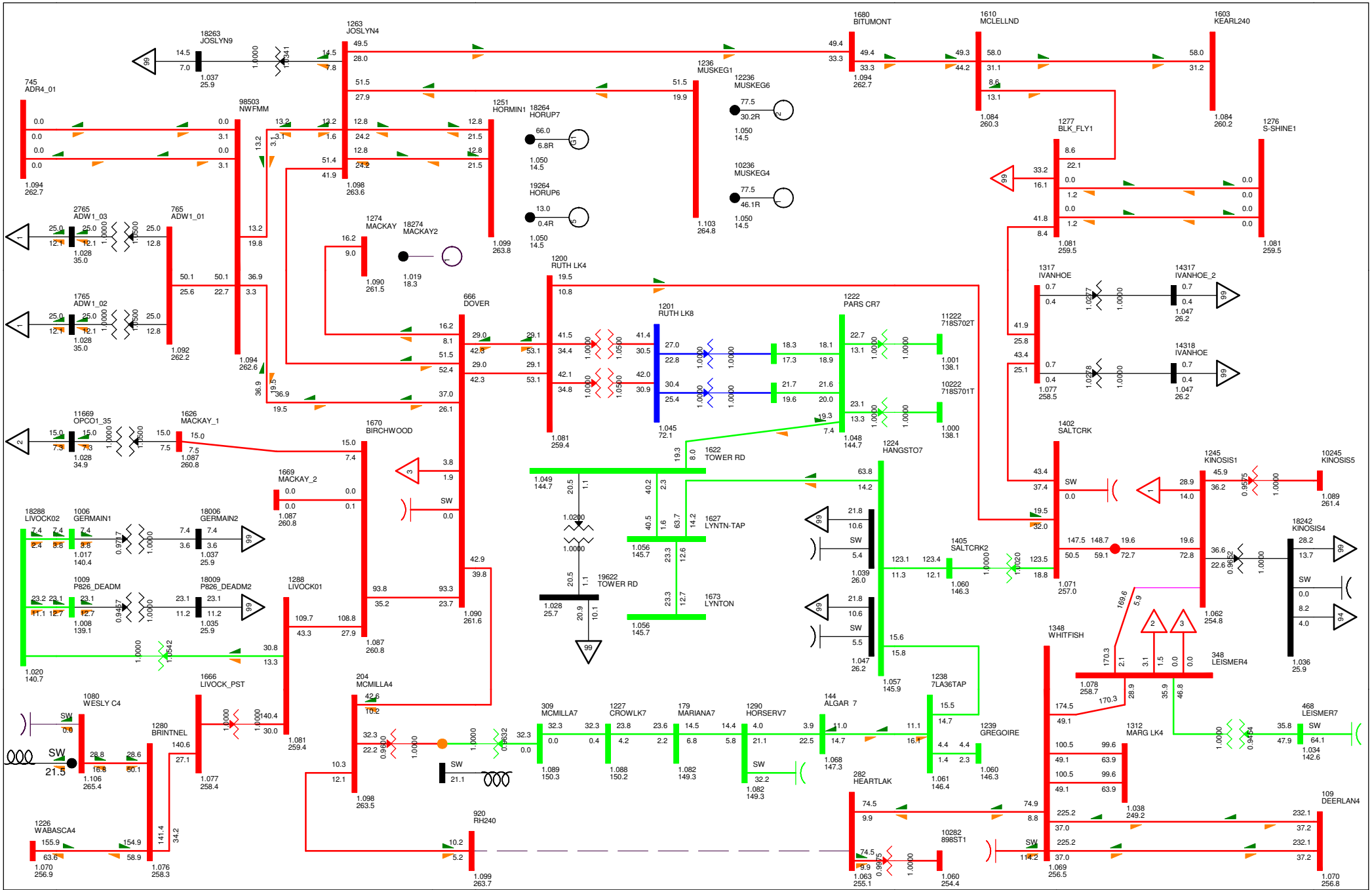
18263 JOSLYN9
1263 JOSLYN4
1680 BITUMONT
1610 MCLELLND
1603 KEARL240
745 ADR4_01
98503 NWFMM
1251 HORMIN1
18264 HORUP7
1236 MUSKEG1
12236 MUSKEG6
10236 MUSKEG4
19264 HORUP6
1277 BLK_FLY1
1276 S-SHINE1
2765 ADW1_03
765 ADW1_01
1765 ADW1_02
1274 MACKAY
18274 MACKAY2
1200 RUTH LK4
1201 RUTH LK8
666 DOVER
1222 PARS CR7
11222 718S702T
10222 718S701T
1317 IVANHOE
14317 IVANHOE_2
14318 IVANHOE
11669 OPCO1_35
1626 MACKAY_1
1670 BIRCHWOOD
1669 MACKAY_2
1622 TOWER RD
1224 HANGSTO7
1402 SALTCRK
1245 KINOSIS1
10245 KINOSIS5
18288 LIVOCK02
1006 GERMAIN1
18006 GERMAIN2
1009 P826_DEADM
18009 P826_DEADM2
1288 LIVOCK01
1627 LYNTN-TAP
19622 TOWER RD
1673 LYNTON
1405 SALTCRK2
18242 KINOSIS4
1348 WHITFISH
348 LEISMER4
1080 WESLY C4
1666 LIVOCK_PST
204 MCMILLA4
309 MCMILLA7
1227 CROWLK7
179 MARIANA7
1290 HORSERV7
144 ALGAR 7
1238 7LA36TAP
1239 GREGOIRE
468 LEISMER7
1280 BRINTNEL
282 HEARTLAK
1312 MARG LK4
109 DEERLAN4
1226 WABASCA4
920 RH240
10282 898ST1
BC - Alberta (IMPORT)791.1 MW
2012WP BASE CASE
SWINGBUS 1520 FOR FC-2009-5:2013-04-30:19:24--1--1-0-0
MON, AUG 15 2011 15:31
NW FMM STUDY
Figure E-2013WP-17
Bus - VOLTAGE (kV/PU)
Branch - MW/Mvar
Equipment - MW/Mvar
100.0%RATEB
1.120OV 0.950UV
kV: <=34.500 <=69.000 <=138.000 <=240.000 <=500.000 >500.000

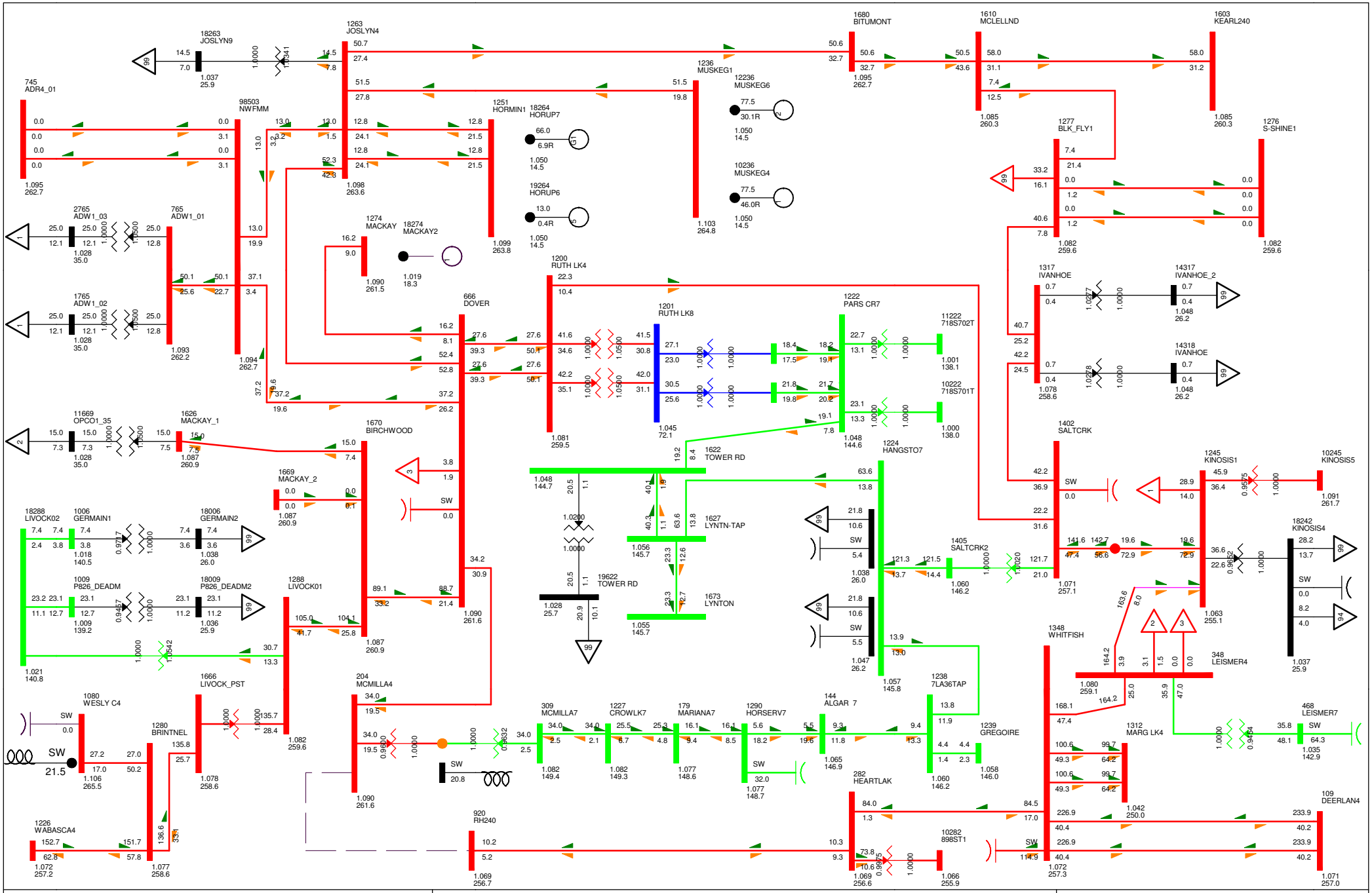
18263 JOSLYN9
1263 JOSLYN4
1680 BITUMONT
1610 MCLELLND
1603 KEARL240
745 ADR4_01
98503 NWFMM
1236 MUSKEG1
12236 MUSKEG6
10236 MUSKEG4
1251 HORMIN1
18264 HORUP7
19264 HORUP6
1277 BLK_FLY1
1276 S-SHINE1
2765 ADW1_03
765 ADW1_01
1765 ADW1_02
1274 MACKAY
18274 MACKAY2
1200 RUTH LK4
666 DOVER
1201 RUTH LK8
1222 PARS CR7
11222 718S702T
10222 718S701T
1317 IVANHOE
14317 IVANHOE_2
14318 IVANHOE
11669 OPCO1_35
1626 MACKAY_1
1670 BIRCHWOOD
1669 MACKAY_2
1622 TOWER RD
1224 HANGSTO7
1402 SALTCRK
1245 KINOSIS1
10245 KINOSIS5
18242 KINOSIS4
18288 LIVOCK02
1006 GERMAIN1
18006 GERMAIN2
1009 P826_DEADM
18009 P826_DEADM2
1288 LIVOCK01
1627 LYNTN-TAP
19622 TOWER RD
1673 LYNTON
1405 SALTCRK2
1348 WHITFISH
348 LEISMER4
1080 WESLY C4
1666 LIVOCK_PST
1280 BRINTNEL
204 MCMILLA4
309 MCMILLA7
1227 CROWLK7
179 MARIANA7
1290 HORSERV7
144 ALGAR 7
1238 7LA36TAP
1239 GREGOIRE
282 HEARTLAK
1312 MARG LK4
468 LEISMER7
109 DEERLAN4
1226 WABASCA4
920 RH240
10282 898ST1
SW
21.5
BC - Alberta (IMPORT)789.7 MW
2012WP BASE CASE
SWINGBUS 1520 FOR FC-2009-5:2013-04-30:19:24--1--1-0-0
MON, AUG 15 2011 15:31
NW FMM STUDY
Figure E-2013WP-18
Bus - VOLTAGE (kV/PU)
Branch - MW/Mvar
Equipment - MW/Mvar
100.0%RATEB
1.120OV 0.950UV
kV: <=34.500 <=69.000 <=138.000 <=240.000 <=500.000 >500.000

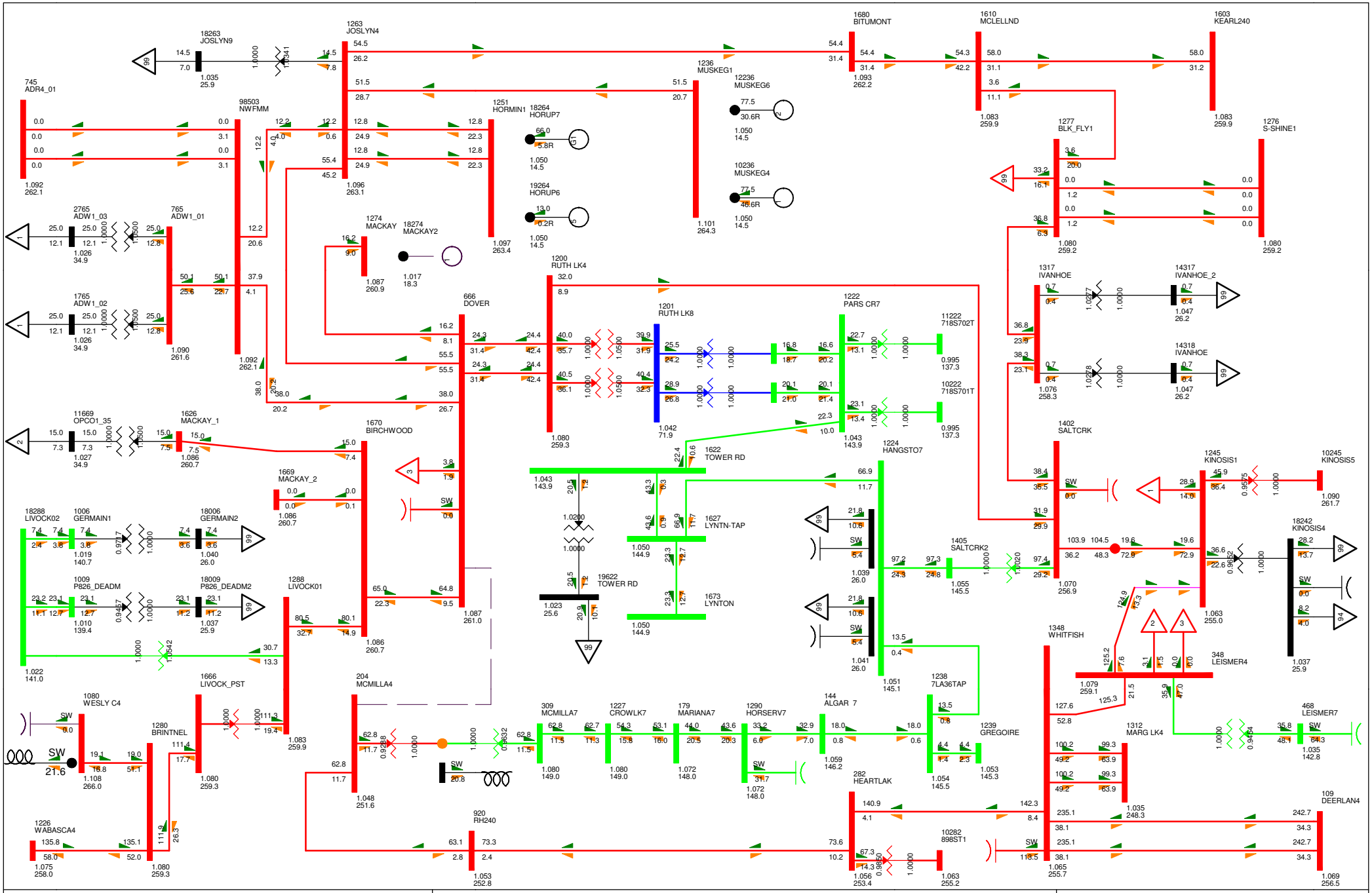

BC - Alberta (IMPORT)788.2 MW

2012WP BASE CASE
SWINGBUS 1520 FOR FC-2009-5:2013-04-30:19:24--1--1-0-0
MON, AUG 15 2011 15:31

NW FMM STUDY

Figure E-2013WP-19

Bus - VOLTAGE (kV/PU)
Branch - MW/Mvar
Equipment - MW/Mvar
100.0%RATEB
1.120OV 0.950UV
kV: <=34.500 <=69.000 <=138.000 <=240.000 <=500.000 >500.000

Table E-3 Power Flow Analysis Summary- 2014 Summer Peak with NW FMM

Figure Number	Contingency	Thermal Violation	Voltage Violation
Figure E-2014SP-1	Base Case (N - 0)	None	None
Figure E-2014SP-2	Open 9L56 240kV line (WABASCA 720S to Brintnell 876S)	None	None
Figure E-2014SP-3	Open 9L15 240kV line (WESLEYCREEK 834S to Brintnell 876S	None	None
Figure E-2014SP-4	Open 9L10 240kV line (Brintnell 876S to Livock 939S)	None	None
Figure E-2014SP-5	Open 9L57 240kV line (Livock 939S to Birchwood Creek 960S)	None	None
Figure E-2014SP-6	Open 9L57 240kV line (Birchwood Creek 960S to Dover 888S)	None	None
Figure E-2014SP-7	Open 9L09 240kV line (Dover 888S to Joslyn Creek 849S)	None	None
Figure E-2014SP-8	Open a 240kV line (FWFMM to to Dover 888S)	None	None
Figure E-2014SP-9	Open a 240kV line (FWFMM to to Joslyn Creek 849S)	None	None
Figure E-2014SP-10	Open 9L32 240kV line (Joslyn Creek 849S to Bitumont 941S)	None	None
Figure E-2014SP-11	Open 9L01 240kV line (Dover 888S to Ruth Lake 848S)	None	None
Figure E-2014SP-12	Open 9L23 240kV line (Ruth Lake 848S to Salt Creek 977S)	None	None
Figure E-2014SP-13	Open 9L990 240kV line (Salt Creek 977S to Kinosis 856S)	None	None
Figure E-2014SP-14	Open 9L990 240kV line (Kinosis 856S to Leismer 72S)	None	None
Figure E-2014SP-15	Open 9L930 240kV line (Leismer 72S to Whitefish Lake 825S)	None	None
Figure E-2014SP-16	Open 9L22 240kV line (Whitefish Lake 825S to Heart Lake 898S)	None	None
Figure E-2014SP-17	Open 9L55 240kV line (Heart Lake 898S to RoundHill POD)	None	None
Figure E-2014SP-18	Open 9L55 240kV line (RoundHill POD to McMillan 885S)	None	None
Figure E-2014SP-19	Open 9L07 240kV line (McMillan 885S TO Dover 888S)	None	None

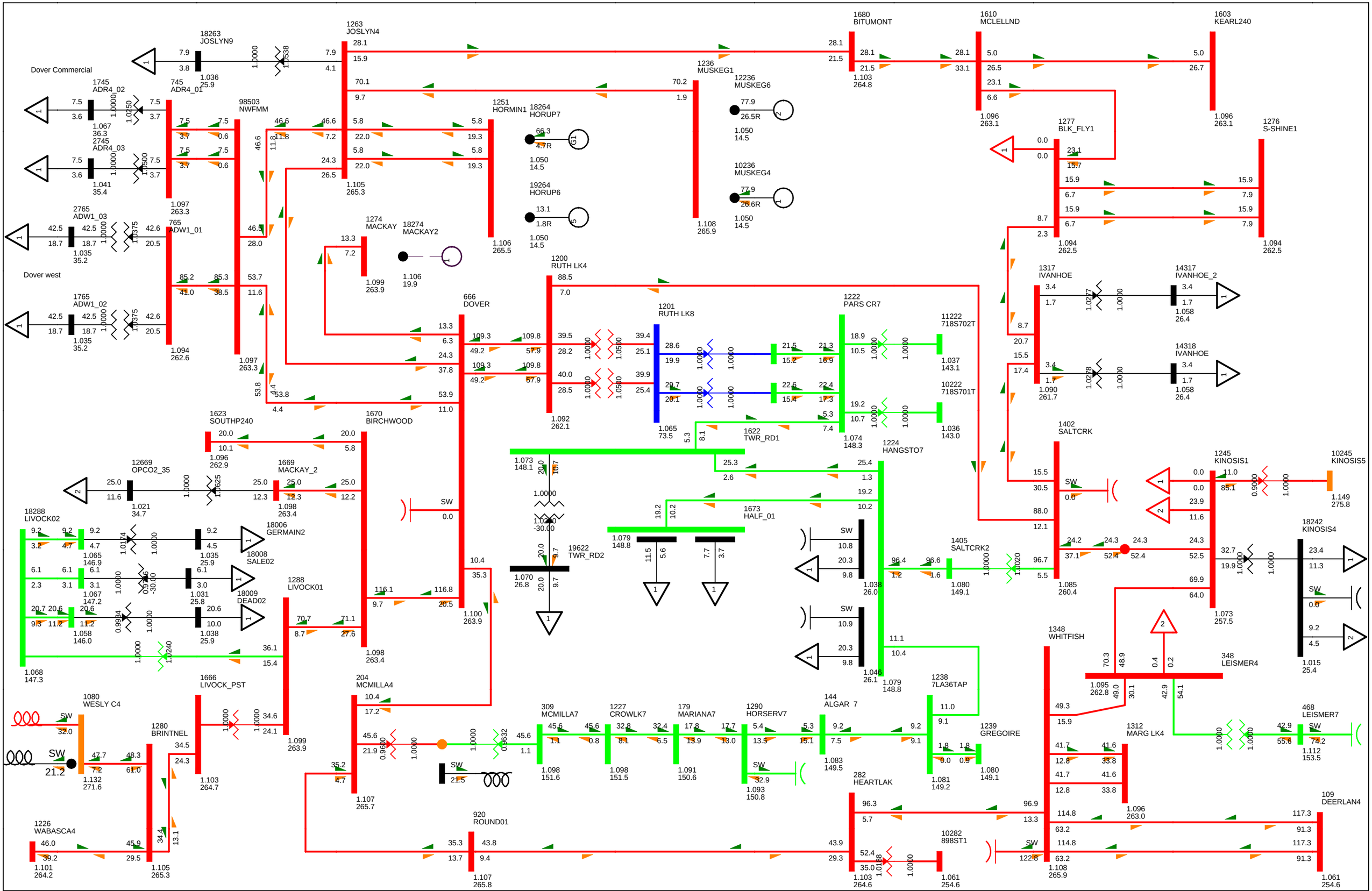

BC - Alberta (IMPORT)795.5 MW

2014SP BASE CASE
SWINGBUS 1520 FOR FC-2009-5:2016-04-30:19:24--1--1-0-0
WED, JUL 27 2011 8:51

NW FMM STUDY

Figure E-2014SP-1

Bus - VOLTAGE (kV/PU)
Branch - MW/Mvar
Equipment - MW/Mvar
100.0%RATEA
1.120OV0.950UV
kV: <=34.500 <=69.000 <=138.000 <=240.000 <=500.000 >500.000

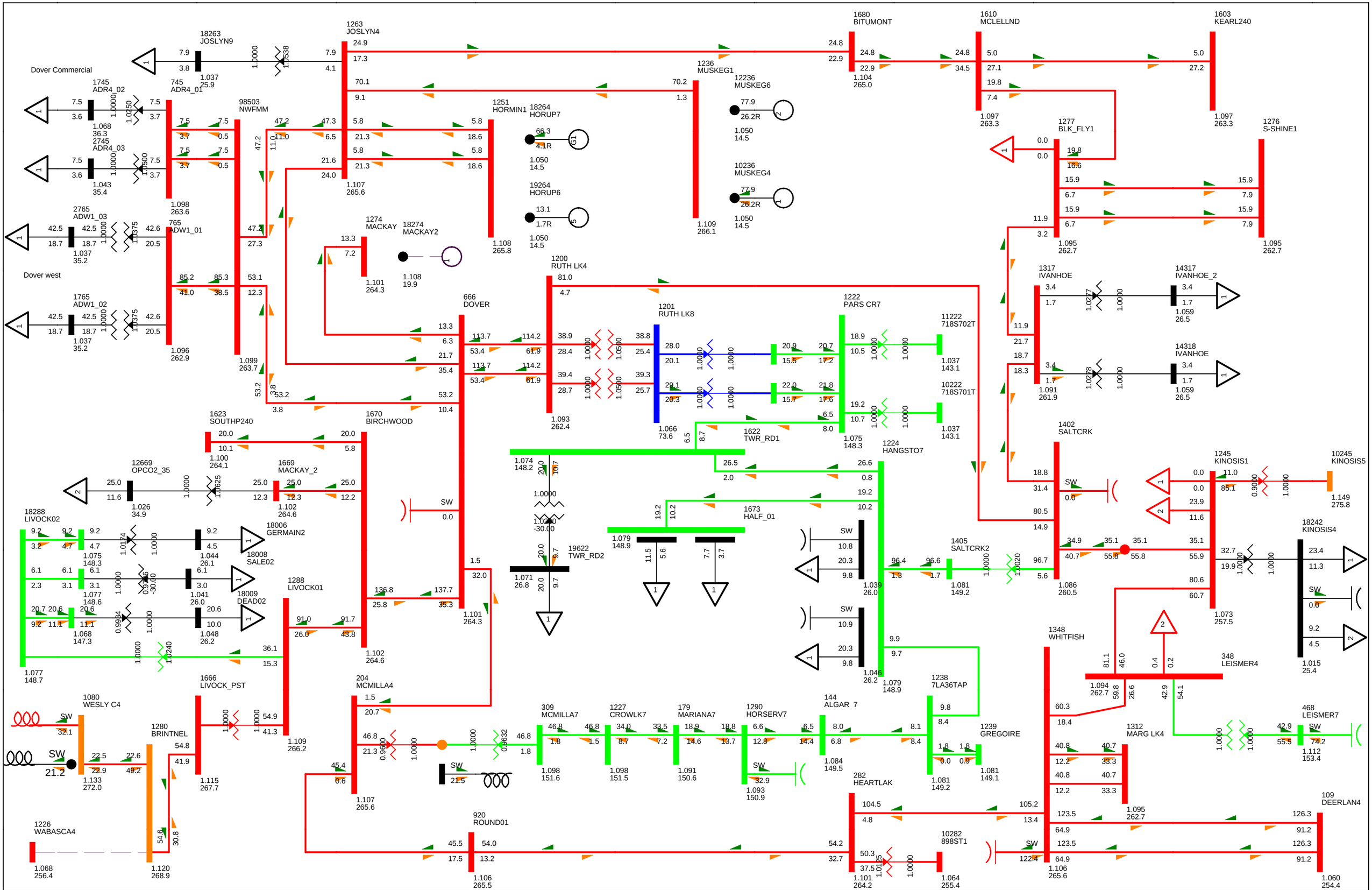

BC - Alberta (IMPORT)797.1 MW

2014SP BASE CASE
SWINGBUS 1520 FOR FC-2009-5:2016-04-30:19:24--1--1-0-0
WED, JUL 27 2011 8:51

NW FMM STUDY

Figure E-2014SP-2

Bus - VOLTAGE (kV/PU)
Branch - MW/Mvar
Equipment - MW/Mvar
100.0%RATEA
1.120OV0.950UV
kV: <=34.500 <=69.000 <=138.000 <=240.000 <=500.000 >500.000

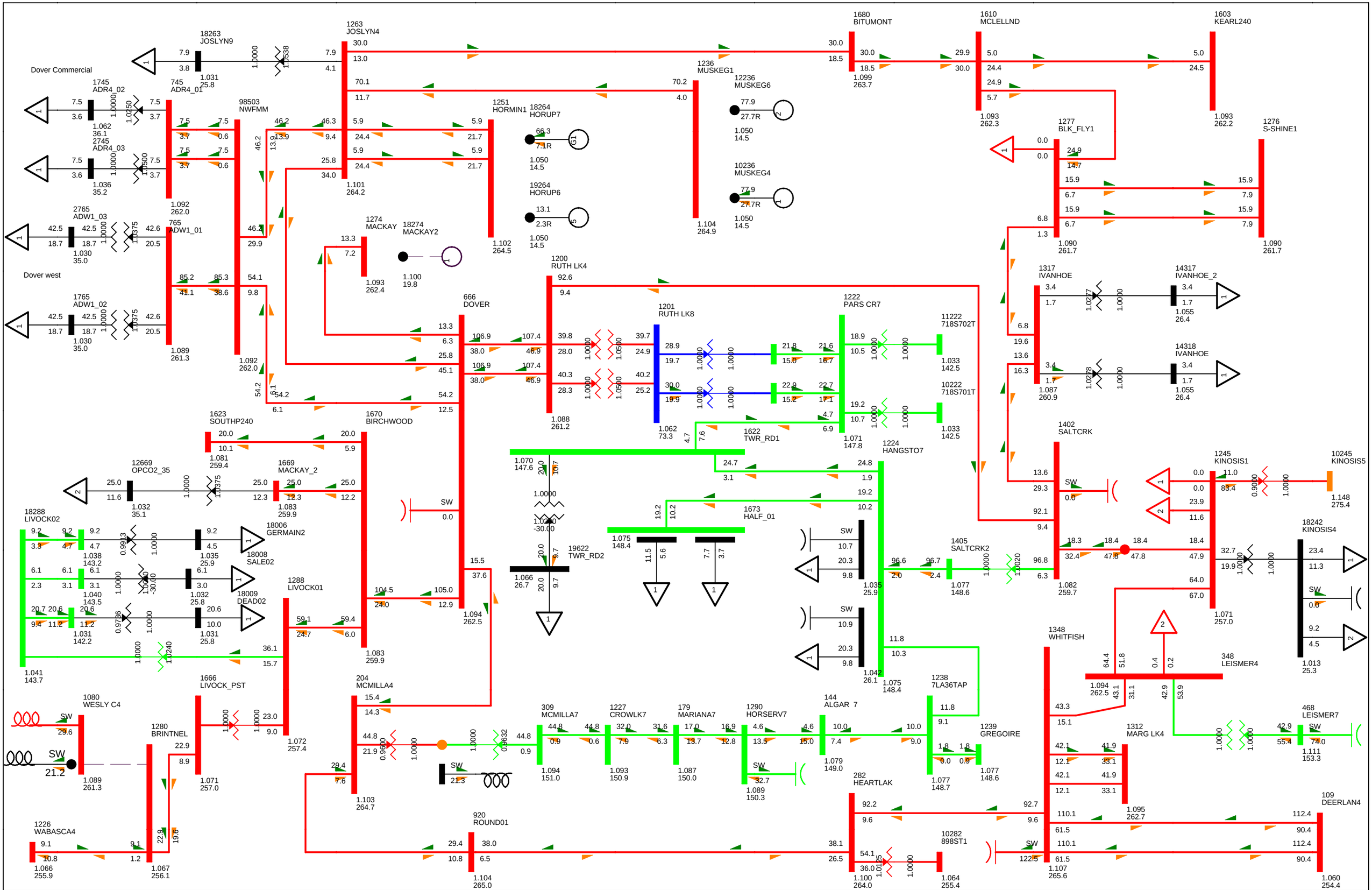

BC - Alberta (IMPORT)798.4 MW

2014SP BASE CASE
SWINGBUS 1520 FOR FC-2009-5:2016-04-30:19:24--1--1-0-0
WED, JUL 27 2011 8:51

NW FMM STUDY

Figure E-2014SP-3

Bus - VOLTAGE (kV/PU)
Branch - MW/Mvar
Equipment - MW/Mvar
100.0%RATEA
1.120OV0.950UV
kV: <=34.500 <=69.000 <=138.000 <=240.000 <=500.000 >500.000

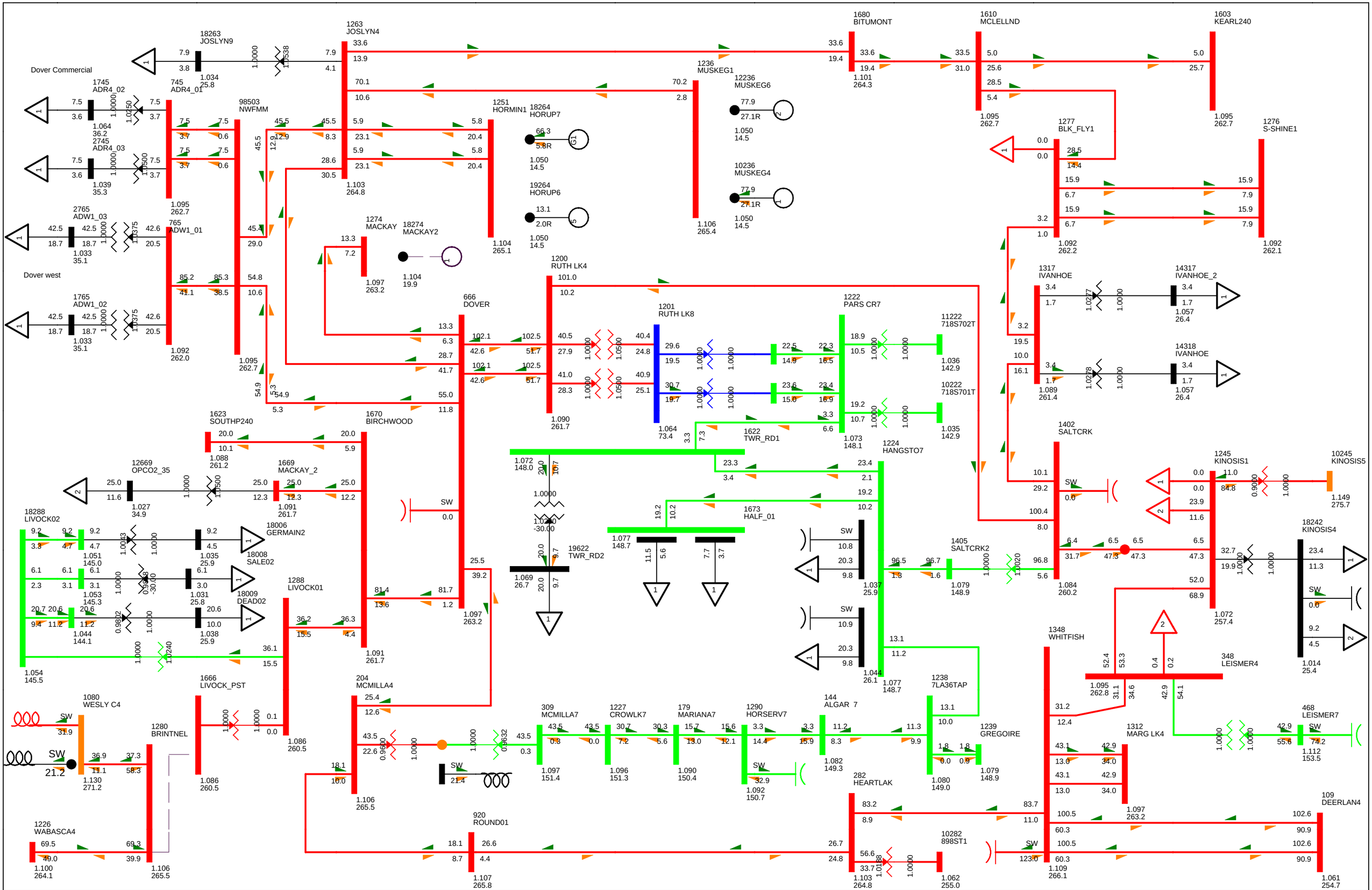

BC - Alberta (IMPORT)797.0 MW

2014SP BASE CASE
SWINGBUS 1520 FOR FC-2009-5:2016-04-30:19:24--1--1-0-0
WED, JUL 27 2011 8:52

NW FMM STUDY

Figure E-2014SP-4

Bus - VOLTAGE (kV/PU)
Branch - MW/Mvar
Equipment - MW/Mvar
100.0%RATEA
1.120OV0.950UV
kV: <=34.500 <=69.000 <=138.000 <=240.000 <=500.000 >500.000

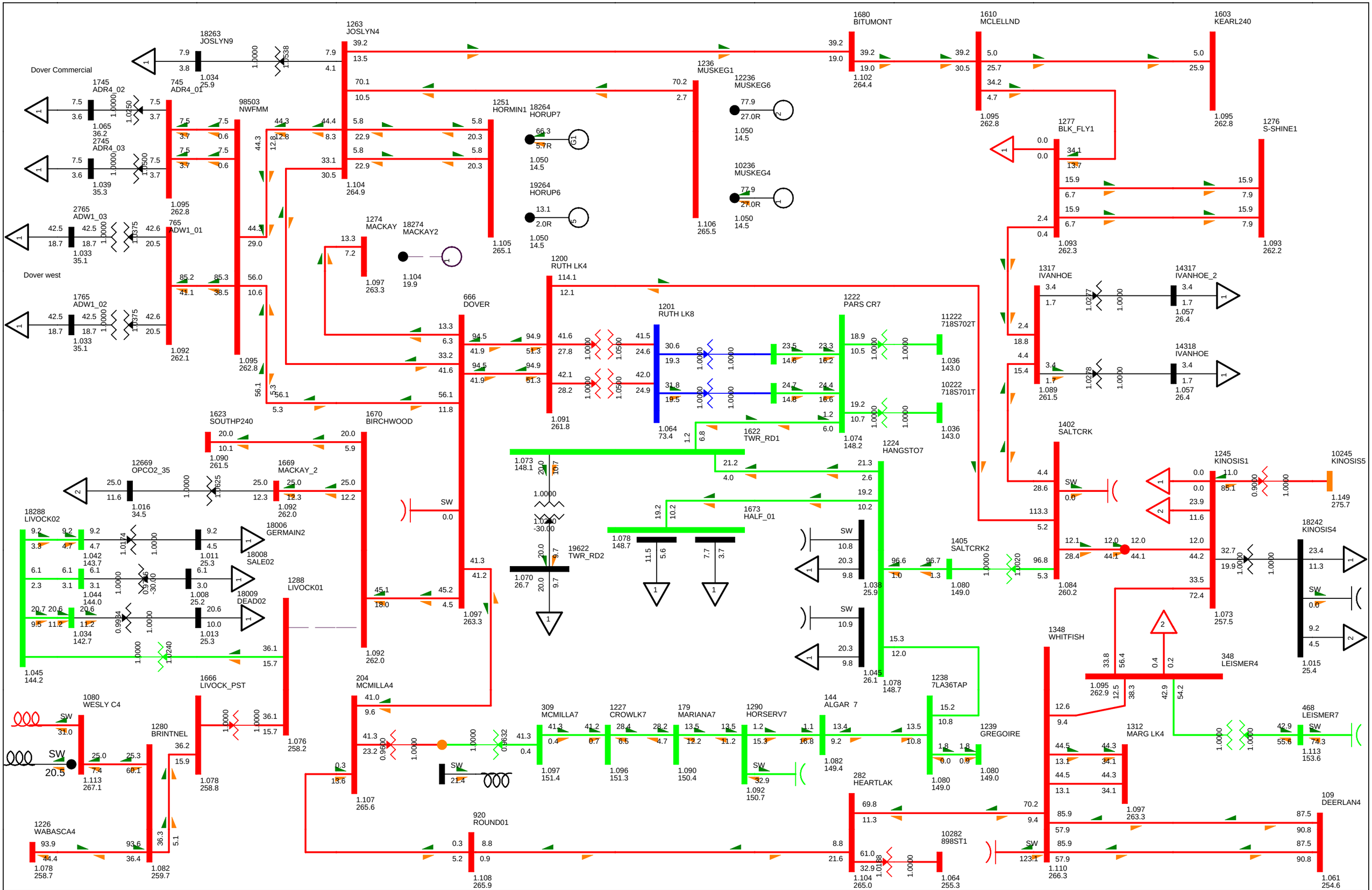
Dover Commercial
Dover west
18263 JOSLYN9
1263 JOSLYN4
1745 ADR4_02
745 ADR4_01
2745 ADR4_03
98503 NWFMM
2765 ADW1_03
765 ADW1_01
1765 ADW1_02
1092 262.1
1095 262.8
1623 SOUTHP240
1090 261.5
1670 BIRCHWOOD
1669 MACKAY_2
1016 34.5
12669 OPCO2_35
1251 HORMIN1
18264 HORUP7
19264 HORUP6
1274 MACKAY
18274 MACKAY2
1097 263.3
1104 19.9
1105 265.1
1104 264.9
1236 MUSKEG1
1106 265.5
12236 MUSKEG6
10236 MUSKEG4
1680 BITUMONT
1102 264.4
1610 MCLELLND
1095 262.8
1603 KEARL240
1277 BLK_FLY1
1093 262.3
1276 S-SHINE1
1093 262.2
1317 IVANHOE
14317 IVANHOE_2
14318 IVANHOE
1057 26.4
1089 261.5
1402 SALTCRK
1084 260.2
1245 KINOSIS1
1073 257.5
10245 KINOSIS5
1149 275.7
18242 KINOSIS4
1015 25.4
1200 RUTH LK4
1091 261.8
1201 RUTH LK8
1064 73.4
666 DOVER
1222 PARS CR7
1074 148.2
11222 718S702T
10222 718S701T
1036 143.0
1622 TWR_RD1
1224 HANGSTO7
1673 HALF_01
1078 148.7
19622 TWR_RD2
1070 26.7
1073 148.1
1038 25.9
1405 SALTCRK2
1080 149.0
1045 26.1
1348 WHITFISH
348 LEISMER4
1312 MARG LK4
468 LEISMER7
1113 153.6
109 DEERLAN4
1061 254.6
1238 7LA36TAP
1239 GREGOIRE
282 HEARTLAK
1104 265.0
10282 898ST1
1064 255.3
1110 266.3
1097 263.3
204 MCMILLA4
1107 265.6
309 MCMILLA7
1097 151.4
1227 CROWLK7
1096 151.3
179 MARIANA7
1090 150.4
1290 HORSERV7
1092 150.7
144 ALGAR 7
1082 149.4
1666 LIVOCK_PST
1078 258.8
1076 258.2
1280 BRINTNEL
1113 267.1
1080 WESLY C4
1226 WABASCA4
1078 258.7
1082 259.7
1288 LIVOCK01
1045 144.2
18288 LIVOCK02
1042 143.7
1044 144.0
1034 142.7
1039 35.3
18006 GERMAIN2
18008 SALE02
1011 25.3
18009 DEAD02
1008 25.2
1013 25.3
920 ROUND01
1108 265.9
1092 262.0
1091 261.8
1064 73.4
1090 261.5
1016 34.5
1092 262.0
1097 263.3
1107 265.6
1078 258.8
1076 258.2
1078 258.7
1082 259.7
1045 144.2
1042 143.7
1044 144.0
1034 142.7
1039 35.3
1011 25.3
1008 25.2
1013 25.3
1108 265.9
1104 265.0
1064 255.3
1110 266.3
1097 263.3
1107 265.6
1097 151.4
1096 151.3
1090 150.4
1092 150.7
1082 149.4
1080 149.0
1080 149.0
1038 25.9
1045 26.1
1078 148.7
1073 148.1
1070 26.7
1078 148.7
1064 73.4
1074 148.2
1036 143.0
1036 143.0
1057 26.4
1089 261.5
1084 260.2
1073 257.5
1149 275.7
1015 25.4
1095 262.9
1113 153.6
1061 254.6
1110 266.3
1104 265.0
1064 255.3

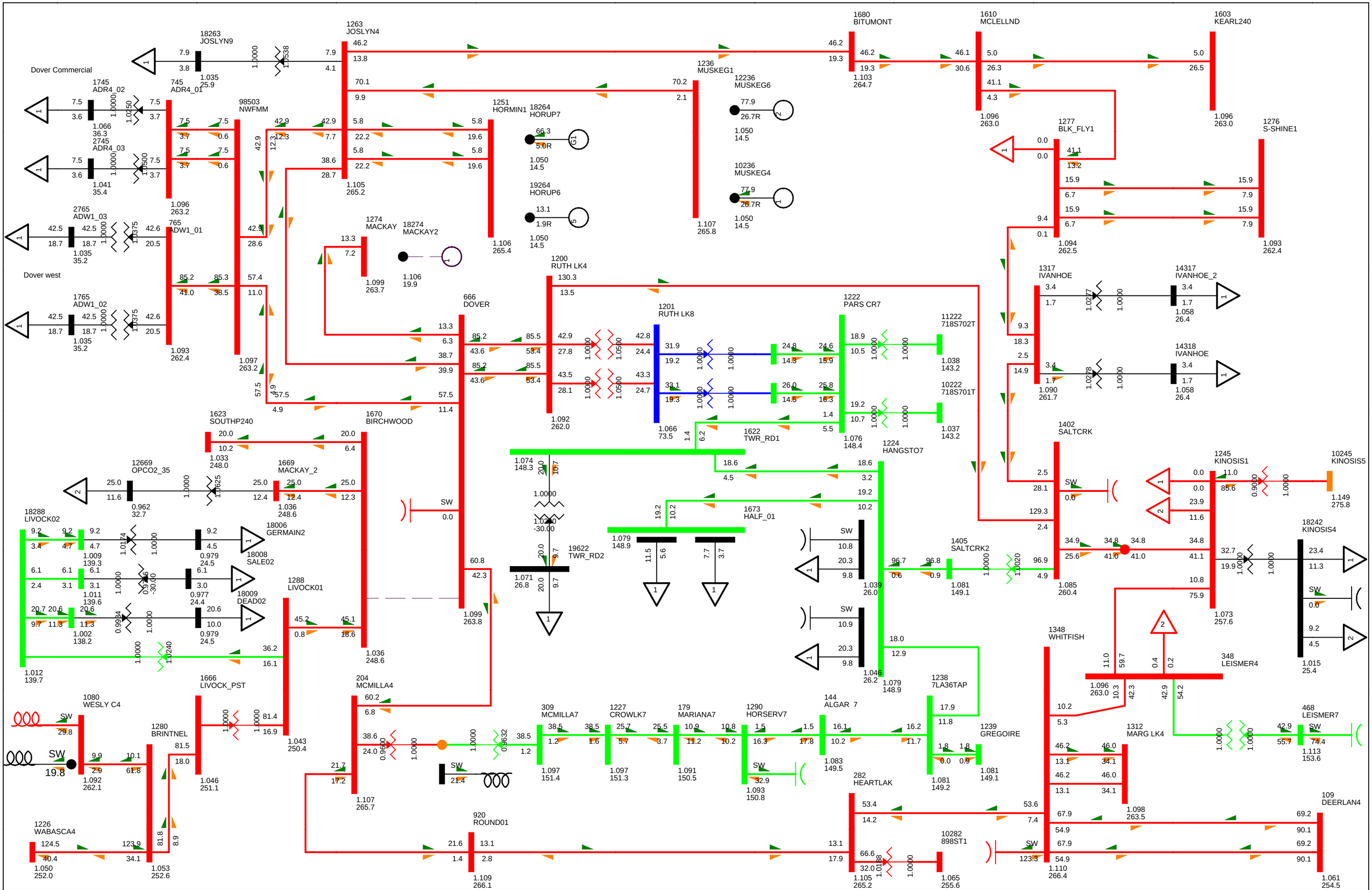

BC - Alberta (IMPORT)809.7 MW

2014SP BASE CASE
SWINGBUS 1520 FOR FC-2009-5:2016-04-30:19:24--1--1-0-0
WED, JUL 27 2011 8:52

NW FMM STUDY

Figure E-2014SP-6

Bus - VOLTAGE (kV/PU)
Branch - MW/Mvar
Equipment - MW/Mvar
100.0%RATEA
1.120OV0.950UV
kV: <=34.500 <=69.000 <=138.000 <=240.000 <=500.000 >500.000

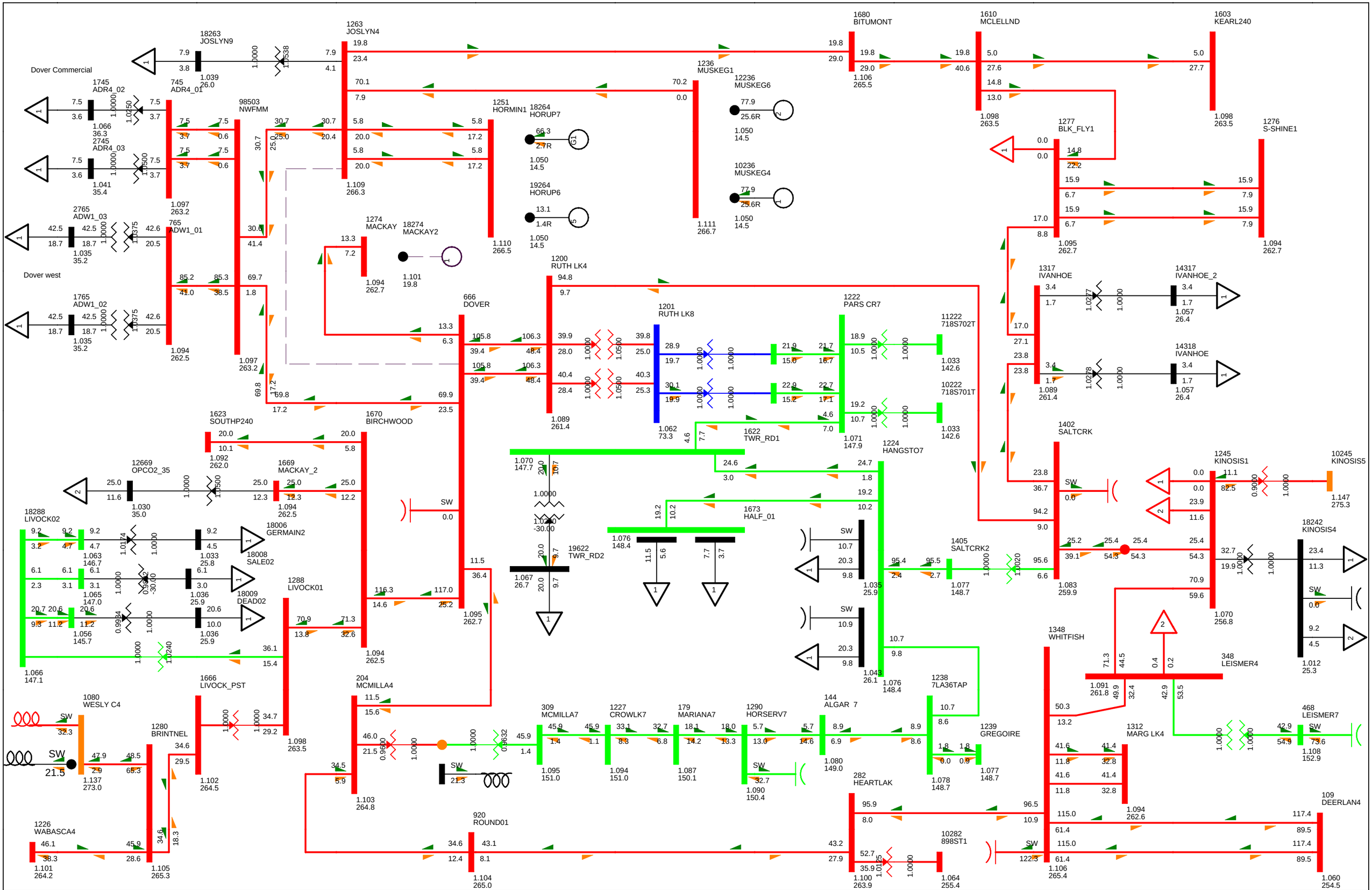

BC - Alberta (IMPORT)794.8 MW

2014SP BASE CASE
SWINGBUS 1520 FOR FC-2009-5:2016-04-30:19:24--1--1-0-0
WED, JUL 27 2011 8:52

NW FMM STUDY

Figure E-2014SP-7

Bus - VOLTAGE (kV/PU)
Branch - MW/Mvar
Equipment - MW/Mvar

100.0%RATEA
1.120OV0.950UV
kV: <=34.500 <=69.000 <=138.000 <=240.000 <=500.000 >500.000

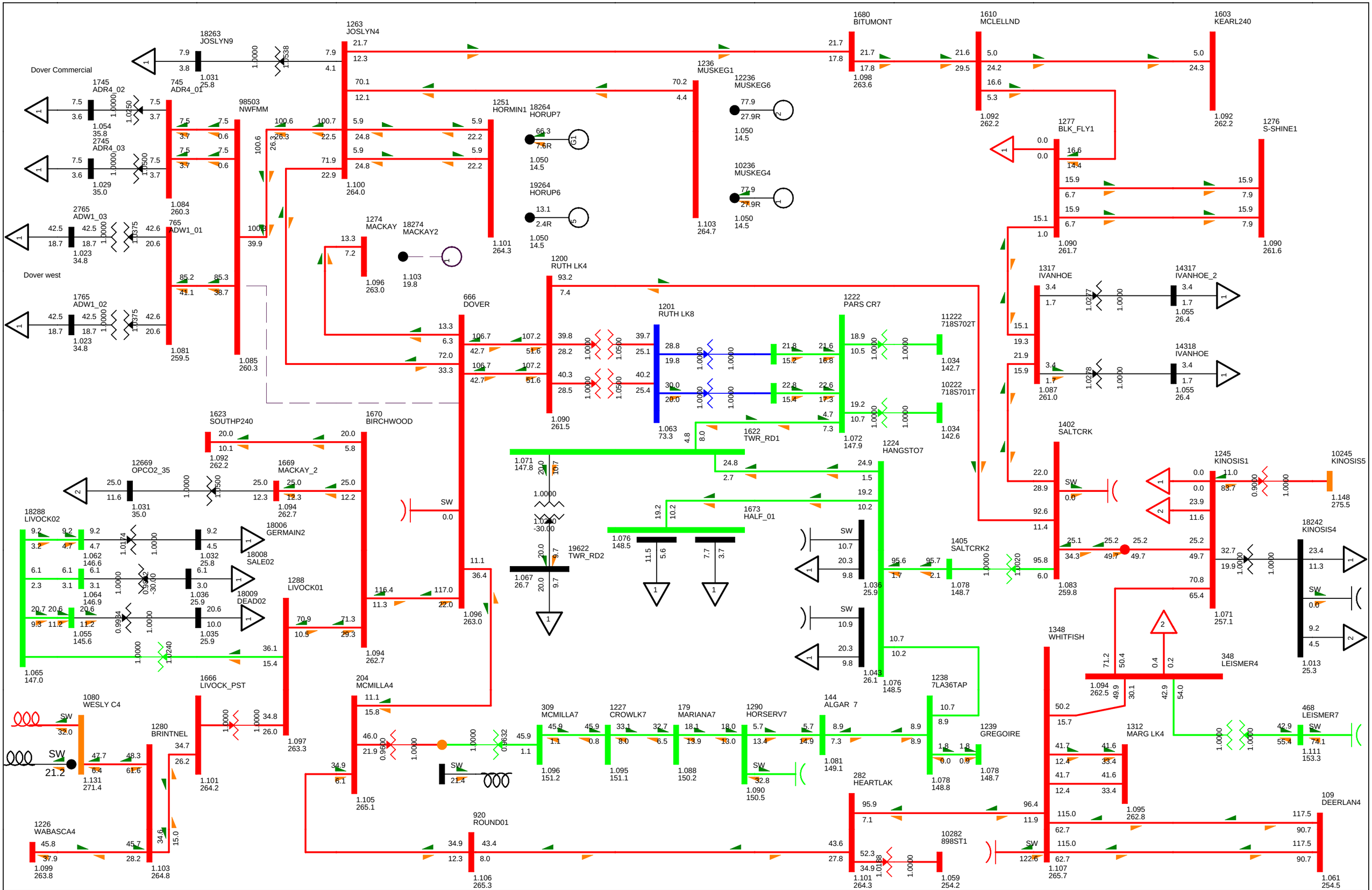

BC - Alberta (IMPORT)795.8 MW

2014SP BASE CASE
SWINGBUS 1520 FOR FC-2009-5:2016-04-30:19:24--1--1-0-0
WED, JUL 27 2011 8:52

NW FMM STUDY

Figure E-2014SP-8

Bus - VOLTAGE (kV/PU)
Branch - MW/Mvar
Equipment - MW/Mvar
100.0%RATEA
1.120OV0.950UV
kV: <=34.500 <=69.000 <=138.000 <=240.000 <=500.000 >500.000

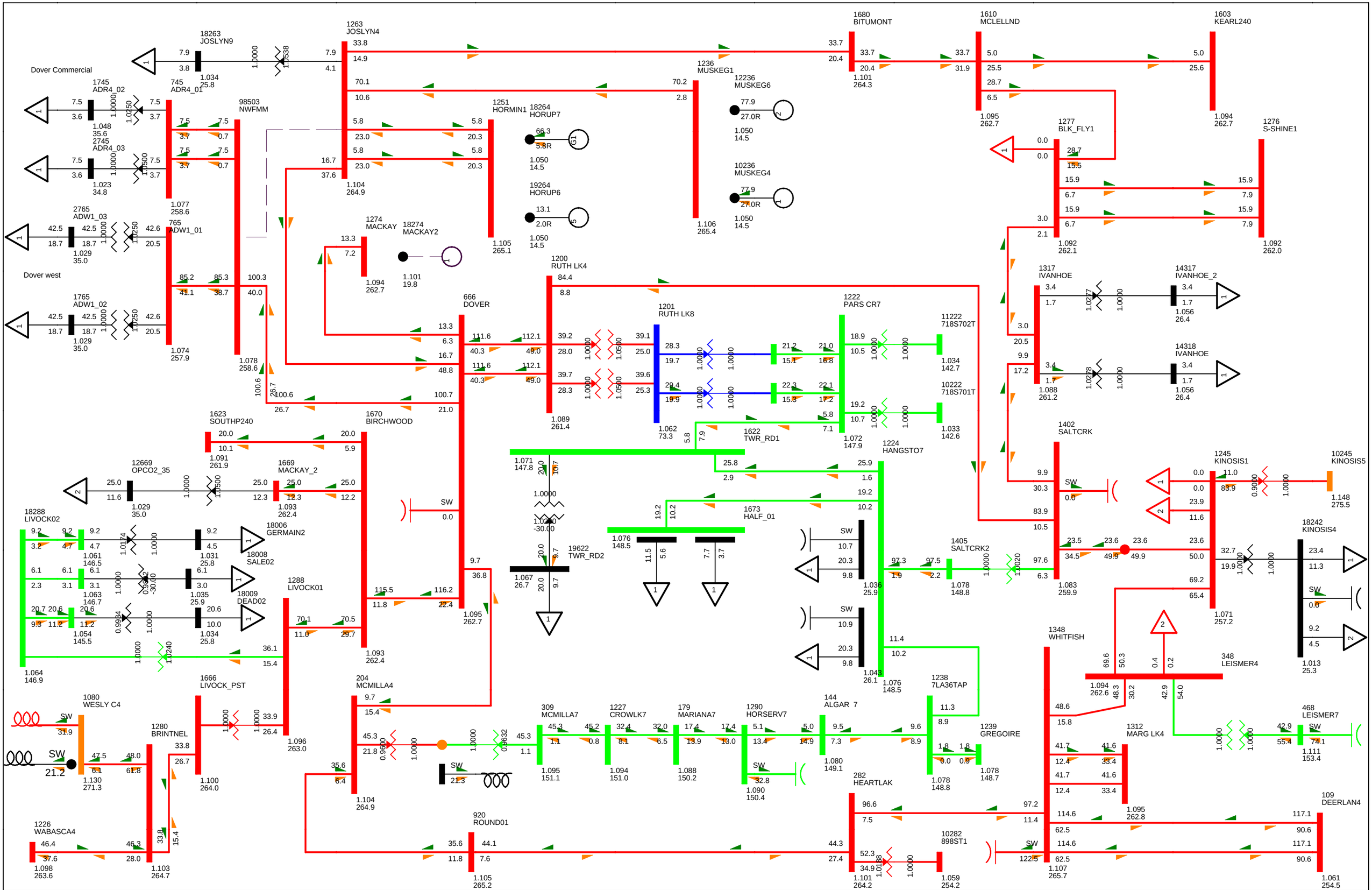

BC - Alberta (IMPORT)795.8 MW

2014SP BASE CASE
SWINGBUS 1520 FOR FC-2009-5:2016-04-30:19:24--1--1-0-0
WED, JUL 27 2011 8:52

NW FMM STUDY

Figure E-2014SP-9

Bus - VOLTAGE (kV/PU)
Branch - MW/Mvar
Equipment - MW/Mvar

100.0%RATEA
1.120OV0.950UV
kV: <=34.500 <=69.000 <=138.000 <=240.000 <=500.000 >500.000

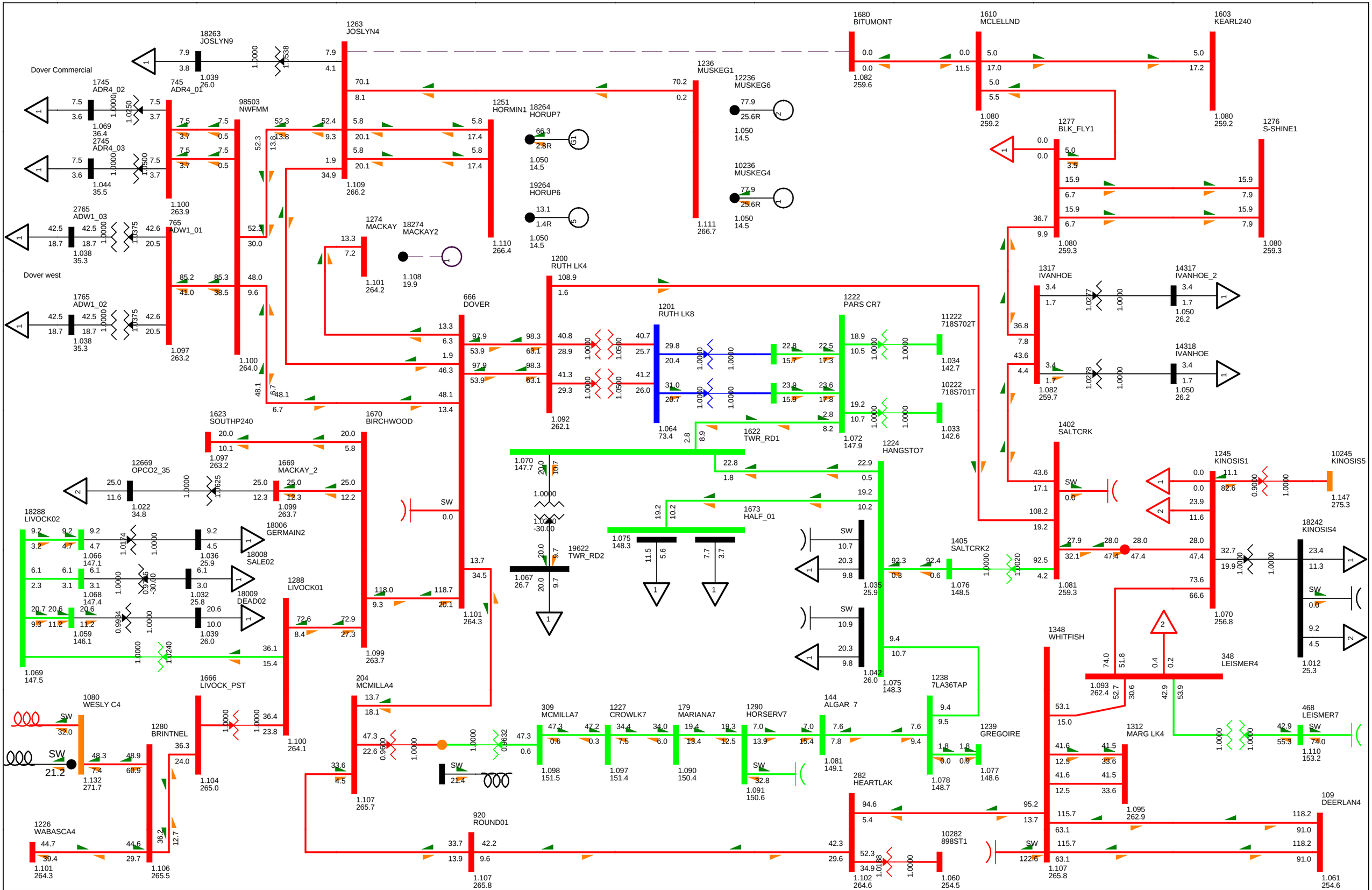

BC - Alberta (IMPORT)795.6 MW

2014SP BASE CASE
SWINGBUS 1520 FOR FC-2009-5:2016-04-30:19:24--1--1-0-0
WED, JUL 27 2011 8:52

NW FMM STUDY

Figure E-2014SP-10

Bus - VOLTAGE (kV/PU)
Branch - MW/Mvar
Equipment - MW/Mvar

100.0%RATEA
1.120OV0.950UV
kV: <=34.500 <=69.000 <=138.000 <=240.000 <=500.000 >500.000

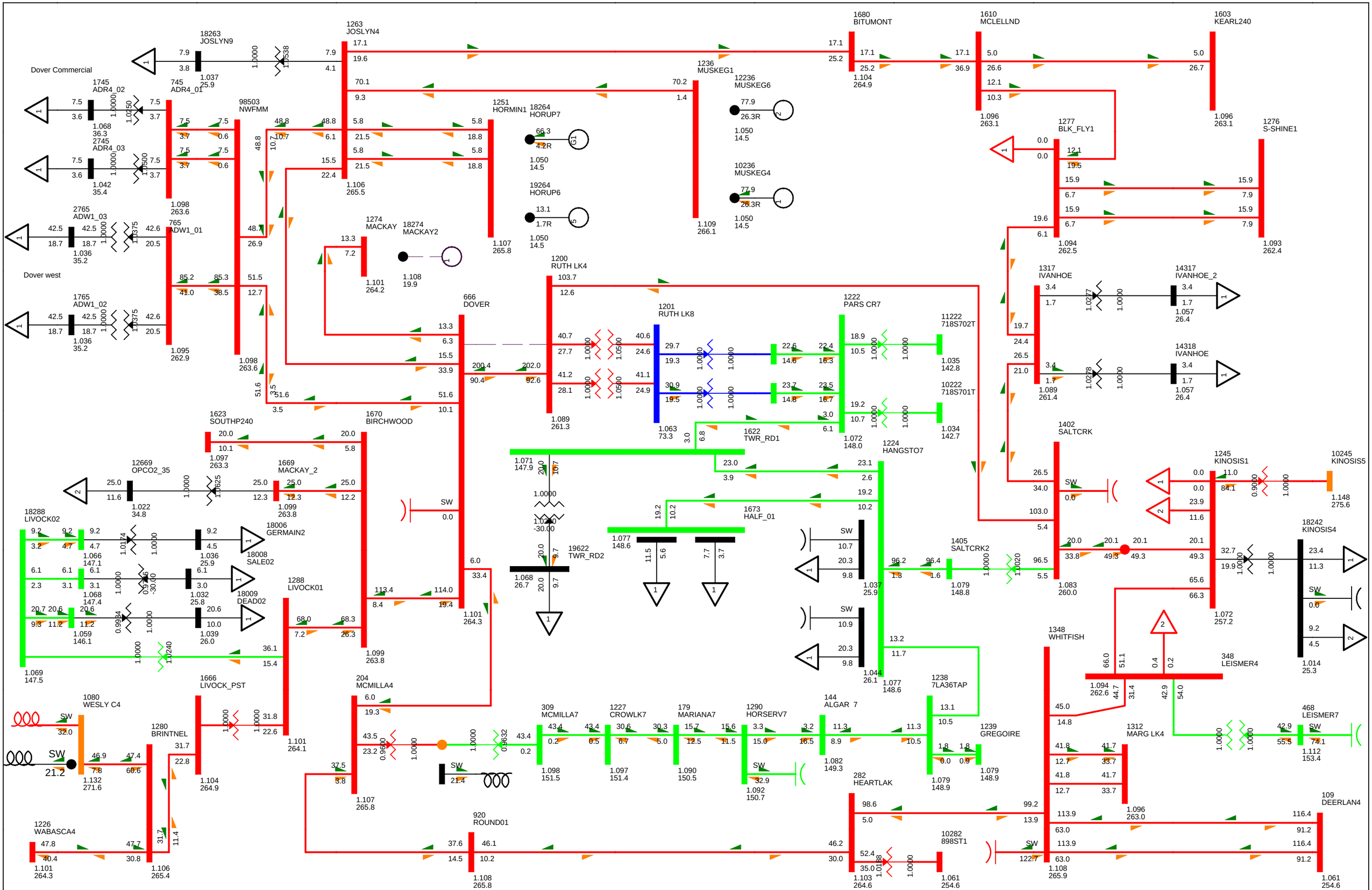

BC - Alberta (IMPORT)796.4 MW

2014SP BASE CASE
SWINGBUS 1520 FOR FC-2009-5:2016-04-30:19:24--1--1-0-0
WED, JUL 27 2011 8:52

NW FMM STUDY

Figure E-2014SP-11

Bus - VOLTAGE (kV/PU)
Branch - MW/Mvar
Equipment - MW/Mvar
100.0%RATEA
1.120OV0.950UV
kV: <=34.500 <=69.000 <=138.000 <=240.000 <=500.000 >500.000

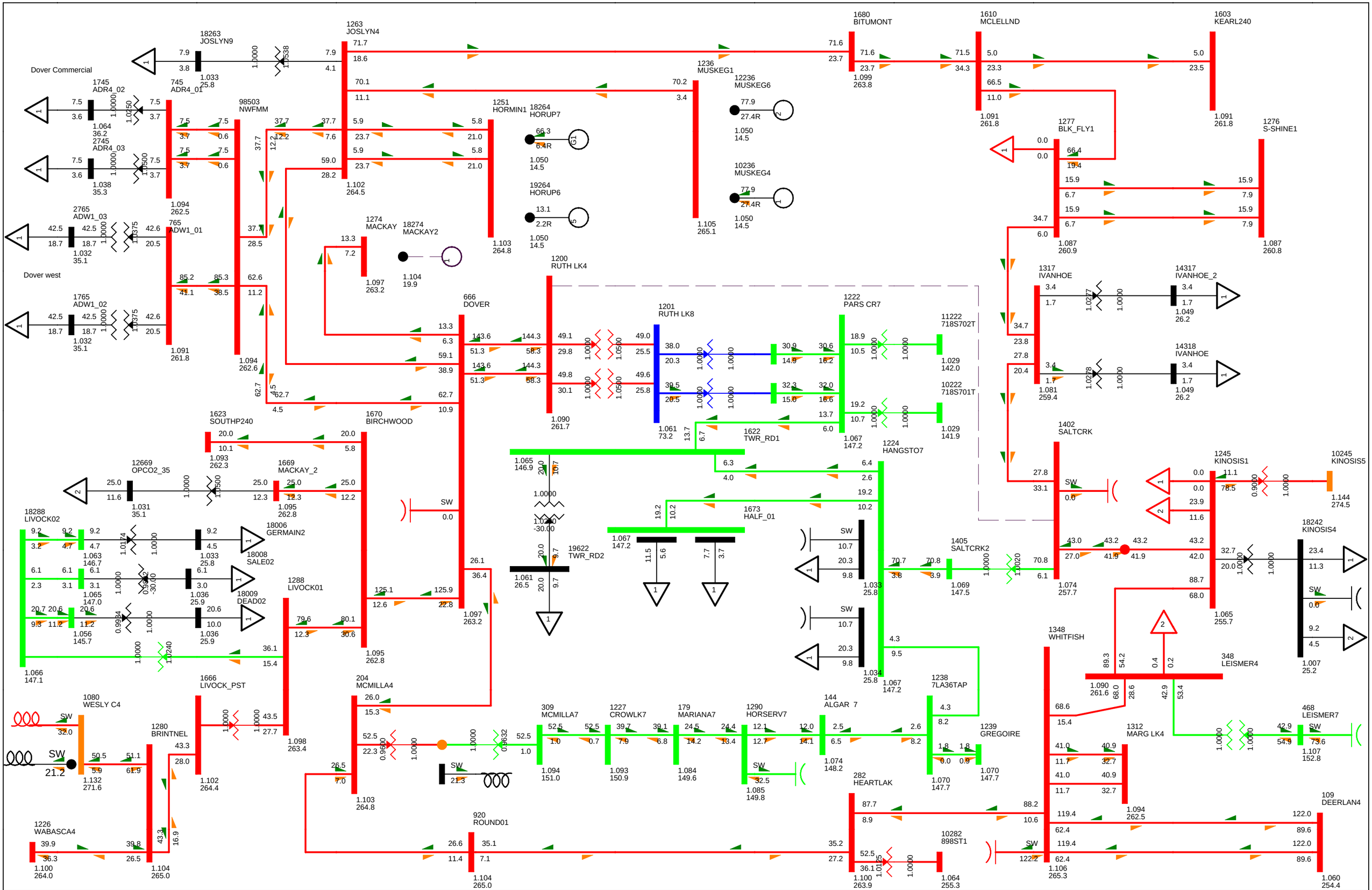

BC - Alberta (IMPORT)796.4 MW

2014SP BASE CASE
SWINGBUS 1520 FOR FC-2009-5:2016-04-30:19:24--1--1-0-0
WED, JUL 27 2011 8:52

NW FMM STUDY

Figure E-2014SP-12

Bus - VOLTAGE (kV/PU)
Branch - MW/Mvar
Equipment - MW/Mvar
100.0%RATEA
1.120OV0.950UV
kV: <=34.500 <=69.000 <=138.000 <=240.000 <=500.000 >500.000

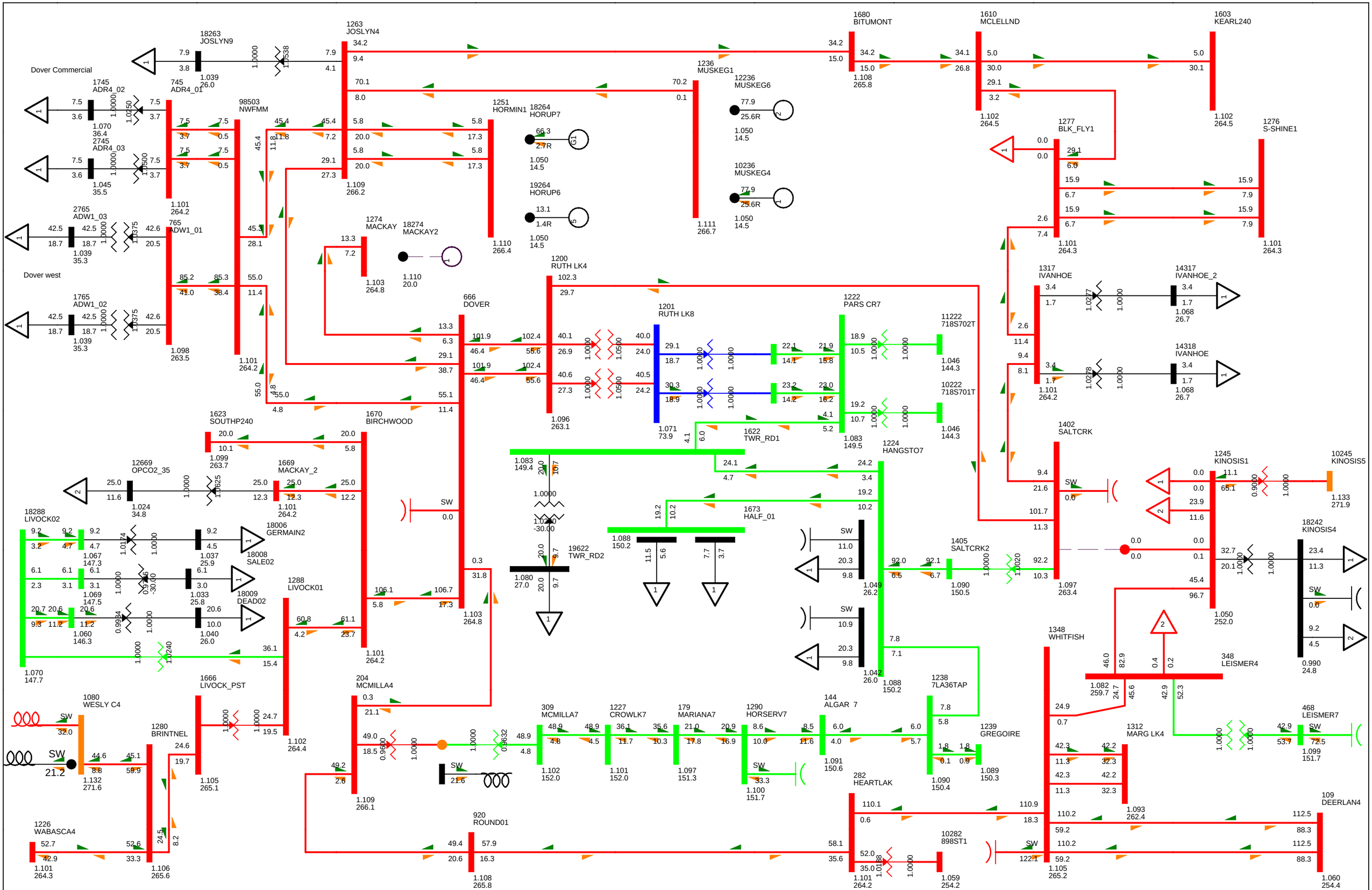

BC - Alberta (IMPORT)795.9 MW

2014SP BASE CASE
SWINGBUS 1520 FOR FC-2009-5:2016-04-30:19:24--1--1-0-0
WED, JUL 27 2011 8:52

NW FMM STUDY

Figure E-2014SP-13

Bus - VOLTAGE (kV/PU)
Branch - MW/Mvar
Equipment - MW/Mvar
100.0%RATEA
1.120OV0.950UV
kV: <=34.500 <=69.000 <=138.000 <=240.000 <=500.000 >500.000

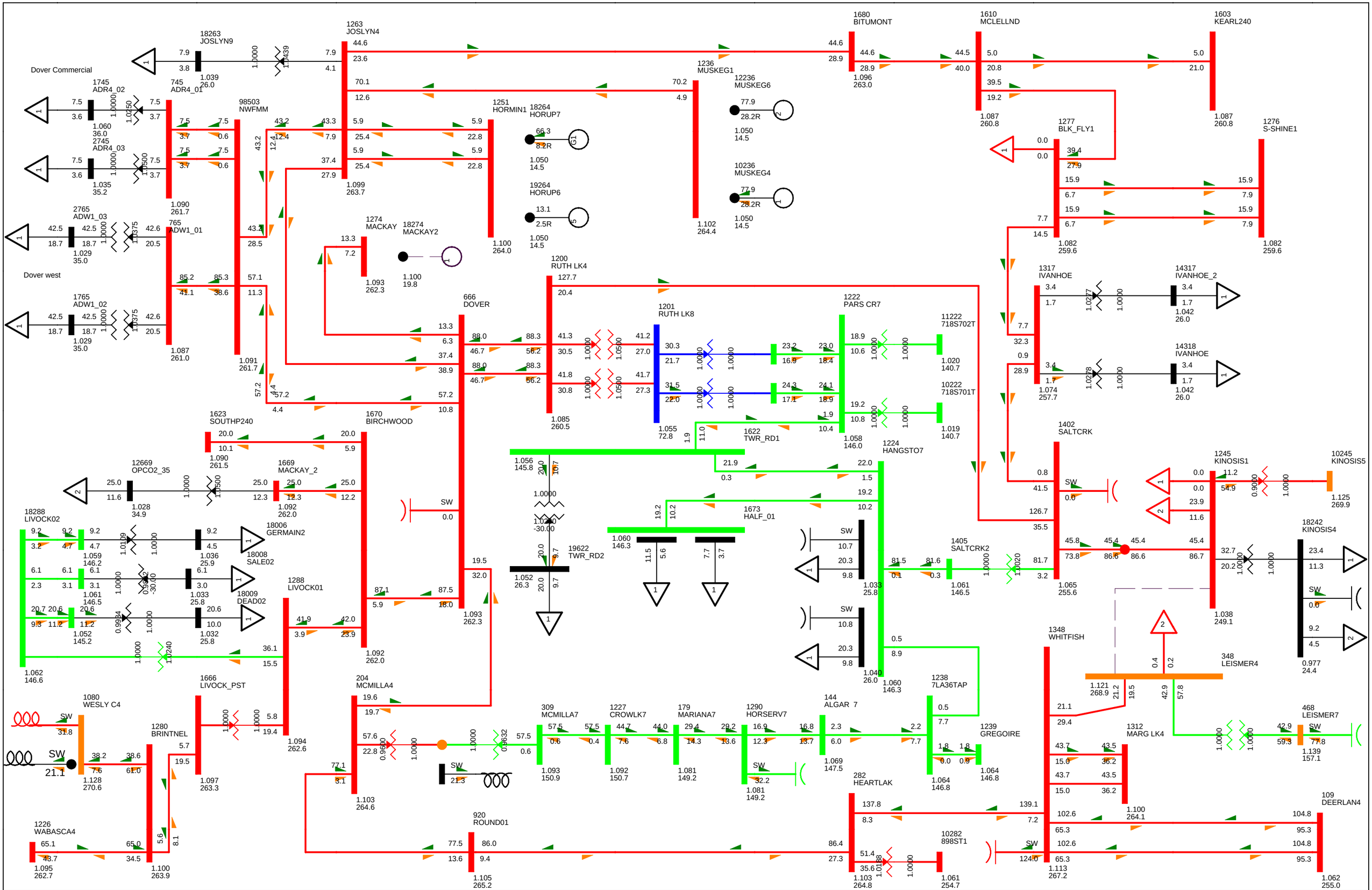

BC - Alberta (IMPORT)799.6 MW

2014SP BASE CASE
SWINGBUS 1520 FOR FC-2009-5:2016-04-30:19:24--1--1-0-0
WED, JUL 27 2011 8:53

NW FMM STUDY

Figure E-2014SP-14

Bus - VOLTAGE (kV/PU)
Branch - MW/Mvar
Equipment - MW/Mvar

100.0%RATEA
1.120OV0.950UV
kV: <=34.500 <=69.000 <=138.000 <=240.000 <=500.000 >500.000

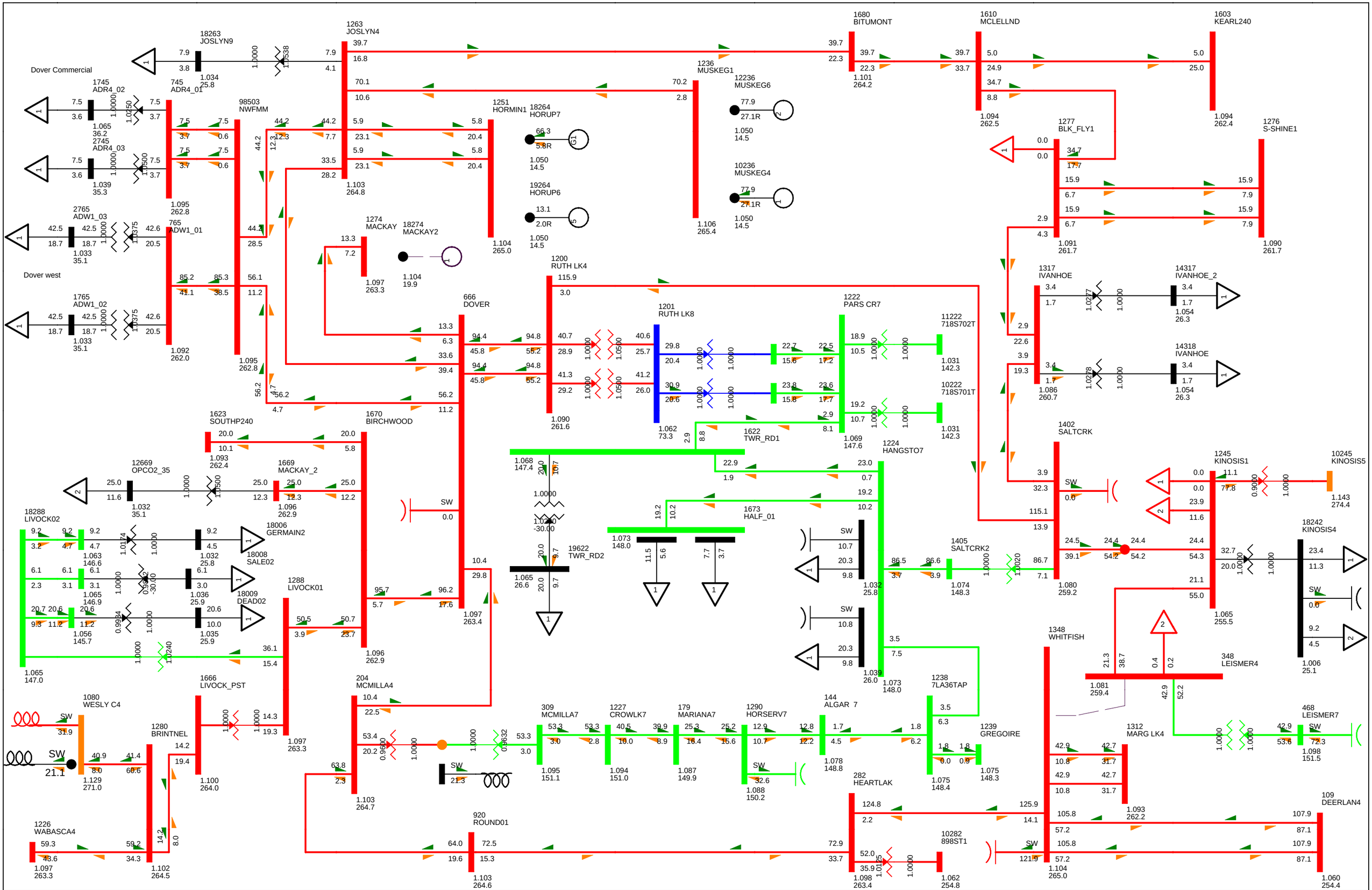
Dover Commercial
Dover west
1745 ADR4_02
2745 ADR4_03
2765 ADW1_03
1765 ADW1_02
745 ADR4_01
765 ADW1_01
18263 JOSLYN9
1263 JOSLYN4
98503 NWFMM
1251 HORMIN1
18264 HORUP7
19264 HORUP6
1236 MUSKEG1
12236 MUSKEG6
10236 MUSKEG4
1680 BITUMONT
1610 MCLELLND
1603 KEARL240
1277 BLK_FLY1
1276 S-SHINE1
1274 MACKAY
18274 MACKAY2
1200 RUTH LK4
1201 RUTH LK8
666 DOVER
1222 PARS CR7
11222 718S702T
10222 718S701T
1622 TWR_RD1
1224 HANGSTO7
1623 SOUTHP240
1670 BIRCHWOOD
12669 OPCO2_35
1669 MACKAY_2
1673 HALF_01
19622 TWR_RD2
1402 SALTCRK
1245 KINOSIS1
10245 KINOSIS5
1317 IVANHOE
14317 IVANHOE_2
14318 IVANHOE
18288 LIVOCK02
18006 GERMAIN2
18008 SALE02
18009 DEAD02
1288 LIVOCK01
1666 LIVOCK_PST
1080 WESLY C4
1280 BRINTNEL
1226 WABASCA4
204 MCMILLA4
920 ROUND01
309 MCMILLA7
1227 CROWLK7
179 MARIANA7
1290 HORSERV7
144 ALGAR 7
282 HEARTLAK
1405 SALTCRK2
1238 7LA36TAP
1239 GREGOIRE
1348 WHITFISH
348 LEISMER4
1312 MARG LK4
468 LEISMER7
109 DEERLAN4
1405 SALTCRK2
18242 KINOSIS4
1086 260.7
1054 26.3
1080 259.2
1065 255.5
1081 259.4
1006 25.1
1098 151.5
1143 274.4
1060 254.4
1104 265.0
1062 254.8
1103 264.6
1097 263.3
1102 264.5
1100 264.0
1129 271.0
1095 262.8
1092 262.0
1096 262.9
1103 264.8
1104 265.0
1106 265.4
1097 263.4
1090 261.6
1062 73.3
1069 147.6
1068 147.4
1065 26.6
1093 262.4
1096 262.9
1032 35.1
1065 147.0
1056 145.7
1063 146.6
1065 146.9
1097 263.3
1103 264.7
1095 151.1
1094 151.0
1087 149.9
1088 150.2
1078 148.8
1075 148.4
1075 148.3
1074 148.3
1073 148.0
1039 26.0
1098 263.4
1093 262.2
1104 265.0
1062 254.8
1060 254.4
1091 261.7
1090 261.7
1094 262.5
1094 262.4
1101 264.2
1054 26.3
1086 260.7
1054 26.3
1080 259.2
1065 255.5
1081 259.4
1006 25.1
1098 151.5
1143 274.4
1060 254.4
1104 265.0
1062 254.8
1103 264.6
1097 263.3
1102 264.5
1100 264.0
1129 271.0
1095 262.8
1092 262.0
1096 262.9
1103 264.8
1104 265.0
1106 265.4
1097 263.4
1090 261.6
1062 73.3
1069 147.6
1068 147.4
1065 26.6
1093 262.4
1096 262.9
1032 35.1
1065 147.0
1056 145.7
1063 146.6
1065 146.9
1097 263.3
1103 264.7
1095 151.1
1094 151.0
1087 149.9
1088 150.2
1078 148.8
1075 148.4
1075 148.3
1074 148.3
1073 148.0
1039 26.0
1098 263.4
1093 262.2

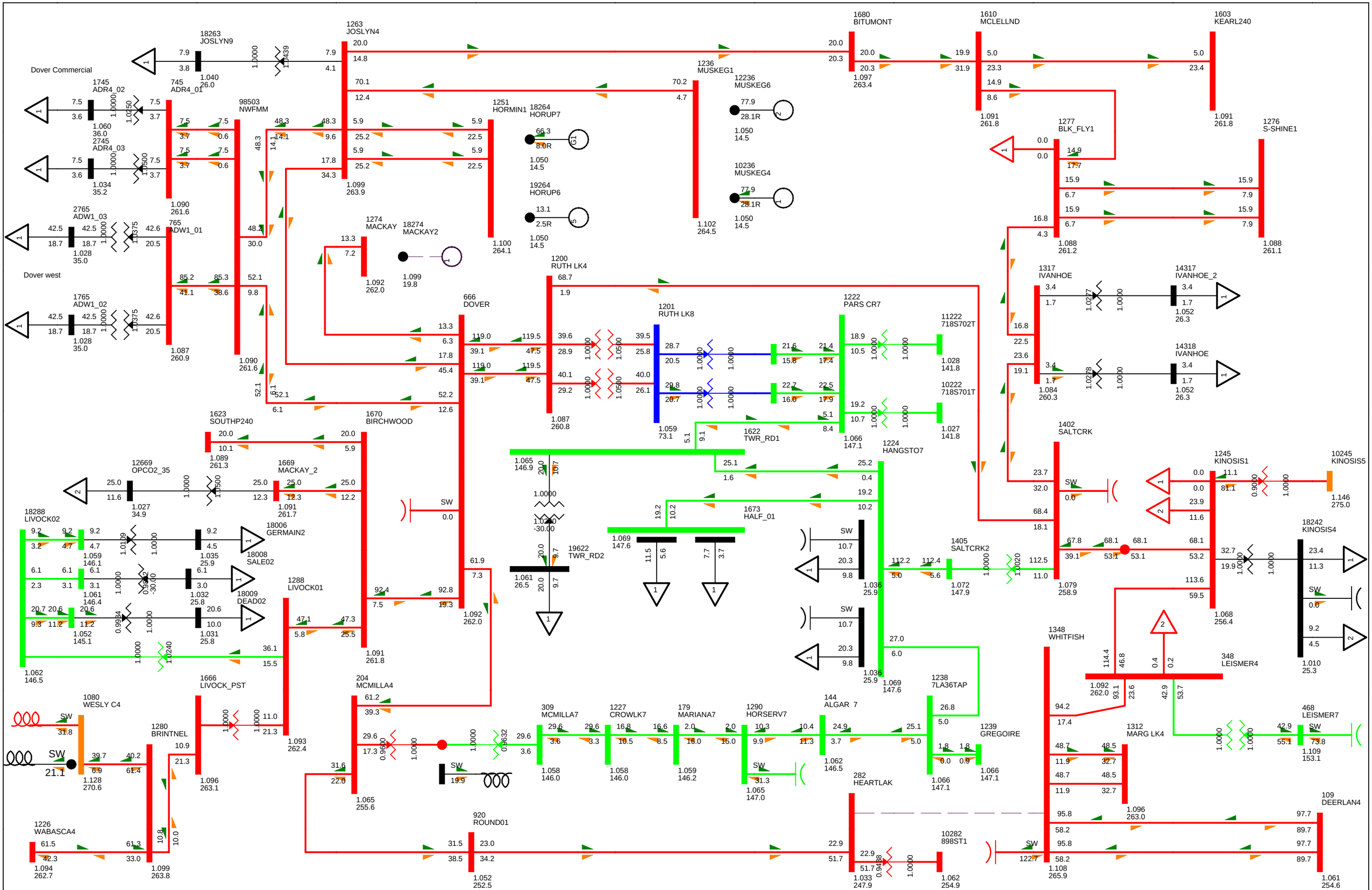

BC - Alberta (IMPORT)802.3 MW

2014SP BASE CASE
SWINGBUS 1520 FOR FC-2009-5:2016-04-30:19:24--1--1-0-0
WED, JUL 27 2011 8:53

NW FMM STUDY

Figure E-2014SP-16

Bus - VOLTAGE (kV/PU)
Branch - MW/Mvar
Equipment - MW/Mvar
100.0%RATEA
1.120OV0.950UV
kV: <=34.500 <=69.000 <=138.000 <=240.000 <=500.000 >500.000

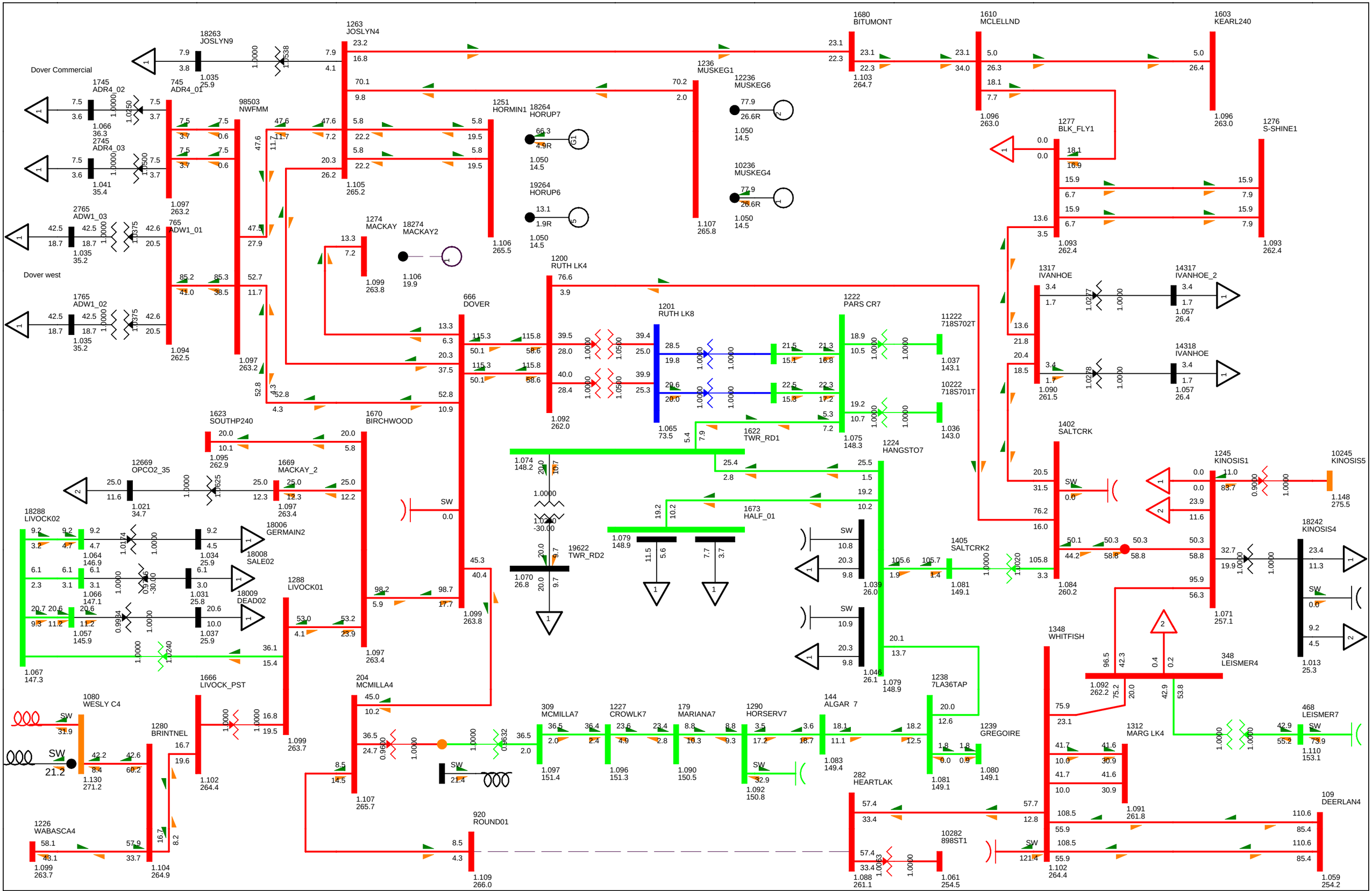

BC - Alberta (IMPORT)796.5 MW

2014SP BASE CASE
SWINGBUS 1520 FOR FC-2009-5:2016-04-30:19:24--1--1-0-0
WED, JUL 27 2011 8:53

NW FMM STUDY

Figure E-2014SP-17

Bus - VOLTAGE (kV/PU)
Branch - MW/Mvar
Equipment - MW/Mvar
100.0%RATEA
1.120OV0.950UV
kV: <=34.500 <=69.000 <=138.000 <=240.000 <=500.000 >500.000

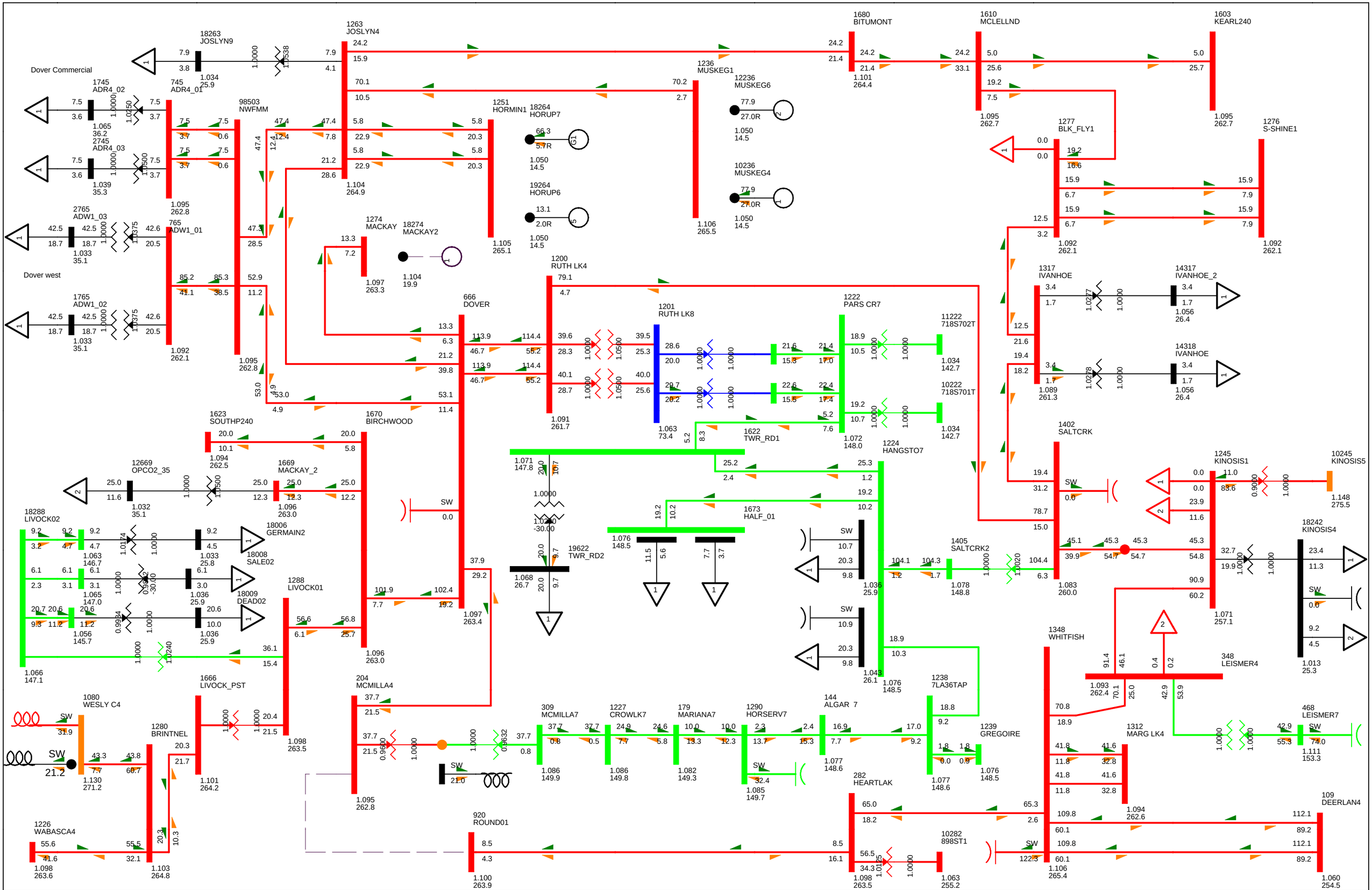

BC - Alberta (IMPORT)796.1 MW

2014SP BASE CASE
SWINGBUS 1520 FOR FC-2009-5:2016-04-30:19:24--1--1-0-0
WED, JUL 27 2011 8:53

NW FMM STUDY

Figure E-2014SP-18

Bus - VOLTAGE (kV/PU)
Branch - MW/Mvar
Equipment - MW/Mvar
100.0%RATEA
1.120OV0.950UV
kV: <=34.500 <=69.000 <=138.000 <=240.000 <=500.000 >500.000

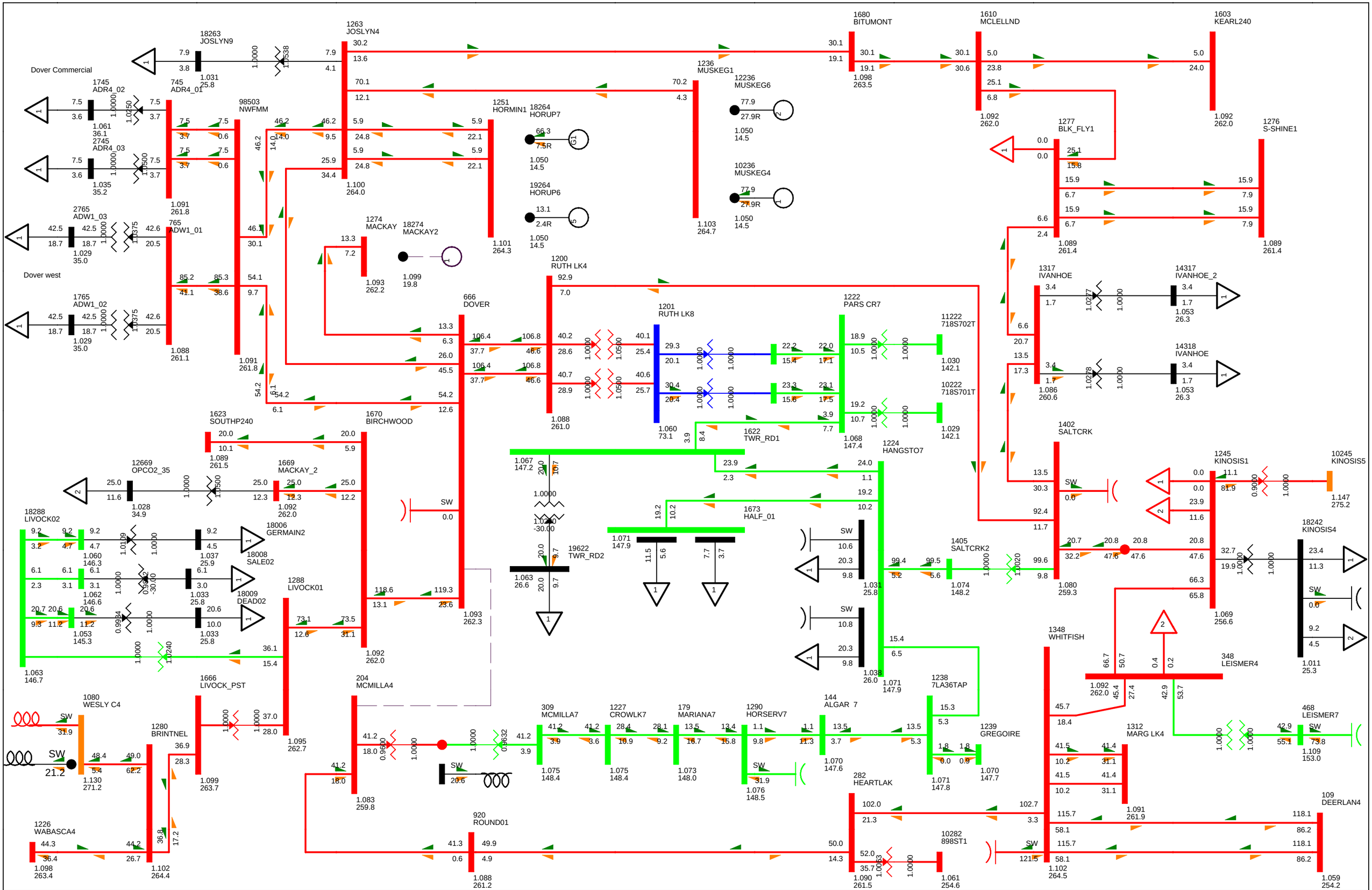

BC - Alberta (IMPORT)795.4 MW

2014SP BASE CASE
SWINGBUS 1520 FOR FC-2009-5:2016-04-30:19:24--1--1-0-0
WED, JUL 27 2011 8:53

NW FMM STUDY

Figure E-2014SP-19

Bus - VOLTAGE (kV/PU)
Branch - MW/Mvar
Equipment - MW/Mvar
100.0%RATEA
1.120OV0.950UV
kV: <=34.500 <=69.000 <=138.000 <=240.000 <=500.000 >500.000

Table E-4 Power Flow Analysis Summary- 2014 Winter Peak with NW FMM

Figure Number	Contingency	Thermal Violation	Voltage Violation
Figure E-2014WP-1	Base Case (N - 0)	None	None
Figure E-2014WP-2	Open 9L56 240kV line (WABASCA 720S to Brintnell 876S)	None	None
Figure E-2014WP-3	Open 9L15 240kV line (WESLEYCREEK 834S to Brintnell 876S	None	None
Figure E-2014WP-4	Open 9L10 240kV line (Brintnell 876S to Livock 939S)	None	None
Figure E-2014WP-5	Open 9L57 240kV line (Livock 939S to Birchwood Creek 960S)	None	None
Figure E-2014WP-6	Open 9L57 240kV line (Birchwood Creek 960S to Dover 888S)	None	None
Figure E-2014WP-7	Open 9L09 240kV line (Dover 888S to Joslyn Creek 849S)	None	None
Figure E-2014WP-8	Open a 240kV line (FWFMM to to Dover 888S)	None	None
Figure E-2014WP-9	Open a 240kV line (FWFMM to to Joslyn Creek 849S)	None	None
Figure E-2014WP-10	Open 9L32 240kV line (Joslyn Creek 849S to Bitumont 941S)	None	None
Figure E-2014WP-11	Open 9L01 240kV line (Dover 888S to Ruth Lake 848S)	None	None
Figure E-2014WP-12	Open 9L23 240kV line (Ruth Lake 848S to Salt Creek 977S)	None	None
Figure E-2014WP-13	Open 9L990 240kV line (Salt Creek 977S to Kinosis 856S)	None	None
Figure E-2014WP-14	Open 9L990 240kV line (Kinosis 856S to Leismer 72S)	None	None
Figure E-2014WP-15	Open 9L930 240kV line (Leismer 72S to Whitefish Lake 825S)	None	None
Figure E-2014WP-16	Open 9L22 240kV line (Whitefish Lake 825S to Heart Lake 898S)	None	None
Figure E-2014WP-17	Open 9L55 240kV line (Heart Lake 898S to RoundHill POD)	None	None
Figure E-2014WP-18	Open 9L55 240kV line (RoundHill POD to McMillan 885S)	None	None
Figure E-2014WP-19	Open 9L07 240kV line (McMillan 885S TO Dover 888S)	None	None

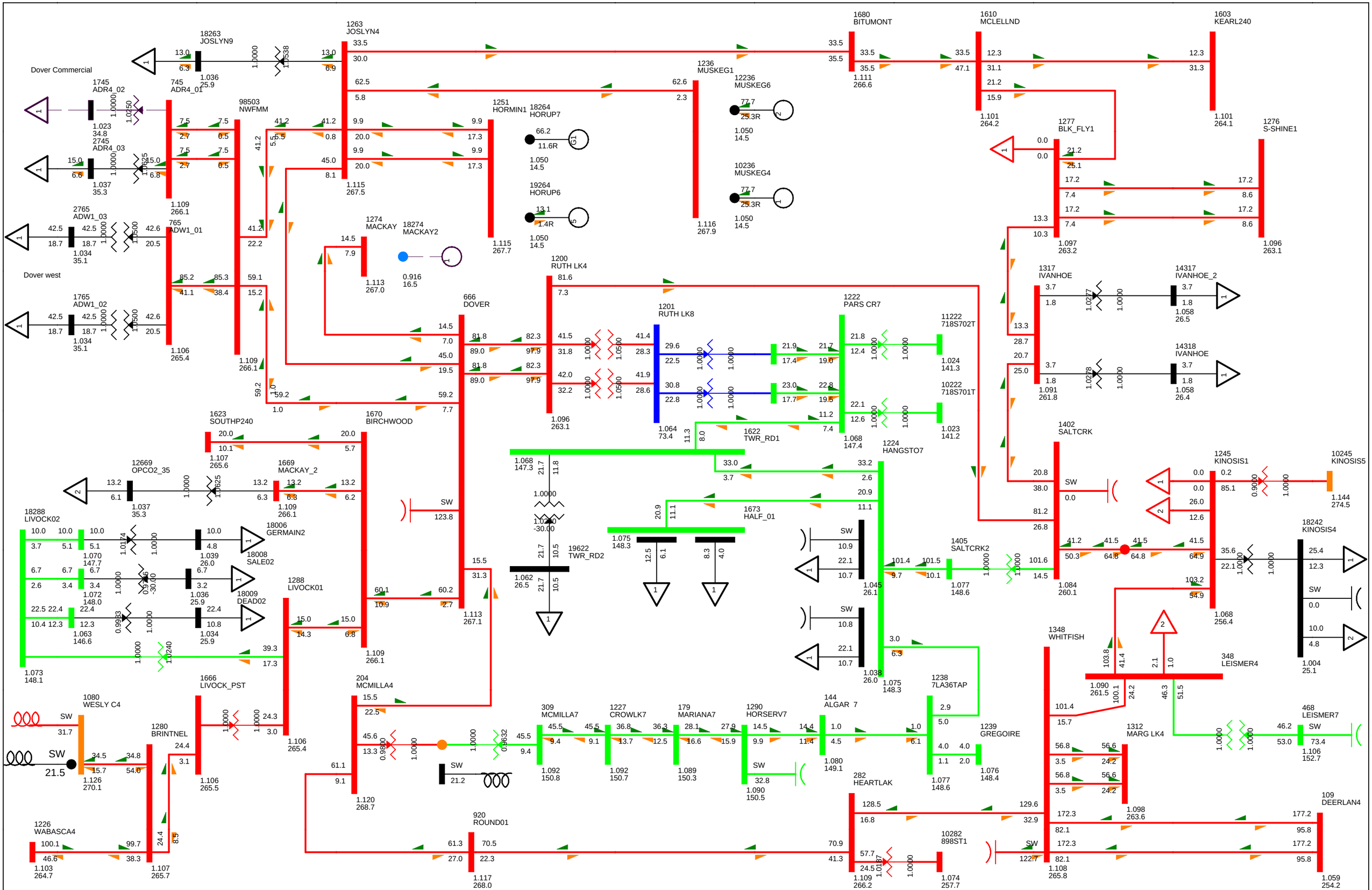

BC - Alberta (IMPORT)770.9 MW

2014WP BASE CASE
SWINGBUS 1520 FOR FC-2009-5:2016-04-30:19:24--1--1-0-0
WED, JUL 27 2011 8:57

NW FMM STUDY

Figure E-2014WP-1

Bus - VOLTAGE (kV/PU)
Branch - MW/Mvar
Equipment - MW/Mvar
100.0%RATEA
1.120OV 0.950UV
kV: <=34.500 <=69.000 <=138.000 <=240.000 <=500.000 >500.000

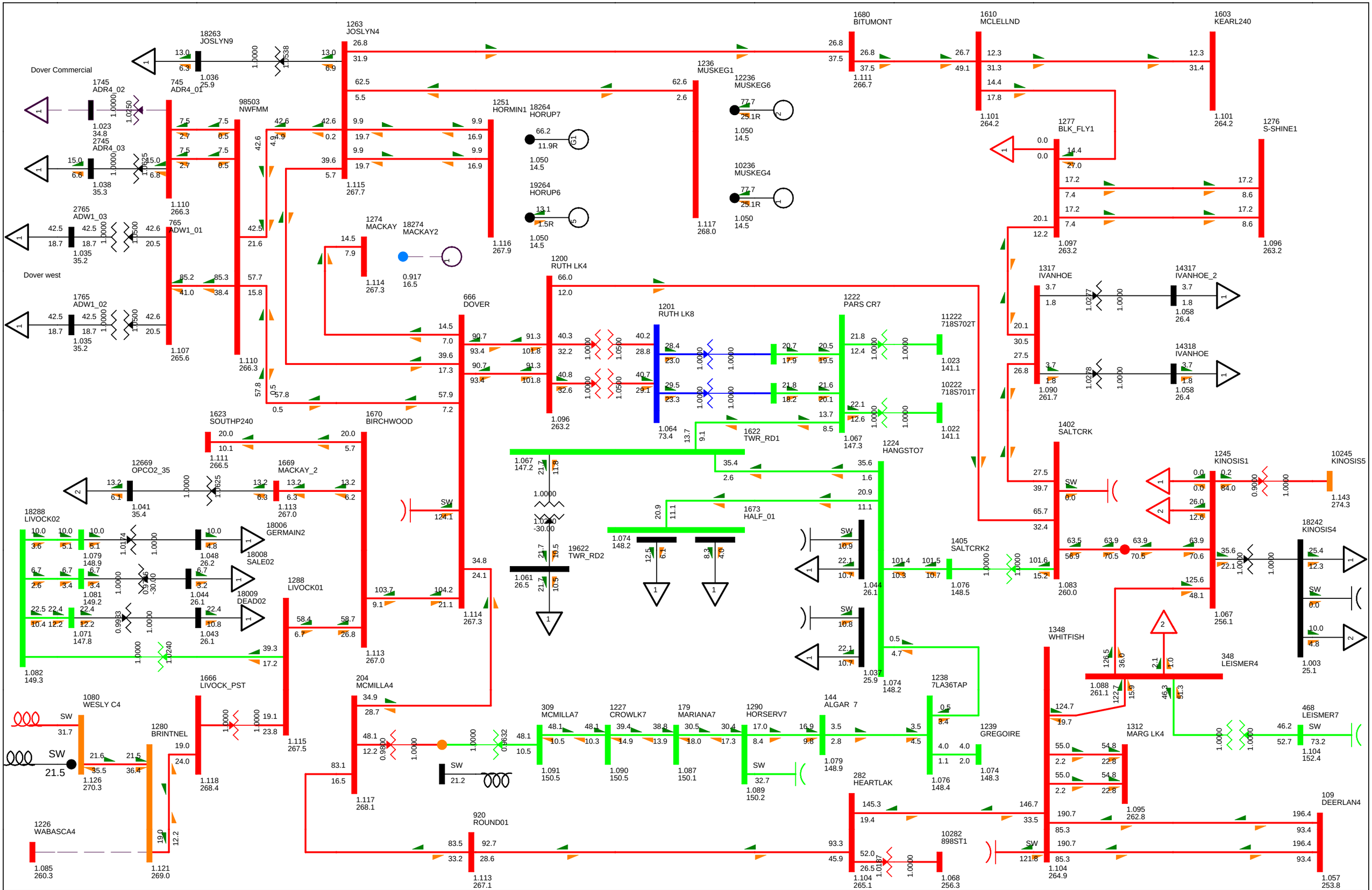

BC - Alberta (IMPORT)778.0 MW

2014WP BASE CASE
SWINGBUS 1520 FOR FC-2009-5:2016-04-30:19:24--1--1-0-0
WED, JUL 27 2011 8:57

NW FMM STUDY

Figure E-2014WP-2

Bus - VOLTAGE (kV/PU)
Branch - MW/Mvar
Equipment - MW/Mvar
100.0%RATEA
1.120OV 0.950UV
kV: <=34.500 <=69.000 <=138.000 <=240.000 <=500.000 >500.000

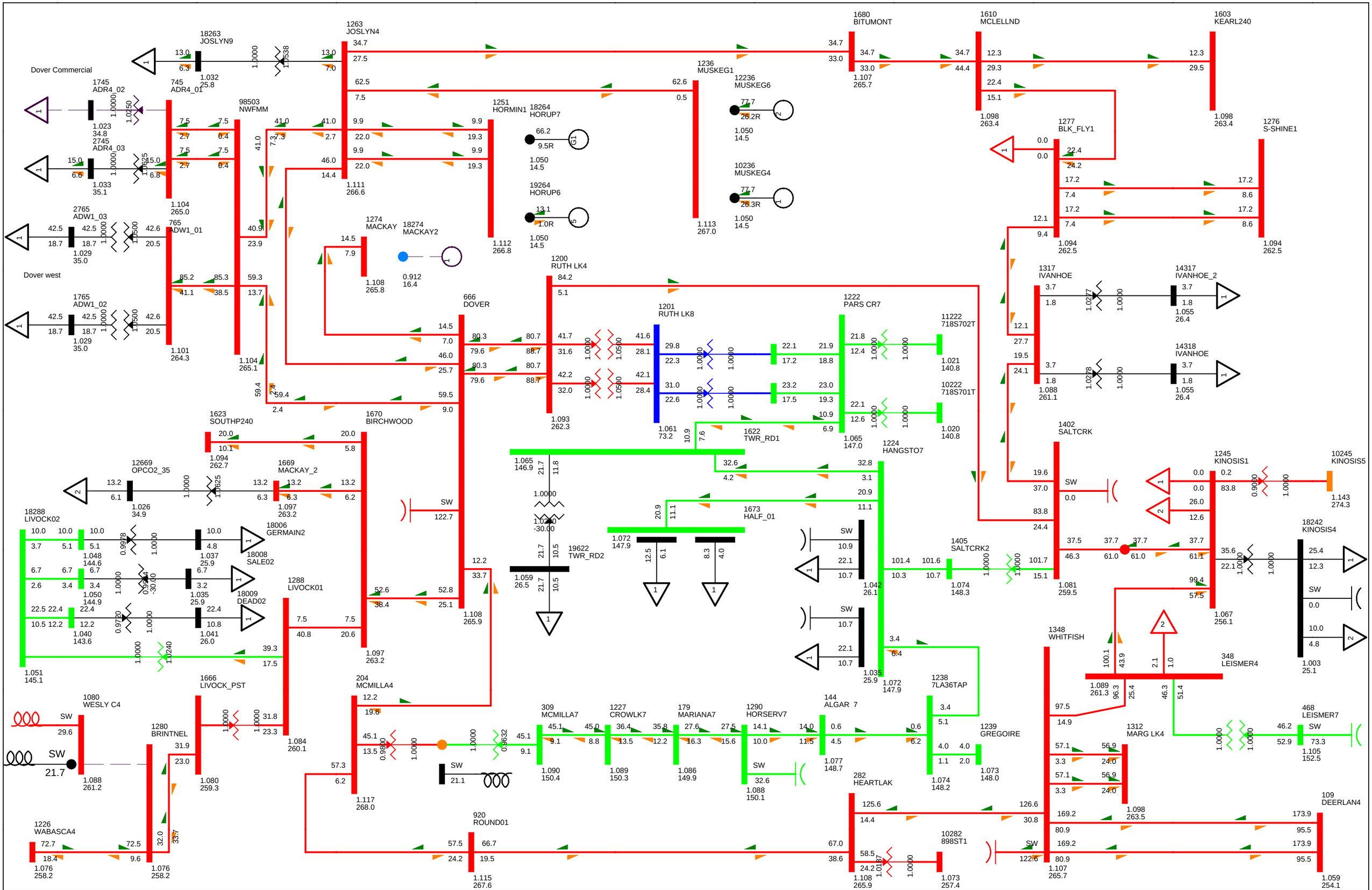

BC - Alberta (IMPORT)773.1 MW

2014WP BASE CASE
SWINGBUS 1520 FOR FC-2009-5:2016-04-30:19:24--1--1-0-0
WED, JUL 27 2011 8:57

NW FMM STUDY

Figure E-2014WP-3

Bus - VOLTAGE (kV/PU)
Branch - MW/Mvar
Equipment - MW/Mvar
100.0%RATEA
1.120OV 0.950UV
kV: <=34.500 <=69.000 <=138.000 <=240.000 <=500.000 >500.000

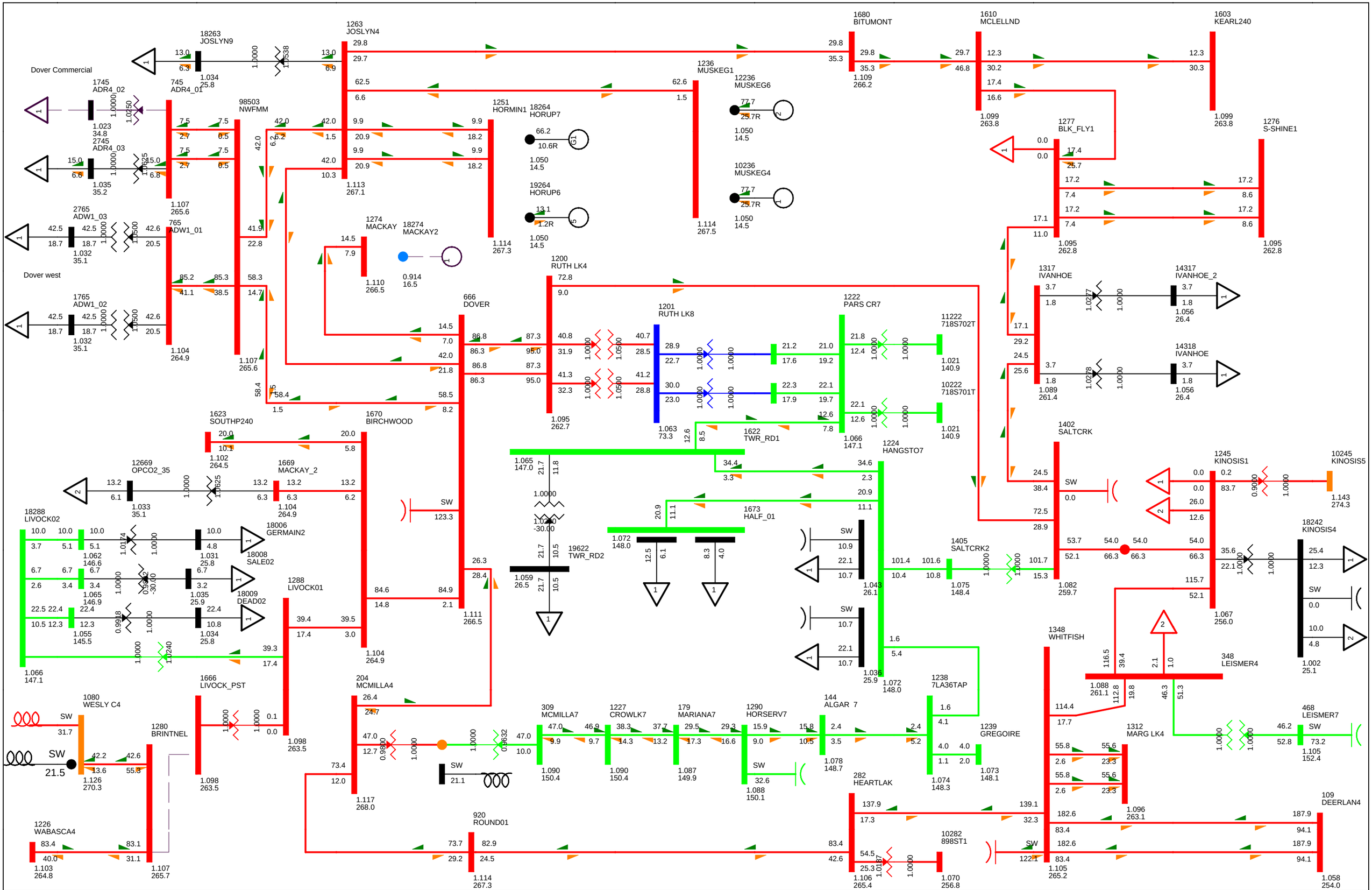

BC - Alberta (IMPORT)770.9 MW

2014WP BASE CASE
SWINGBUS 1520 FOR FC-2009-5:2016-04-30:19:24--1--1-0-0
WED, JUL 27 2011 8:57

NW FMM STUDY

Figure E-2014WP-4

Bus - VOLTAGE (kV/PU)
Branch - MW/Mvar
Equipment - MW/Mvar
100.0%RATEA
1.120OV 0.950UV
kV: <=34.500 <=69.000 <=138.000 <=240.000 <=500.000 >500.000

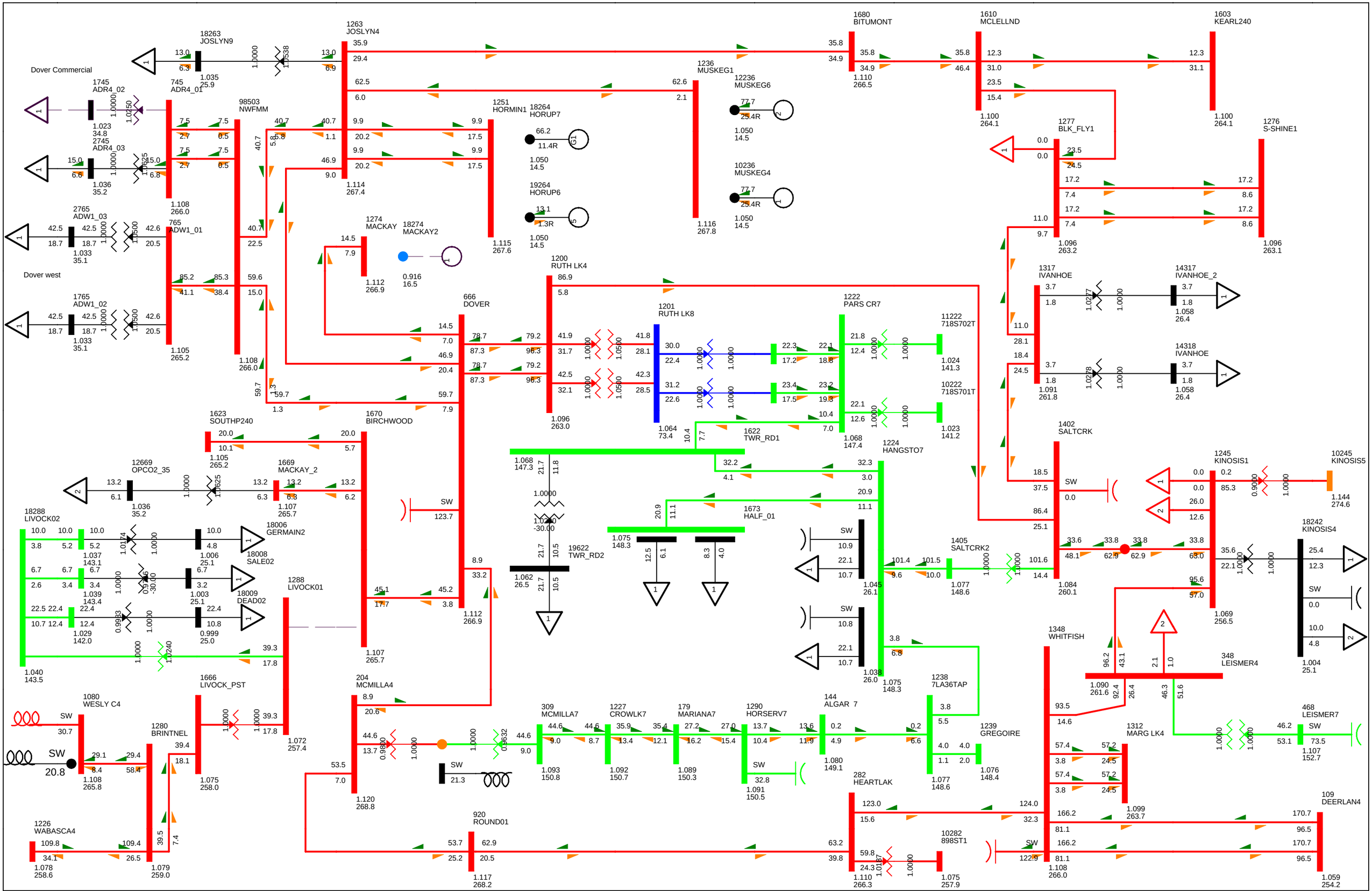

BC - Alberta (IMPORT)772.3 MW

2014WP BASE CASE
SWINGBUS 1520 FOR FC-2009-5:2016-04-30:19:24--1--1-0-0
WED, JUL 27 2011 8:57

NW FMM STUDY

Figure E-2014WP-5

Bus - VOLTAGE (kV/PU)
Branch - MW/Mvar
Equipment - MW/Mvar
100.0%RATEA
1.120OV 0.950UV
kV: <=34.500 <=69.000 <=138.000 <=240.000 <=500.000 >500.000

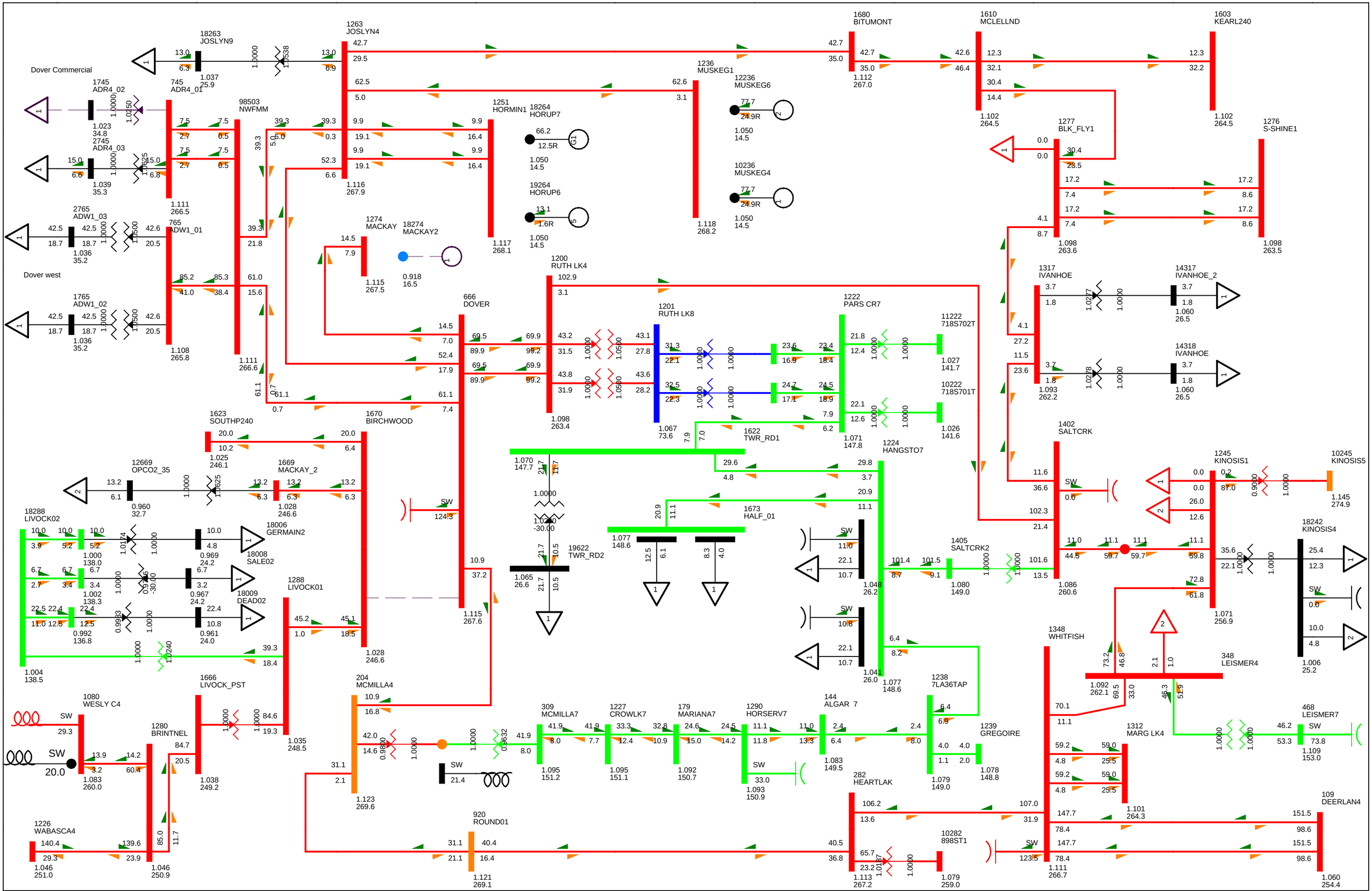

BC - Alberta (IMPORT)778.0 MW

2014WP BASE CASE
SWINGBUS 1520 FOR FC-2009-5:2016-04-30:19:24--1--1-0-0
WED, JUL 27 2011 8:57

NW FMM STUDY

Figure E-2014WP-6

Bus - VOLTAGE (kV/PU)
Branch - MW/Mvar
Equipment - MW/Mvar
100.0%RATEA
1.120OV 0.950UV
kV: <=34.500 <=69.000 <=138.000 <=240.000 <=500.000 >500.000

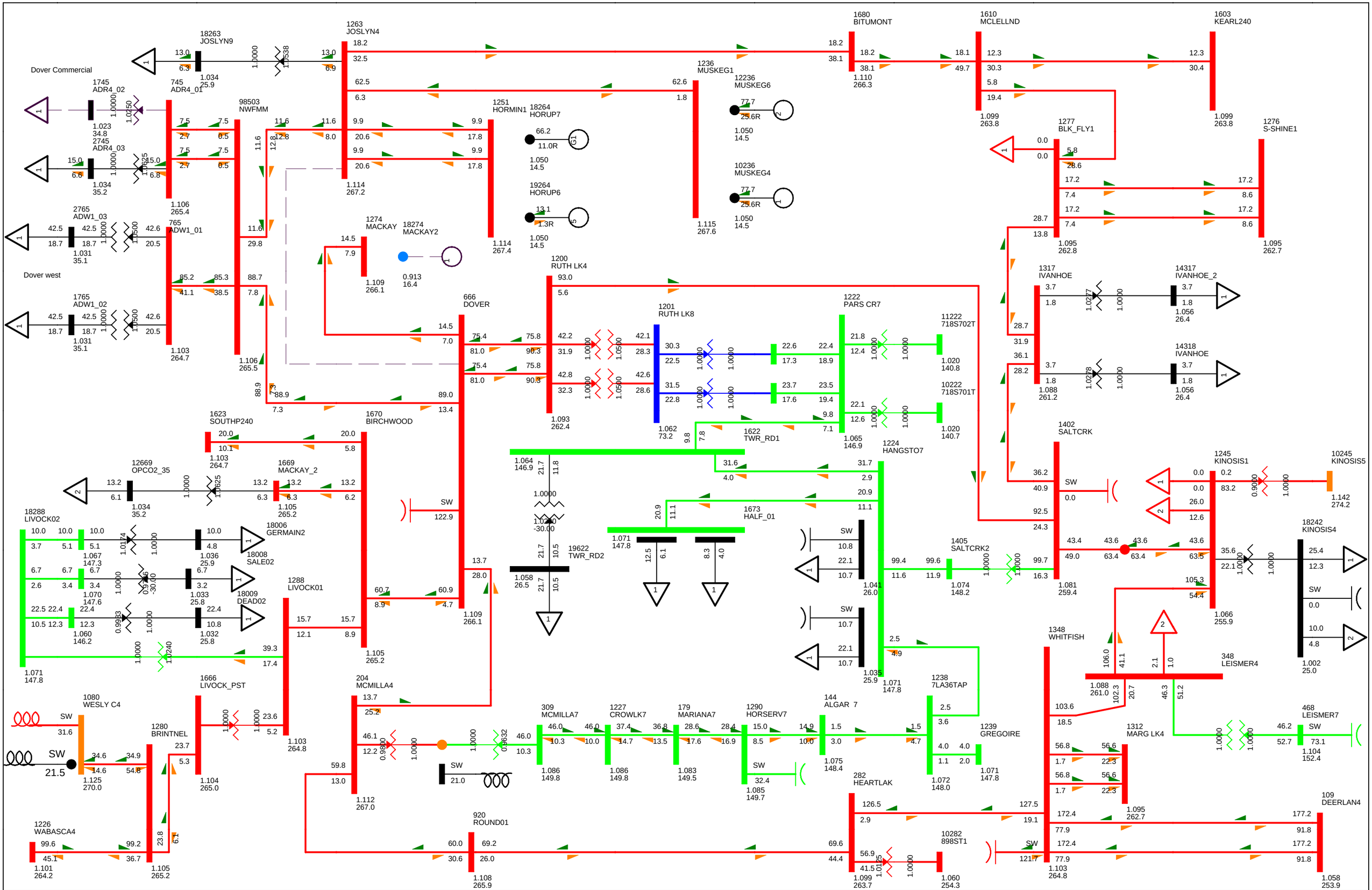

BC - Alberta (IMPORT)771.3 MW

2014WP BASE CASE
SWINGBUS 1520 FOR FC-2009-5:2016-04-30:19:24--1--1-0-0
WED, JUL 27 2011 8:57

NW FMM STUDY

Figure E-2014WP-7

Bus - VOLTAGE (kV/PU)
Branch - MW/Mvar
Equipment - MW/Mvar
100.0%RATEA
1.120OV 0.950UV
kV: <=34.500 <=69.000 <=138.000 <=240.000 <=500.000 >500.000

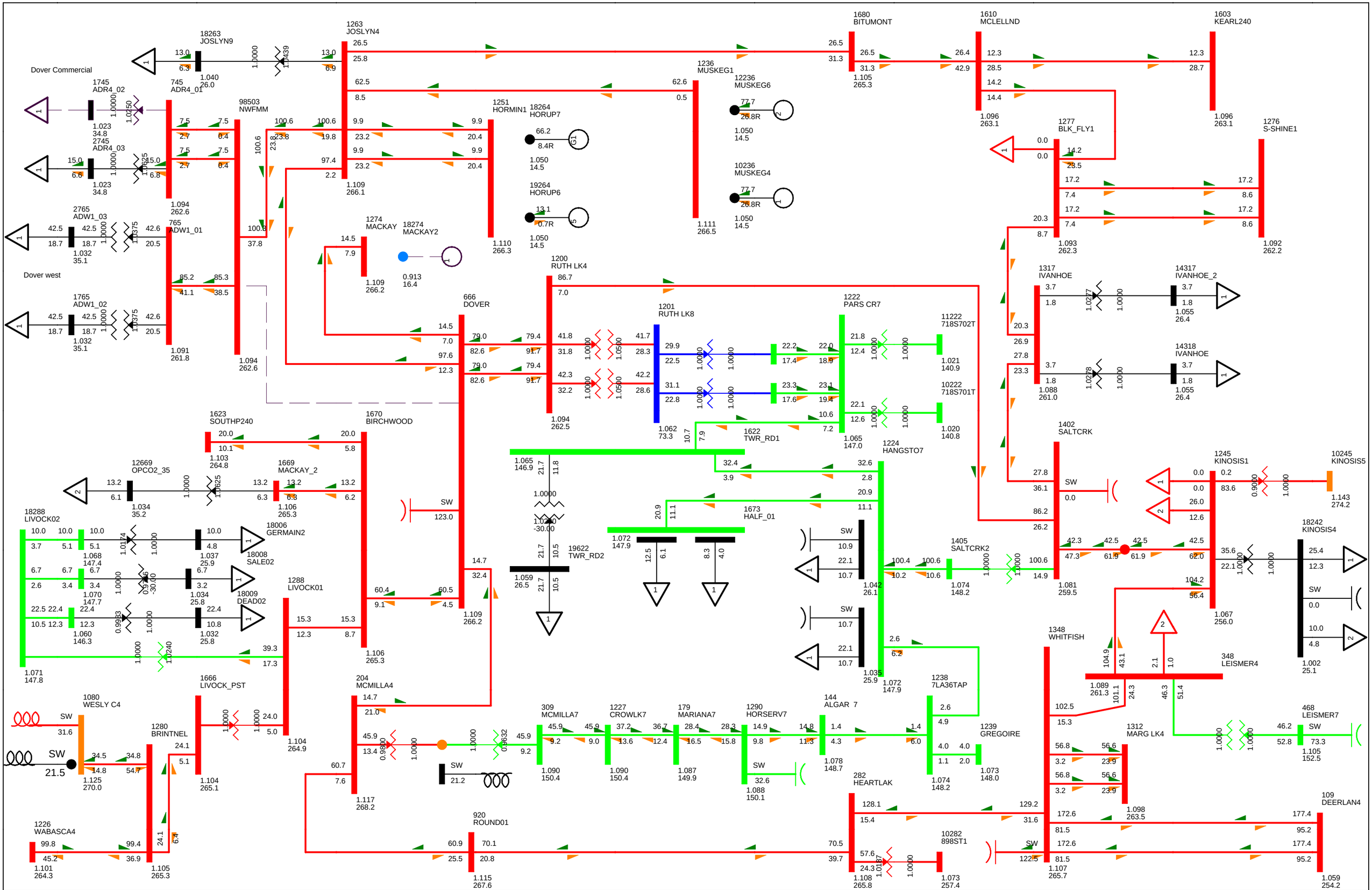

BC - Alberta (IMPORT)771.3 MW

2014WP BASE CASE
SWINGBUS 1520 FOR FC-2009-5:2016-04-30:19:24--1--1-0-0
WED, JUL 27 2011 8:58

NW FMM STUDY

Figure E-2014WP-8

Bus - VOLTAGE (kV/PU)
Branch - MW/Mvar
Equipment - MW/Mvar
100.0%RATEA
1.120OV 0.950UV
kV: <=34.500 <=69.000 <=138.000 <=240.000 <=500.000 >500.000

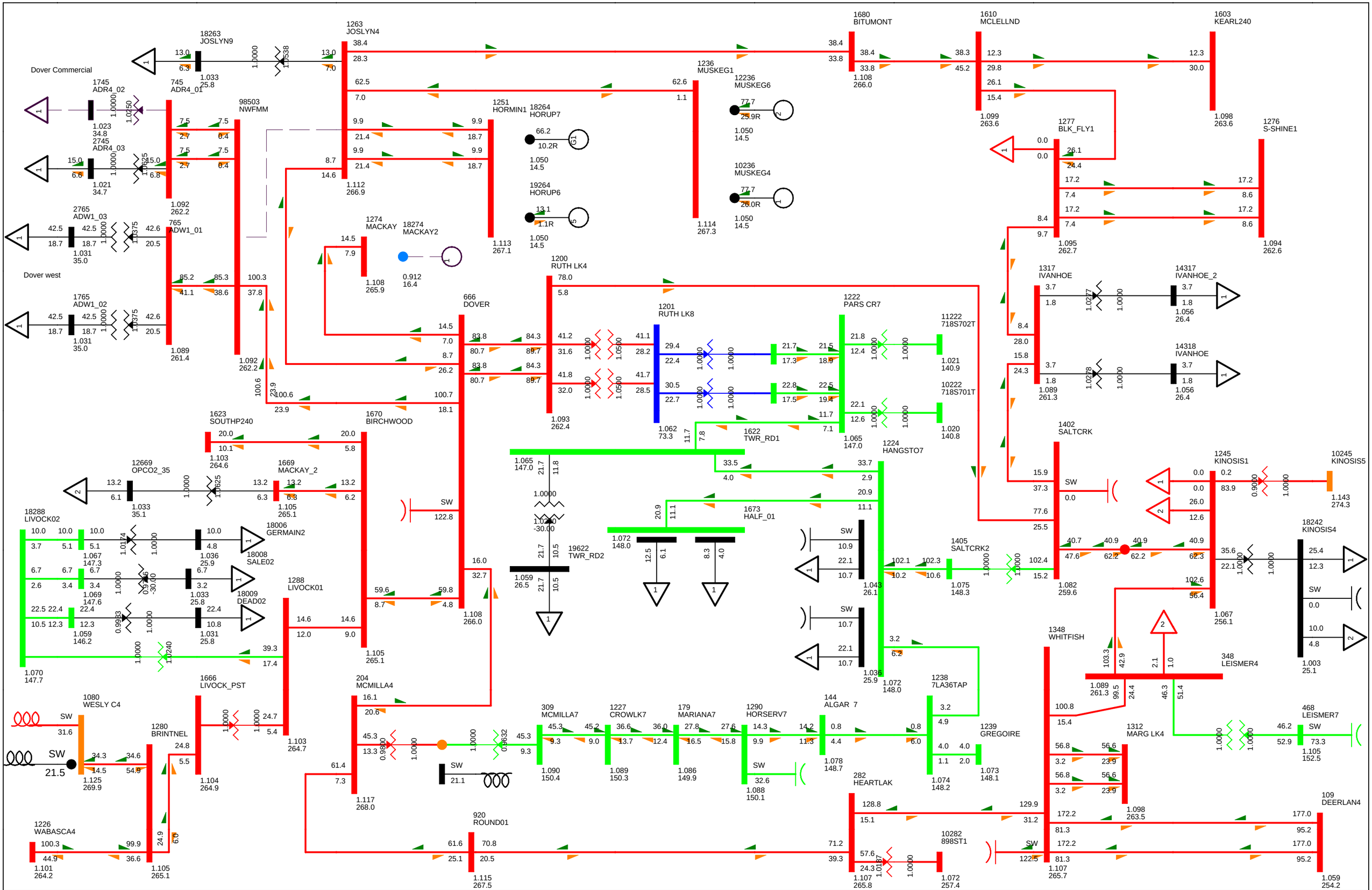

BC - Alberta (IMPORT)771.2 MW

2014WP BASE CASE
SWINGBUS 1520 FOR FC-2009-5:2016-04-30:19:24--1--1-0-0
WED, JUL 27 2011 8:58

NW FMM STUDY

Figure E-2014WP-9

Bus - VOLTAGE (kV/PU)
Branch - MW/Mvar
Equipment - MW/Mvar
100.0%RATEA
1.120OV 0.950UV
kV: <=34.500 <=69.000 <=138.000 <=240.000 <=500.000 >500.000

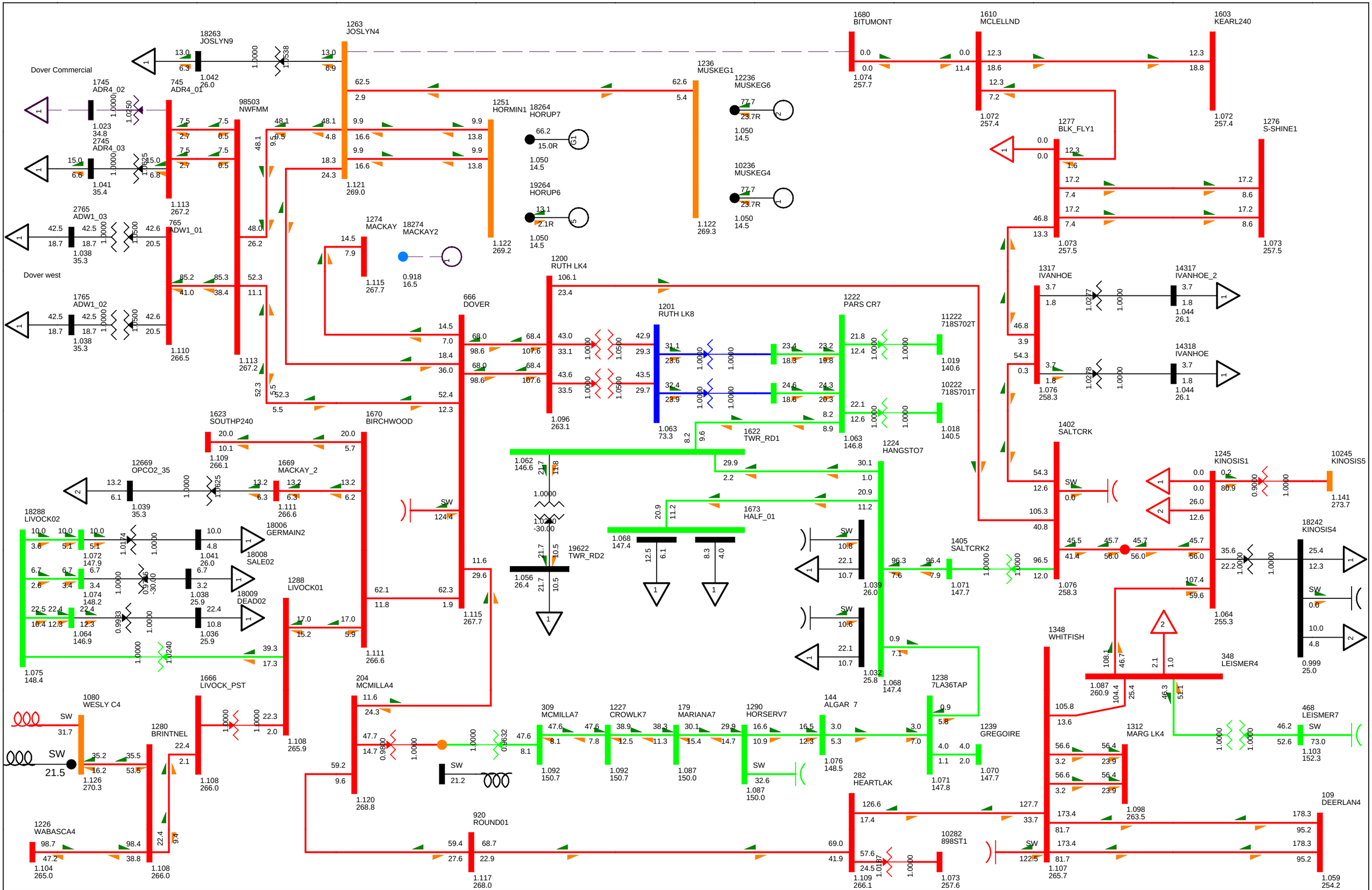

BC - Alberta (IMPORT)771.3 MW

2014WP BASE CASE
SWINGBUS 1520 FOR FC-2009-5:2016-04-30:19:24--1--1-0-0
WED, JUL 27 2011 8:58

NW FMM STUDY

Figure E-2014WP-10

Bus - VOLTAGE (kV/PU)
Branch - MW/Mvar
Equipment - MW/Mvar
100.0%RATEA
1.120OV 0.950UV
kV: <=34.500 <=69.000 <=138.000 <=240.000 <=500.000 >500.000

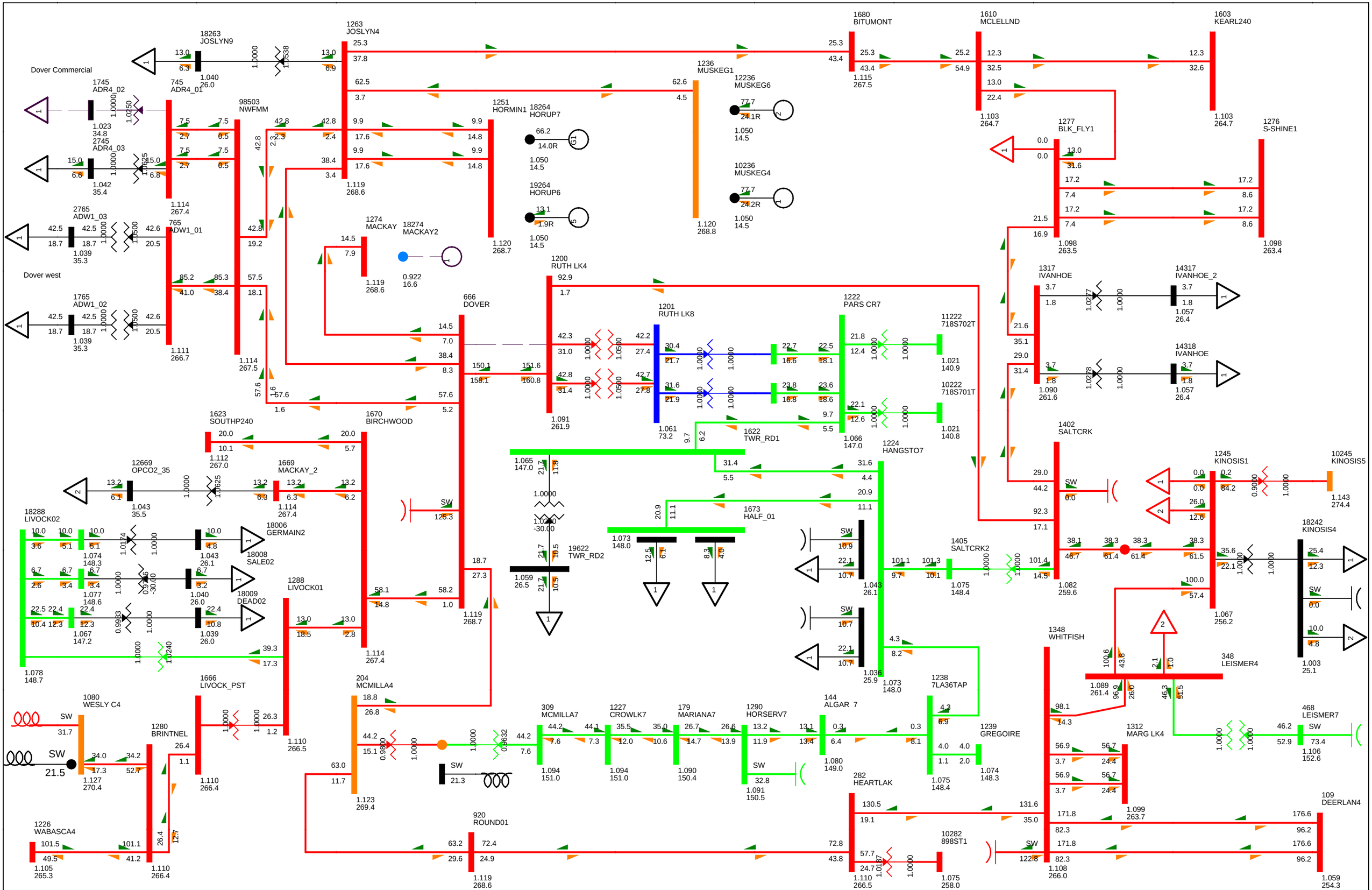

BC - Alberta (IMPORT)771.8 MW

2014WP BASE CASE
SWINGBUS 1520 FOR FC-2009-5:2016-04-30:19:24--1--1-0-0
WED, JUL 27 2011 8:58

NW FMM STUDY

Figure E-2014WP-11

Bus - VOLTAGE (kV/PU)
Branch - MW/Mvar
Equipment - MW/Mvar
100.0%RATEA
1.120OV 0.950UV
kV: <=34.500 <=69.000 <=138.000 <=240.000 <=500.000 >500.000

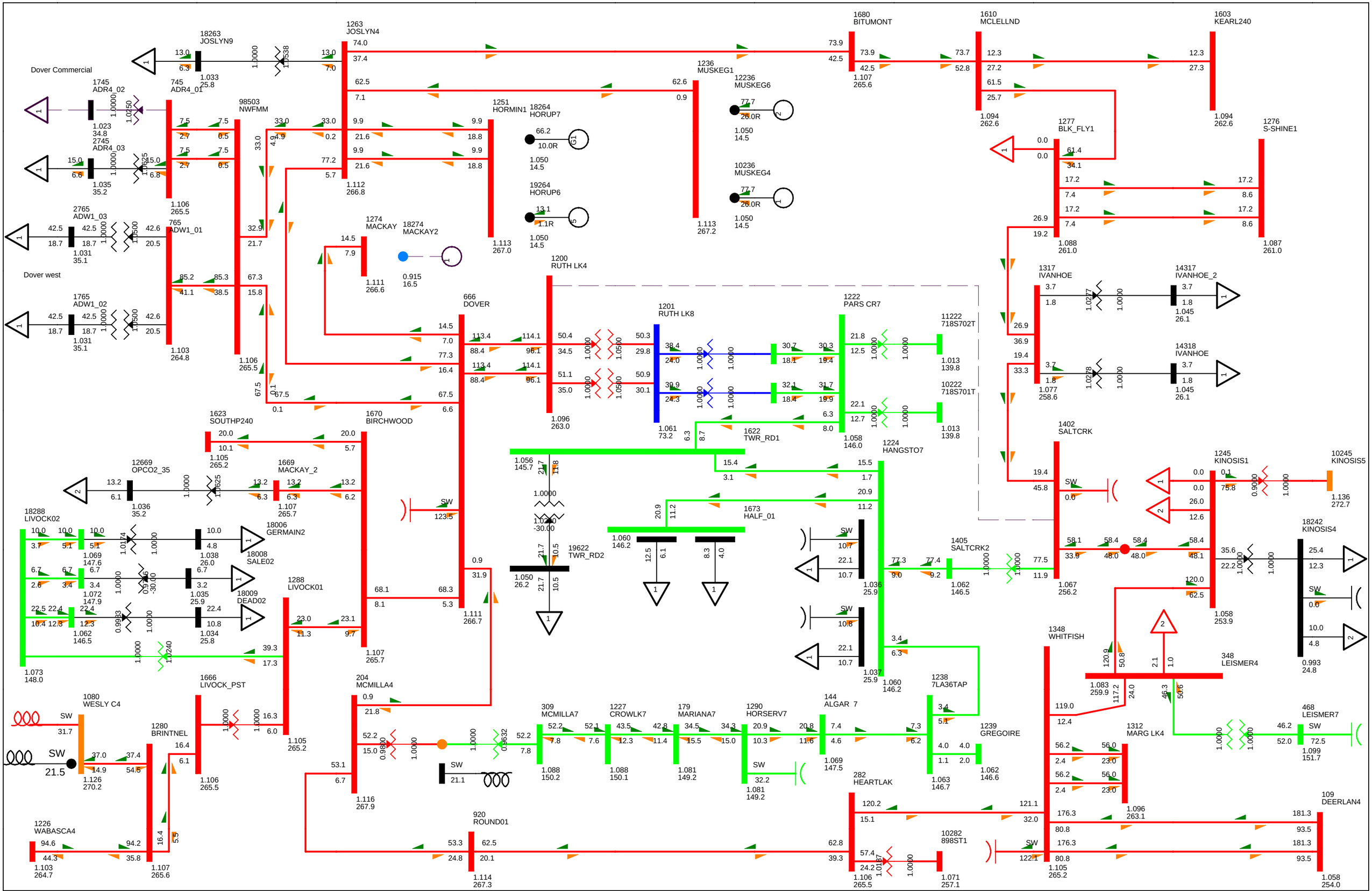

BC - Alberta (IMPORT)771.8 MW

2014WP BASE CASE
SWINGBUS 1520 FOR FC-2009-5:2016-04-30:19:24--1--1-0-0
WED, JUL 27 2011 8:58

NW FMM STUDY

Figure E-2014WP-12

Bus - VOLTAGE (kV/PU)
Branch - MW/Mvar
Equipment - MW/Mvar
100.0%RATEA
1.120OV 0.950UV
kV: <=34.500 <=69.000 <=138.000 <=240.000 <=500.000 >500.000

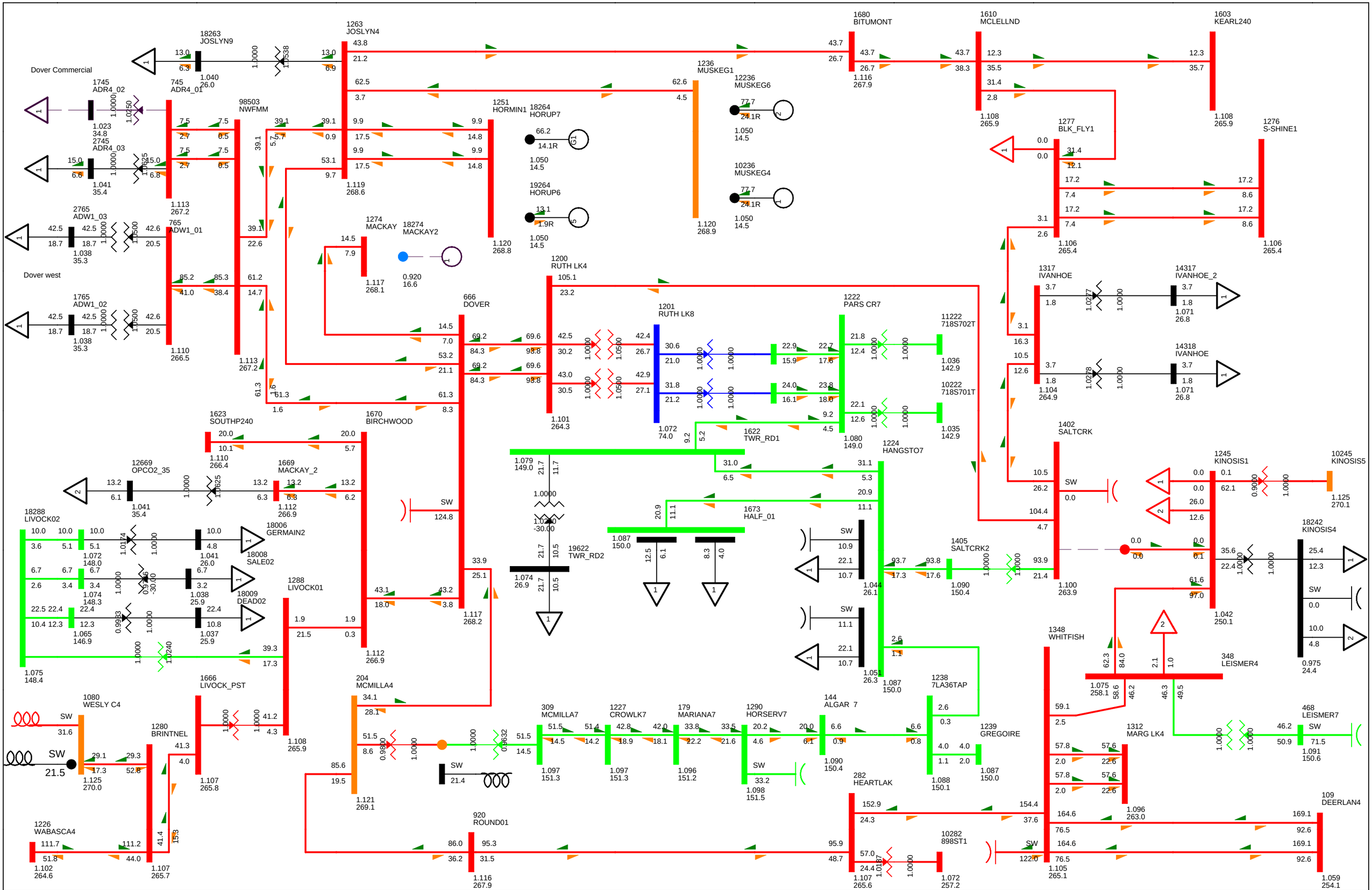

BC - Alberta (IMPORT)772.6 MW

2014WP BASE CASE
SWINGBUS 1520 FOR FC-2009-5:2016-04-30:19:24--1--1-0-0
WED, JUL 27 2011 8:58

NW FMM STUDY

Figure E-2014WP-13

Bus - VOLTAGE (kV/PU)
Branch - MW/Mvar
Equipment - MW/Mvar
100.0%RATEA
1.120OV 0.950UV
kV: <=34.500 <=69.000 <=138.000 <=240.000 <=500.000 >500.000

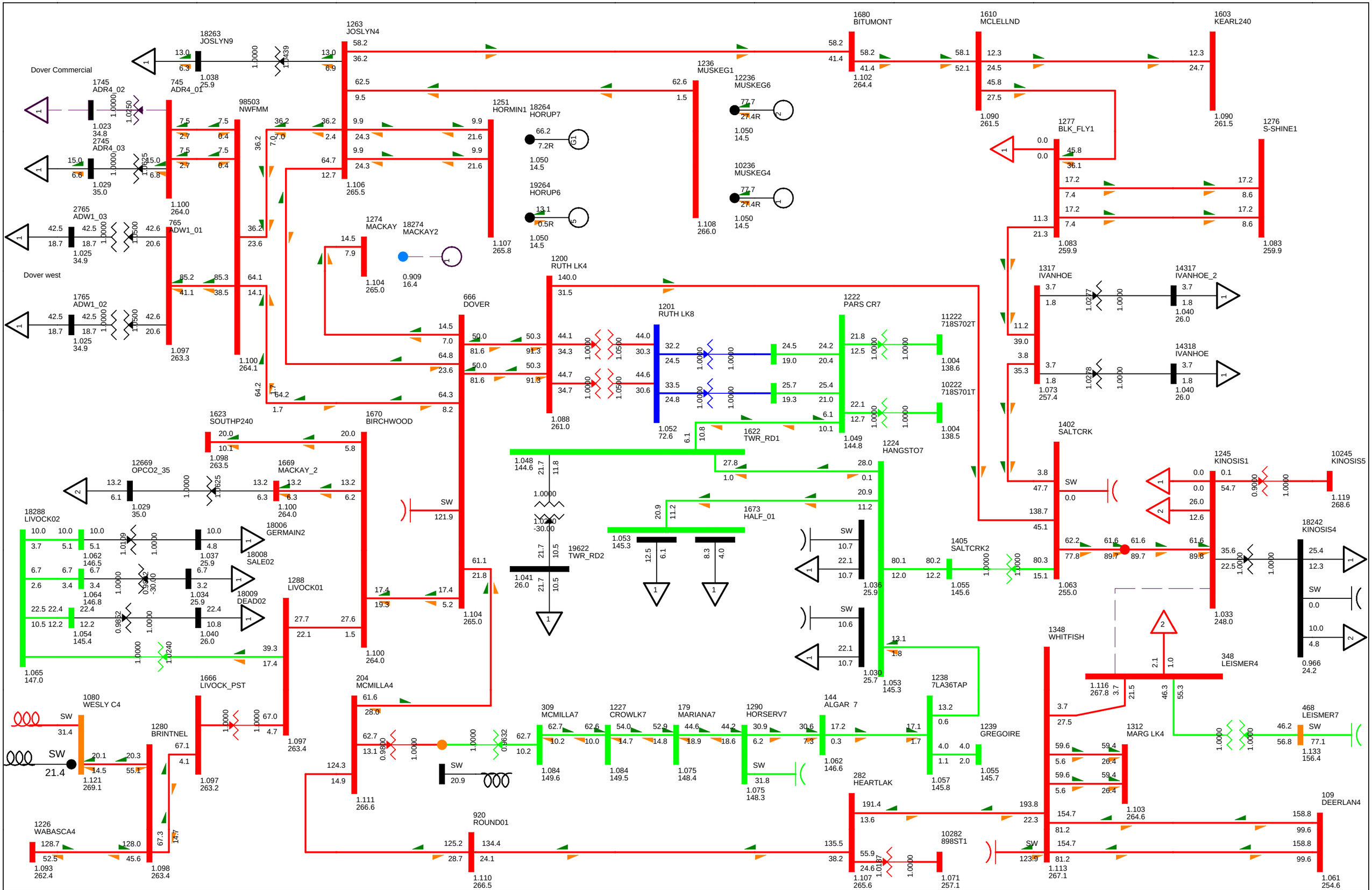

BC - Alberta (IMPORT)779.7 MW

2014WP BASE CASE
SWINGBUS 1520 FOR FC-2009-5:2016-04-30:19:24--1--1-0-0
WED, JUL 27 2011 8:58

NW FMM STUDY

Figure E-2014WP-14

Bus - VOLTAGE (kV/PU)
Branch - MW/Mvar
Equipment - MW/Mvar
100.0%RATEA
1.120OV 0.950UV
kV: <=34.500 <=69.000 <=138.000 <=240.000 <=500.000 >500.000

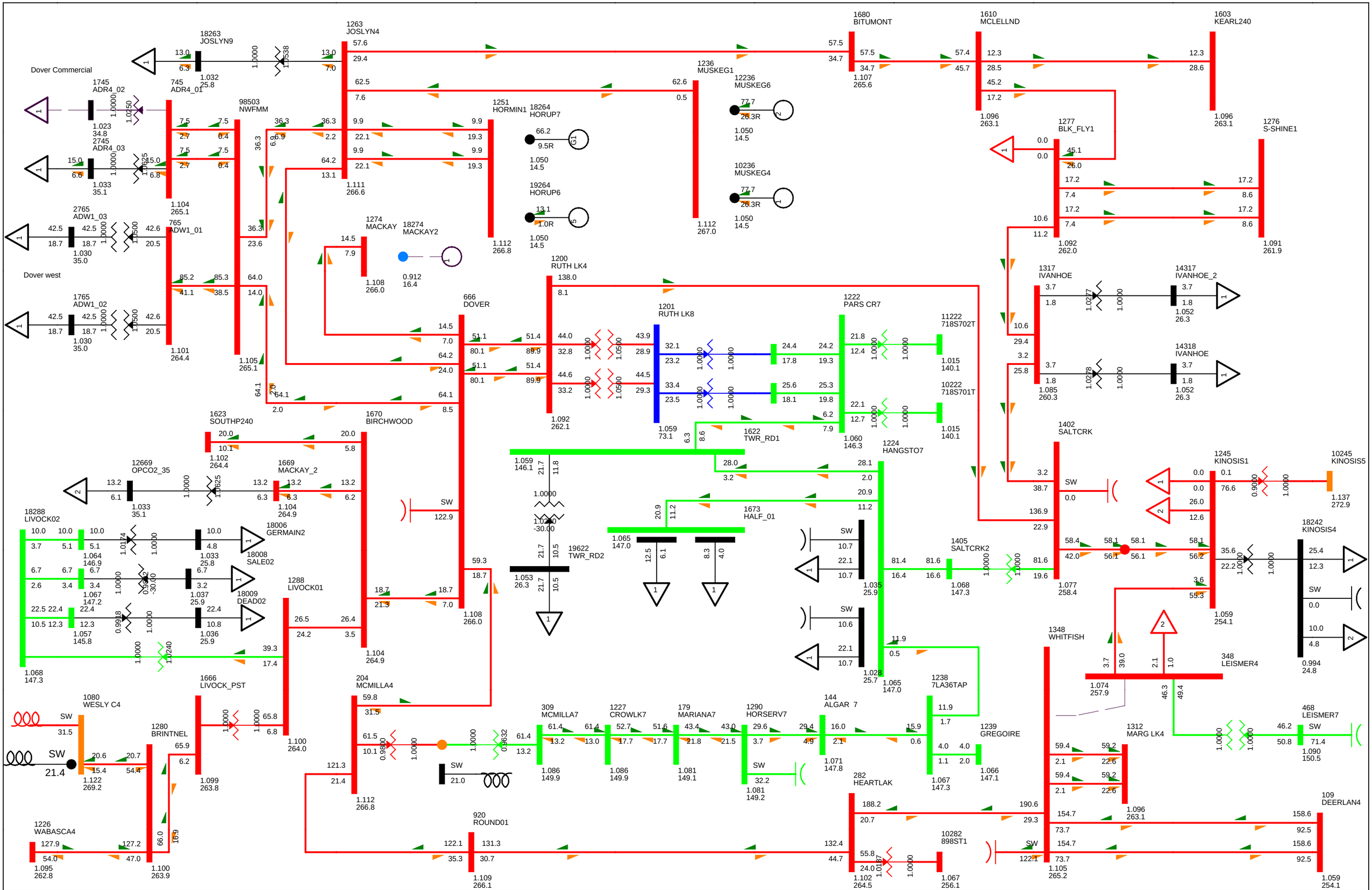

BC - Alberta (IMPORT)778.6 MW

2014WP BASE CASE
SWINGBUS 1520 FOR FC-2009-5:2016-04-30:19:24--1--1-0-0
WED, JUL 27 2011 8:58

NW FMM STUDY

Figure E-2014WP-15

Bus - VOLTAGE (kV/PU)
Branch - MW/Mvar
Equipment - MW/Mvar
100.0%RATEA
1.120OV 0.950UV
kV: <=34.500 <=69.000 <=138.000 <=240.000 <=500.000 >500.000

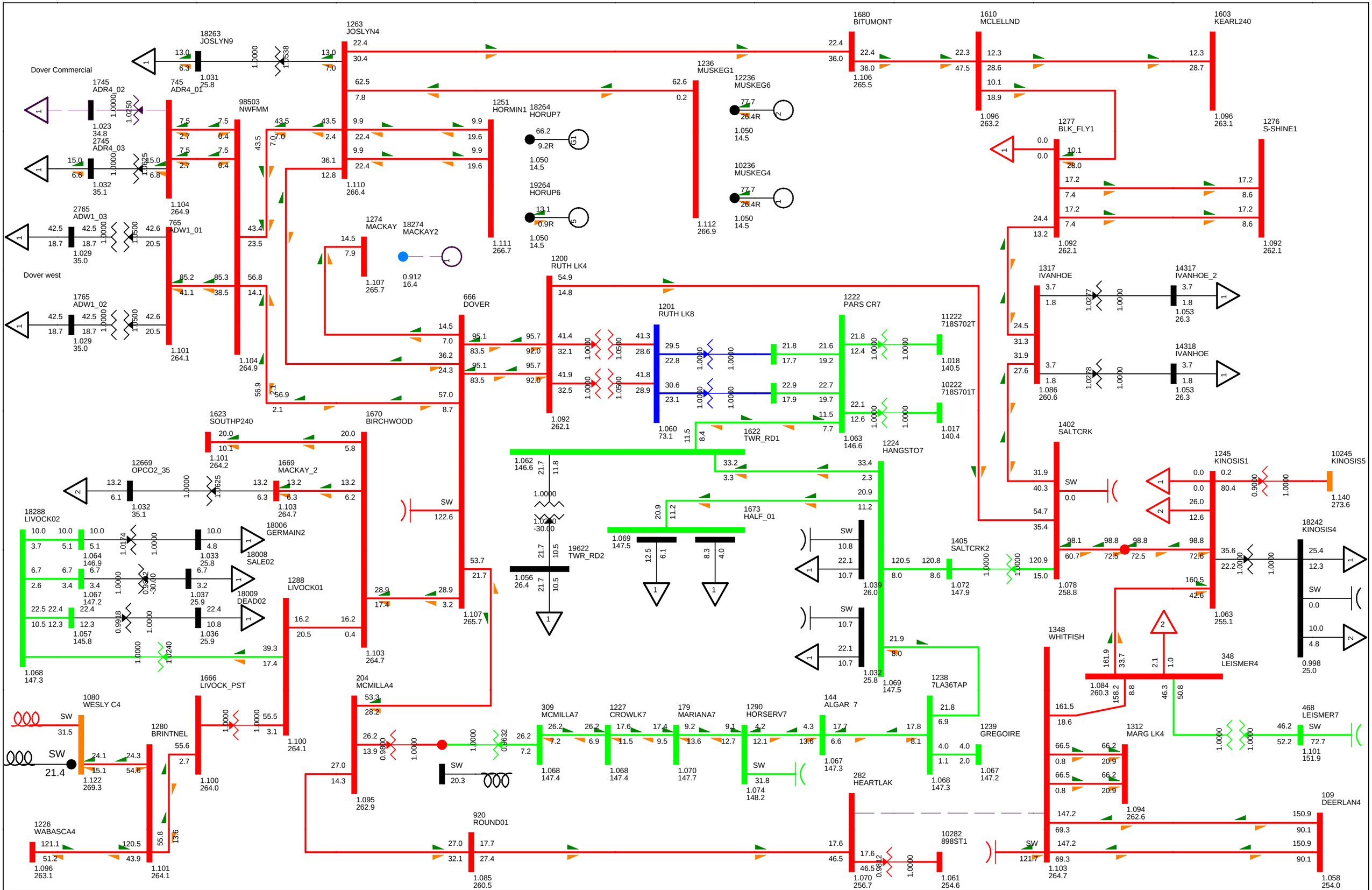

BC - Alberta (IMPORT)784.0 MW

2014WP BASE CASE
SWINGBUS 1520 FOR FC-2009-5:2016-04-30:19:24--1--1-0-0
WED, JUL 27 2011 8:59

NW FMM STUDY

Figure E-2014WP-16

Bus - VOLTAGE (kV/PU)
Branch - MW/Mvar
Equipment - MW/Mvar
100.0%RATEA
1.120OV 0.950UV
kV: <=34.500 <=69.000 <=138.000 <=240.000 <=500.000 >500.000

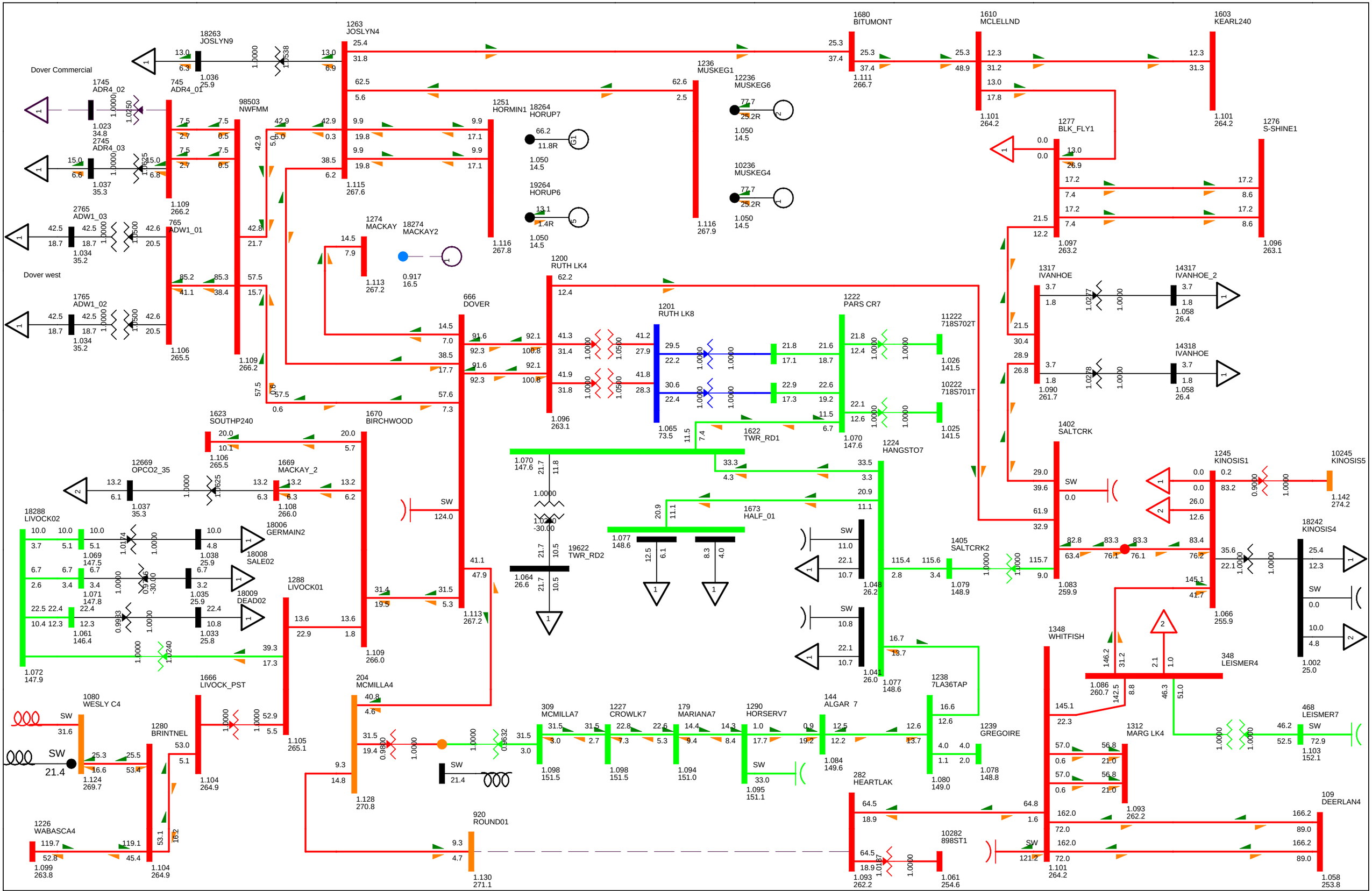

BC - Alberta (IMPORT)773.9 MW

2014WP BASE CASE
SWINGBUS 1520 FOR FC-2009-5:2016-04-30:19:24--1--1-0-0
WED, JUL 27 2011 8:59

NW FMM STUDY

Figure E-2014WP-17

Bus - VOLTAGE (kV/PU)
Branch - MW/Mvar
Equipment - MW/Mvar
100.0%RATEA
1.120OV 0.950UV
kV: <=34.500 <=69.000 <=138.000 <=240.000 <=500.000 >500.000

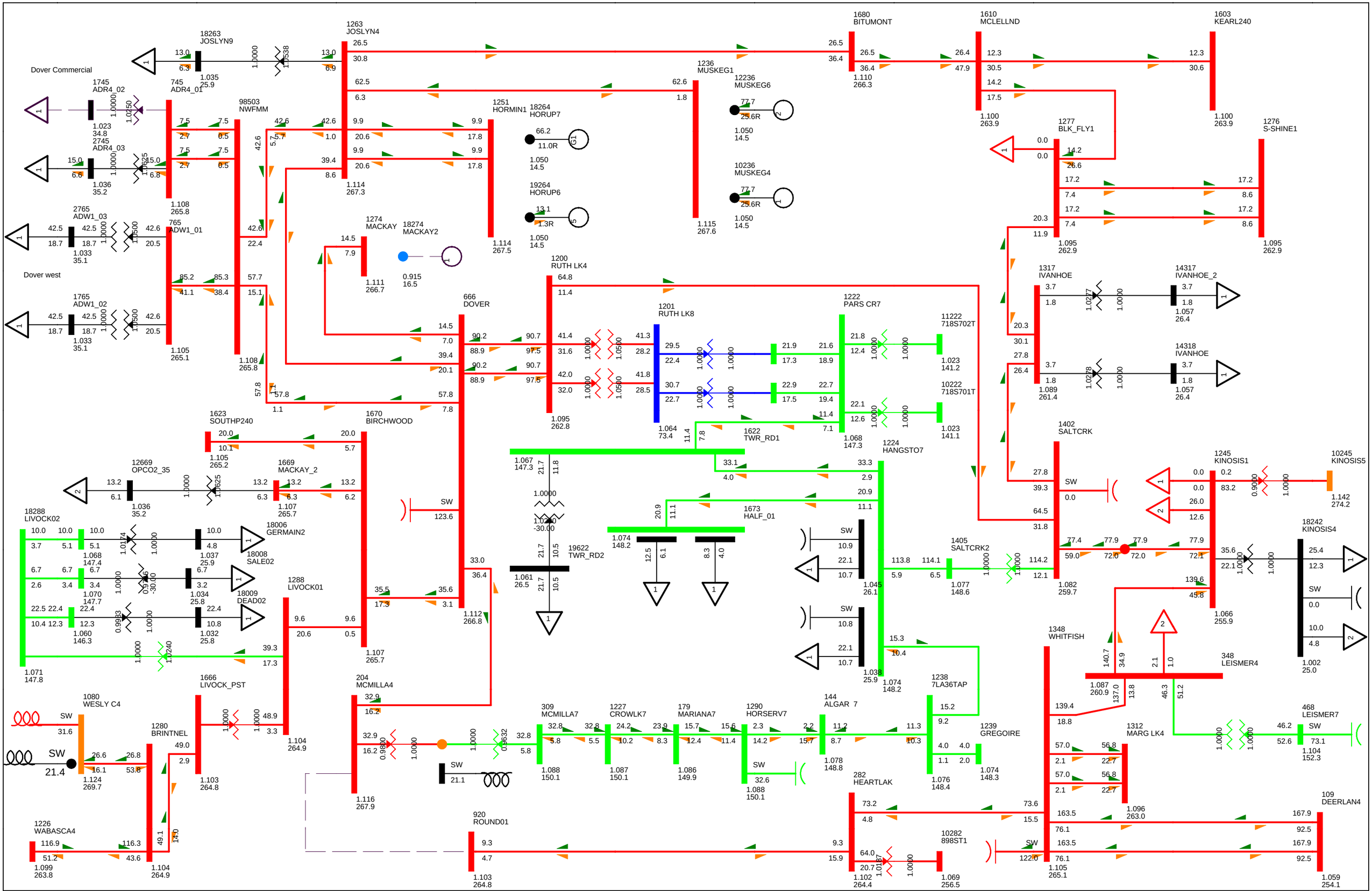
Dover Commercial
Dover west
18263 JOSLYN9
1263 JOSLYN4
1680 BITUMONT
1610 MCLELLND
1603 KEARL240
1745 ADR4_02
745 ADR4_01
2745 ADR4_03
98503 NWFMM
1236 MUSKEG1
12236 MUSKEG6
10236 MUSKEG4
1251 HORMIN1
18264 HORUP7
19264 HORUP6
1277 BLK_FLY1
1276 S-SHINE1
2765 ADW1_03
765 ADW1_01
1765 ADW1_02
1274 MACKAY
18274 MACKAY2
1200 RUTH LK4
1201 RUTH LK8
666 DOVER
1222 PARS CR7
11222 718S702T
10222 718S701T
1317 IVANHOE
14317 IVANHOE_2
14318 IVANHOE
1623 SOUTHP240
1670 BIRCHWOOD
12669 OPCO2_35
1669 MACKAY_2
1622 TWR_RD1
1224 HANGSTO7
1402 SALTCRK
1245 KINOSIS1
10245 KINOSIS5
18288 LIVOCK02
18006 GERMAIN2
18008 SALE02
18009 DEAD02
1288 LIVOCK01
1673 HALF_01
19622 TWR_RD2
1405 SALTCRK2
18242 KINOSIS4
1348 WHITFISH
348 LEISMER4
1080 WESLY C4
1666 LIVOCK_PST
204 MCMILLA4
309 MCMILLA7
1227 CROWLK7
179 MARIANA7
1290 HORSERV7
144 ALGAR 7
1238 7LA36TAP
1239 GREGOIRE
1312 MARG LK4
468 LEISMER7
1280 BRINTNEL
282 HEARTLAK
1226 WABASCA4
920 ROUND01
10282 898ST1
109 DEERLAN4
SW
BC - Alberta (IMPORT)773.0 MW
2014WP BASE CASE
SWINGBUS 1520 FOR FC-2009-5:2016-04-30:19:24--1--1-0-0
WED, JUL 27 2011 8:59
NW FMM STUDY
Figure E-2014WP-18
Bus - VOLTAGE (kV/PU)
Branch - MW/Mvar
Equipment - MW/Mvar
100.0%RATEA
1.120OV 0.950UV
kV: <=34.500 <=69.000 <=138.000 <=240.000 <=500.000 >500.000

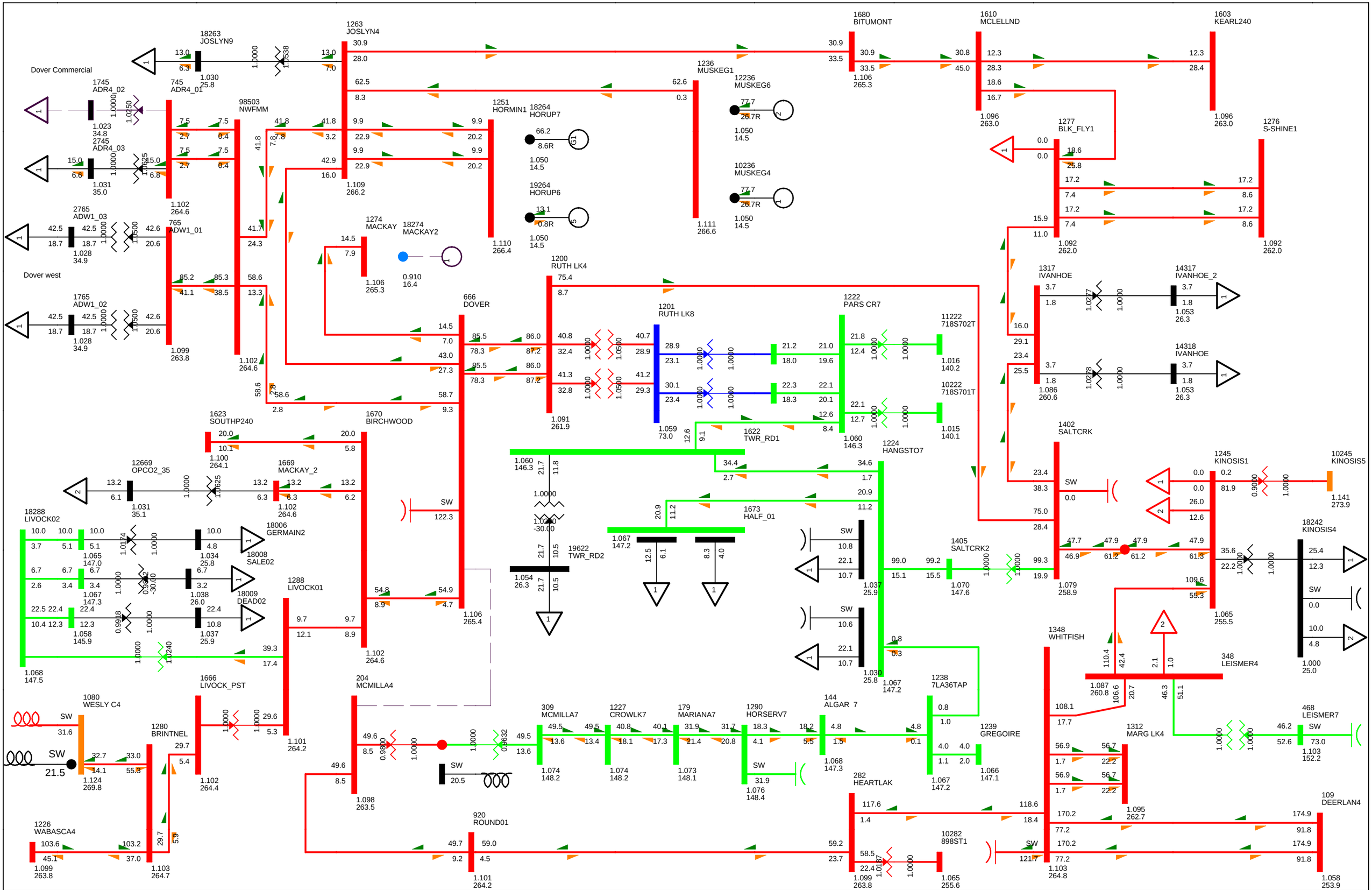

BC - Alberta (IMPORT)771.4 MW

2014WP BASE CASE
SWINGBUS 1520 FOR FC-2009-5:2016-04-30:19:24--1--1-0-0
WED, JUL 27 2011 8:59

NW FMM STUDY

Figure E-2014WP-19

Bus - VOLTAGE (kV/PU)
Branch - MW/Mvar
Equipment - MW/Mvar
100.0%RATEA
1.120OV 0.950UV
kV: <=34.500 <=69.000 <=138.000 <=240.000 <=500.000 >500.000

Table E-5 Power Flow Analysis Summary- 2015 Summer Peak with NW FMM

Figure Number	Contingency	Thermal Violation	Voltage Violation
Figure E-2015SP_EX-1	Base Case (N - 0)	None	None
Figure E-2015SP_EX-2	Open 9L56 240kV line (WABASCA 720S to Brintnell 876S)	None	None
Figure E-2015SP_EX-3	Open 9L15 240kV line (Wesley Creek 834S to Livock 939S)	None	None
Figure E-2015SP_EX-4	Open 9L10 240kV line (Brintnell 876S to Livock 939S)	None	None
Figure E-2015SP_EX-5	Open 9L57 240kV line (Livock 939S to Birchwood Creek 960S)	None	None
Figure E-2015SP_EX-6	Open 9L74 240kV line (Birchwood Creek 960S to Dover 888S)	None	None
Figure E-2015SP_EX-7	Open 9L09 240kV line (Dover 888S to Joslyn Creek 849S)	None	None
Figure E-2015SP_EX-8	Open 9L08 240kV line (Ells River to to Dover 888S)	None	None
Figure E-2015SP_EX-9	Open 9L76 240kV line (Ells River to Joslyn Creek 849S)	None	None
Figure E-2015SP_EX-10	Open 9L32 240kV line (Joslyn Creek 849S to Bitumont 941S)	None	None
Figure E-2015SP_EX-11	Open 9L01 240kV line (Dover 888S to Ruth Lake 848S)	None	None
Figure E-2015SP_EX-12	Open 9L23 240kV line (Ruth Lake 848S to Salt Creek 977S)	None	None
Figure E-2015SP_EX-13	Open 9L990 240kV line (Salt Creek 977S to Kinosis 856S)	None	None
Figure E-2015SP_EX-14	Open 9L990 240kV line (Kinosis 856S to Leismer 72S)	None	None
Figure E-2015SP_EX-15	Open 9L930 240kV line (Leismer 72S to Whitefish Lake 825S)	None	None
Figure E-2015SP_EX-16	Open 9L22 240kV line (Whitefish Lake 825S to Heart Lake 898S)	None	None
Figure E-2015SP_EX-17	Open 9L47 240kV line (Heart Lake 898S to RoundHill POD)	None	None
Figure E-2015SP_EX-18	Open 9L55 240kV line (RoundHill POD to McMillan 885S)	None	None
Figure E-2015SP_EX-19	Open 9L07 240kV line (McMillan 885S TO Dover 888S)	None	None

Figure E-2015SP_EX-20	Open 9L58 240kV line (Ruth Lake 848S to Thickwood 951S)	None	None
Figure E-2015SP_EX-21	Open 9L68 240kV line (Thickwood 951S TO Dover 888S)	None	None
Figure E-2015SP_EX-22	Open 9L30 240kV line (McMillan 885S TO Dover 888S)	None	None
Figure E-2015SP_EX-23	Open 9L95 240kV line (Ells River 2079S TO Birchwood 960S)	None	None

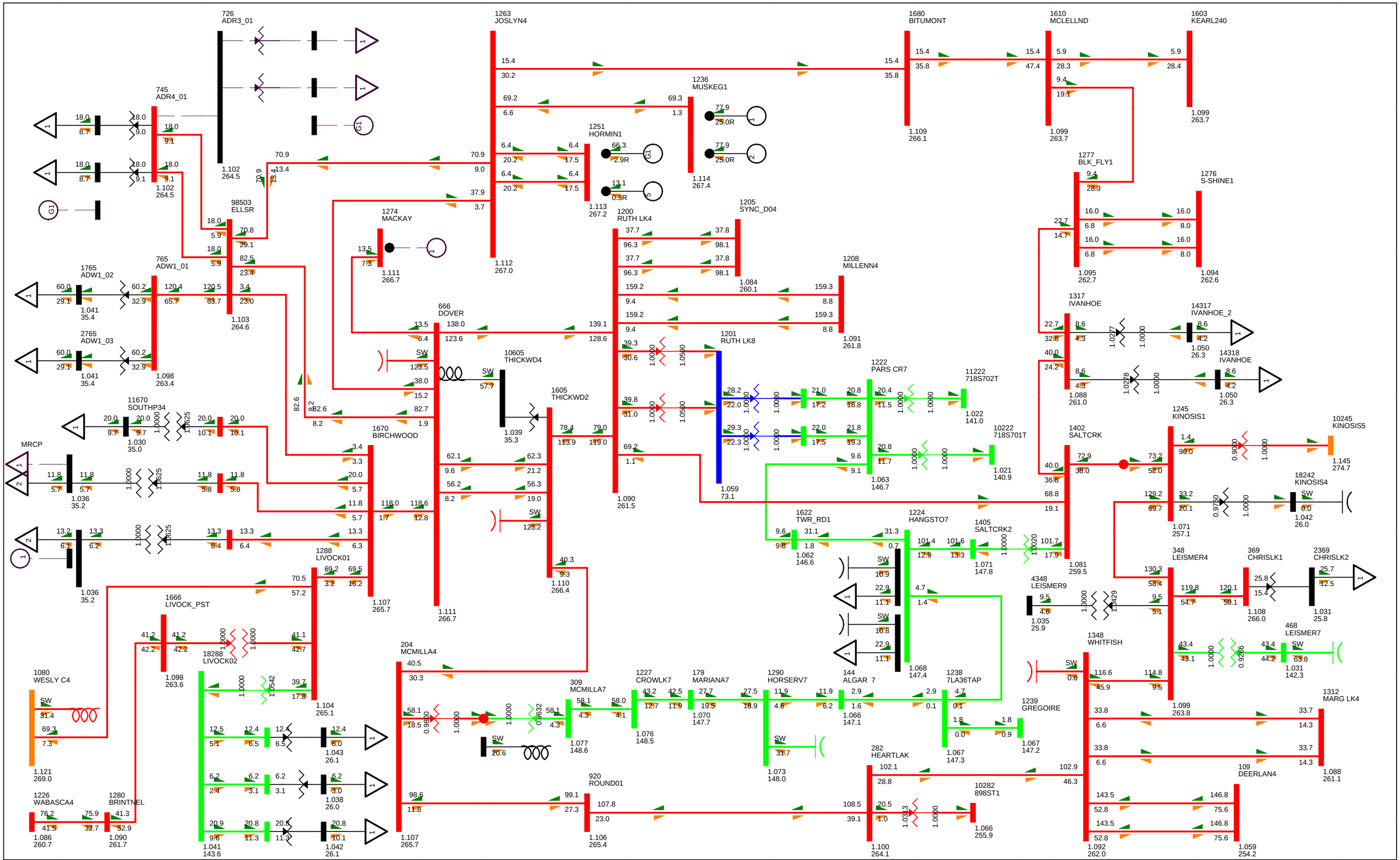
726
ADR3_01
745
ADR4_01
1.102
264.5
98503
ELLSR
1.103
264.6
765
ADW1_01
1.098
263.4
1765
ADW1_02
1.041
35.4
2765
ADW1_03
1.041
35.4
11670
SOUTHP34
1.030
35.0
MRCP
1.036
35.2
1.036
35.2
1288
LIVOCK01
1666
LIVOCK_PST
1.104
265.1
18288
LIVOCK02
1.098
263.6
1080
WESLY C4
1.121
269.0
1226
WABASCA4
1.086
260.7
1280
BRINTNEL
1.090
261.7
1041
143.6
1670
BIRCHWOOD
1.107
265.7
1274
MACKAY
1.111
266.7
1263
JOSLYN4
1.112
267.0
1251
HORMIN1
1.113
267.2
666
DOVER
1.111
266.7
10605
THICKWD4
1.039
35.3
1605
THICKWD2
1.110
266.4
204
MCMILLA4
1.107
265.7
1200
RUTH LK4
1.090
261.5
1236
MUSKEG1
1.114
267.4
1205
SYNC_D04
1.084
260.1
1208
MILLENN4
1.091
261.8
1201
RUTH LK8
1.059
73.1
309
MCMILLA7
1.077
148.6
1227
CROWLK7
1.076
148.5
179
MARIANA7
1.070
147.7
1290
HORSERV7
1.073
148.0
144
ALGAR 7
1.066
147.1
1222
PARS CR7
1.063
146.7
11222
718S702T
1.022
141.0
10222
718S701T
1.021
140.9
1622
TWR_RD1
1.062
146.6
1224
HANGSTO7
1.068
147.4
1405
SALTCRK2
1.071
147.8
1238
7LA36TAP
1.067
147.3
1239
GREGOIRE
1.067
147.2
920
ROUND01
1.106
265.4
282
HEARTLAK
1.100
264.1
10282
898ST1
1.066
255.9
1680
BITUMONT
1.109
266.1
1610
MCLELLND
1.099
263.7
1603
KEARL240
1.099
263.7
1277
BLK_FLY1
1.095
262.7
1276
S-SHINE1
1.094
262.6
1317
IVANHOE
1.088
261.0
14317
IVANHOE_2
1.050
26.3
14318
IVANHOE
1.050
26.3
1402
SALTCRK
1.035
25.9
1245
KINOSIS1
1.071
257.1
10245
KINOSIS5
1.145
274.7
18242
KINOSIS4
1.042
26.0
1081
259.5
348
LEISMER4
1.108
266.0
369
CHRISLK1
2369
CHRISLK2
1.031
25.8
4348
LEISMER9
1.035
25.9
468
LEISMER7
1.031
142.3
1348
WHITFISH
1.092
262.0
1312
MARG LK4
1.088
261.1
109
DEERLAN4
1.059
254.2
1043
26.1
1038
26.0
1042
26.1
1110
266.4
1099
263.8
1145
274.7
1100
264.1
1022
141.0
1091
261.8
1084
260.1
1076
148.5
1077
148.6
1111
266.7
1112
267.0
1113
267.2
1114
267.4
1099
263.7
1095
262.7
1094
262.6
1088
261.0
1050
26.3
1050
26.3
1071
257.1
1042
26.0
1108
266.0
1031
25.8
1031
142.3
1088
261.1
1059
254.2
1066
255.9
1063
146.7
1067
147.2
1067
147.3
1071
147.8
1062
146.6
1081
259.5
1068
147.4
1073
148.0
1070
147.7
1066
147.1
1090
261.5
1091
261.8

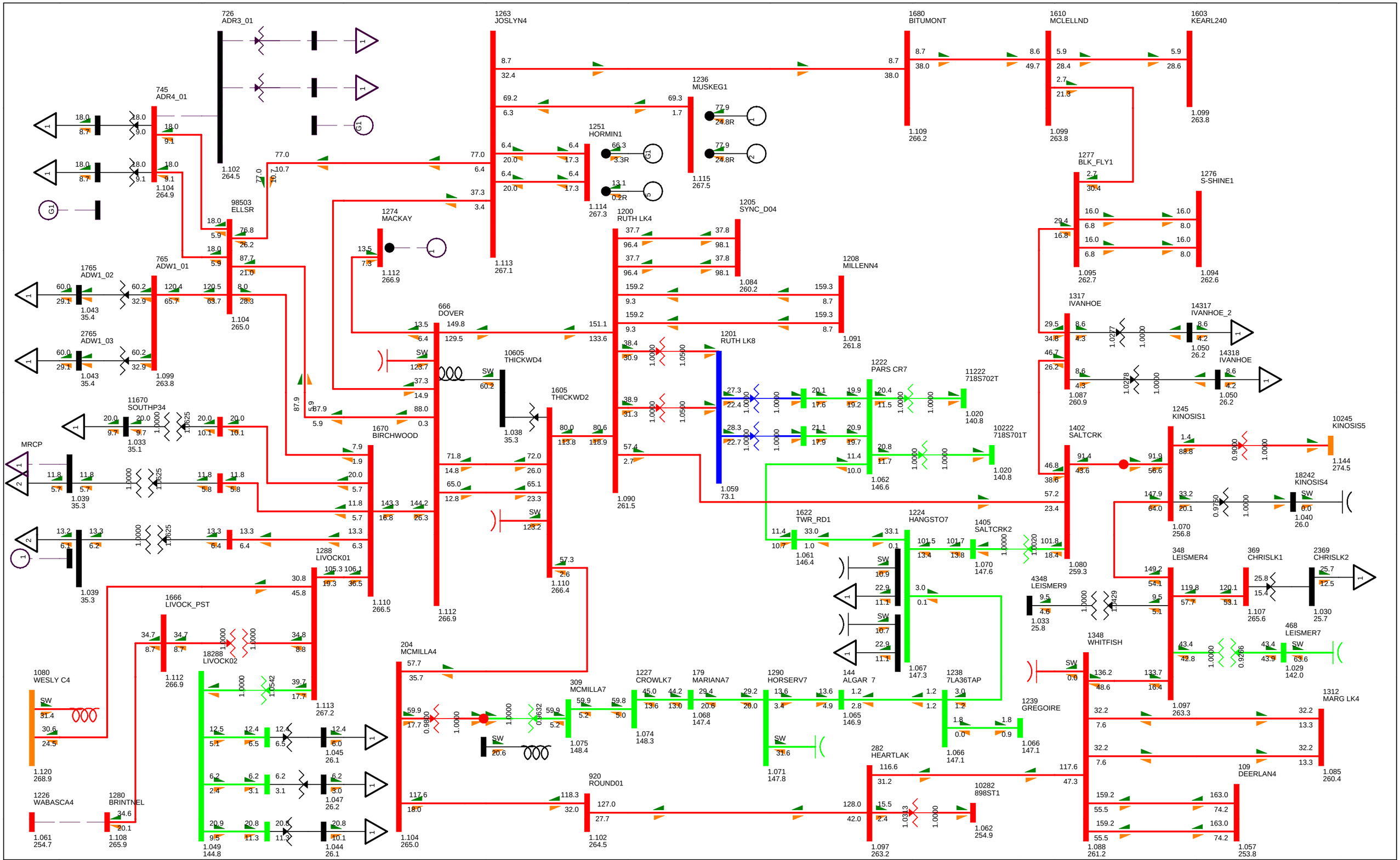

BC - Alberta (IMPORT)786.9 MW

2015SP BASE CASE
SWINGBUS 1520 FOR FC-2009-5:2015-10-31:14:14--1--1-0-0
WED, JUL 27 2011 11:14

2015 NW FMM STUDY

Figure E-2015SP-2

Bus - VOLTAGE (kV/PU)
Branch - MW/Mvar
Equipment - MW/Mvar
100.0%RATEA
1.120OV 0.950UV
kV: <=34.500 <=69.000 <=138.000 <=240.000 <=500.000 >500.000

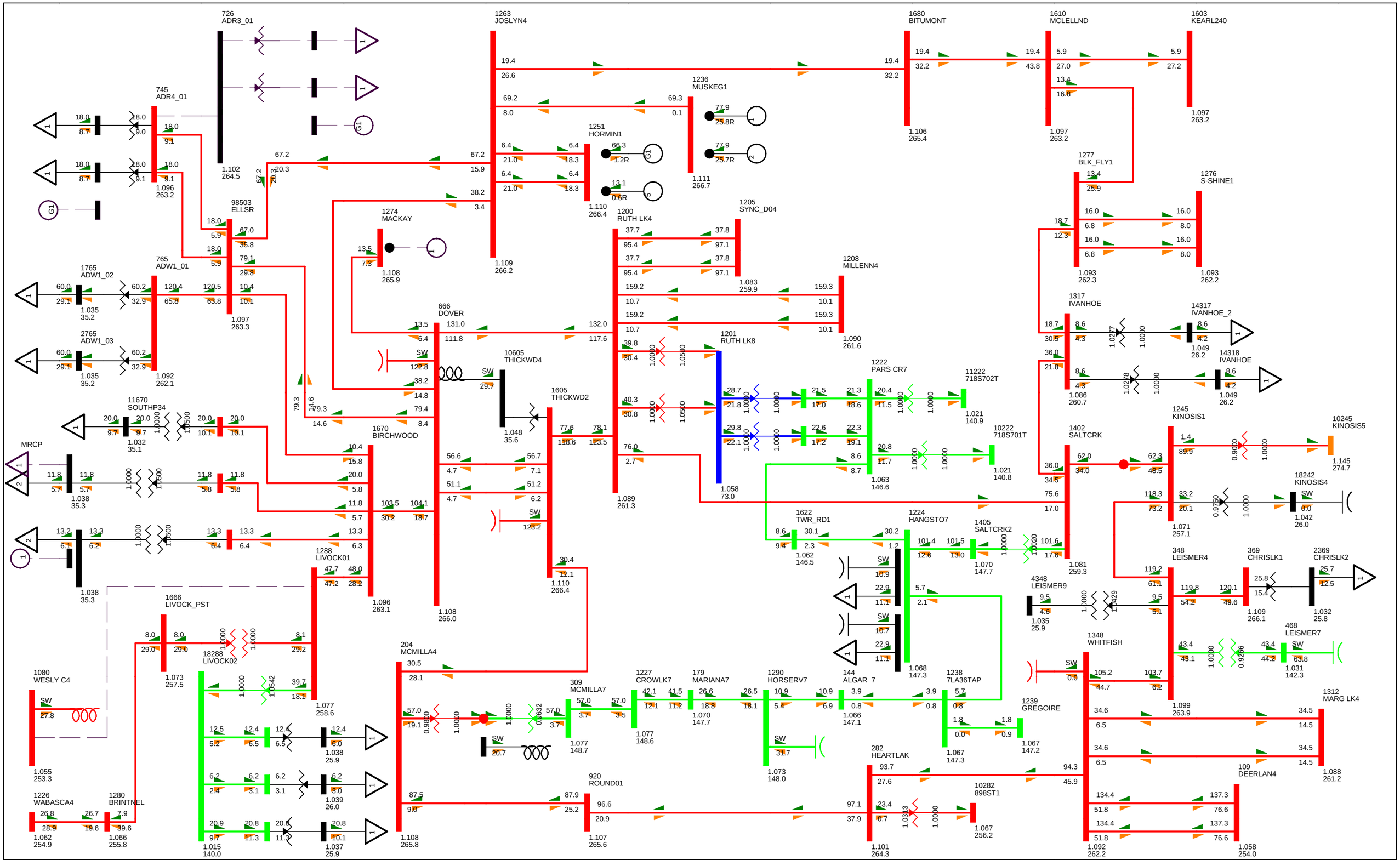

BC - Alberta (IMPORT)792.4 MW

2015SP BASE CASE
SWINGBUS 1520 FOR FC-2009-5:2015-10-31:14:14--1--1-0-0
WED, JUL 27 2011 11:14

2015 NW FMM STUDY

Figure E-2015SP-3

Bus - VOLTAGE (kV/PU)
Branch - MW/Mvar
Equipment - MW/Mvar
100.0%RATEA
1.120OV 0.950UV
kV: <=34.500 <=69.000 <=138.000 <=240.000 <=500.000 >500.000

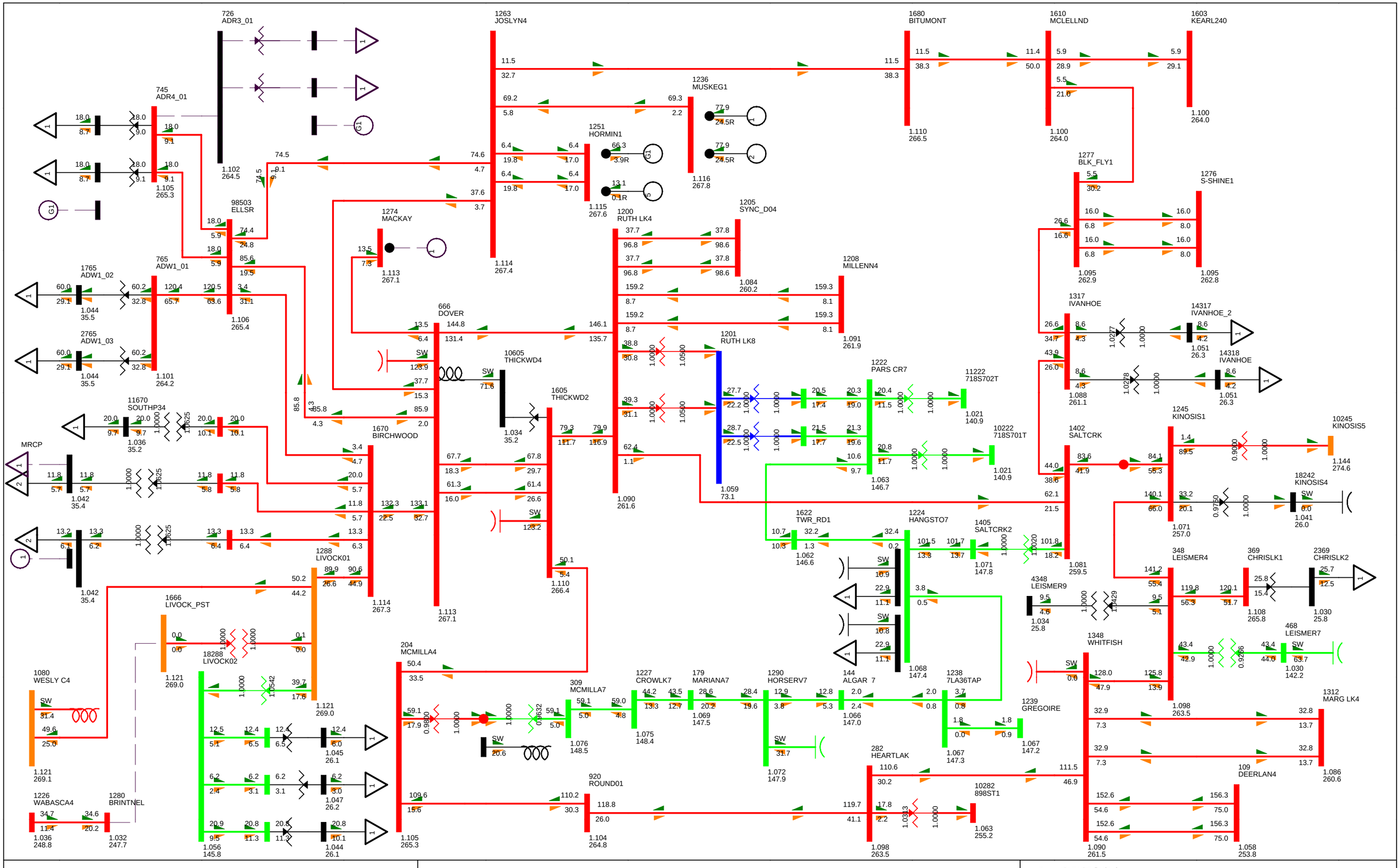

BC - Alberta (IMPORT)784.7 MW

2015SP BASE CASE
SWINGBUS 1520 FOR FC-2009-5:2015-10-31:14:14--1--1-0-0
WED, JUL 27 2011 11:14

2015 NW FMM STUDY

Figure E-2015SP-4

Bus - VOLTAGE (kV/PU)
Branch - MW/Mvar
Equipment - MW/Mvar
100.0%RATEA
1.120OV 0.950UV
kV: <=34.500 <=69.000 <=138.000 <=240.000 <=500.000 >500.000

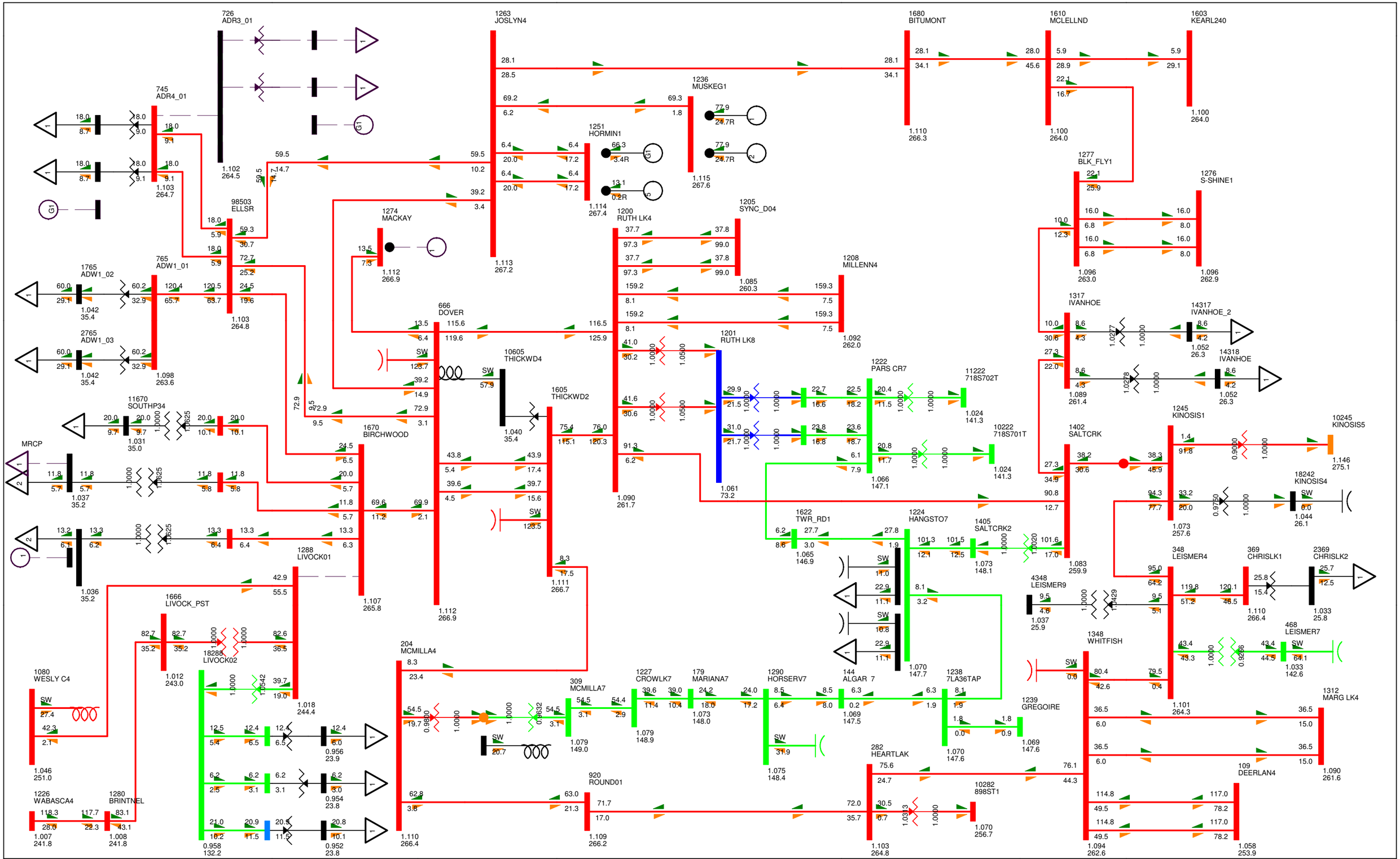

BC - Alberta (IMPORT)802.3 MW

TASMO MODEL; OUTPUT GENERATED 2010-03-01 14:32:47
SWINGBUS 1520 FOR FC-2009-5:2015-10-31:14:14--1--1-0-0
THU, JUL 28 2011 9:35

2015 NW FMM STUDY

Figure E-2015SP-5

Bus - VOLTAGE (kV/PU)
Branch - MW/Mvar
Equipment - MW/Mvar
100.0%RATEA
1.120OV 0.950UV
kV: <=34.500 <=69.000 <=138.000 <=240.000 <=500.000 >500.000

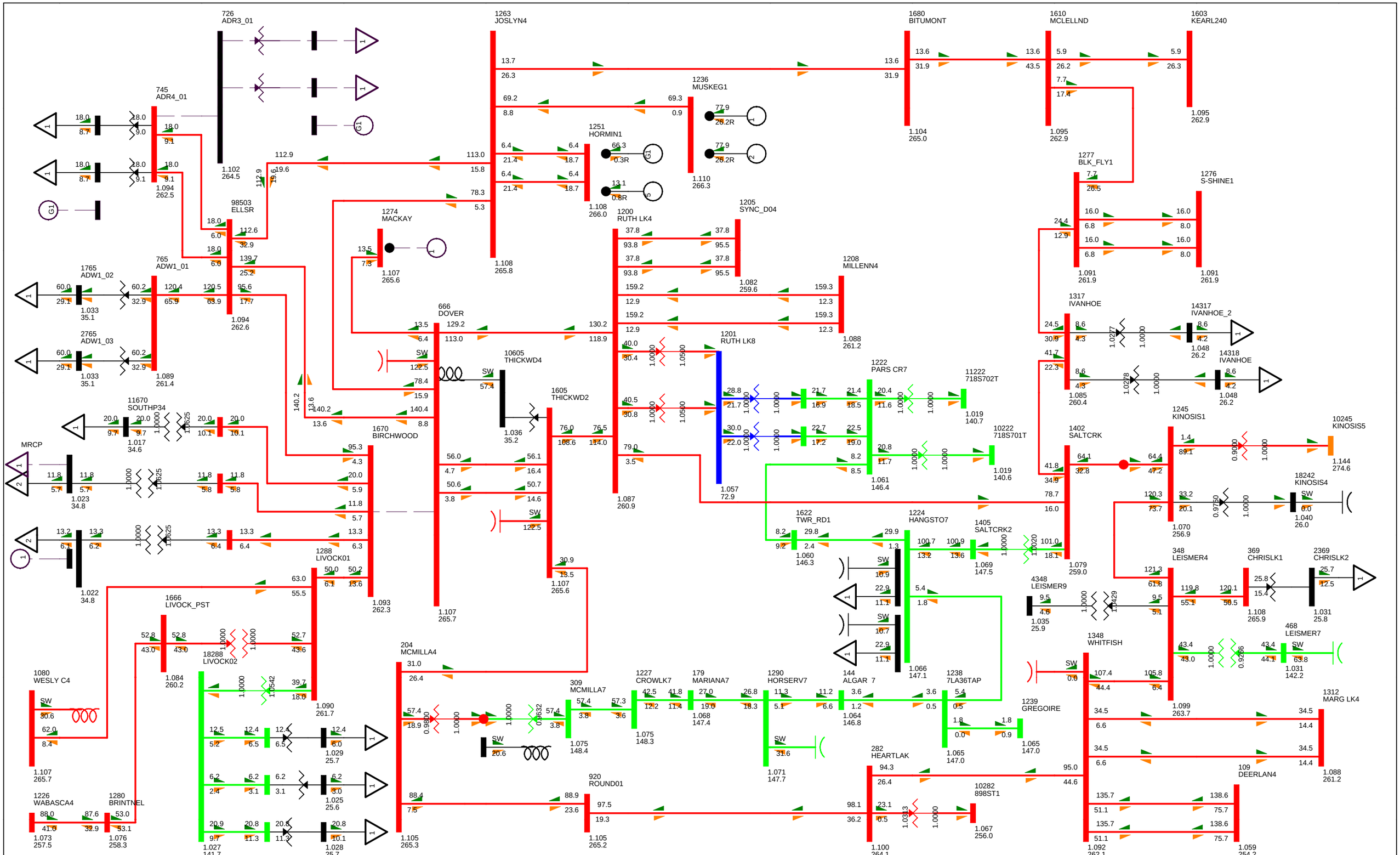

BC - Alberta (IMPORT)785.4 MW

2015SP BASE CASE
SWINGBUS 1520 FOR FC-2009-5:2015-10-31:14:14--1--1-0-0
WED, JUL 27 2011 11:14

2015 NW FMM STUDY

Figure E-2015SP-6

Bus - VOLTAGE (kV/PU)
Branch - MW/Mvar
Equipment - MW/Mvar
100.0%RATEA
1.120OV 0.950UV
kV: <=34.500 <=69.000 <=138.000 <=240.000 <=500.000 >500.000

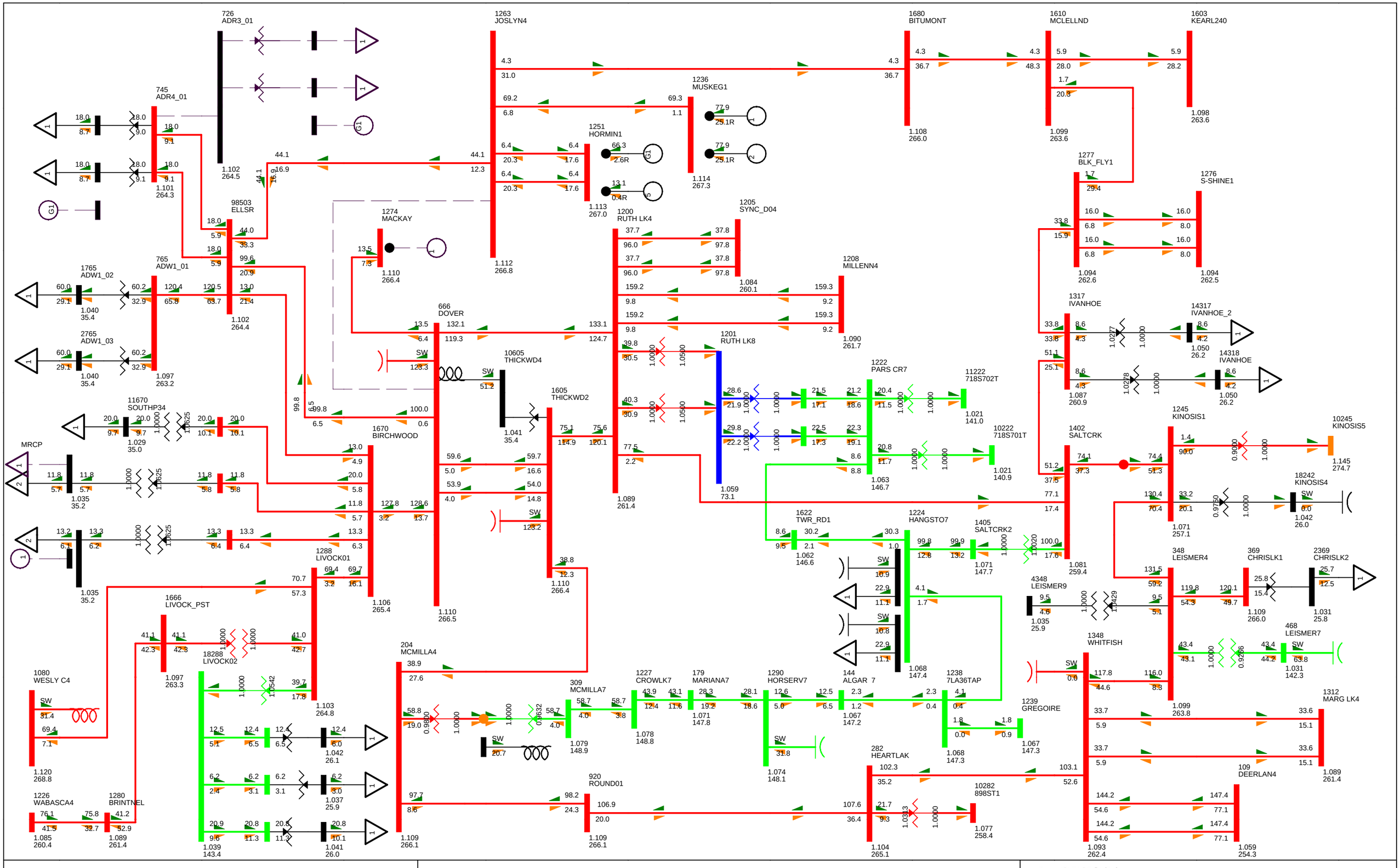

BC - Alberta (IMPORT)782.0 MW

2015SP BASE CASE
SWINGBUS 1520 FOR FC-2009-5:2015-10-31:14:14--1--1-0-0
WED, JUL 27 2011 11:15

2015 NW FMM STUDY

Figure E-2015SP-7

Bus - VOLTAGE (kV/PU)
Branch - MW/Mvar
Equipment - MW/Mvar
100.0%RATEA
1.120OV 0.950UV
kV: <=34.500 <=69.000 <=138.000 <=240.000 <=500.000 >500.000

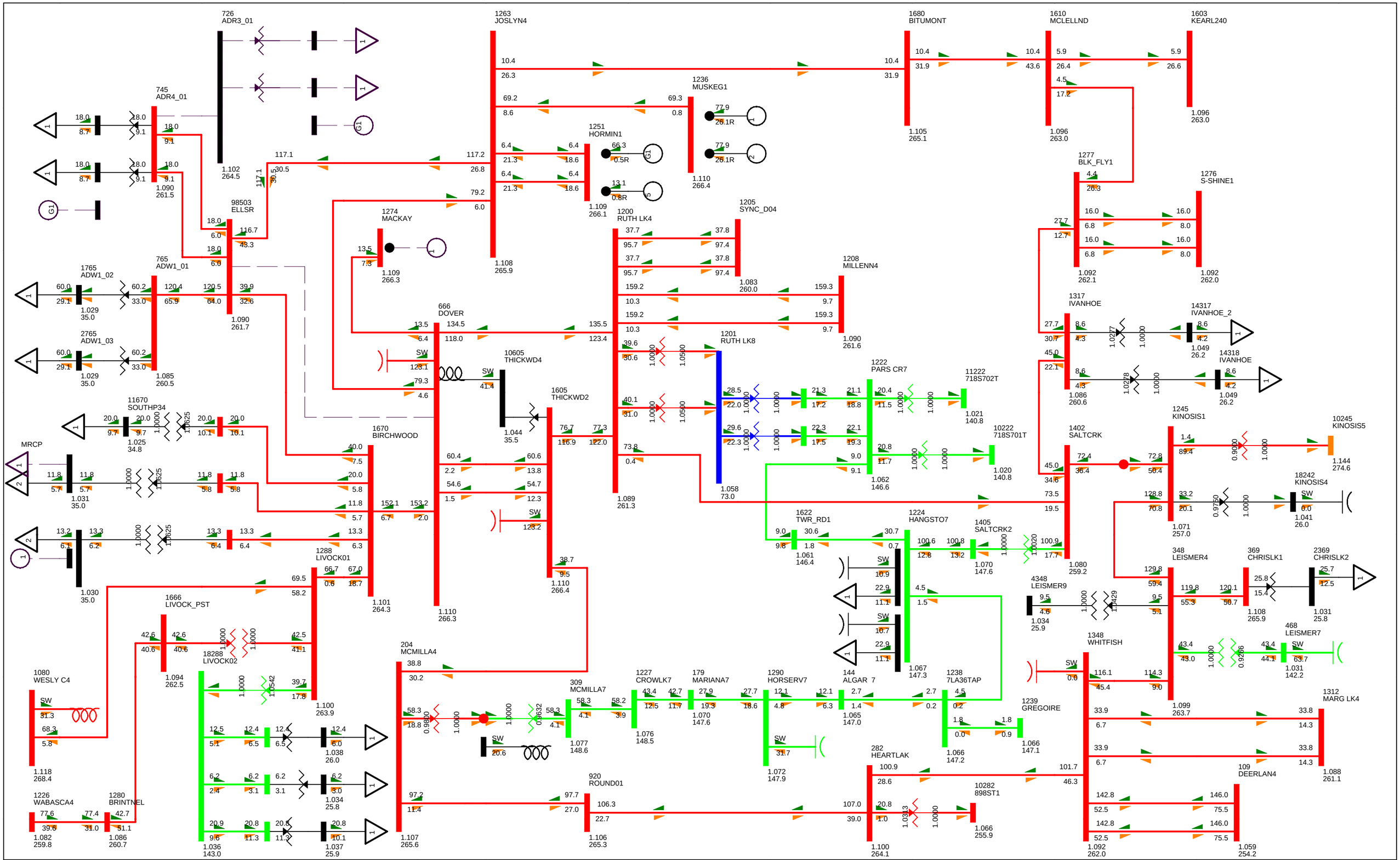

BC - Alberta (IMPORT)783.0 MW

2015SP BASE CASE
SWINGBUS 1520 FOR FC-2009-5:2015-10-31:14:14--1--1-0-0
WED, JUL 27 2011 11:15

2015 NW FMM STUDY

Figure E-2015SP-8

Bus - VOLTAGE (kV/PU)
Branch - MW/Mvar
Equipment - MW/Mvar
100.0%RATEA
1.120OV 0.950UV
kV: <=34.500 <=69.000 <=138.000 <=240.000 <=500.000 >500.000

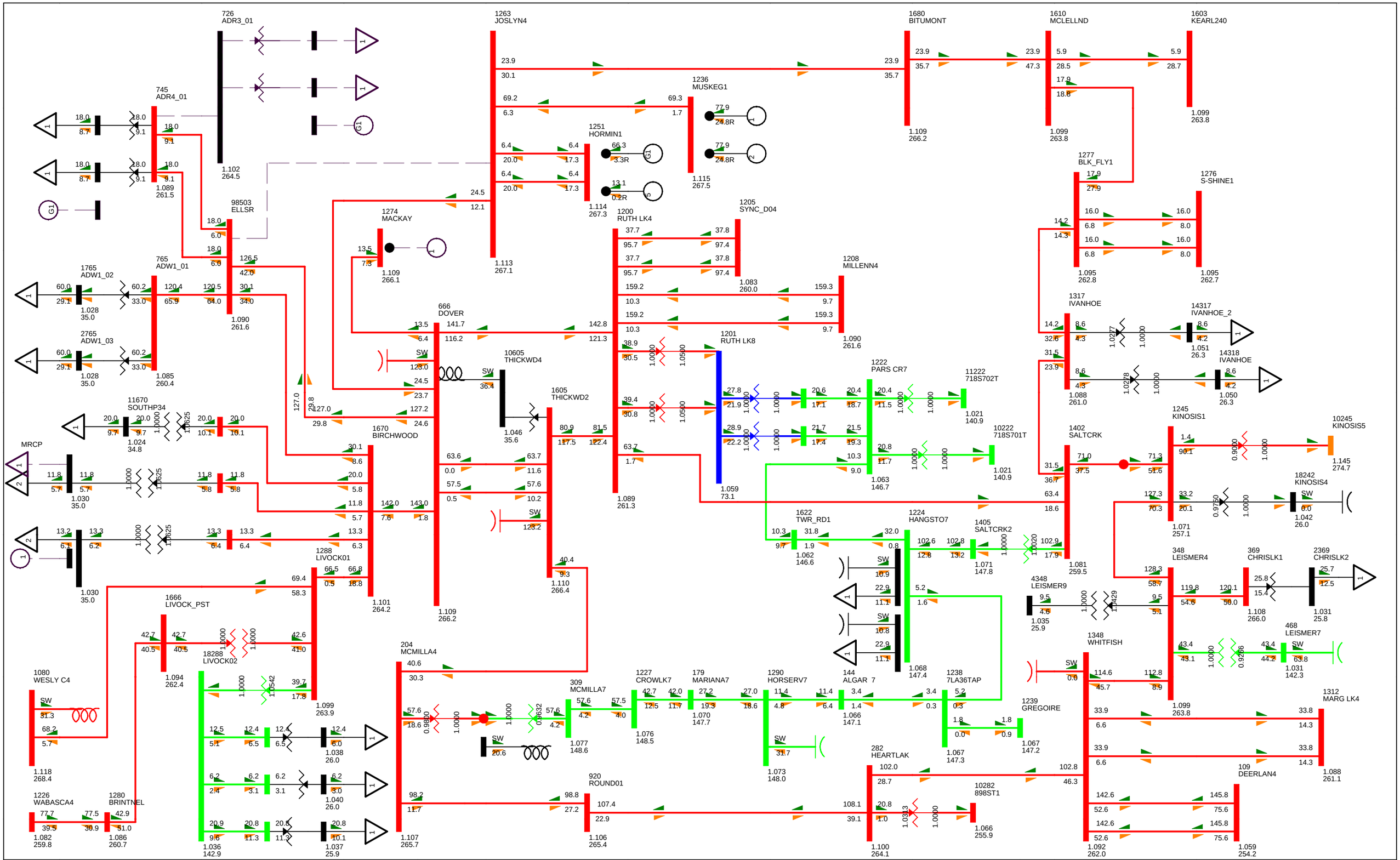

BC - Alberta (IMPORT)782.8 MW

2015SP BASE CASE
SWINGBUS 1520 FOR FC-2009-5:2015-10-31:14:14--1--1-0-0
WED, JUL 27 2011 11:15

2015 NW FMM STUDY

Figure E-2015SP-9

Bus - VOLTAGE (kV/PU)
Branch - MW/Mvar
Equipment - MW/Mvar
100.0%RATEA
1.120OV 0.950UV
kV: <=34.500 <=69.000 <=138.000 <=240.000 <=500.000 >500.000

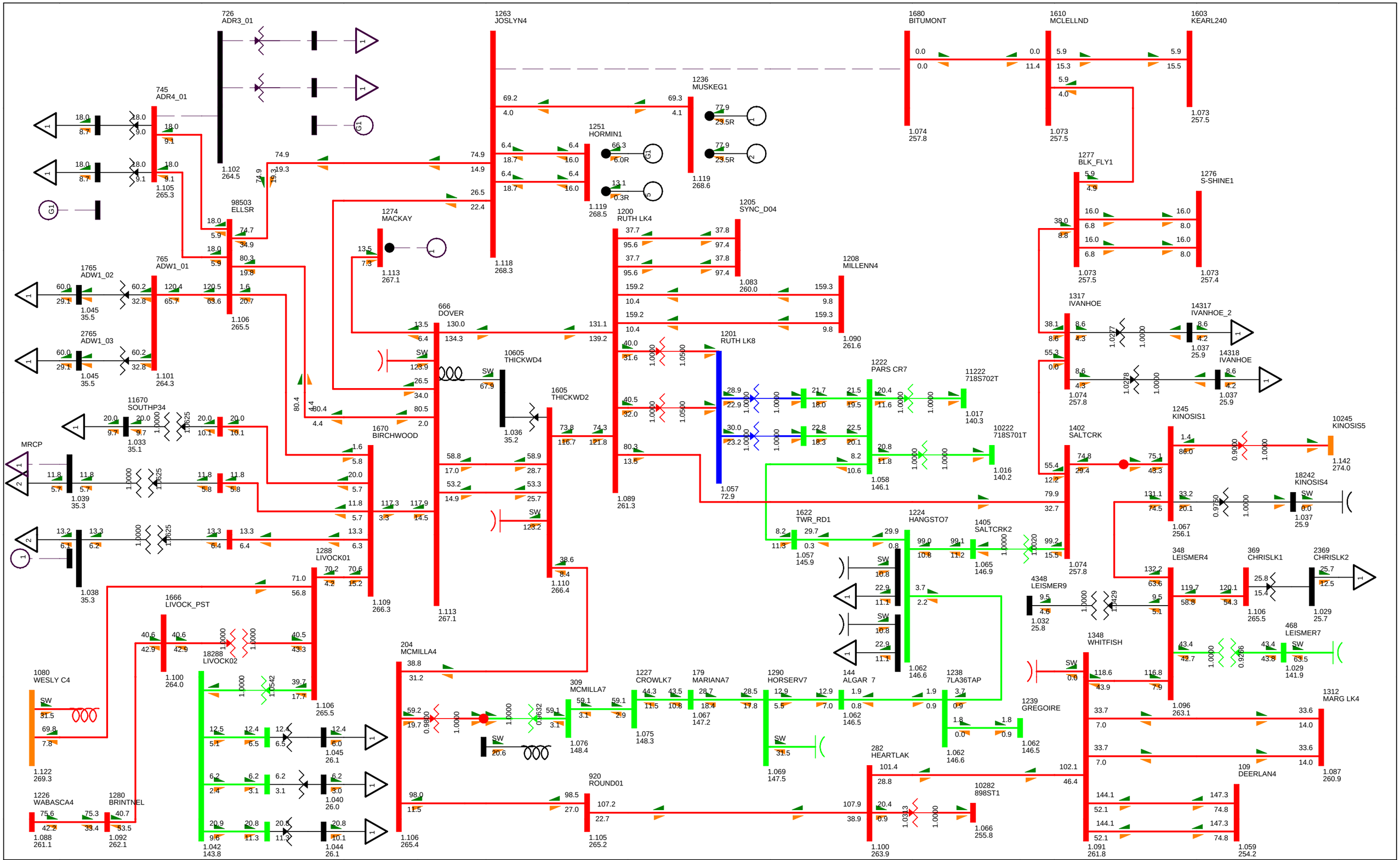

BC - Alberta (IMPORT)781.9 MW

2015SP BASE CASE
SWINGBUS 1520 FOR FC-2009-5:2015-10-31:14:14--1--1-0-0
WED, JUL 27 2011 11:15

2015 NW FMM STUDY

Figure E-2015SP-10

Bus - VOLTAGE (kV/PU)
Branch - MW/Mvar
Equipment - MW/Mvar
100.0%RATEA
1.120OV 0.950UV
kV: <=34.500 <=69.000 <=138.000 <=240.000 <=500.000 >500.000

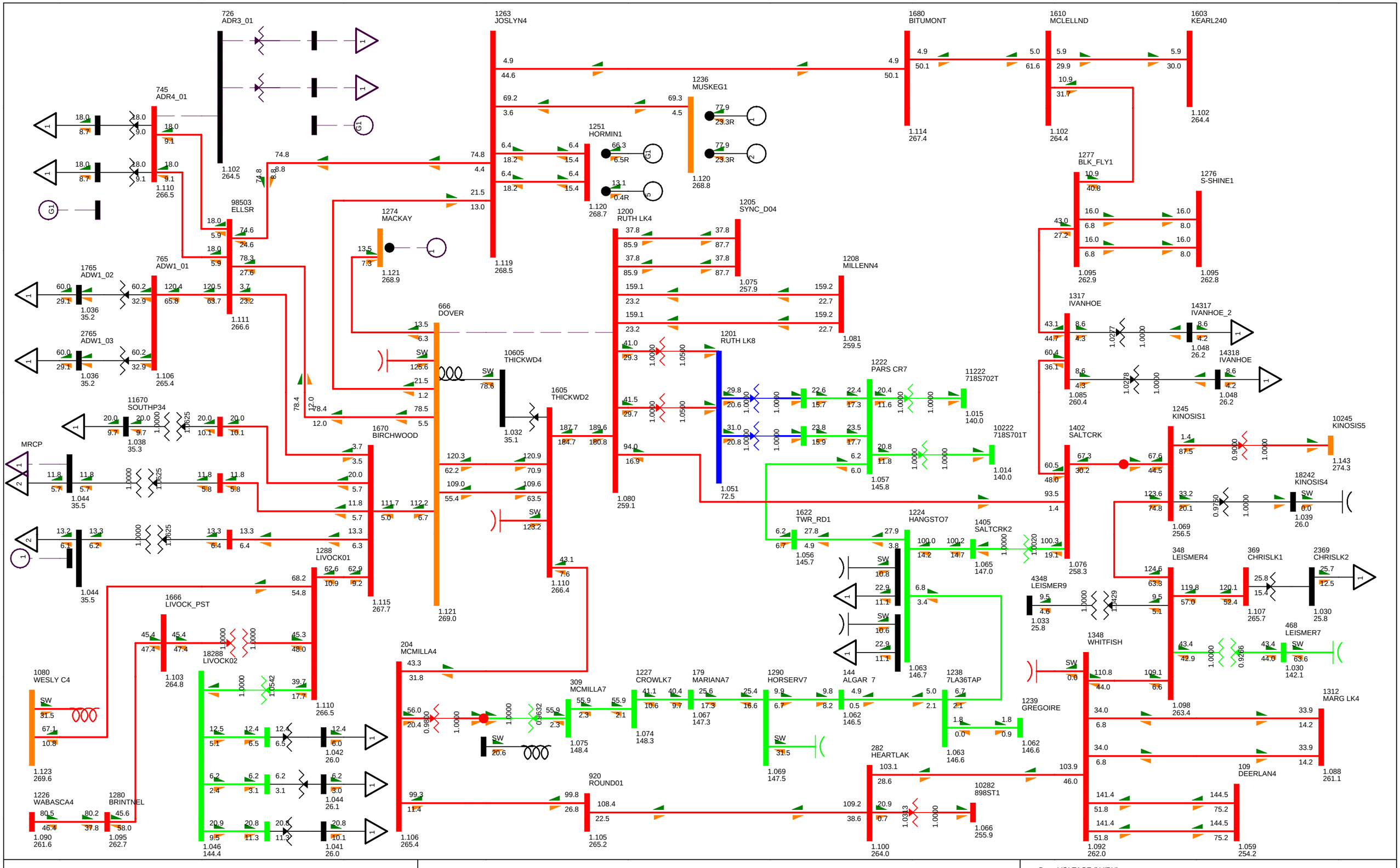

BC - Alberta (IMPORT)784.1 MW

2015SP BASE CASE
SWINGBUS 1520 FOR FC-2009-5:2015-10-31:14:14--1--1-0-0
WED, JUL 27 2011 11:15

2015 NW FMM STUDY

Figure E-2015SP-11

Bus - VOLTAGE (kV/PU)
Branch - MW/Mvar
Equipment - MW/Mvar

100.0%RATEA
1.120OV 0.950UV
kV: <=34.500 <=69.000 <=138.000 <=240.000 <=500.000 >500.000

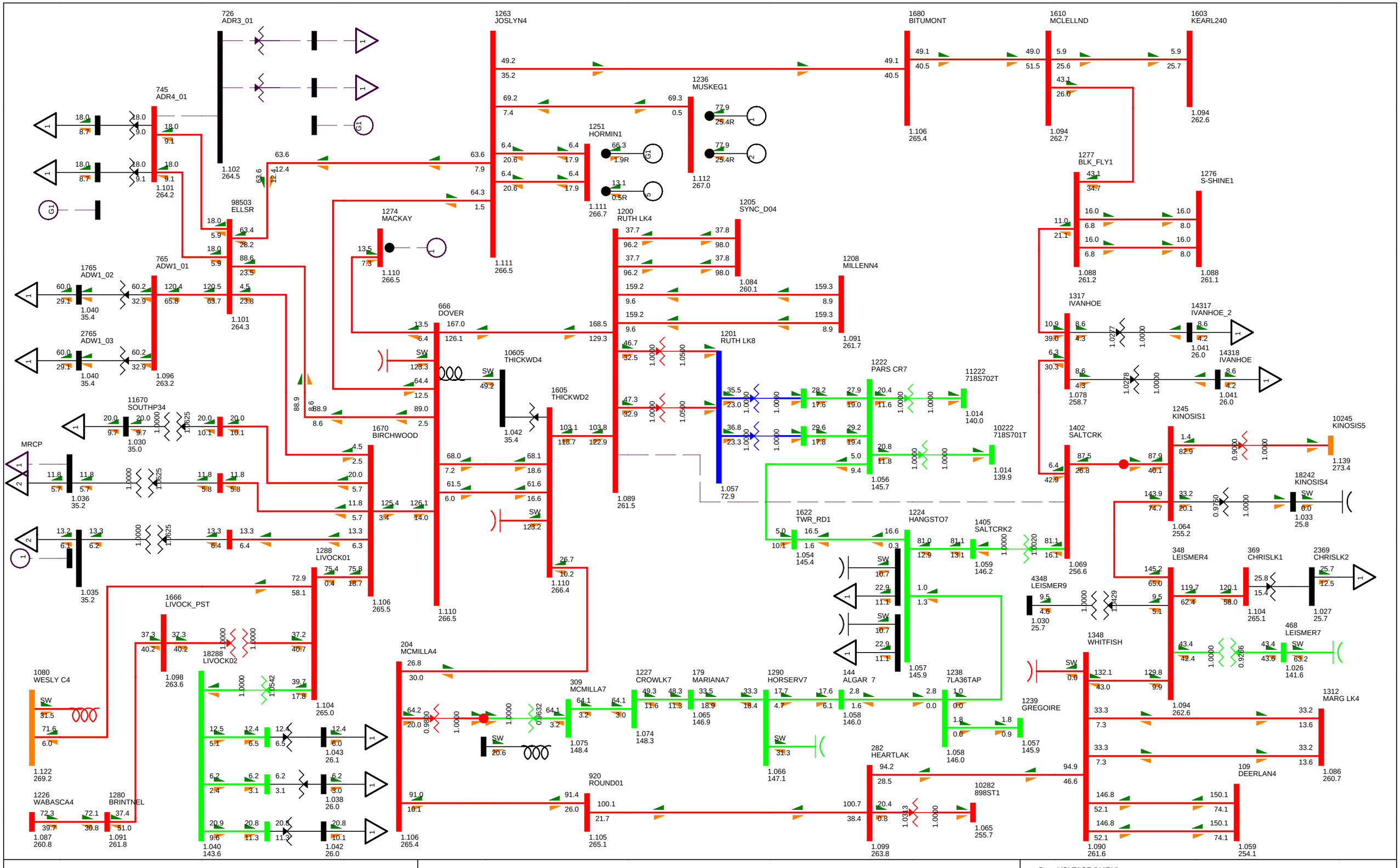

BC - Alberta (IMPORT)782.4 MW

2015SP BASE CASE
SWINGBUS 1520 FOR FC-2009-5:2015-10-31:14:14--1--1-0-0
WED, JUL 27 2011 11:15

2015 NW FMM STUDY

Figure E-2015SP-12

Bus - VOLTAGE (kV/PU)
Branch - MW/Mvar
Equipment - MW/Mvar

100.0%RATEA
1.120OV 0.950UV
kV: <=34.500 <=69.000 <=138.000 <=240.000 <=500.000 >500.000

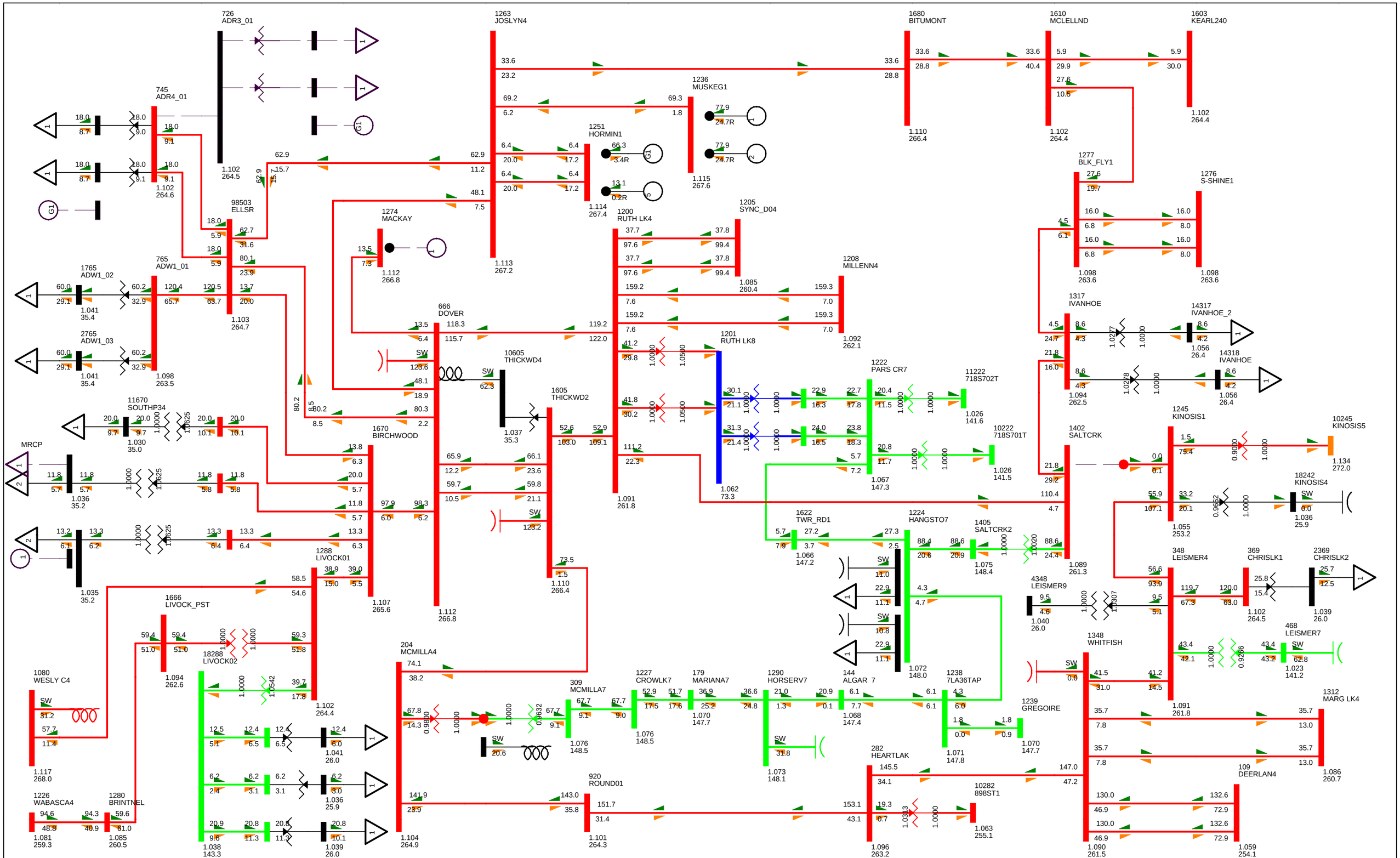

BC - Alberta (IMPORT)787.4 MW

2015SP BASE CASE
SWINGBUS 1520 FOR FC-2009-5:2015-10-31:14:14--1--1-0-0
WED, JUL 27 2011 11:15

2015 NW FMM STUDY

Figure E-2015SP-13

Bus - VOLTAGE (kV/PU)
Branch - MW/Mvar
Equipment - MW/Mvar
100.0%RATEA
1.120OV 0.950UV
kV: <=34.500 <=69.000 <=138.000 <=240.000 <=500.000 >500.000

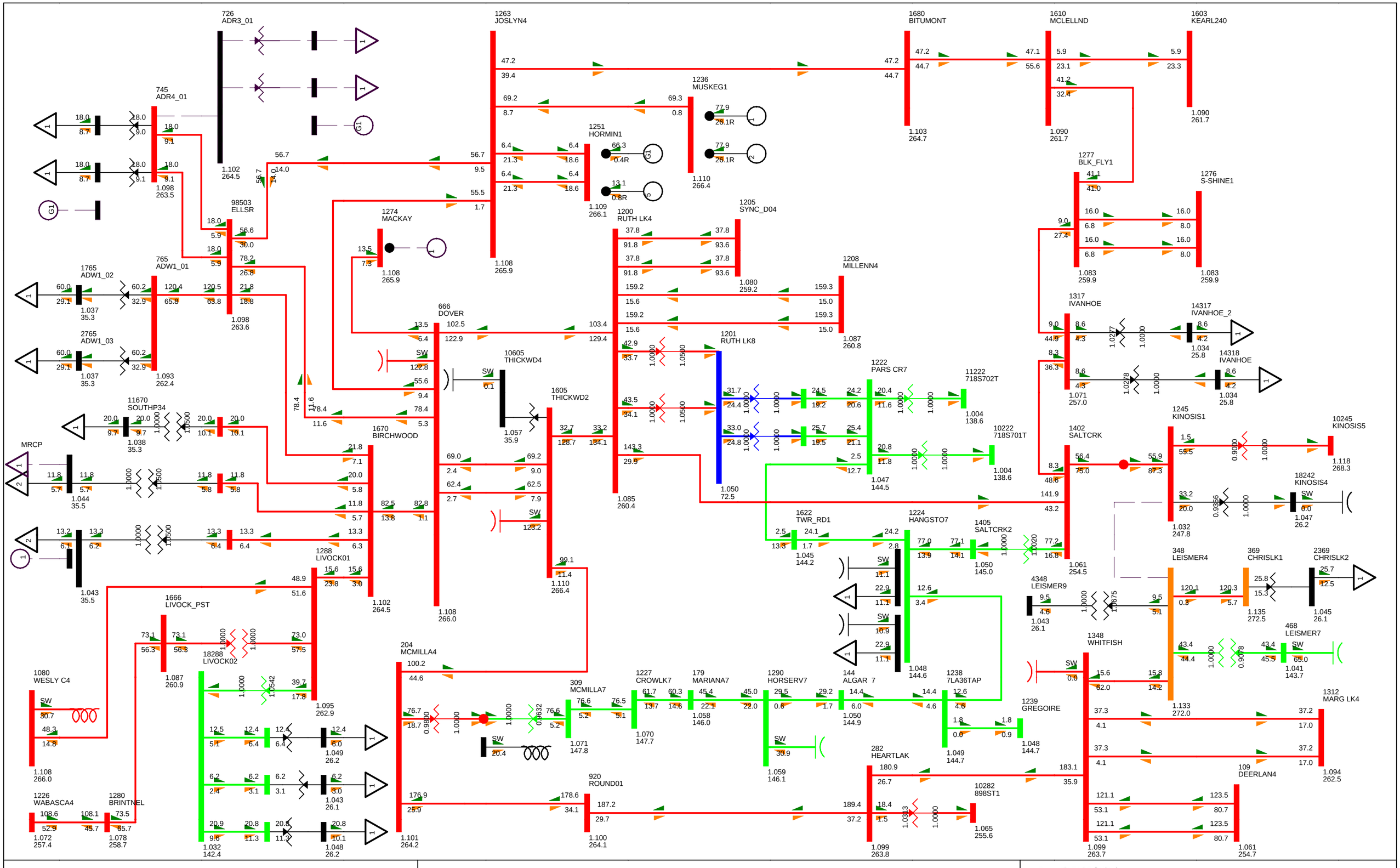

BC - Alberta (IMPORT)795.8 MW

2015SP BASE CASE
SWINGBUS 1520 FOR FC-2009-5:2015-10-31:14:14--1--1-0-0
WED, JUL 27 2011 11:15

2015 NW FMM STUDY

Figure E-2015SP-14

Bus - VOLTAGE (kV/PU)
Branch - MW/Mvar
Equipment - MW/Mvar
100.0%RATEA
1.120OV 0.950UV
kV: <=34.500 <=69.000 <=138.000 <=240.000 <=500.000 >500.000

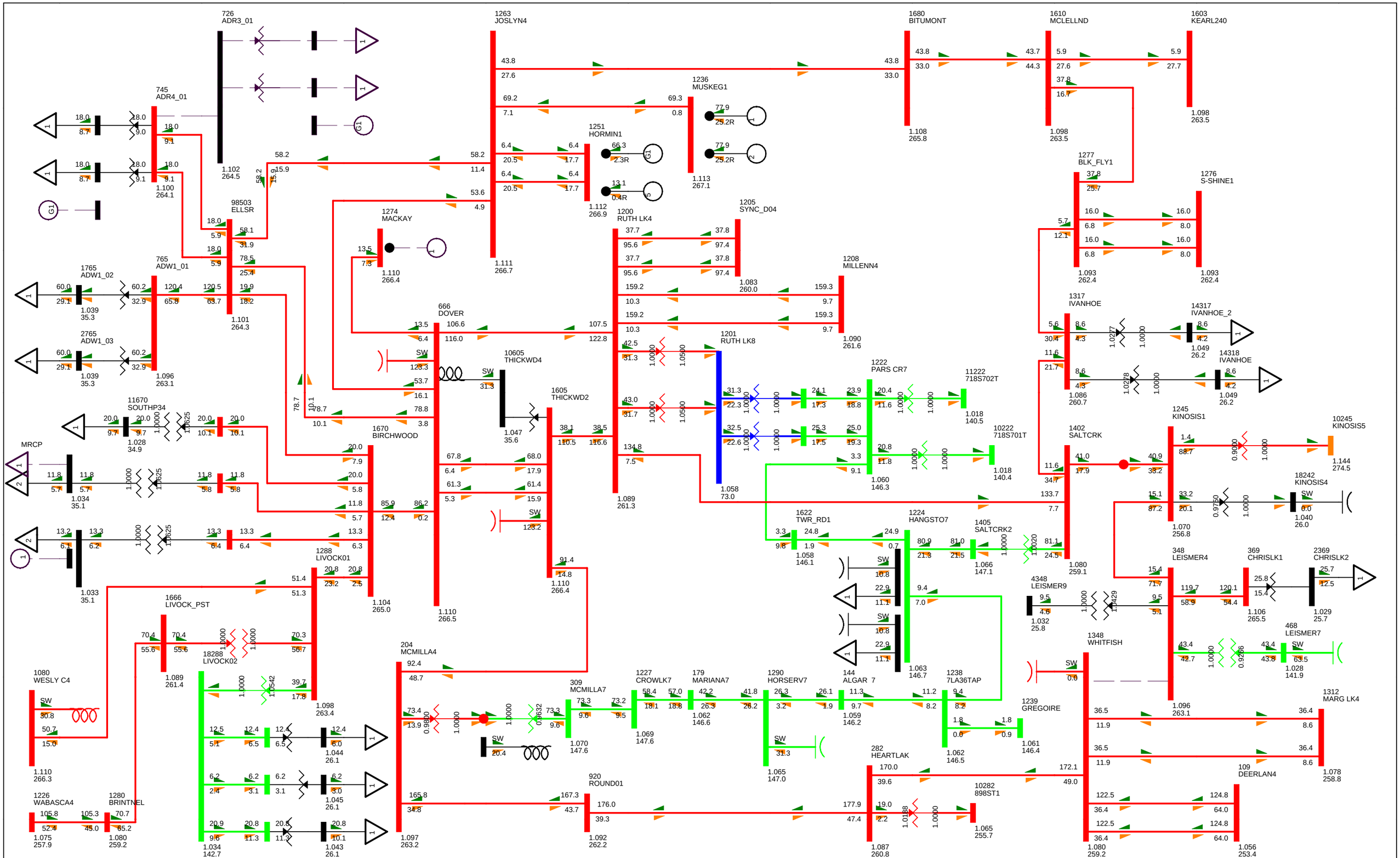

BC - Alberta (IMPORT)793.1 MW

2015SP BASE CASE
SWINGBUS 1520 FOR FC-2009-5:2015-10-31:14:14--1--1-0-0
WED, JUL 27 2011 11:15

2015 NW FMM STUDY

Figure E-2015SP-15

Bus - VOLTAGE (kV/PU)
Branch - MW/Mvar
Equipment - MW/Mvar
100.0%RATEA
1.120OV 0.950UV
kV: <=34.500 <=69.000 <=138.000 <=240.000 <=500.000 >500.000

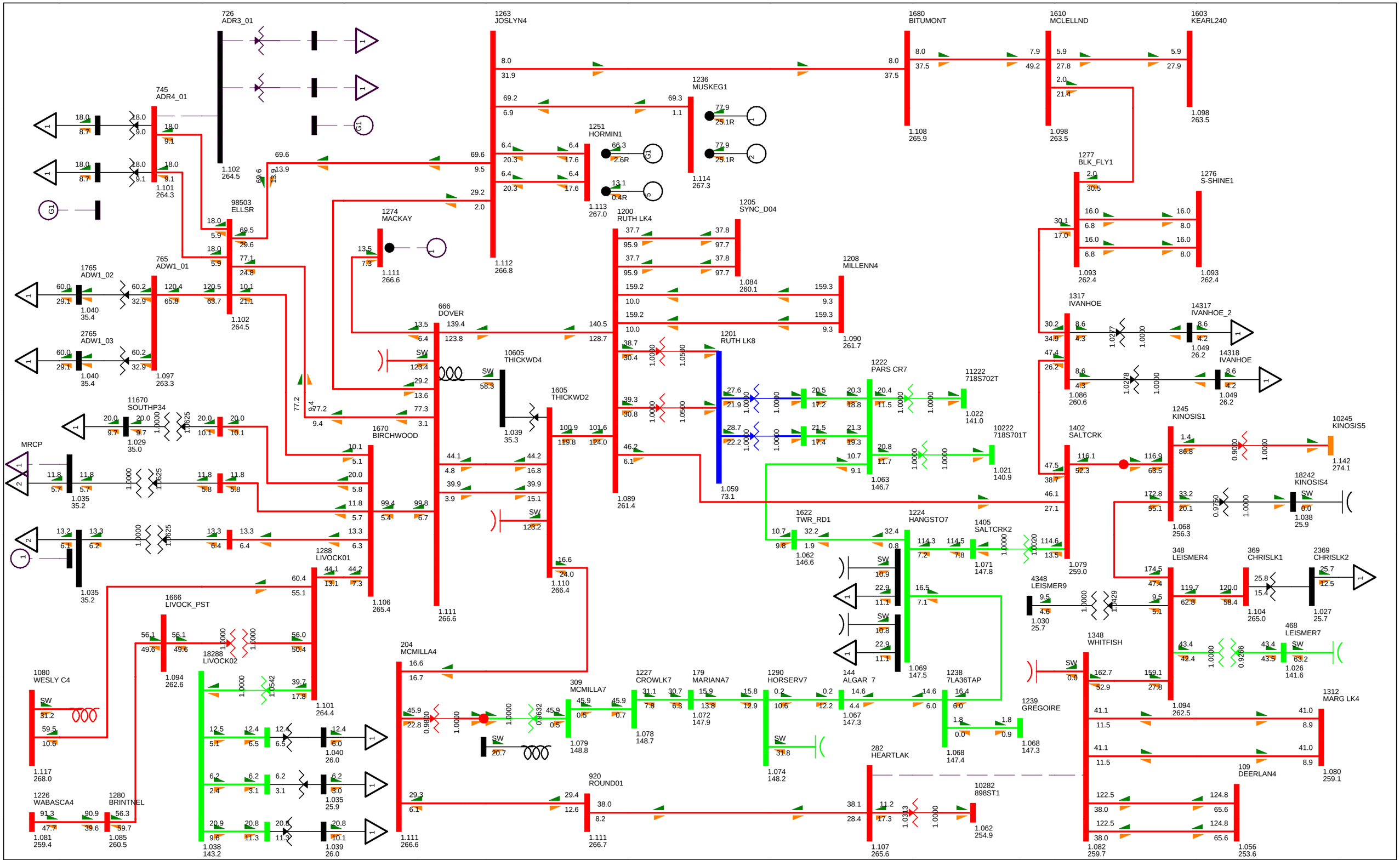

BC - Alberta (IMPORT)790.6 MW

2015SP BASE CASE
SWINGBUS 1520 FOR FC-2009-5:2015-10-31:14:14--1--1-0-0
WED, JUL 27 2011 11:16

2015 NW FMM STUDY

Figure E-2015SP-16

Bus - VOLTAGE (kV/PU)
Branch - MW/Mvar
Equipment - MW/Mvar
100.0%RATEA
1.120OV 0.950UV
kV: <=34.500 <=69.000 <=138.000 <=240.000 <=500.000 >500.000

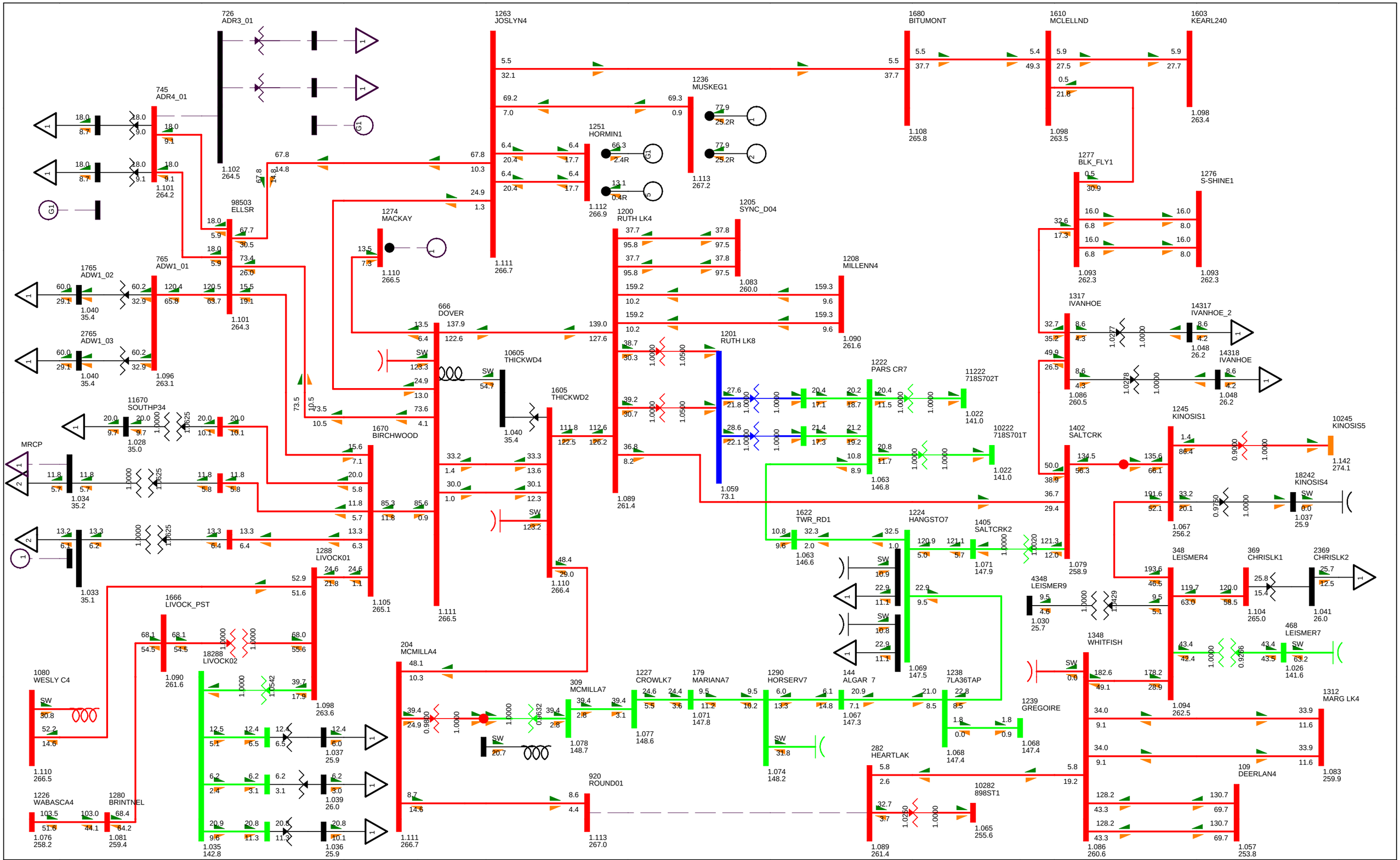

BC - Alberta (IMPORT)790.2 MW

2015SP BASE CASE
SWINGBUS 1520 FOR FC-2009-5:2015-10-31:14:14--1--1-0-0
WED, JUL 27 2011 11:16

2015 NW FMM STUDY

Figure E-2015SP-17

Bus - VOLTAGE (kV/PU)
Branch - MW/Mvar
Equipment - MW/Mvar
100.0%RATEA
1.120OV 0.950UV
kV: <=34.500 <=69.000 <=138.000 <=240.000 <=500.000 >500.000

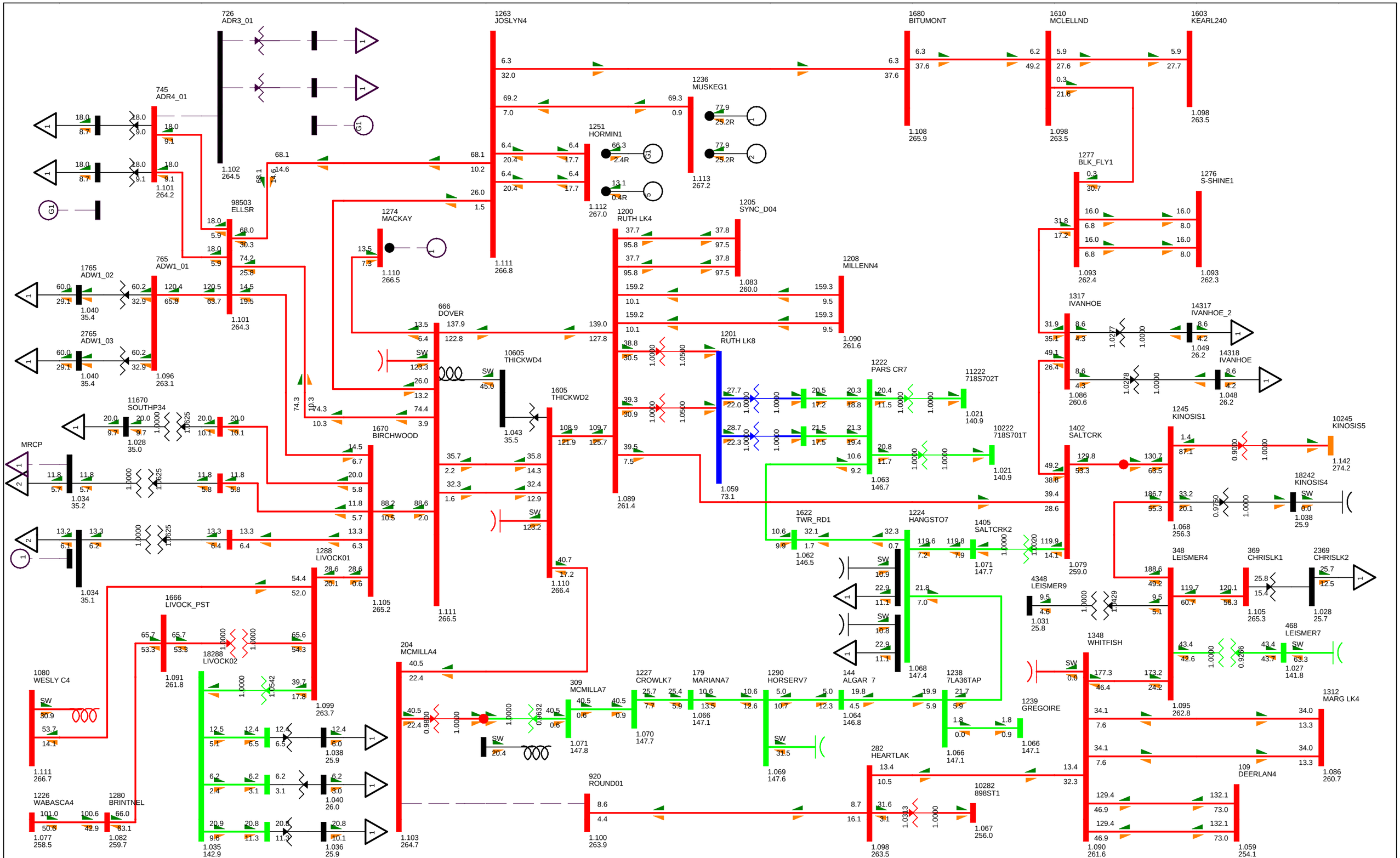

BC - Alberta (IMPORT)788.7 MW

2015SP BASE CASE
SWINGBUS 1520 FOR FC-2009-5:2015-10-31:14:14--1--1-0-0
WED, JUL 27 2011 11:17

2015 NW FMM STUDY

Figure E-2015SP-18

Bus - VOLTAGE (kV/PU)
Branch - MW/Mvar
Equipment - MW/Mvar
100.0%RATEA
1.120OV 0.950UV
kV: <=34.500 <=69.000 <=138.000 <=240.000 <=500.000 >500.000

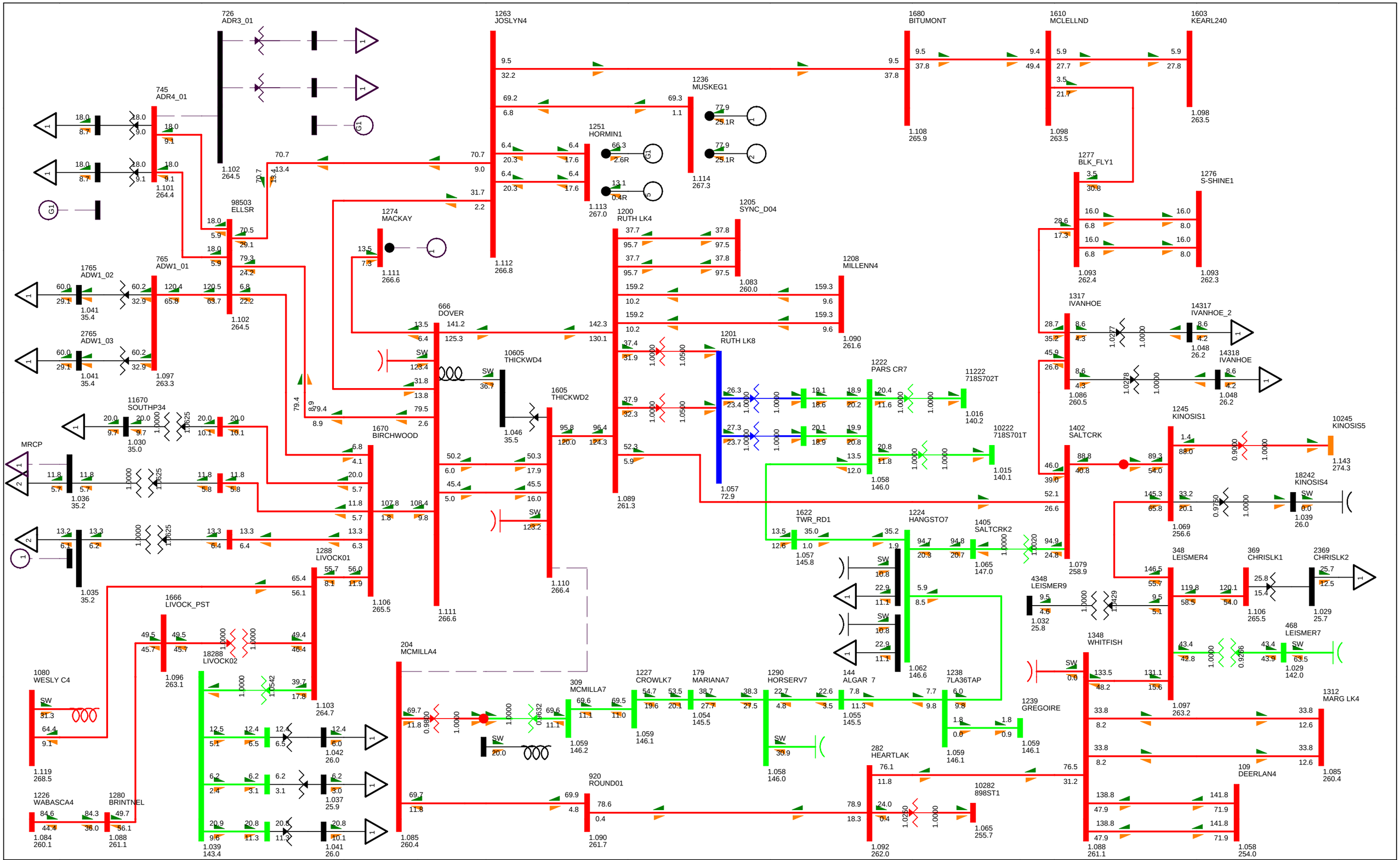

BC - Alberta (IMPORT)784.2 MW

2015SP BASE CASE
SWINGBUS 1520 FOR FC-2009-5:2015-10-31:14:14--1--1-0-0
WED, JUL 27 2011 11:17

2015 NW FMM STUDY

Figure E-2015SP-19

Bus - VOLTAGE (kV/PU)
Branch - MW/Mvar
Equipment - MW/Mvar
100.0%RATEA
1.120OV 0.950UV
kV: <=34.500 <=69.000 <=138.000 <=240.000 <=500.000 >500.000

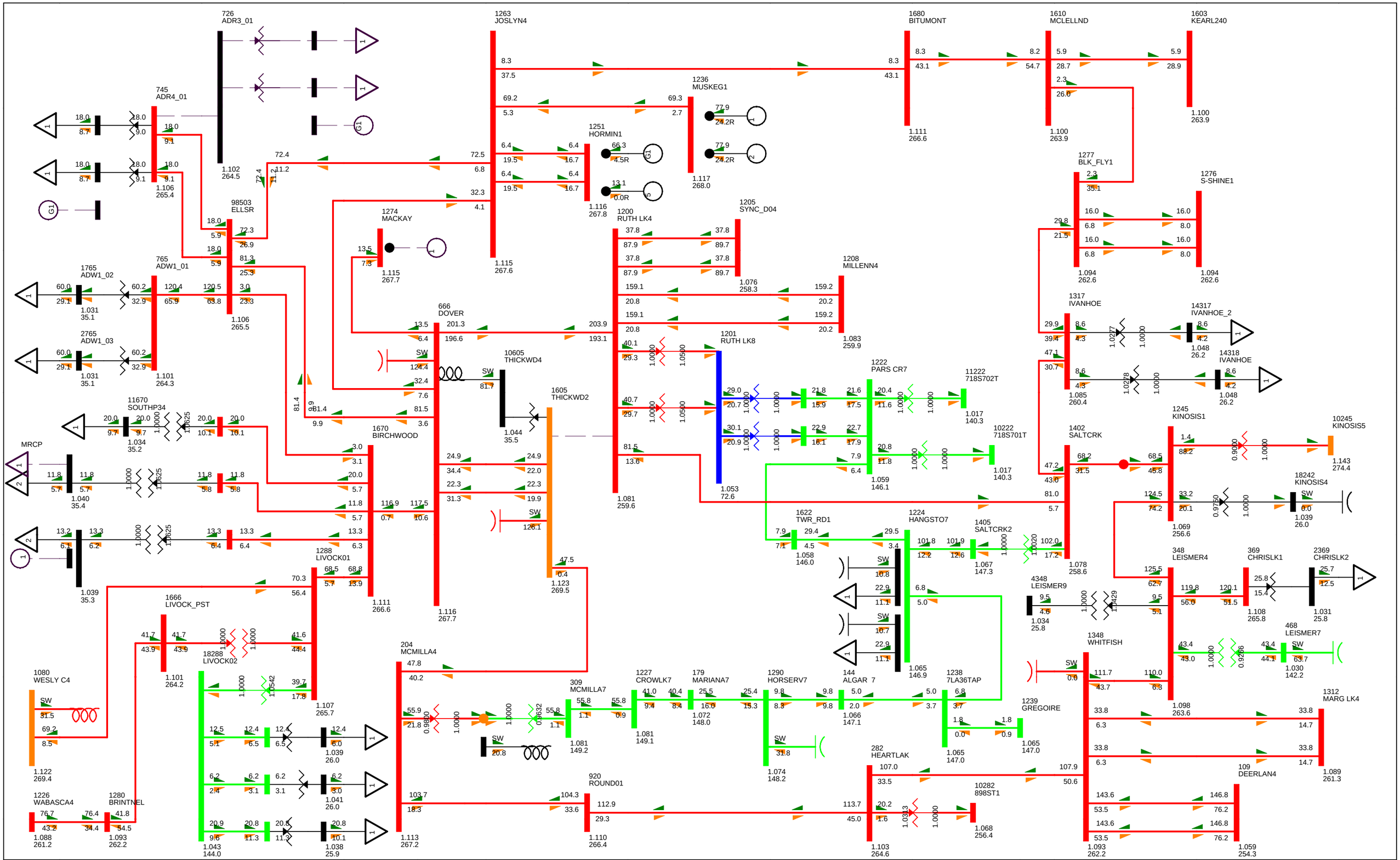

BC - Alberta (IMPORT)783.0 MW

2015SP BASE CASE
SWINGBUS 1520 FOR FC-2009-5:2015-10-31:14:14--1--1-0-0
WED, JUL 27 2011 11:17

2015 NW FMM STUDY

Figure E-2015SP-20

Bus - VOLTAGE (kV/PU)
Branch - MW/Mvar
Equipment - MW/Mvar
100.0%RATEA
1.120OV 0.950UV
kV: <=34.500 <=69.000 <=138.000 <=240.000 <=500.000 >500.000

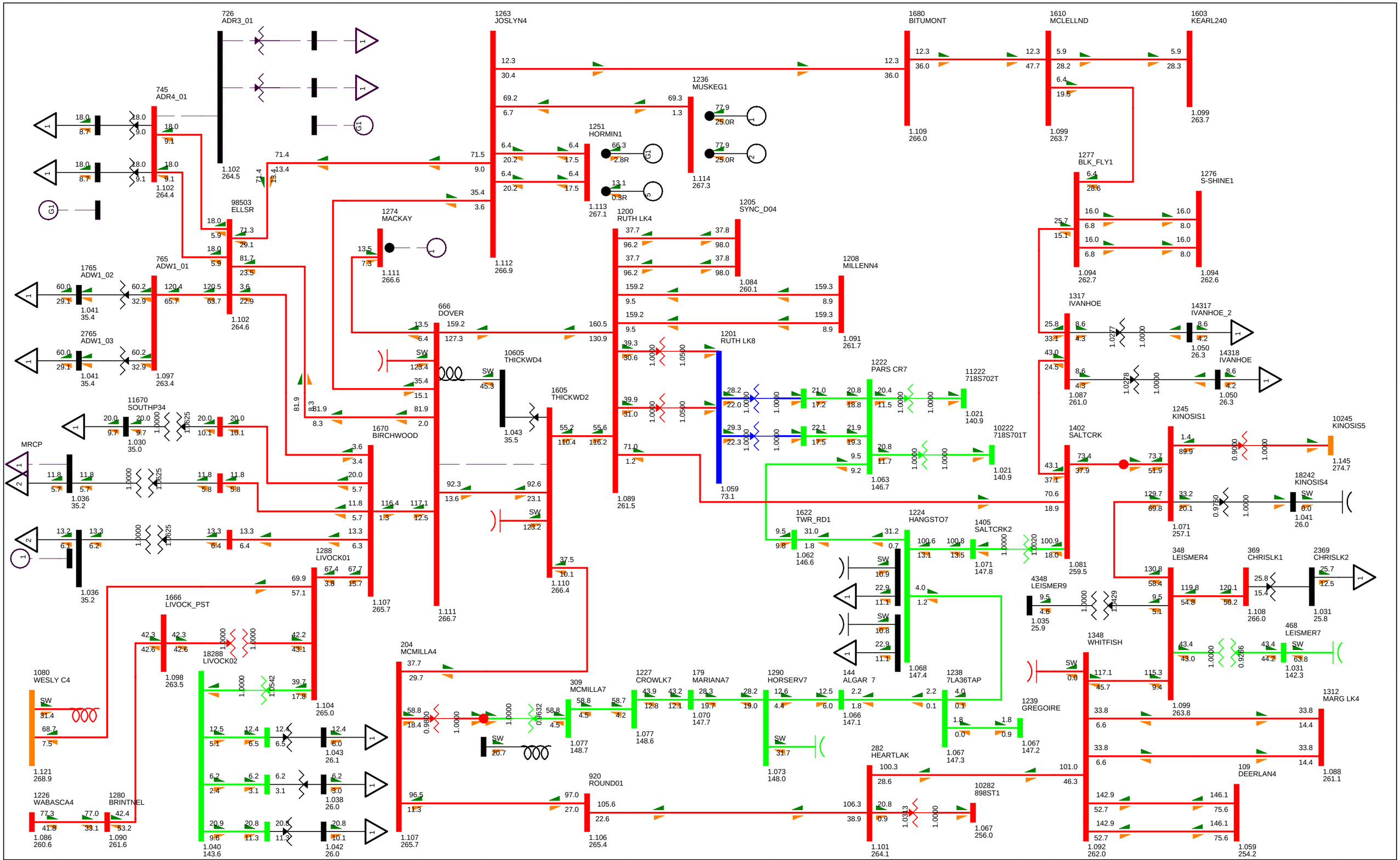

BC - Alberta (IMPORT)782.1 MW

2015SP BASE CASE
SWINGBUS 1520 FOR FC-2009-5:2015-10-31:14:14--1--1-0-0
WED, JUL 27 2011 11:17

2015 NW FMM STUDY

Figure E-2015SP-21

Bus - VOLTAGE (kV/PU)
Branch - MW/Mvar
Equipment - MW/Mvar
100.0%RATEA
1.120OV 0.950UV
kV: <=34.500 <=69.000 <=138.000 <=240.000 <=500.000 >500.000

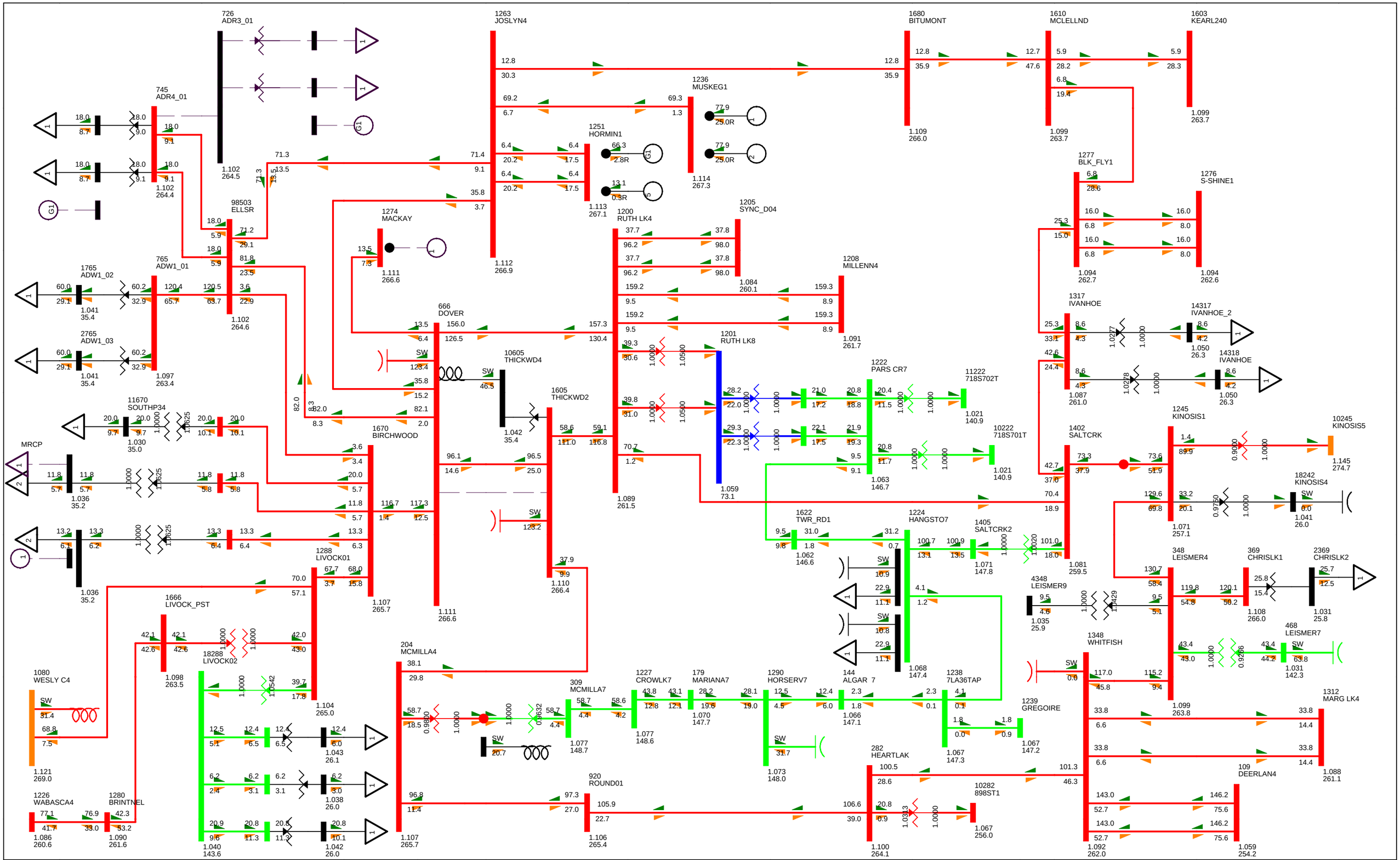

BC - Alberta (IMPORT)782.1 MW

2015SP BASE CASE
SWINGBUS 1520 FOR FC-2009-5:2015-10-31:14:14--1--1-0-0
WED, JUL 27 2011 11:17

2015 NW FMM STUDY

Figure E-2015SP-22

Bus - VOLTAGE (kV/PU)
Branch - MW/Mvar
Equipment - MW/Mvar
100.0%RATEA
1.120OV 0.950UV
kV: <=34.500 <=69.000 <=138.000 <=240.000 <=500.000 >500.000

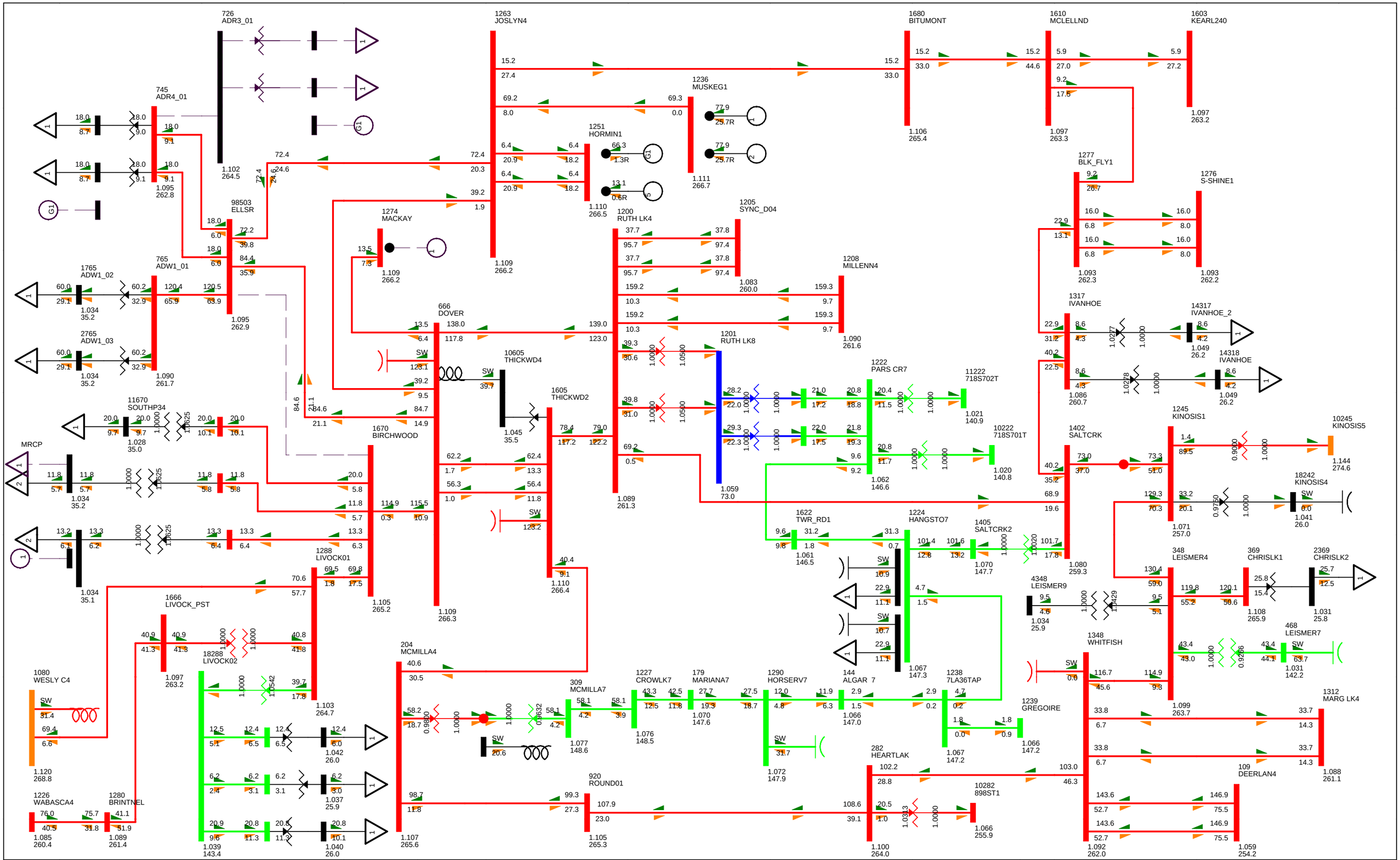

BC - Alberta (IMPORT)781.8 MW

2015SP BASE CASE
SWINGBUS 1520 FOR FC-2009-5:2015-10-31:14:14--1--1-0-0
WED, JUL 27 2011 11:17

2015 NW FMM STUDY

Figure E-2015SP-23

Bus - VOLTAGE (kV/PU)
Branch - MW/Mvar
Equipment - MW/Mvar
100.0%RATEA
1.120OV 0.950UV
kV: <=34.500 <=69.000 <=138.000 <=240.000 <=500.000 >500.000

Table E-6 Power Flow Analysis Summary- 2015 Winter Peak with NW FMM

Figure Number	Contingency	Thermal Violation	Voltage Violation
Figure E-2015WP_EX-1	Base Case (N - 0)	None	None
Figure E-2015WP_EX-2	Open 9L56 240kV line (WABASCA 720S to Brintnell 876S)	None	None
Figure E-2015WP_EX-3	Open 9L15 240kV line (Wesley Creek 834S to Livock 939S)	None	None
Figure E-2015WP_EX-4	Open 9L10 240kV line (Brintnell 876S to Livock 939S)	None	None
Figure E-2015WP_EX-5	Open 9L57 240kV line (Livock 939S to Birchwood Creek 960S)	None	None
Figure E-2015WP_EX-6	Open 9L74 240kV line (Birchwood Creek 960S to Dover 888S)	None	None
Figure E-2015WP_EX-7	Open 9L09 240kV line (Dover 888S to Joslyn Creek 849S)	None	None
Figure E-2015WP_EX-8	Open 9L08 240kV line (Ells River to to Dover 888S)	None	None
Figure E-2015WP_EX-9	Open 9L76 240kV line (Ells River to Joslyn Creek 849S)	None	None
Figure E-2015WP_EX-10	Open 9L32 240kV line (Joslyn Creek 849S to Bitumont 941S)	None	None
Figure E-2015WP_EX-11	Open 9L01 240kV line (Dover 888S to Ruth Lake 848S)	None	None
Figure E-2015WP_EX-12	Open 9L23 240kV line (Ruth Lake 848S to Salt Creek 977S)	None	None
Figure E-2015WP_EX-13	Open 9L990 240kV line (Salt Creek 977S to Kinosis 856S)	None	None
Figure E-2015WP_EX-14	Open 9L990 240kV line (Kinosis 856S to Leismer 72S)	None	None
Figure E-2015WP_EX-15	Open 9L930 240kV line (Leismer 72S to Whitefish Lake 825S)	None	None
Figure E-2015WP_EX-16	Open 9L22 240kV line (Whitefish Lake 825S to Heart Lake 898S)	None	None
Figure E-2015WP_EX-17	Open 9L47 240kV line (Heart Lake 898S to RoundHill POD)	None	None
Figure E-2015WP_EX-18	Open 9L55 240kV line (RoundHill POD to McMillan 885S)	None	None
Figure E-2015WP_EX-19	Open 9L07 240kV line (McMillan 885S TO Dover 888S)	None	None

Figure E-2015WP_EX-20	Open 9L58 240kV line (Ruth Lake 848S to Thickwood 951S)	None	None
Figure E-2015WP_EX-21	Open 9L68 240kV line (Thickwood 951S TO Dover 888S)	None	None
Figure E-2015WP_EX-22	Open 9L30 240kV line (McMillan 885S TO Dover 888S)	None	None
Figure E-2015WP_EX-23	Open 9L95 240kV line (Ells River 2079S TO Birchwood 960S)	None	None

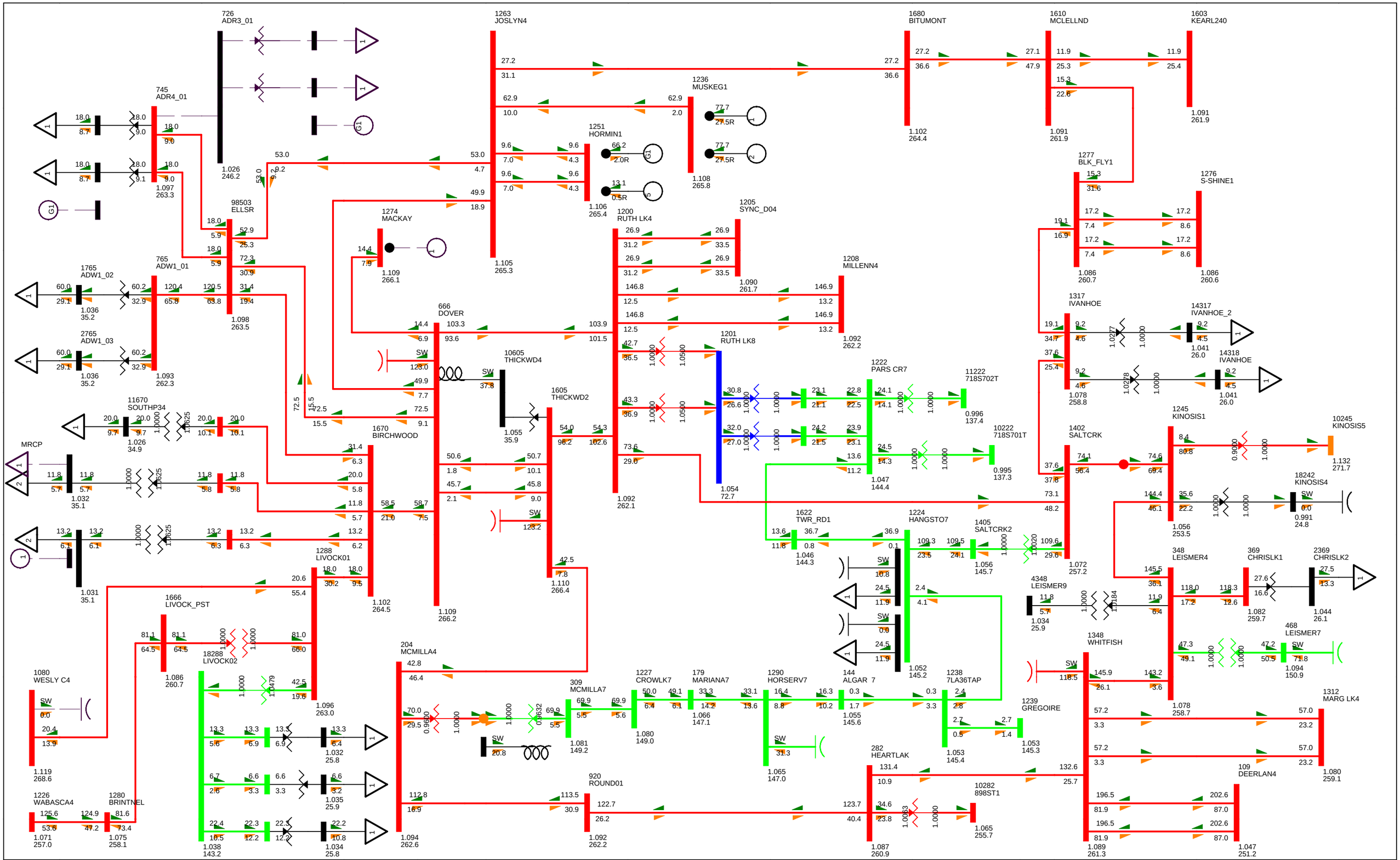

BC - Alberta (IMPORT)774.0 MW

2015WP BASE CASE
SWINGBUS 1520 FOR FC-2009-5:2016-04-30:19:24--1--1-0-0
WED, JUL 27 2011 11:19

2015 NW FMM STUDY

Figure E-2015WP-1

Bus - VOLTAGE (kV/PU)
Branch - MW/Mvar
Equipment - MW/Mvar
100.0%RATEA
1.120OV 0.950UV
kV: <=34.500 <=69.000 <=138.000 <=240.000 <=500.000 >500.000

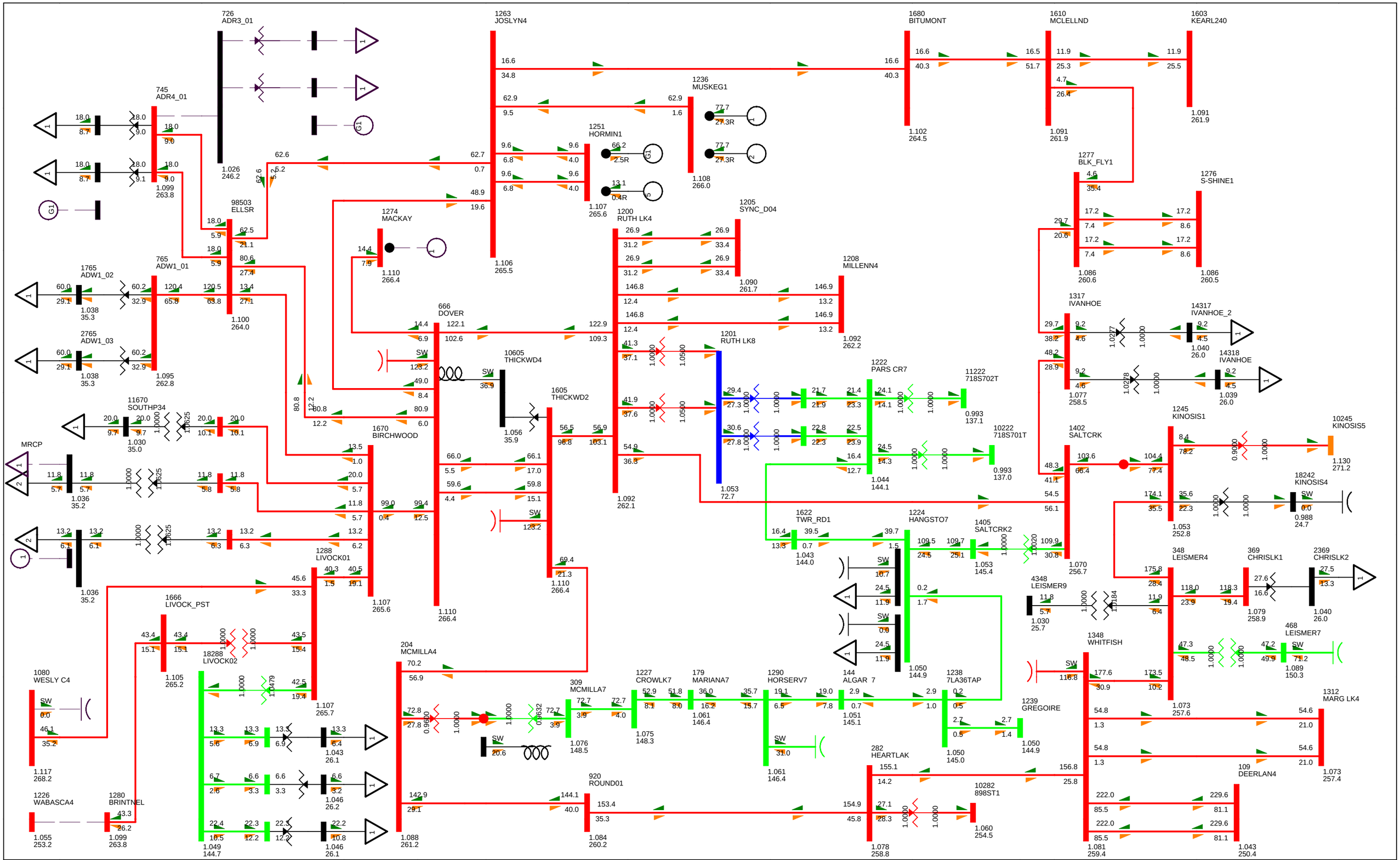

BC - Alberta (IMPORT)787.5 MW

2015WP BASE CASE
SWINGBUS 1520 FOR FC-2009-5:2016-04-30:19:24--1--1-0-0
WED, JUL 27 2011 11:19

2015 NW FMM STUDY

Figure E-2015WP-2

Bus - VOLTAGE (kV/PU)
Branch - MW/Mvar
Equipment - MW/Mvar
100.0%RATEA
1.120OV 0.950UV
kV: <=34.500 <=69.000 <=138.000 <=240.000 <=500.000 >500.000

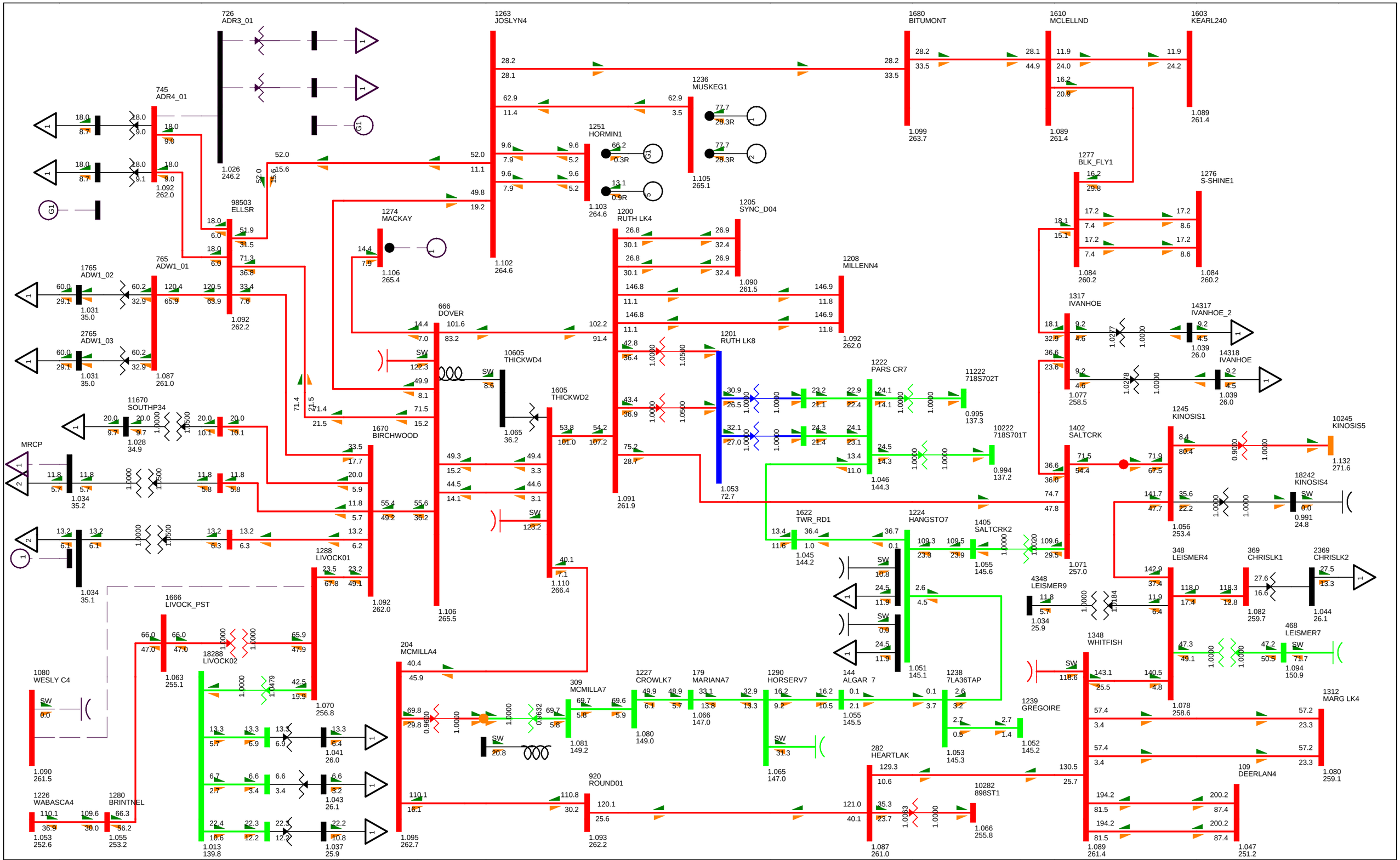
726
ADR3_01
1263
JOSLYN4
1680
BITUMONT
1610
MCLELLND
1603
KEARL240
745
ADR4_01
1236
MUSKEG1
1251
HORMIN1
1277
BLK_FLY1
1276
S-SHINE1
98503
ELLSR
1274
MACKAY
1205
SYNC_D04
1200
RUTH LK4
765
ADW1_01
1765
ADW1_02
2765
ADW1_03
666
DOVER
1208
MILLENN4
1201
RUTH LK8
1222
PARS CR7
11222
718S702T
10222
718S701T
1317
IVANHOE
14317
IVANHOE_2
14318
IVANHOE
11670
SOUTHP34
MRCP
1670
BIRCHWOOD
10605
THICKWD4
1605
THICKWD2
1245
KINOSIS1
10245
KINOSIS5
1402
SALTCRK
18242
KINOSIS4
1288
LIVOCK01
1666
LIVOCK_PST
18288
LIVOCK02
204
MCMILLA4
309
MCMILLA7
1227
CROWLK7
179
MARIANA7
1290
HORSERV7
144
ALGAR 7
1238
7LA36TAP
1239
GREGOIRE
1622
TWR_RD1
1224
HANGSTO7
1405
SALTCRK2
4348
LEISMER9
348
LEISMER4
369
CHRISLK1
2369
CHRISLK2
468
LEISMER7
1348
WHITFISH
1312
MARG LK4
109
DEERLAN4
1080
WESLY C4
1226
WABASCA4
1280
BRINTNEL
920
ROUND01
282
HEARTLAK
10282
898ST1
1066
255.8
1080
WESLY C4
1090
261.5
1053
252.6
1055
253.2
1013
139.8
1041
26.0
1043
26.1
1037
25.9
1095
262.7
1093
262.2
1087
261.0
1053
145.3
1052
145.2
1065
147.0
1080
149.0
1081
149.2
1066
147.0
1055
145.5
1051
145.1
1045
144.2
1046
144.3
1053
72.7
1091
261.9
1106
265.5
1110
266.4
1092
262.0
1070
256.8
1063
255.1
1034
35.2
1028
34.9
1034
35.1
1031
35.0
1092
262.2
1087
261.0
1031
35.0
1106
265.4
1102
264.6
1103
264.6
1105
265.1
1099
263.7
1089
261.4
1089
261.4
1084
260.2
1084
260.2
1077
258.5
1039
26.0
1039
26.0
1056
253.4
1132
271.6
1034
25.9
1082
259.7
1044
26.1
1094
150.9
1078
258.6
1080
259.1
1047
251.2
1089
261.4
1071
257.0
1055
145.6
1044
26.1
1052
145.2
1053
145.3
1055
145.5
1066
147.0
1080
149.0
1081
149.2
1065
147.0
1087
261.0
1093
262.2
1095
262.7
1106
265.5
1092
262.0
1110
266.4
1091
261.9
1053
72.7
1046
144.3
1045
144.2
1051
145.1
1053
145.3
1052
145.2
1066
255.8
1080
259.1
1047
251.2
1089
261.4
1078
258.6
1094
150.9
1082
259.7
1044
26.1
1034
25.9
1071
257.0
1055
145.6
1056
253.4
1132
271.6
1039
26.0
1039
26.0
1077
258.5
1084
260.2
1084
260.2
1089
261.4
1099
263.7
1105
265.1
1103
264.6
1102
264.6
1106
265.4
1092
262.2
1087
261.0
1031
35.0
1092
262.0
1034
35.1
1028
34.9
1034
35.2
1092
262.0
1063
255.1
1070
256.8
1041
26.0
1043
26.1
1037
25.9
1013
139.8
1053
252.6
1055
253.2
1090
261.5
1080
259.1
1066
255.8

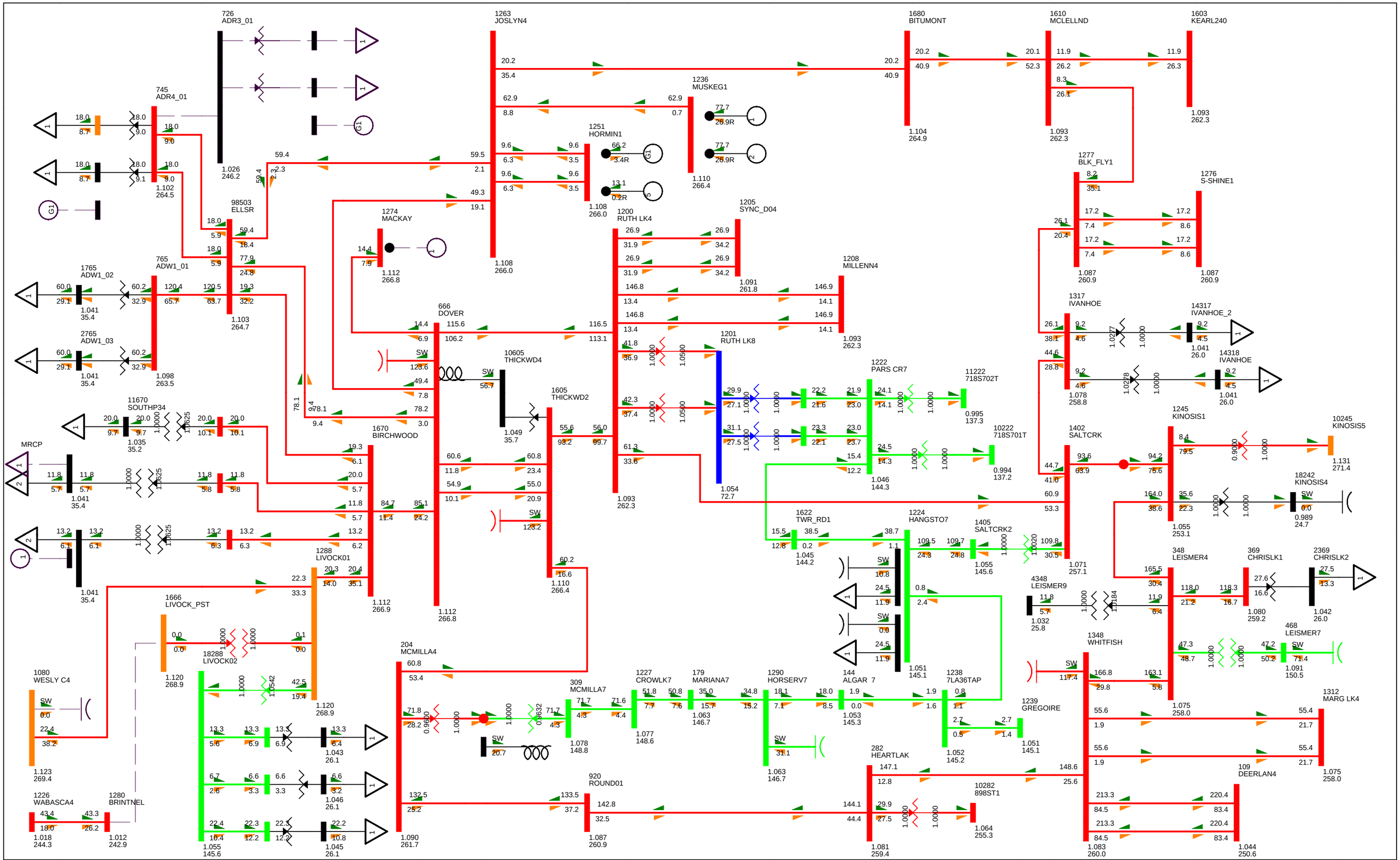
726
ADR3_01
1263
JOSLYN4
1680
BITUMONT
1610
MCLELLND
1603
KEARL240
745
ADR4_01
1236
MUSKEG1
1251
HORMIN1
1277
BLK_FLY1
1276
S-SHINE1
98503
ELLSR
1274
MACKAY
1200
RUTH LK4
1205
SYNC_D04
1765
ADW1_02
765
ADW1_01
1208
MILLENN4
1317
IVANHOE
14317
IVANHOE_2
14318
IVANHOE
2765
ADW1_03
666
DOVER
1201
RUTH LK8
1222
PARS CR7
11222
718S702T
10222
718S701T
11670
SOUTHP34
1605
THICKWD2
10605
THICKWD4
1670
BIRCHWOOD
1402
SALTCRK
1245
KINOSIS1
10245
KINOSIS5
18242
KINOSIS4
MRCP
1288
LIVOCK01
1622
TWR_RD1
1224
HANGSTO7
1405
SALTCRK2
4348
LEISMER9
348
LEISMER4
369
CHRISLK1
2369
CHRISLK2
468
LEISMER7
1666
LIVOCK_PST
18288
LIVOCK02
1080
WESLY C4
204
MCMILLA4
309
MCMILLA7
1227
CROWLK7
179
MARIANA7
1290
HORSERV7
144
ALGAR 7
1238
7LA36TAP
1239
GREGOIRE
1348
WHITFISH
1312
MARG LK4
109
DEERLAN4
1226
WABASCA4
1280
BRINTNEL
920
ROUND01
282
HEARTLAK
10282
898ST1
1064
255.3
1123
269.4
1018
244.3
1012
242.9
1055
145.6
1090
261.7
1112
266.8
1112
266.9
1110
266.4
1108
266.0
1120
268.9
1078
148.8
1077
148.6
1063
146.7
1053
145.3
1051
145.1
1052
145.2
1054
72.7
1093
262.3
1091
261.8
1087
260.9
1081
259.4
1083
260.0
1044
250.6
1075
258.0
1071
257.1
1055
253.1
1045
144.2
1046
144.3
1043
26.1
1046
26.1
1045
26.1
1041
35.4
1041
35.4
1041
35.4
1041
35.4
1035
35.2
1026
246.2
1102
264.5
1103
264.7
1098
263.5
1078
258.8
1080
259.2
1042
26.0
1041
26.0
1032
25.8
1055
145.6
1045
144.2
1049
35.7
1063
146.7
1064
255.3
1081
259.4
1083
260.0
1044
250.6
1075
258.0
1055
253.1
1042
26.0
1041
26.0
0.995
137.3
0.994
137.2
0.989
24.7
1.131
271.4
1.091
150.5
1.046
144.3
1.054
72.7
1.093
262.3
1.091
261.8
1.087
260.9
1.087
260.9
1.093
262.3
1.093
262.3
1.104
264.9
1.110
266.4
1.108
266.0
1.112
266.8
1.112
266.9
1.110
266.4
1.108
266.0
1.120
268.9
1.078
148.8
1.077
148.6
1.063
146.7
1.053
145.3
1.051
145.1
1.052
145.2
1.054
72.7
1.093
262.3
1.091
261.8
1.087
260.9
1.081
259.4
1.083
260.0
1.044
250.6
1.075
258.0
1.071
257.1
1.055
253.1
1.045
144.2
1.046
144.3
1.043
26.1
1.046
26.1
1.045
26.1
1.041
35.4
1.041
35.4
1.041
35.4
1.041
35.4
1.035
35.2
1.026
246.2
1.102
264.5
1.103
264.7
1.098
263.5
1.078
258.8
1.080
259.2
1.042
26.0
1.041
26.0
1.032
25.8
1.055
145.6
1.045
144.2
1.049
35.7
1.063
146.7
1.064
255.3

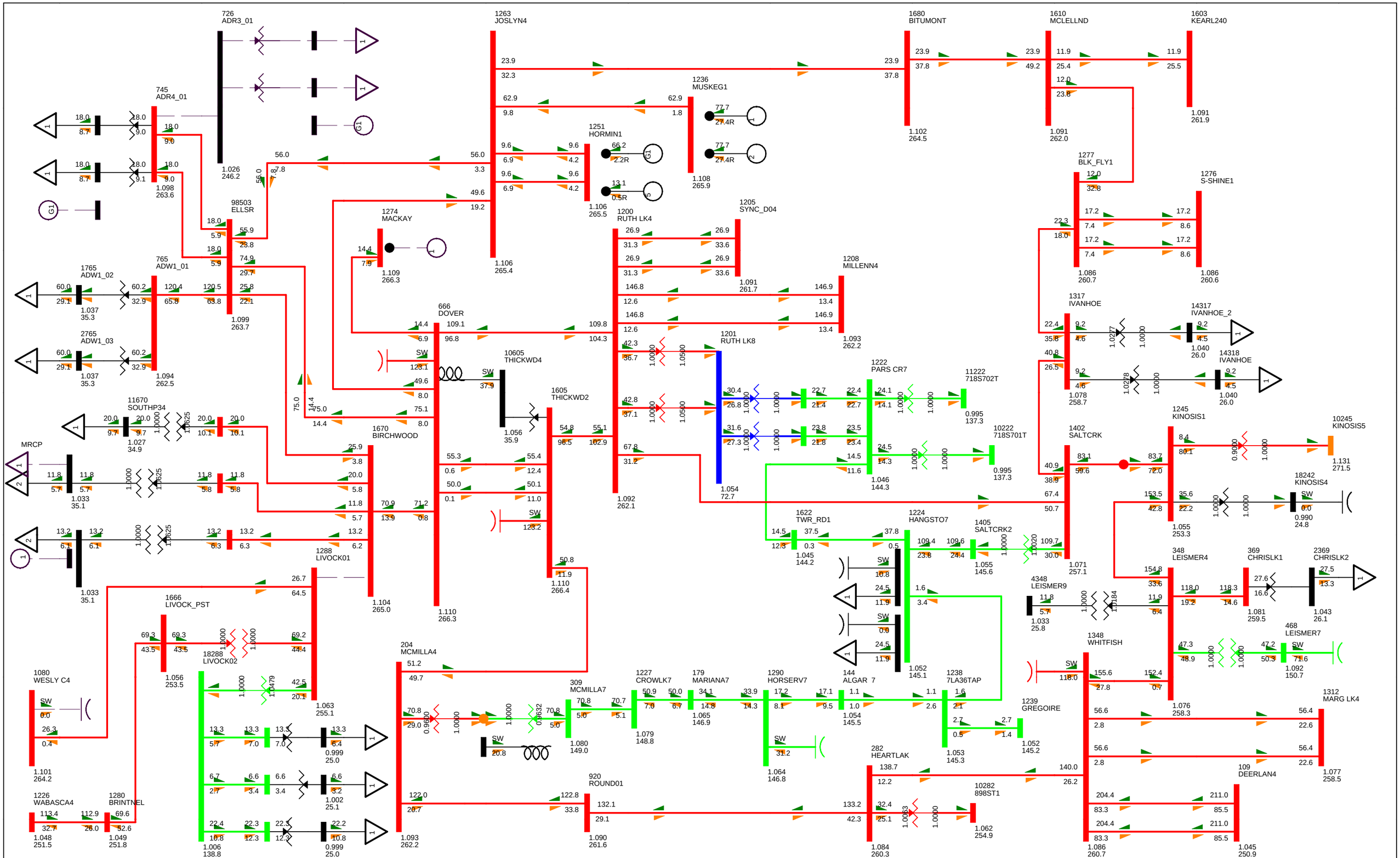

BC - Alberta (IMPORT)775.3 MW

2015WP BASE CASE
SWINGBUS 1520 FOR FC-2009-5:2016-04-30:19:24--1--1-0-0
WED, JUL 27 2011 11:19

2015 NW FMM STUDY

Figure E-2015WP-5

Bus - VOLTAGE (kV/PU)
Branch - MW/Mvar
Equipment - MW/Mvar
100.0%RATEA
1.120OV 0.950UV
kV: <=34.500 <=69.000 <=138.000 <=240.000 <=500.000 >500.000

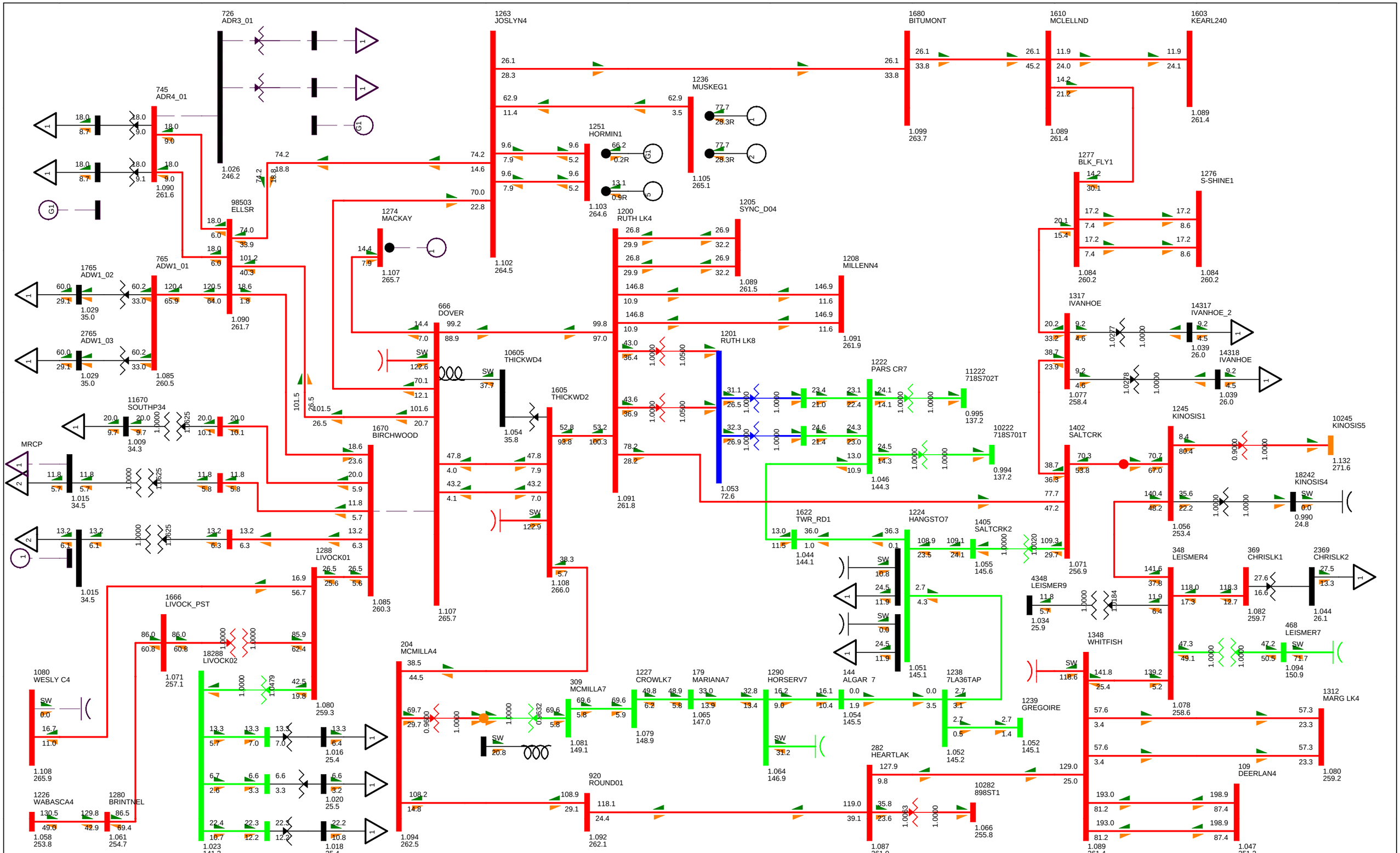

BC - Alberta (IMPORT)775.7 MW

2015WP BASE CASE
SWINGBUS 1520 FOR FC-2009-5:2016-04-30:19:24--1--1-0-0
WED, JUL 27 2011 11:19

2015 NW FMM STUDY

Figure E-2015WP-6

Bus - VOLTAGE (kV/PU)
Branch - MW/Mvar
Equipment - MW/Mvar
100.0%RATEA
1.120OV 0.950UV
kV: <=34.500 <=69.000 <=138.000 <=240.000 <=500.000 >500.000

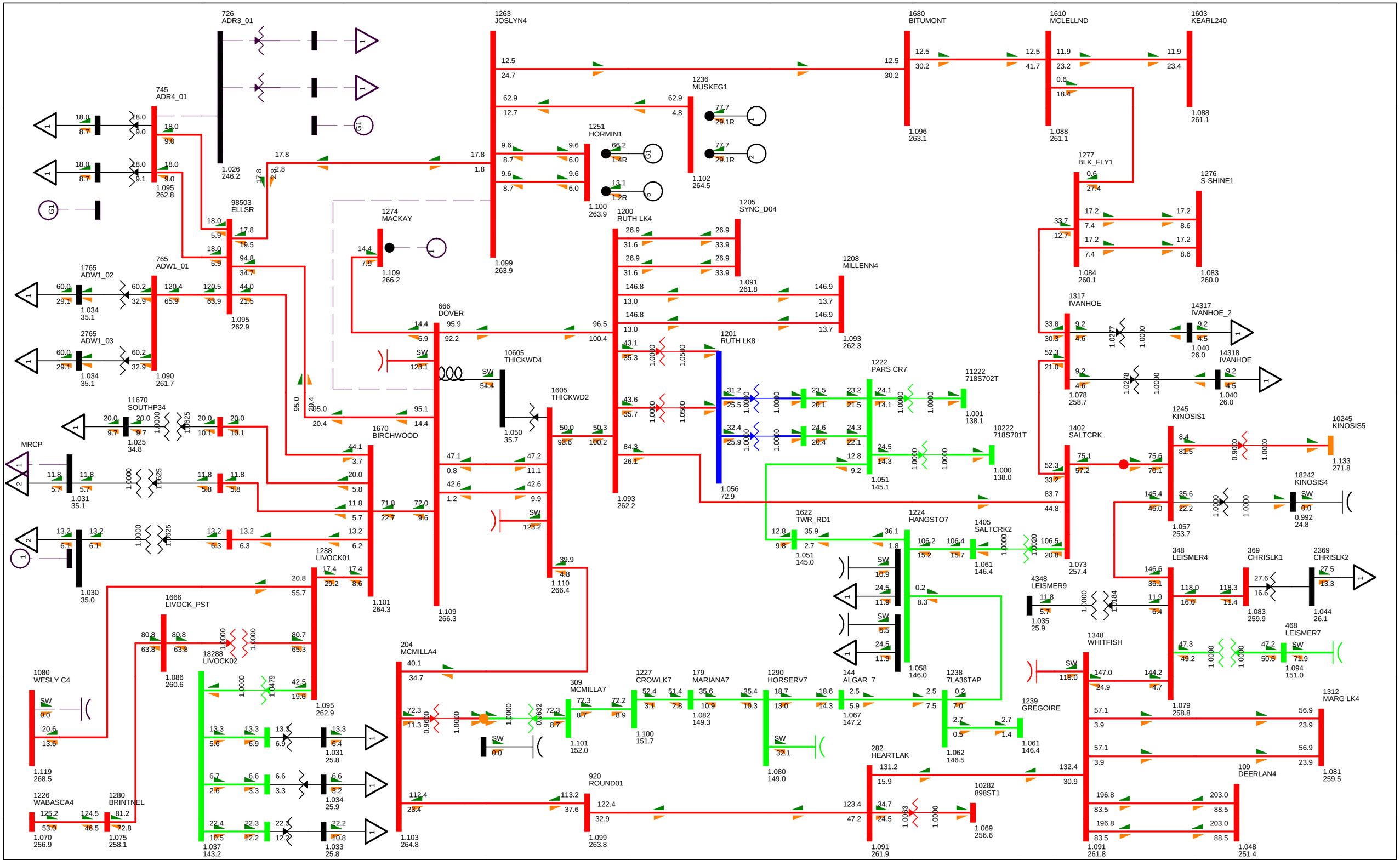

BC - Alberta (IMPORT)774.0 MW

2015WP BASE CASE
SWINGBUS 1520 FOR FC-2009-5:2016-04-30:19:24--1--1-0-0
WED, JUL 27 2011 11:19

2015 NW FMM STUDY

Figure E-2015WP-7

Bus - VOLTAGE (kV/PU)
Branch - MW/Mvar
Equipment - MW/Mvar
100.0%RATEA
1.120OV 0.950UV
kV: <=34.500 <=69.000 <=138.000 <=240.000 <=500.000 >500.000

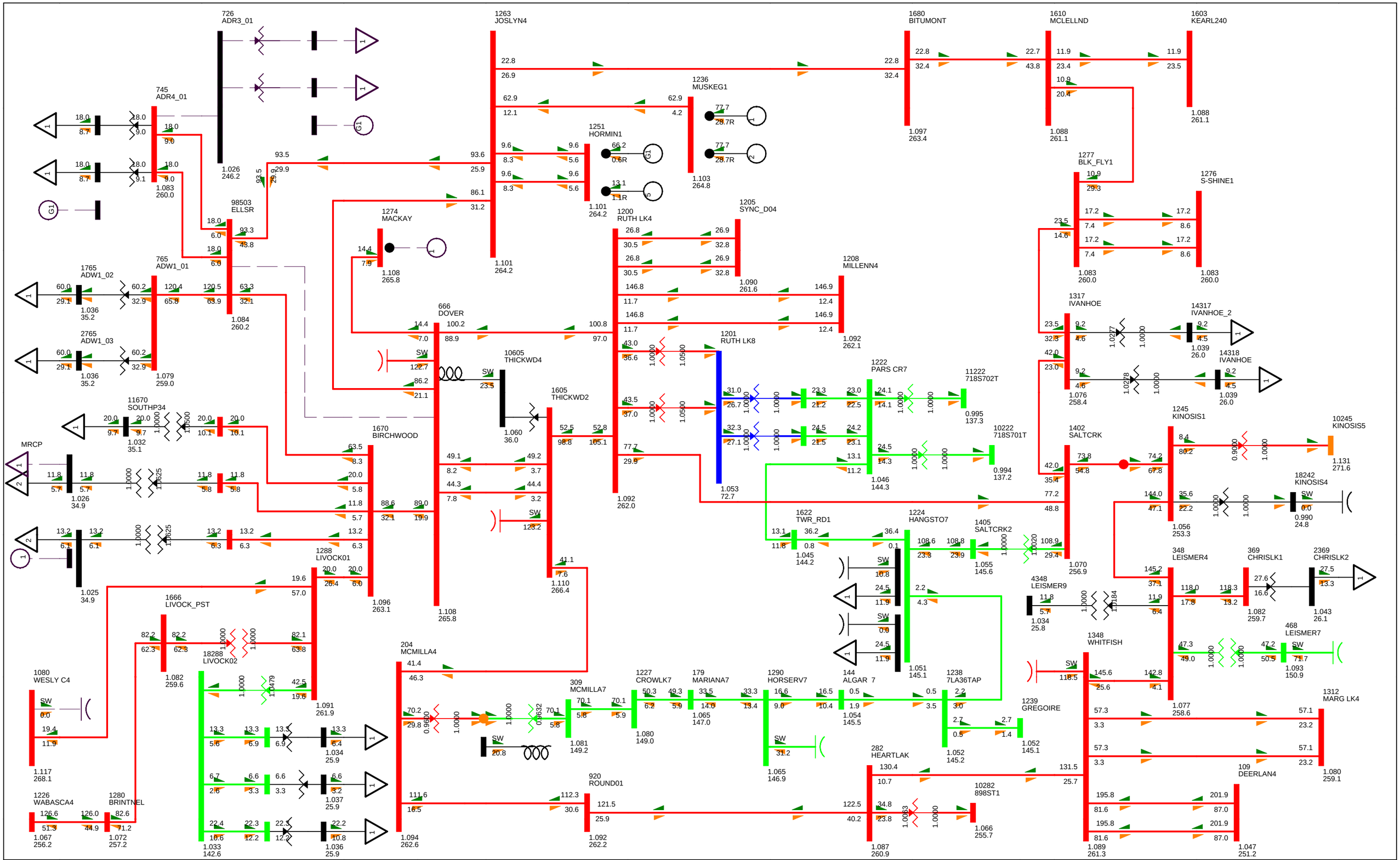

BC - Alberta (IMPORT)774.8 MW

2015WP BASE CASE
SWINGBUS 1520 FOR FC-2009-5:2016-04-30:19:24--1--1-0-0
WED, JUL 27 2011 11:20

2015 NW FMM STUDY

Figure E-2015WP-8

Bus - VOLTAGE (kV/PU)
Branch - MW/Mvar
Equipment - MW/Mvar
100.0%RATEA
1.120OV 0.950UV
kV: <=34.500 <=69.000 <=138.000 <=240.000 <=500.000 >500.000

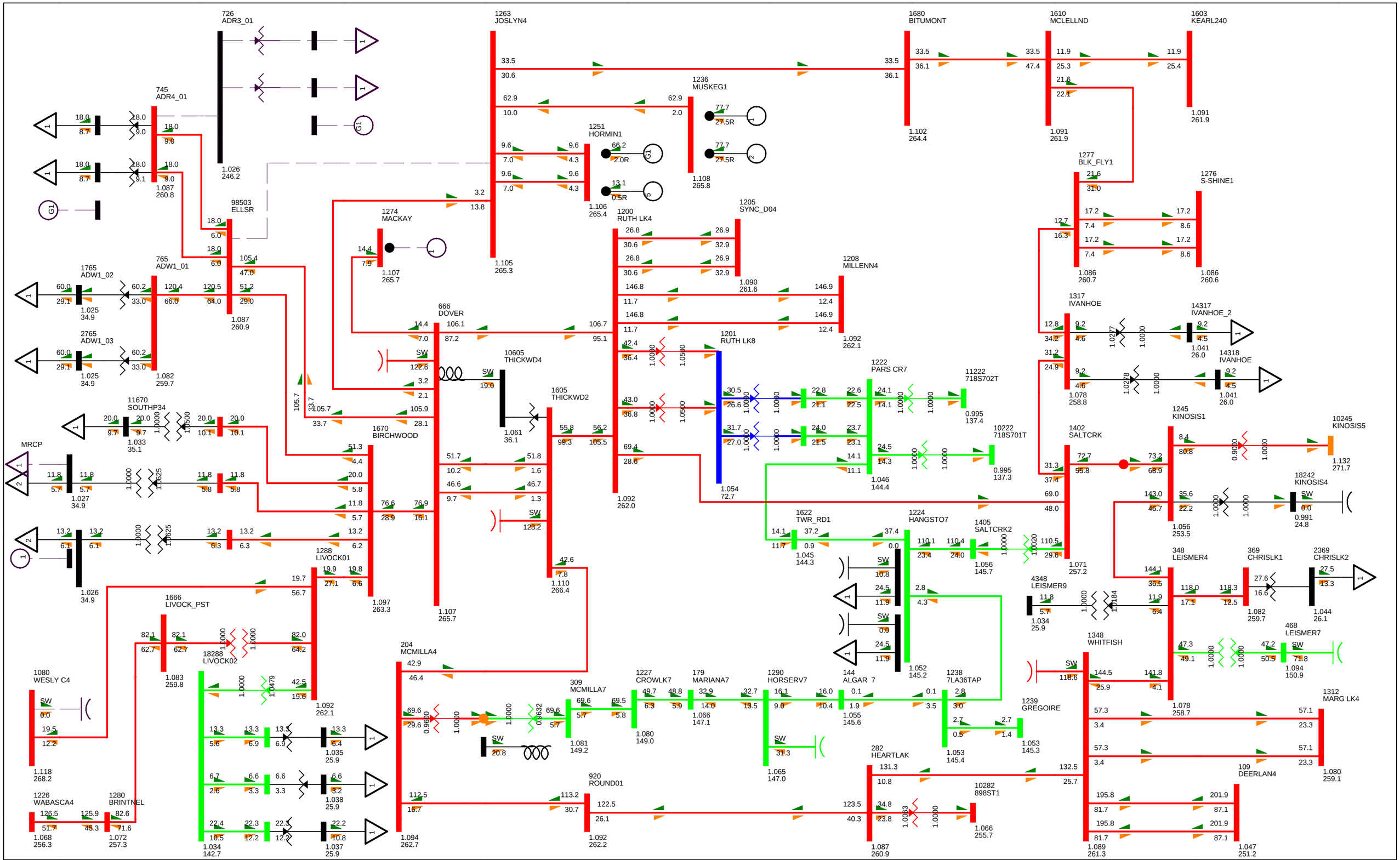

BC - Alberta (IMPORT)774.5 MW

2015WP BASE CASE
SWINGBUS 1520 FOR FC-2009-5:2016-04-30:19:24--1--1-0-0
WED, JUL 27 2011 11:20

2015 NW FMM STUDY

Figure E-2015WP-9

Bus - VOLTAGE (kV/PU)
Branch - MW/Mvar
Equipment - MW/Mvar
100.0%RATEA
1.120OV 0.950UV
kV: <=34.500 <=69.000 <=138.000 <=240.000 <=500.000 >500.000

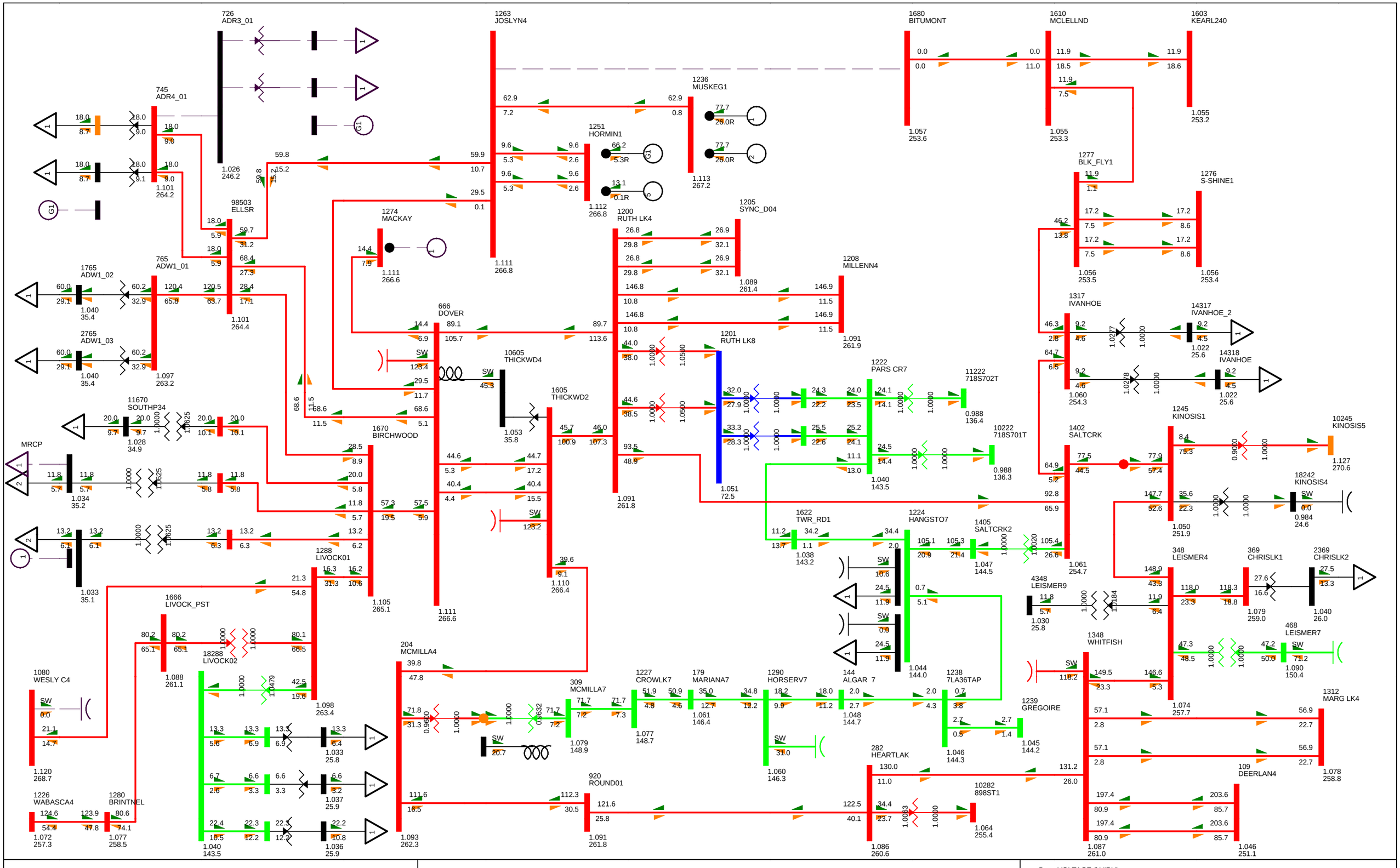

BC - Alberta (IMPORT)774.5 MW

2015WP BASE CASE
SWINGBUS 1520 FOR FC-2009-5:2016-04-30:19:24--1--1-0-0
WED, JUL 27 2011 11:20

2015 NW FMM STUDY

Figure E-2015WP-10

Bus - VOLTAGE (kV/PU)
Branch - MW/Mvar
Equipment - MW/Mvar
100.0%RATEA
1.120OV 0.950UV
kV: <=34.500 <=69.000 <=138.000 <=240.000 <=500.000 >500.000

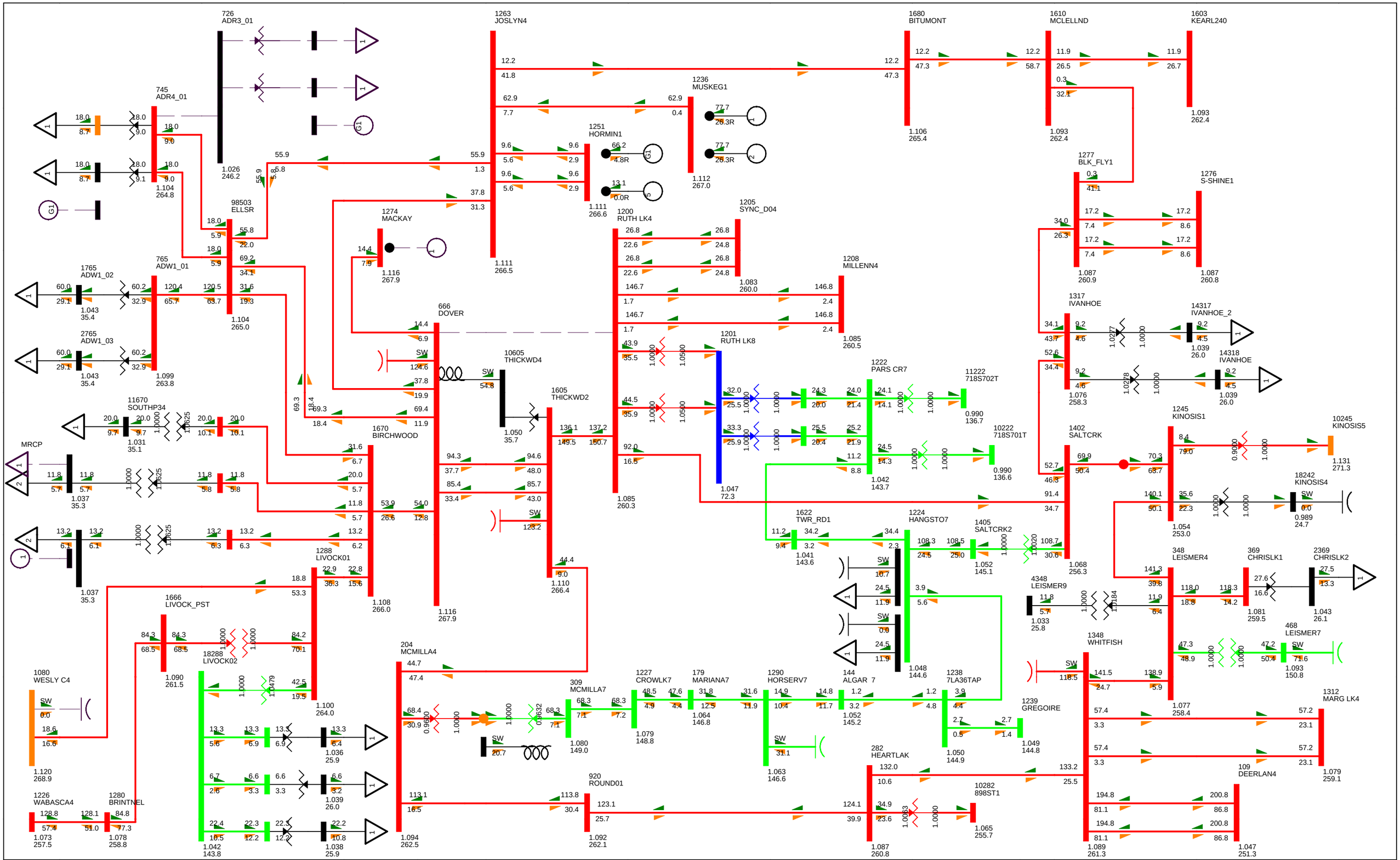

BC - Alberta (IMPORT)775.5 MW

2015WP BASE CASE
SWINGBUS 1520 FOR FC-2009-5:2016-04-30:19:24--1--1-0-0
WED, JUL 27 2011 11:20

2015 NW FMM STUDY

Figure E-2015WP-11

Bus - VOLTAGE (kV/PU)
Branch - MW/Mvar
Equipment - MW/Mvar

100.0%RATEA
1.120OV 0.950UV
kV: <=34.500 <=69.000 <=138.000 <=240.000 <=500.000 >500.000

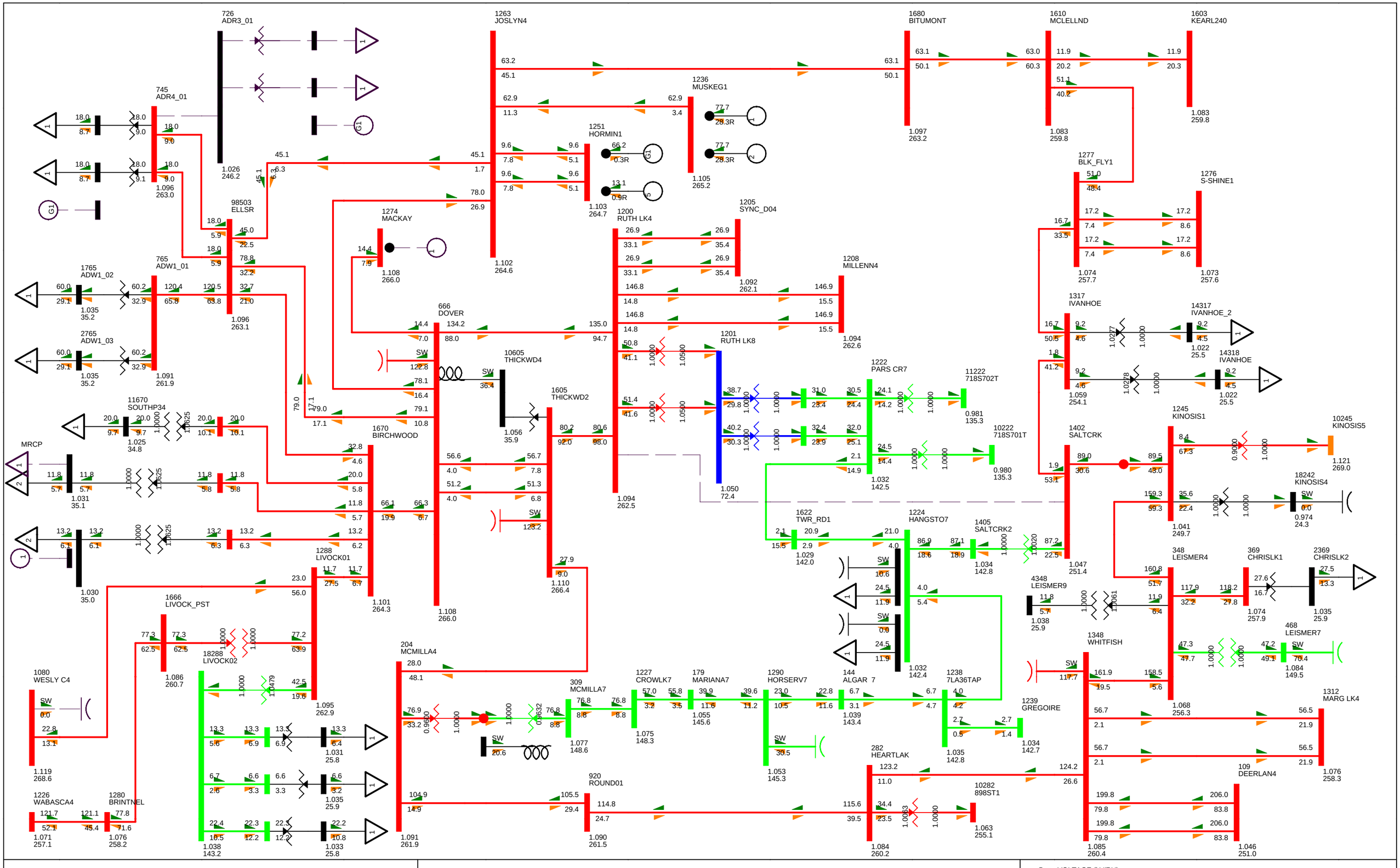

BC - Alberta (IMPORT)775.0 MW

2015WP BASE CASE
SWINGBUS 1520 FOR FC-2009-5:2016-04-30:19:24--1--1-0-0
WED, JUL 27 2011 11:20

2015 NW FMM STUDY

Figure E-2015WP-12

Bus - VOLTAGE (kV/PU)
Branch - MW/Mvar
Equipment - MW/Mvar

100.0%RATEA
1.120OV 0.950UV
kV: <=34.500 <=69.000 <=138.000 <=240.000 <=500.000 >500.000

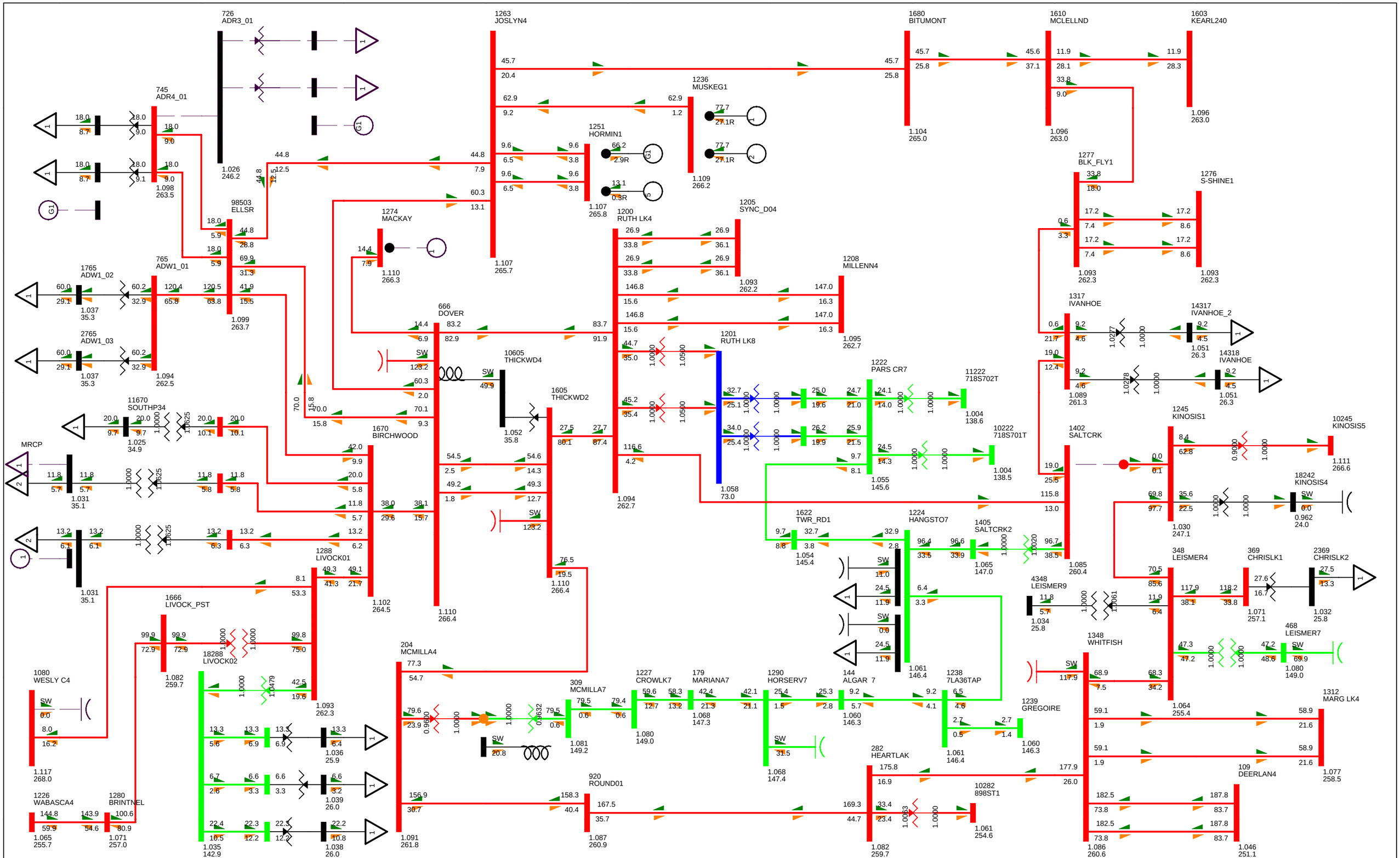

BC - Alberta (IMPORT)780.1 MW

2015WP BASE CASE
SWINGBUS 1520 FOR FC-2009-5:2016-04-30:19:24--1--1-0-0
WED, JUL 27 2011 11:20

2015 NW FMM STUDY

Figure E-2015WP-13

Bus - VOLTAGE (kV/PU)
Branch - MW/Mvar
Equipment - MW/Mvar
100.0%RATEA
1.120OV 0.950UV
kV: <=34.500 <=69.000 <=138.000 <=240.000 <=500.000 >500.000

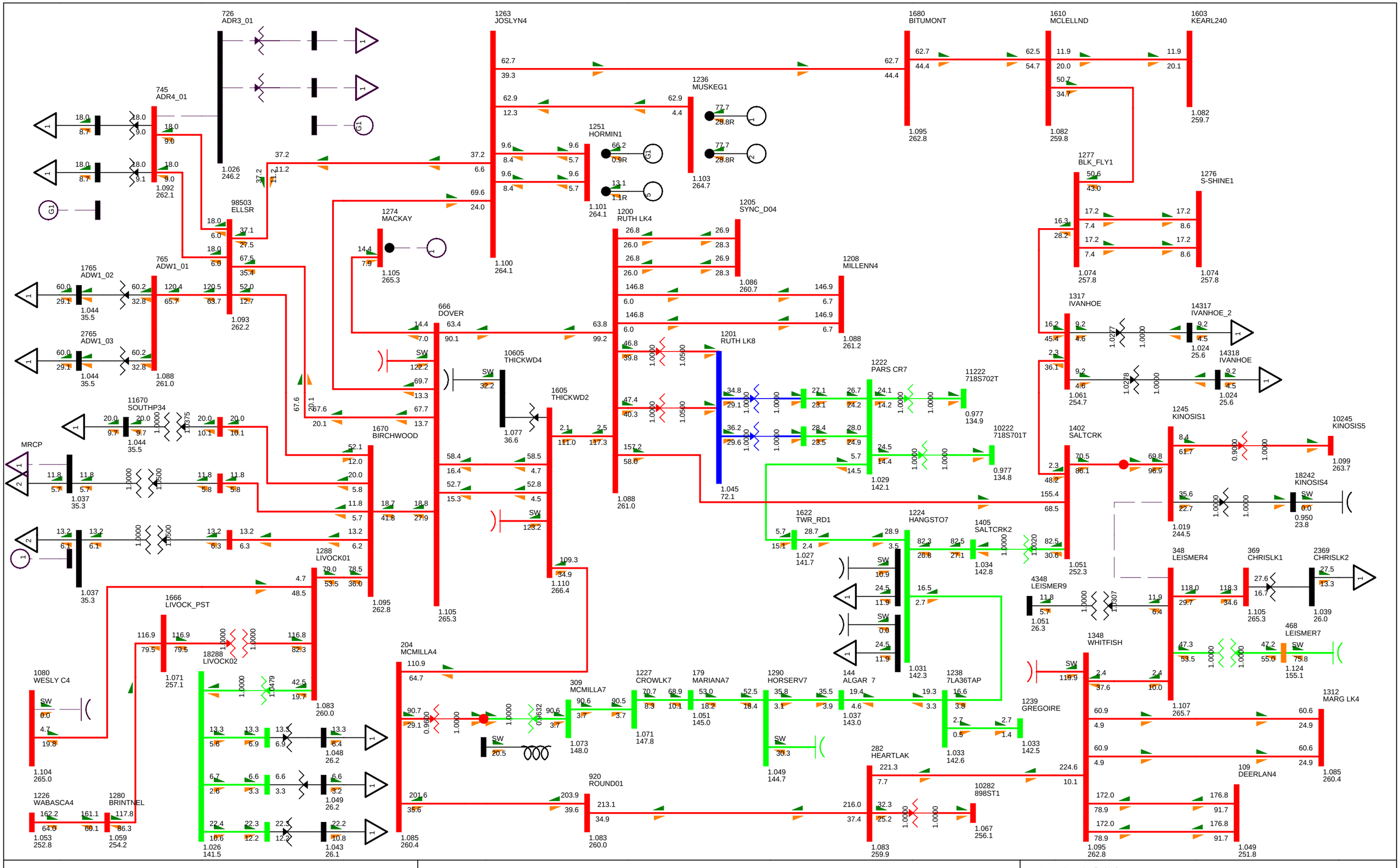
726
ADR3_01
1263
JOSLYN4
1680
BITUMONT
1610
MCLELLND
1603
KEARL240
745
ADR4_01
1236
MUSKEG1
1251
HORMIN1
1277
BLK_FLY1
1276
S-SHINE1
98503
ELLSR
1274
MACKAY
1200
RUTH LK4
1205
SYNC_D04
765
ADW1_01
1765
ADW1_02
2765
ADW1_03
666
DOVER
1208
MILLENN4
1201
RUTH LK8
1222
PARS CR7
11222
718S702T
10222
718S701T
1317
IVANHOE
14317
IVANHOE_2
14318
IVANHOE
11670
SOUTHP34
MRCP
1670
BIRCHWOOD
10605
THICKWD4
1605
THICKWD2
1245
KINOSIS1
10245
KINOSIS5
1402
SALTCRK
18242
KINOSIS4
1288
LIVOCK01
1666
LIVOCK_PST
18288
LIVOCK02
204
MCMILLA4
309
MCMILLA7
1227
CROWLK7
179
MARIANA7
1290
HORSERV7
144
ALGAR 7
1238
7LA36TAP
1622
TWR_RD1
1224
HANGSTO7
1405
SALTCRK2
348
LEISMER4
369
CHRISLK1
2369
CHRISLK2
4348
LEISMER9
468
LEISMER7
1348
WHITFISH
1239
GREGOIRE
1312
MARG LK4
1080
WESLY C4
1226
WABASCA4
1280
BRINTNEL
920
ROUND01
282
HEARTLAK
10282
898ST1
109
DEERLAN4
1085
260.4
1088
261.0
1105
265.3
1095
262.8
1100
264.1
1103
264.7
1101
264.1
1092
262.1
1026
246.2
1093
262.2
1044
35.5
1088
261.0
1105
265.3
1110
266.4
1077
36.6
1045
72.1
1029
142.1
1027
141.7
1034
142.8
1051
252.3
1051
26.3
1124
155.1
1107
265.7
1039
26.0
1105
265.3
1099
263.7
1082
259.8
1082
259.7
1074
257.8
1074
257.8
1061
254.7
1024
25.6
1024
25.6
1019
244.5
0.950
23.8
0.977
134.9
0.977
134.8
1.051
142.3
1.033
142.5
1.033
142.6
1.049
144.7
1.037
143.0
1.051
145.0
1.071
147.8
1.073
148.0
1.083
260.0
1.085
260.4
1.049
251.8
1.095
262.8
1.083
259.9
1.067
256.1
1.037
35.3
1.053
252.8
1.059
254.2
1.104
265.0
1.071
257.1
1.083
260.0
1.048
26.2
1.049
26.2
1.043
26.1
1.026
141.5
1.110
266.4
1.088
260.0
1.027
141.7
1.034
142.8
1.051
26.3
1.124
155.1
1.107
265.7
1.039
26.0
1.105
265.3
1.099
263.7
1.082
259.8
1.082
259.7
1.074
257.8
1.074
257.8
1.061
254.7
1.024
25.6
1.024
25.6
1.019
244.5
0.950
23.8
0.977
134.9
0.977
134.8
1.051
142.3
1.033
142.5
1.033
142.6
1.049
144.7
1.037
143.0
1.051
145.0
1.071
147.8
1.073
148.0
1.083
260.0
1.085
260.4
1.049
251.8
1.095
262.8
1.083
259.9
1.067
256.1
1.037
35.3
1.053
252.8
1.059
254.2
1.104
265.0
1.071
257.1
1.083
260.0
1.048
26.2
1.049
26.2
1.043
26.1
1.026
141.5
1.110
266.4
1.088
260.0
1.027
141.7
1.034
142.8
1.051
252.3
1.051
26.3
1.124
155.1
1.107
265.7
1.039
26.0
1.105
265.3
1.099
263.7
1.082
259.8
1.082
259.7
1.074
257.8
1.074
257.8
1.061
254.7
1.024
25.6
1.024
25.6
1.019
244.5
0.950
23.8
0.977
134.9
0.977
134.8
1.051
142.3
1.033
142.5
1.033
142.6
1.049
144.7
1.037
143.0
1.051
145.0
1.071
147.8
1.073
148.0
1.083
260.0
1.085
260.4
1.049
251.8
1.095
262.8
1.083
259.9
1.067
256.1
1.037
35.3
1.053
252.8
1.059
254.2
1.104
265.0
1.071
257.1
1.083
260.0
1.048
26.2
1.049
26.2
1.043
26.1
1.026
141.5
1.110
266.4
1.088
260.0
1.027
141.7
1.034
142.8

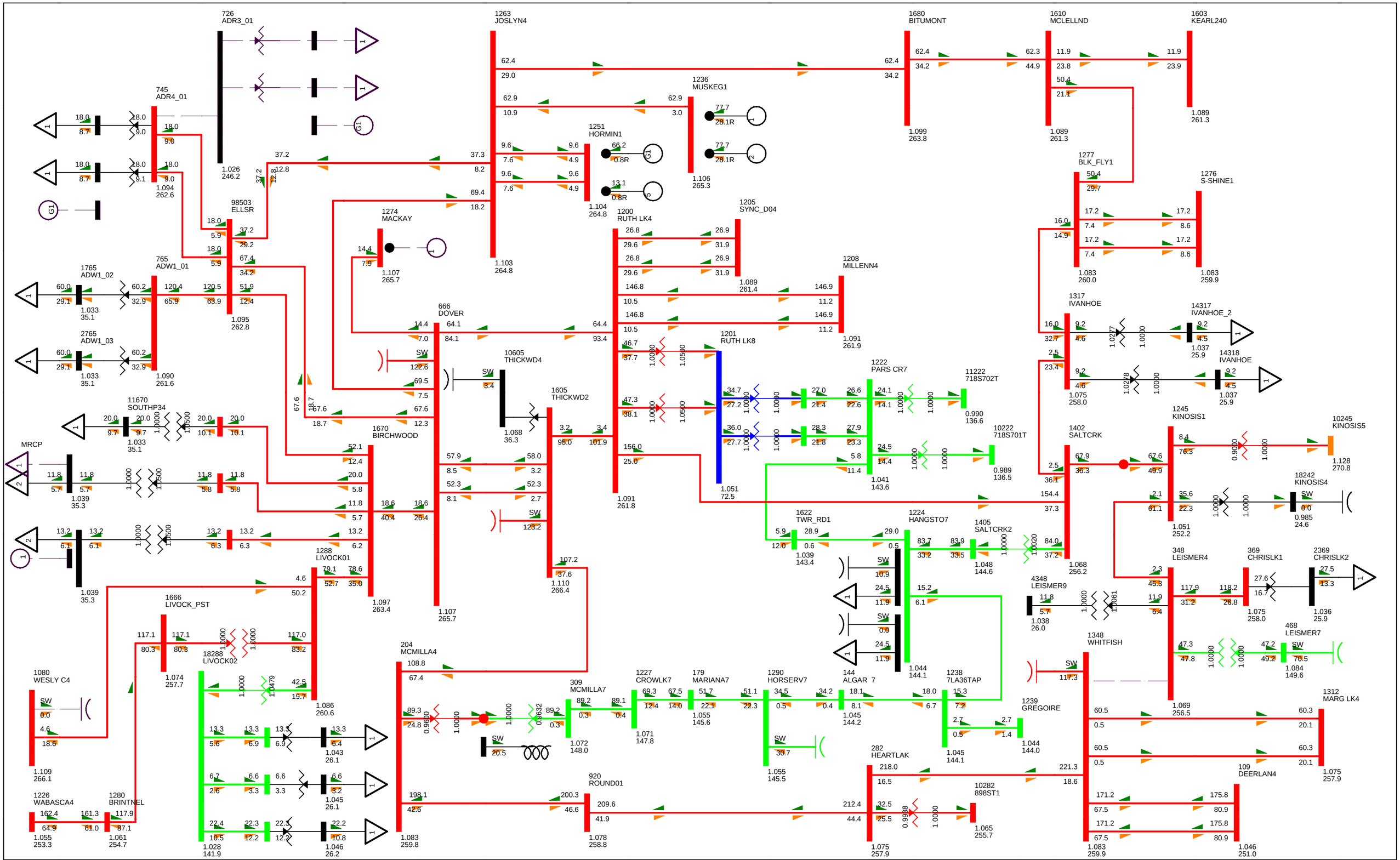
726
ADR3_01
1263
JOSLYN4
1680
BITUMONT
1610
MCLELLND
1603
KEARL240
745
ADR4_01
1236
MUSKEG1
1251
HORMIN1
1277
BLK_FLY1
1276
S-SHINE1
98503
ELLSR
1274
MACKAY
1200
RUTH LK4
1205
SYNC_D04
765
ADW1_01
1765
ADW1_02
2765
ADW1_03
666
DOVER
1208
MILLENN4
1201
RUTH LK8
1222
PARS CR7
11222
718S702T
10222
718S701T
1317
IVANHOE
14317
IVANHOE_2
14318
IVANHOE
11670
SOUTHP34
MRCP
1670
BIRCHWOOD
10605
THICKWD4
1605
THICKWD2
1245
KINOSIS1
10245
KINOSIS5
1402
SALTCRK
18242
KINOSIS4
1288
LIVOCK01
1666
LIVOCK_PST
18288
LIVOCK02
204
MCMILLA4
1622
TWR_RD1
1224
HANGSTO7
1405
SALTCRK2
4348
LEISMER9
348
LEISMER4
369
CHRISLK1
2369
CHRISLK2
468
LEISMER7
1348
WHITFISH
1312
MARG LK4
1080
WESLY C4
1226
WABASCA4
1280
BRINTNEL
309
MCMILLA7
1227
CROWLK7
179
MARIANA7
1290
HORSERV7
144
ALGAR 7
1238
7LA36TAP
1239
GREGOIRE
282
HEARTLAK
920
ROUND01
10282
898ST1
109
DEERLAN4
BC - Alberta (IMPORT)792.0 MW
2015WP BASE CASE
SWINGBUS 1520 FOR FC-2009-5:2016-04-30:19:24--1--1-0-0
WED, JUL 27 2011 11:20
2015 NW FMM STUDY
Figure E-2015WP-15
Bus - VOLTAGE (kV/PU)
Branch - MW/Mvar
Equipment - MW/Mvar
100.0%RATEA
1.120OV 0.950UV
kV: <=34.500 <=69.000 <=138.000 <=240.000 <=500.000 >500.000

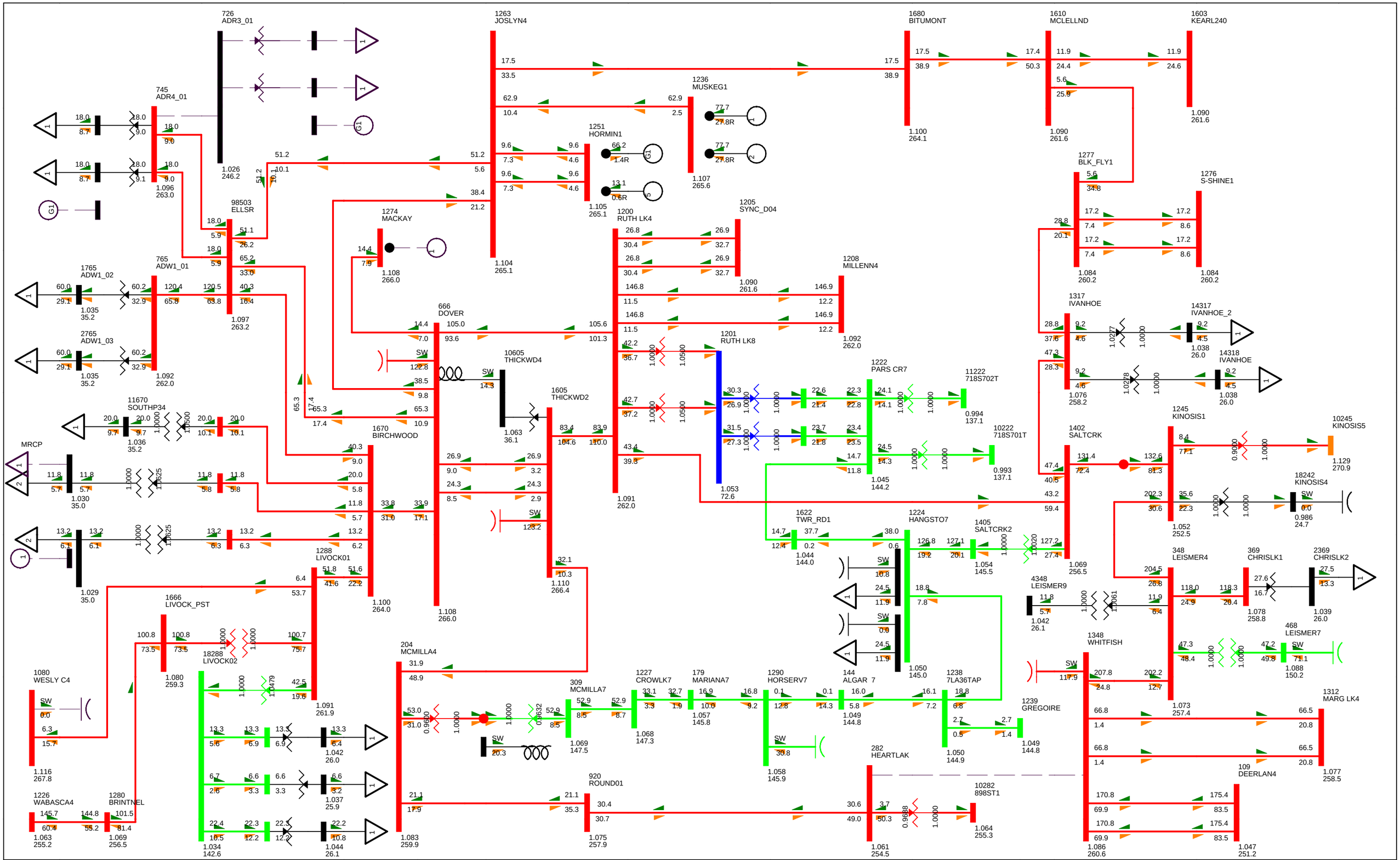

BC - Alberta (IMPORT)790.4 MW

2015WP BASE CASE
SWINGBUS 1520 FOR FC-2009-5:2016-04-30:19:24--1--1-0-0
WED, JUL 27 2011 11:20

2015 NW FMM STUDY

Figure E-2015WP-16

Bus - VOLTAGE (kV/PU)
Branch - MW/Mvar
Equipment - MW/Mvar
100.0%RATEA
1.120OV 0.950UV
kV: <=34.500 <=69.000 <=138.000 <=240.000 <=500.000 >500.000

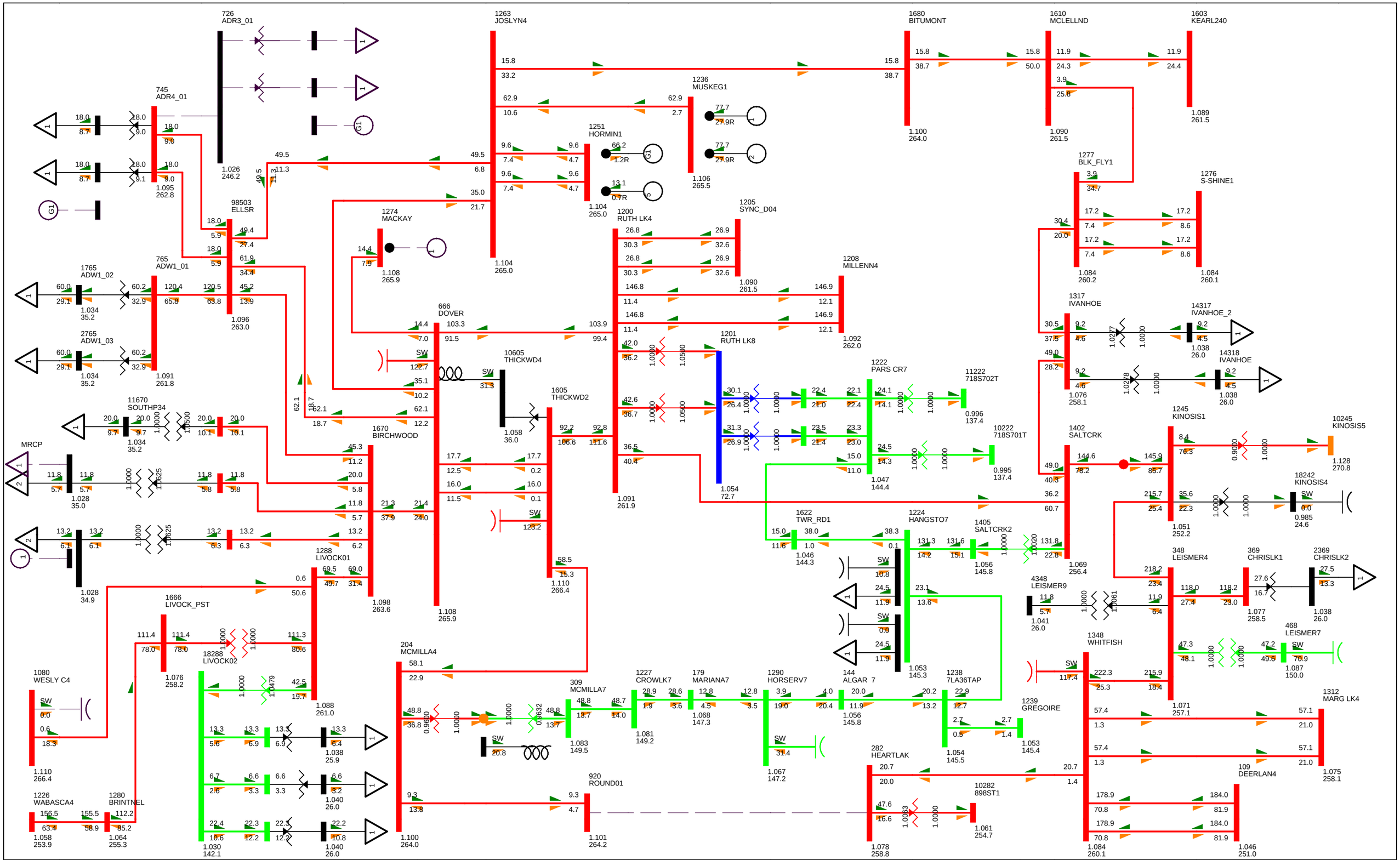

BC - Alberta (IMPORT)784.8 MW

2015WP BASE CASE
SWINGBUS 1520 FOR FC-2009-5:2016-04-30:19:24--1--1-0-0
WED, JUL 27 2011 11:20

2015 NW FMM STUDY

Figure E-2015WP-17

Bus - VOLTAGE (kV/PU)
Branch - MW/Mvar
Equipment - MW/Mvar
100.0%RATEA
1.120OV 0.950UV
kV: <=34.500 <=69.000 <=138.000 <=240.000 <=500.000 >500.000

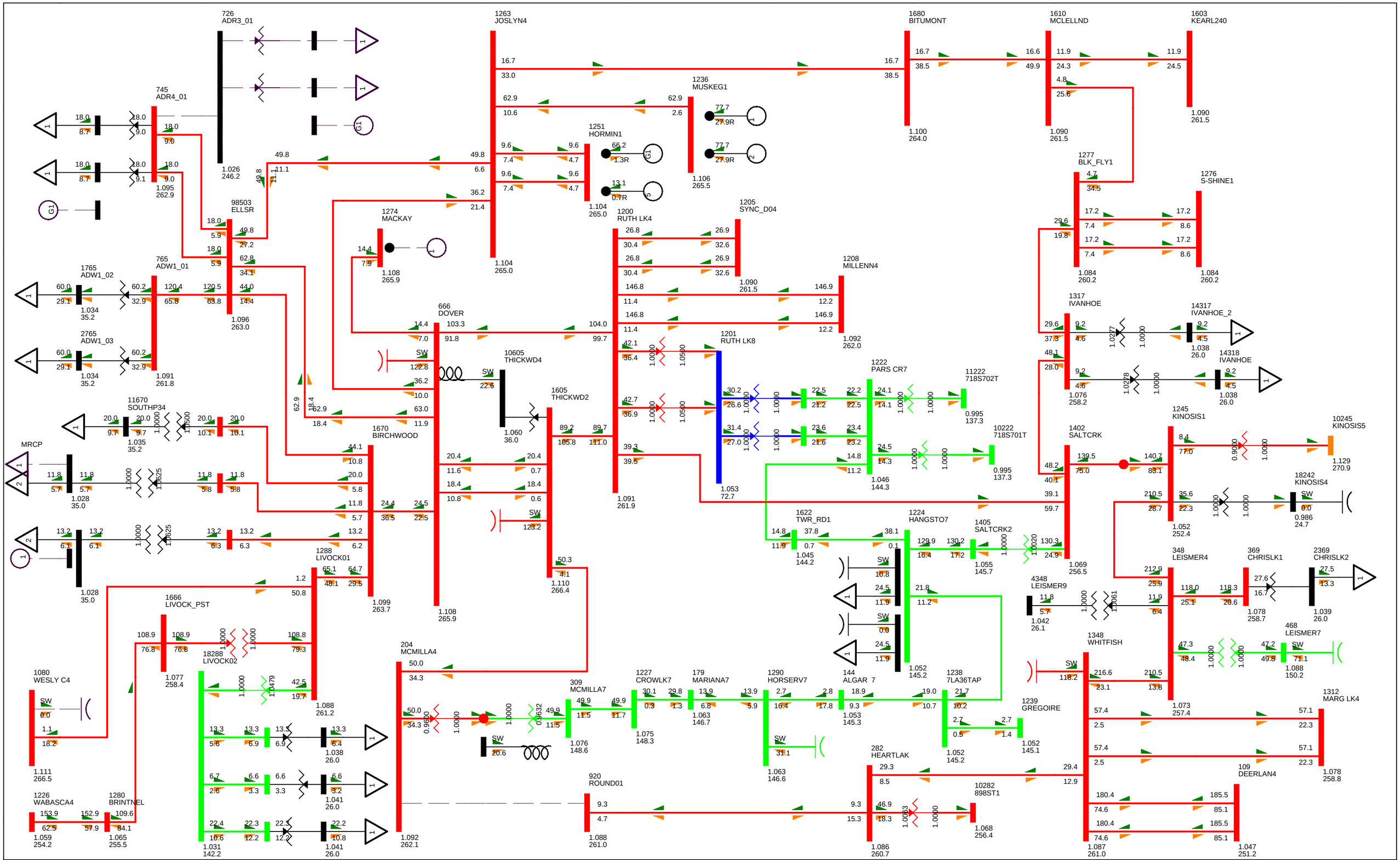

BC - Alberta (IMPORT)783.0 MW

2015WP BASE CASE
SWINGBUS 1520 FOR FC-2009-5:2016-04-30:19:24--1--1-0-0
WED, JUL 27 2011 11:20

2015 NW FMM STUDY

Figure E-2015WP-18

Bus - VOLTAGE (kV/PU)
Branch - MW/Mvar
Equipment - MW/Mvar
100.0%RATEA
1.120OV 0.950UV
kV: <=34.500 <=69.000 <=138.000 <=240.000 <=500.000 >500.000

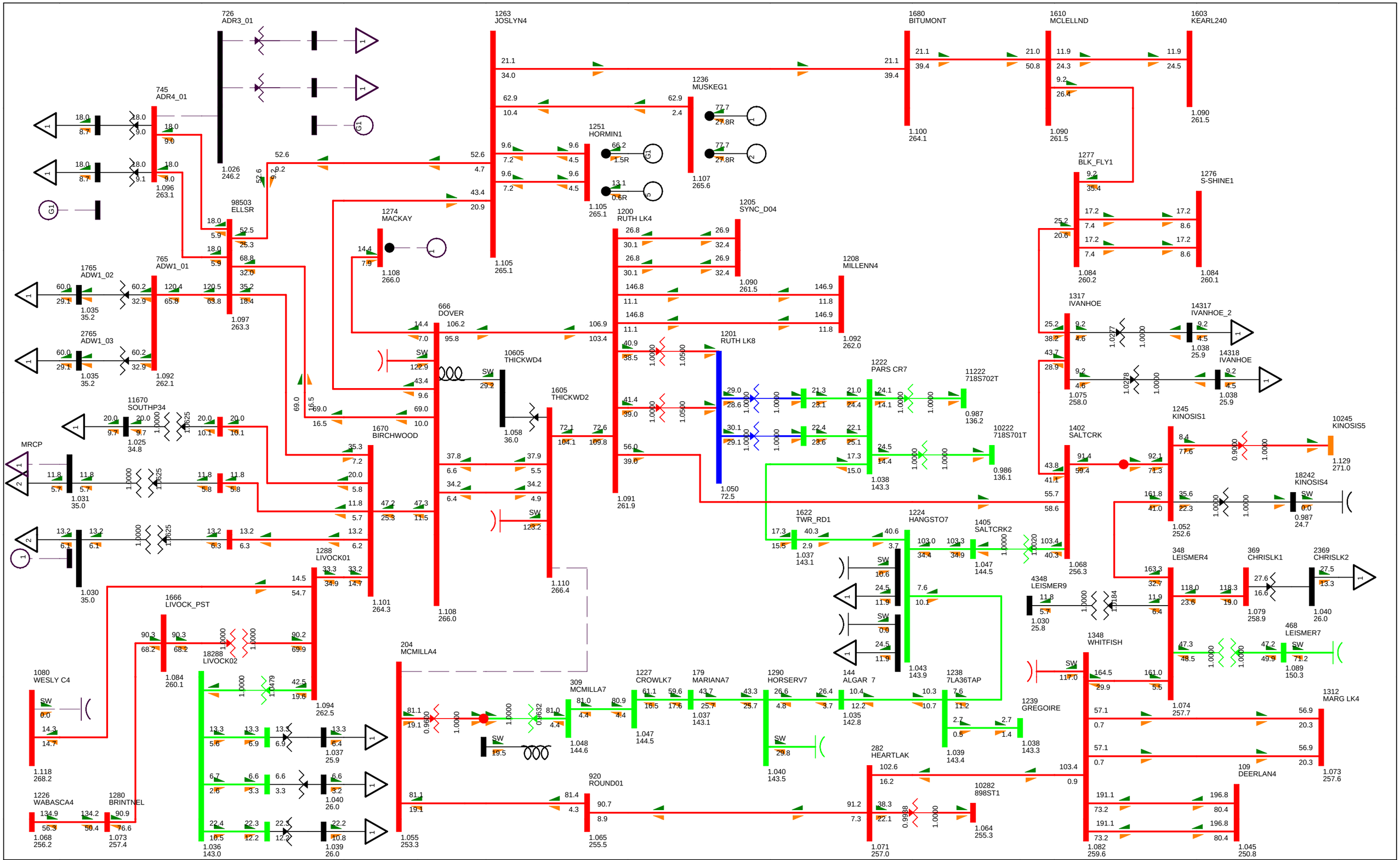

BC - Alberta (IMPORT)776.9 MW

2015WP BASE CASE
SWINGBUS 1520 FOR FC-2009-5:2016-04-30:19:24--1--1-0-0
WED, JUL 27 2011 11:20

2015 NW FMM STUDY

Figure E-2015WP-19

Bus - VOLTAGE (kV/PU)
Branch - MW/Mvar
Equipment - MW/Mvar
100.0%RATEA
1.120OV 0.950UV
kV: <=34.500 <=69.000 <=138.000 <=240.000 <=500.000 >500.000

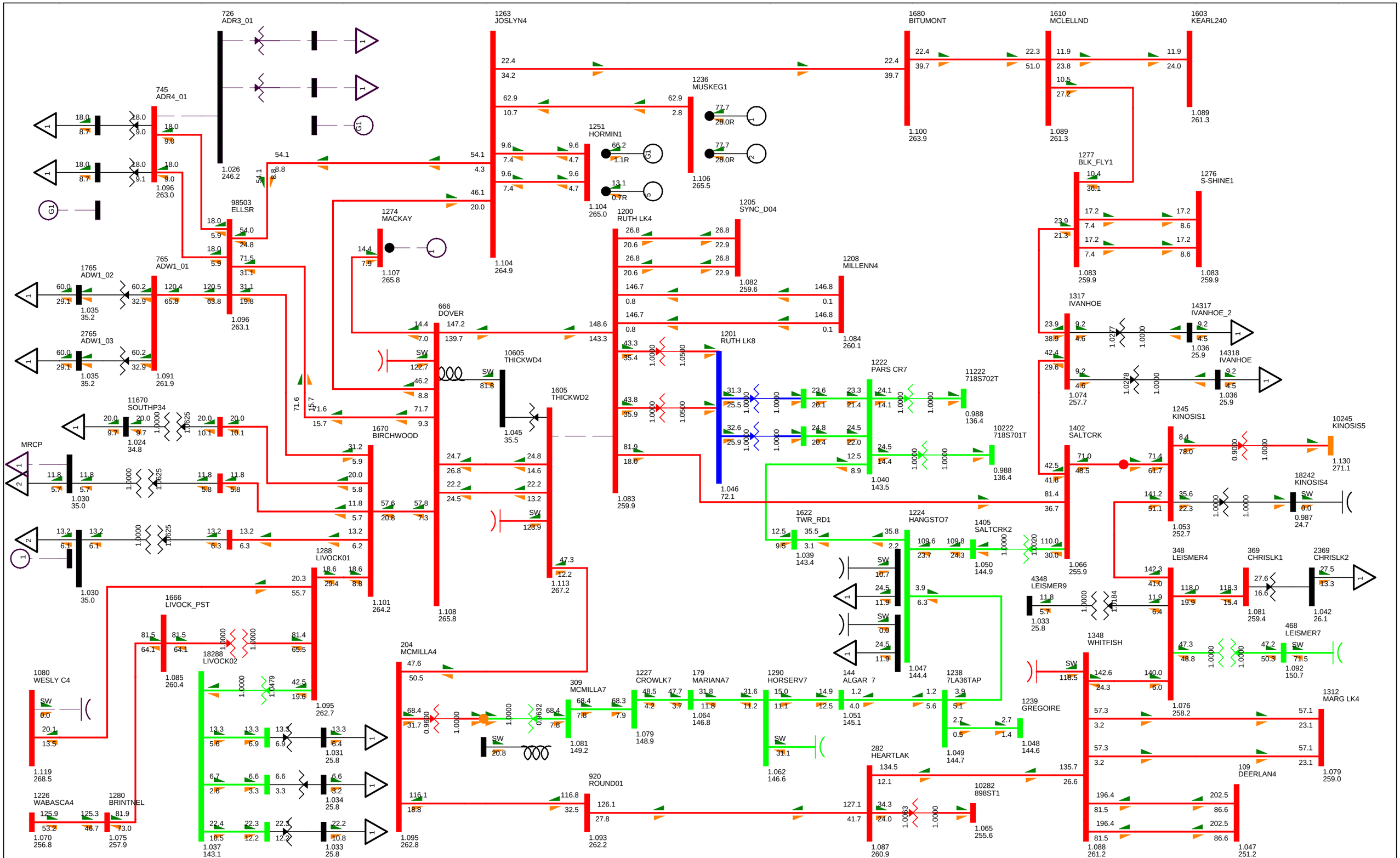

BC - Alberta (IMPORT)775.0 MW

2015WP BASE CASE
SWINGBUS 1520 FOR FC-2009-5:2016-04-30:19:24--1--1-0-0
WED, JUL 27 2011 11:21

2015 NW FMM STUDY

Figure E-2015WP-20

Bus - VOLTAGE (kV/PU)
Branch - MW/Mvar
Equipment - MW/Mvar
100.0%RATEA
1.120OV 0.950UV
kV: <=34.500 <=69.000 <=138.000 <=240.000 <=500.000 >500.000

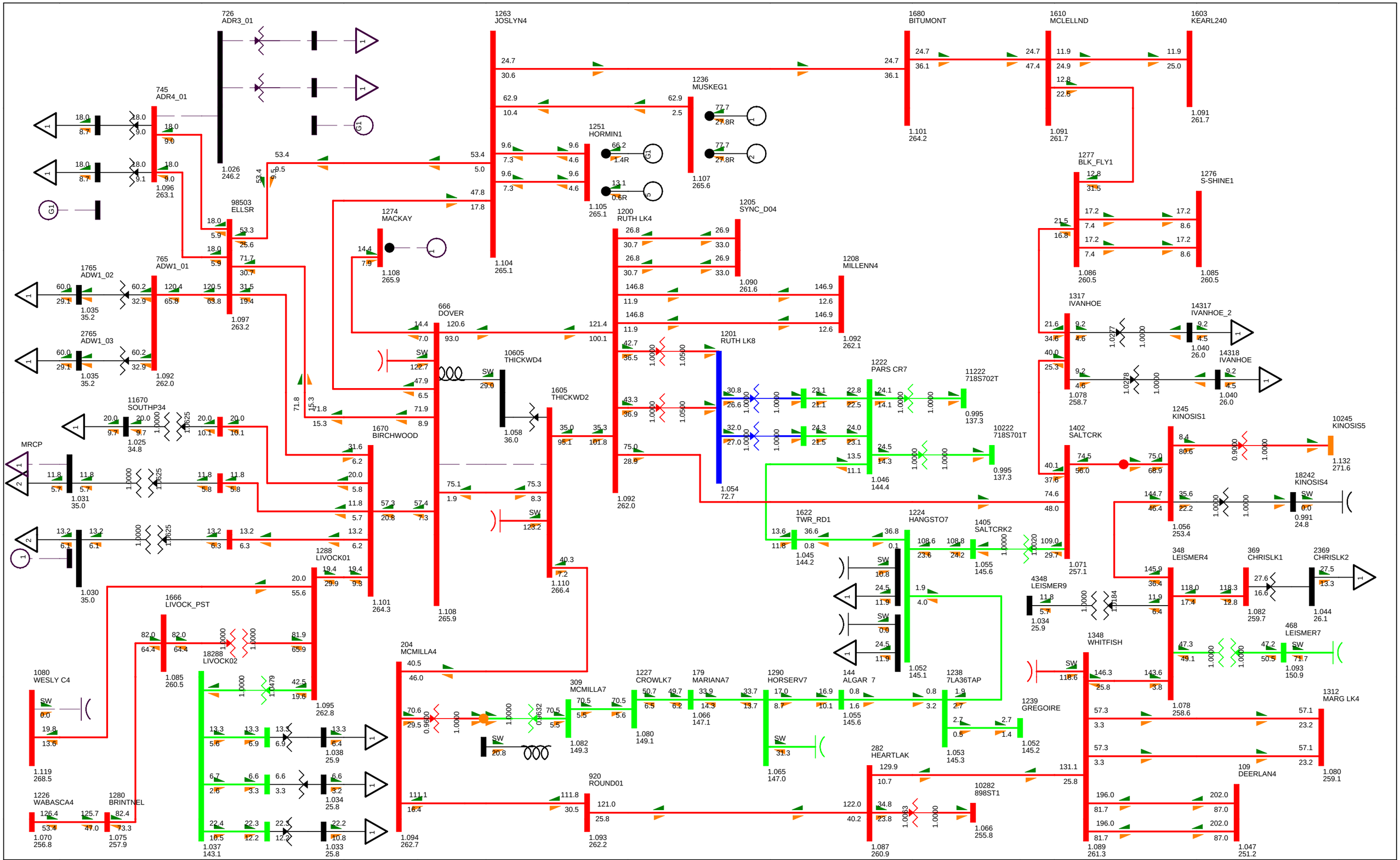

BC - Alberta (IMPORT)774.2 MW

2015WP BASE CASE
SWINGBUS 1520 FOR FC-2009-5:2016-04-30:19:24--1--1-0-0
WED, JUL 27 2011 11:21

2015 NW FMM STUDY

Figure E-2015WP-21

Bus - VOLTAGE (kV/PU)
Branch - MW/Mvar
Equipment - MW/Mvar
100.0%RATEA
1.120OV 0.950UV
kV: <=34.500 <=69.000 <=138.000 <=240.000 <=500.000 >500.000

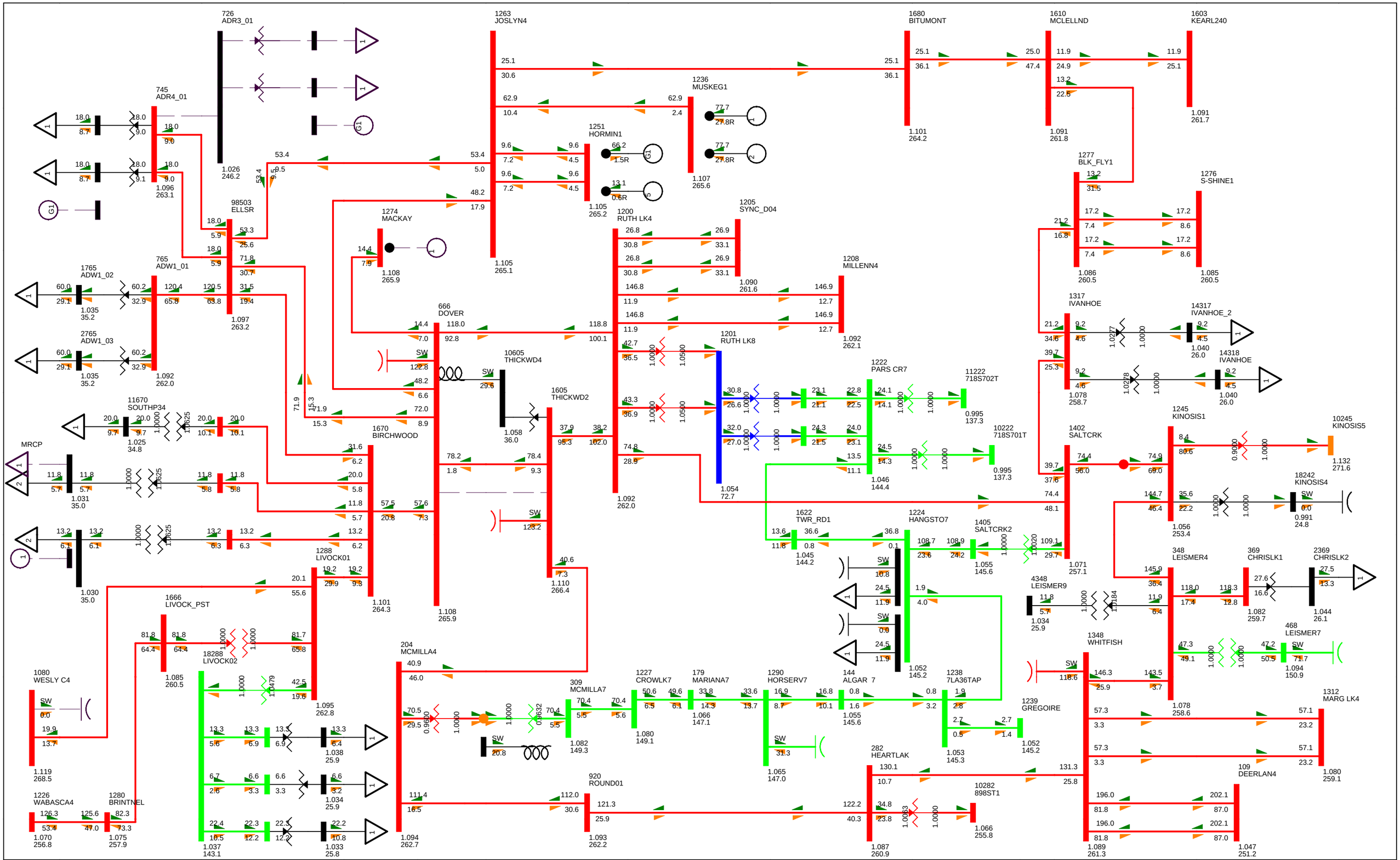

BC - Alberta (IMPORT)774.2 MW

2015WP BASE CASE
SWINGBUS 1520 FOR FC-2009-5:2016-04-30:19:24--1--1-0-0
WED, JUL 27 2011 11:21

2015 NW FMM STUDY

Figure E-2015WP-22

Bus - VOLTAGE (kV/PU)
Branch - MW/Mvar
Equipment - MW/Mvar
100.0%RATEA
1.120OV 0.950UV
kV: <=34.500 <=69.000 <=138.000 <=240.000 <=500.000 >500.000

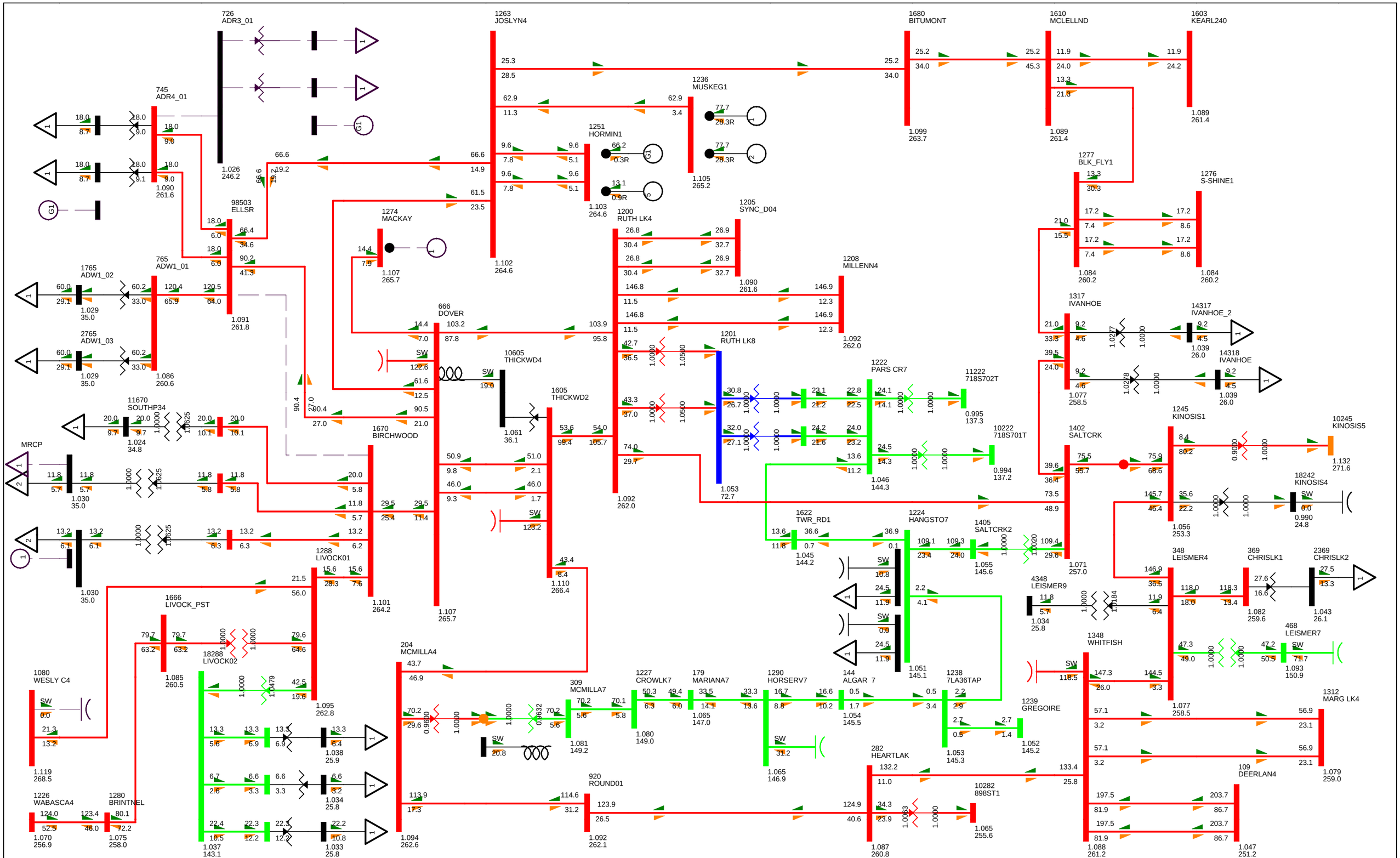

BC - Alberta (IMPORT)773.9 MW

2015WP BASE CASE
SWINGBUS 1520 FOR FC-2009-5:2016-04-30:19:24--1--1-0-0
WED, JUL 27 2011 11:21

2015 NW FMM STUDY

Figure E-2015WP-23

Bus - VOLTAGE (kV/PU)
Branch - MW/Mvar
Equipment - MW/Mvar
100.0%RATEA
1.120OV 0.950UV
kV: <=34.500 <=69.000 <=138.000 <=240.000 <=500.000 >500.000

Table E-7 Power Flow Analysis Summary- 2015 Summer Light with NW FMM

Figure Number	Contingency	Thermal Violation	Voltage Violation
Figure E-2015SL_EX-1	Base Case (N - 0)	None	None
Figure E-2015SL_EX-2	Open 9L56 240kV line (WABASCA 720S to Brintnell 876S)	None	None
Figure E-2015SL_EX-3	Open 9L15 240kV line (Wesley Creek 834S to Livock 939S)	None	None
Figure E-2015SL_EX-4	Open 9L10 240kV line (Brintnell 876S to Livock 939S)	None	None
Figure E-2015SL_EX-5	Open 9L57 240kV line (Livock 939S to Birchwood Creek 960S)	None	None
Figure E-2015SL_EX-6	Open 9L74 240kV line (Birchwood Creek 960S to Dover 888S)	None	None
Figure E-2015SL_EX-7	Open 9L09 240kV line (Dover 888S to Joslyn Creek 849S)	None	None
Figure E-2015SL_EX-8	Open 9L08 240kV line (Ells River to to Dover 888S)	None	None
Figure E-2015SL_EX-9	Open 9L76 240kV line (Ells River to Joslyn Creek 849S)	None	None
Figure E-2015SL_EX-10	Open 9L32 240kV line (Joslyn Creek 849S to Bitumont 941S)	None	None
Figure E-2015SL_EX-11	Open 9L01 240kV line (Dover 888S to Ruth Lake 848S)	None	None
Figure E-2015SL_EX-12	Open 9L23 240kV line (Ruth Lake 848S to Salt Creek 977S)	None	None
Figure E-2015SL_EX-13	Open 9L990 240kV line (Salt Creek 977S to Kinosis 856S)	None	None
Figure E-2015SL_EX-14	Open 9L990 240kV line (Kinosis 856S to Leismer 72S)	None	None
Figure E-2015SL_EX-15	Open 9L930 240kV line (Leismer 72S to Whitefish Lake 825S)	None	None
Figure E-2015SL_EX-16	Open 9L22 240kV line (Whitefish Lake 825S to Heart Lake 898S)	None	None
Figure E-2015SL_EX-17	Open 9L47 240kV line (Heart Lake 898S to RoundHill POD)	None	None
Figure E-2015SL_EX-18	Open 9L55 240kV line (RoundHill POD to McMillan 885S)	None	None
Figure E-2015SL_EX-19	Open 9L07 240kV line (McMillan 885S TO Dover 888S)	None	None

Figure E-2015SL_EX-20	Open 9L58 240kV line (Ruth Lake 848S to Thickwood 951S)	None	None
Figure E-2015SL_EX-21	Open 9L68 240kV line (Thickwood 951S TO Dover 888S)	None	None
Figure E-2015SL_EX-22	Open 9L30 240kV line (McMillan 885S TO Dover 888S)	None	None
Figure E-2015SL_EX-23	Open 9L95 240kV line (Ells River 2079S TO Birchwood 960S)	None	None

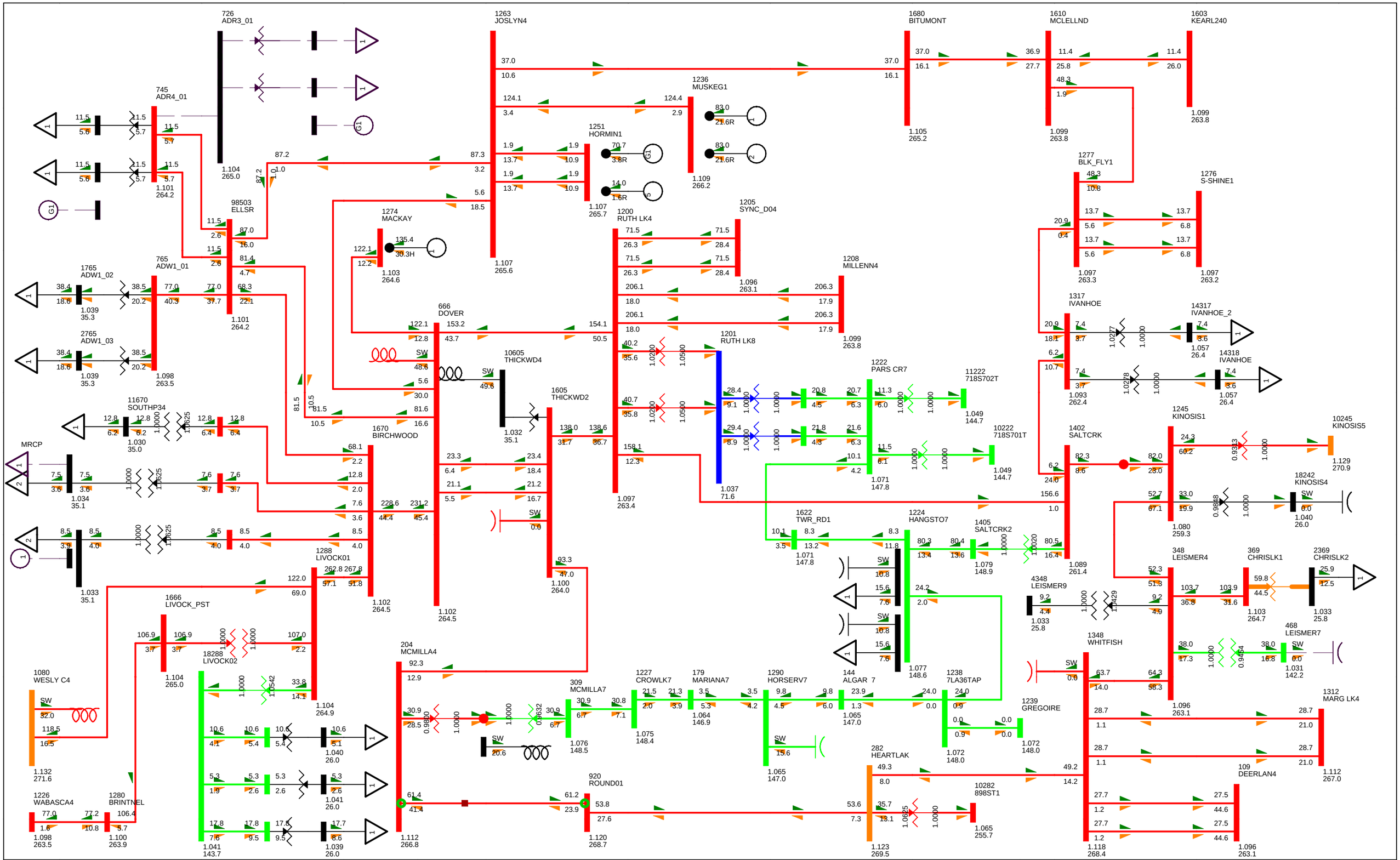

BC - Alberta (IMPORT)-52.7 MW

2015SL BASE CASE
SWINGBUS 1520 FOR FC-2009-5:2015-10-31:14:14--1--1-0-0
WED, JUL 27 2011 9:45

2015 NW FMM STUDY

Figure E-2015SL-1

Bus - VOLTAGE (kV/PU)
Branch - MW/Mvar
Equipment - MW/Mvar
100.0%RATEA
1.120OV 0.950UV
kV: <=34.500 <=69.000 <=138.000 <=240.000 <=500.000 >500.000

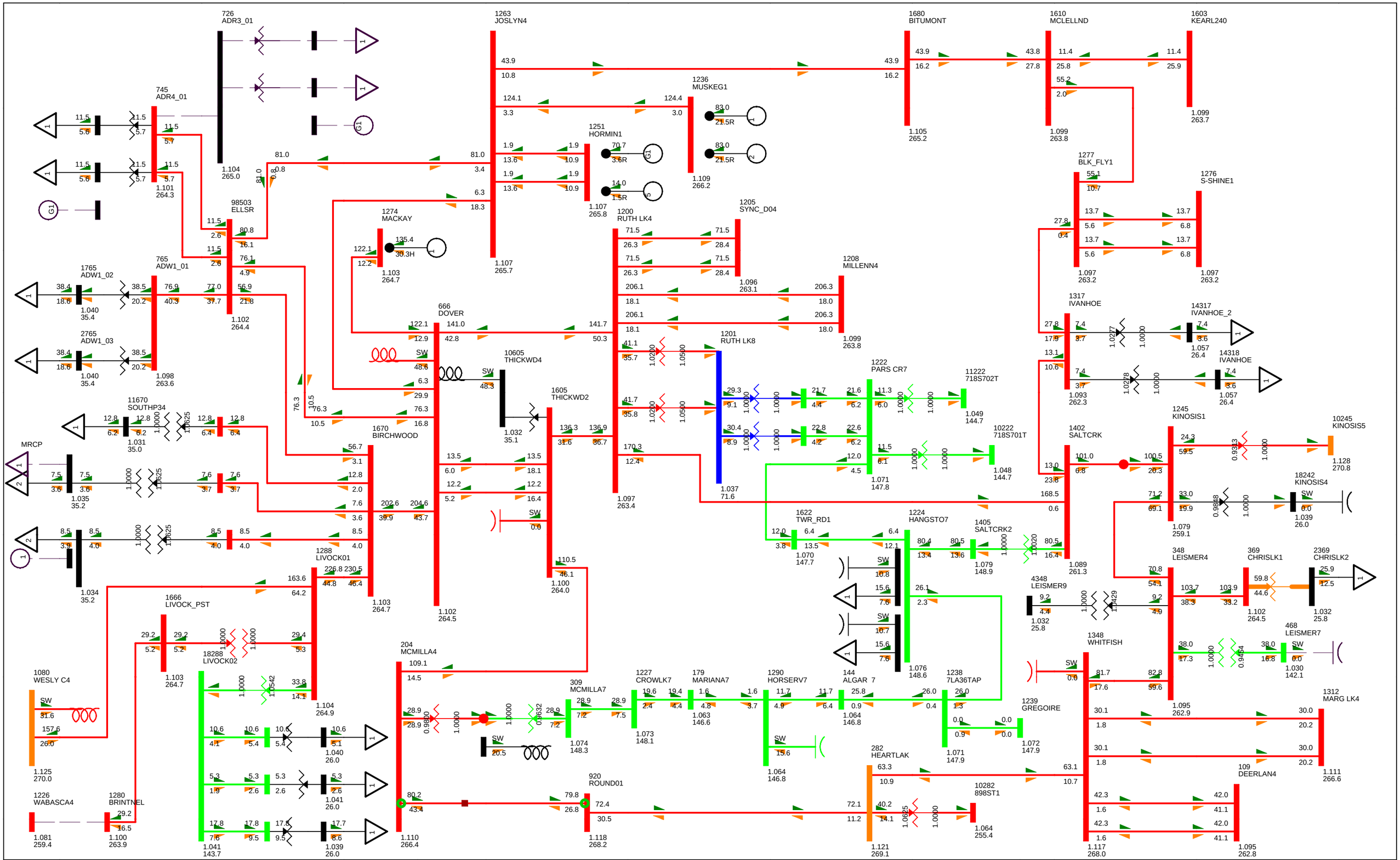

BC - Alberta (IMPORT)-50.4 MW

2015SL BASE CASE
SWINGBUS 1520 FOR FC-2009-5:2015-10-31:14:14--1--1-0-0
WED, JUL 27 2011 9:45

2015 NW FMM STUDY

Figure E-2015SL-2

Bus - VOLTAGE (kV/PU)
Branch - MW/Mvar
Equipment - MW/Mvar
100.0%RATEA
1.120OV 0.950UV
kV: <=34.500 <=69.000 <=138.000 <=240.000 <=500.000 >500.000

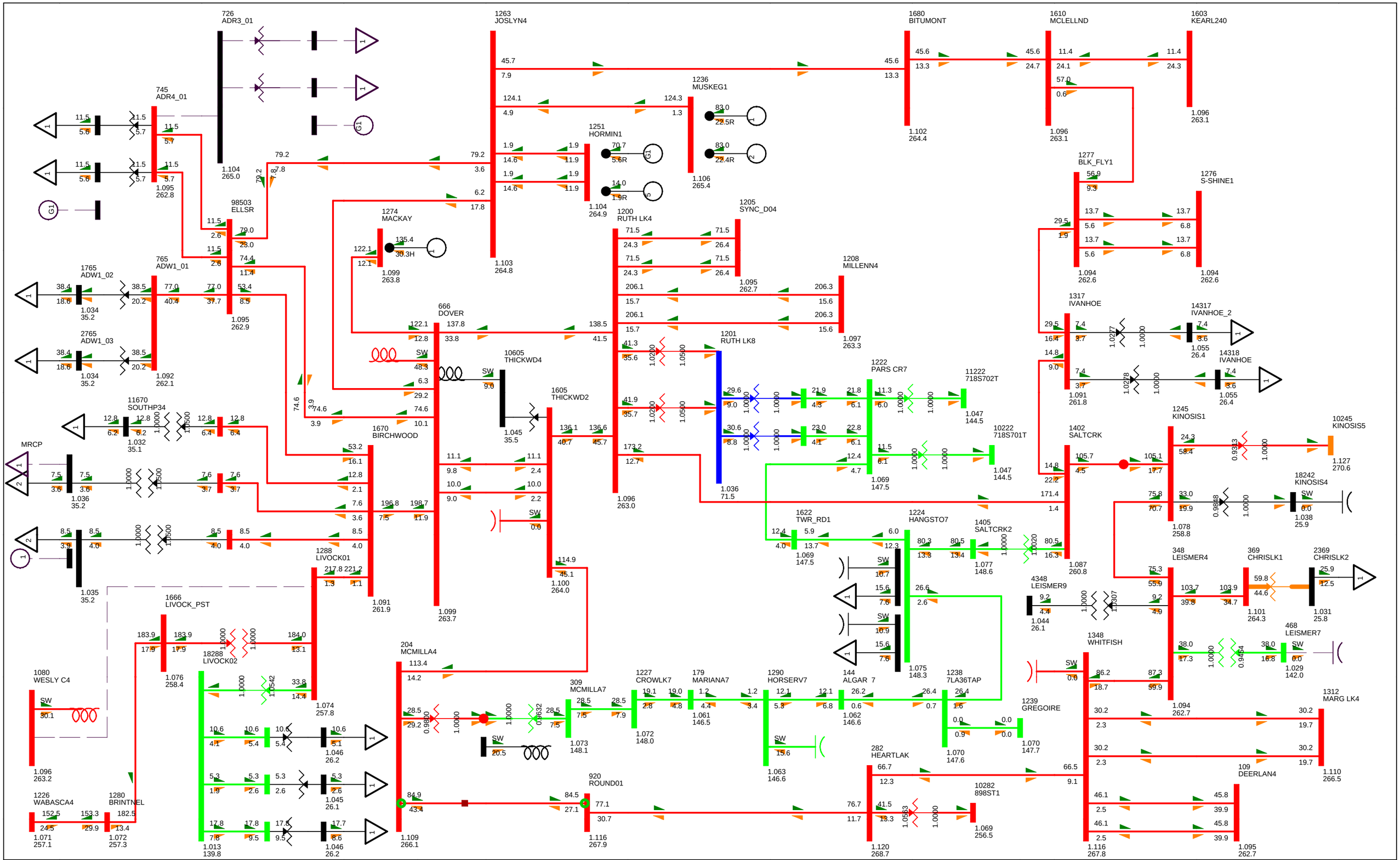

BC - Alberta (IMPORT)-42.0 MW

2015SL BASE CASE
SWINGBUS 1520 FOR FC-2009-5:2015-10-31:14:14--1--1-0-0
WED, JUL 27 2011 9:45

2015 NW FMM STUDY

Figure E-2015SL-3

Bus - VOLTAGE (kV/PU)
Branch - MW/Mvar
Equipment - MW/Mvar
100.0%RATEA
1.120OV 0.950UV
kV: <=34.500 <=69.000 <=138.000 <=240.000 <=500.000 >500.000

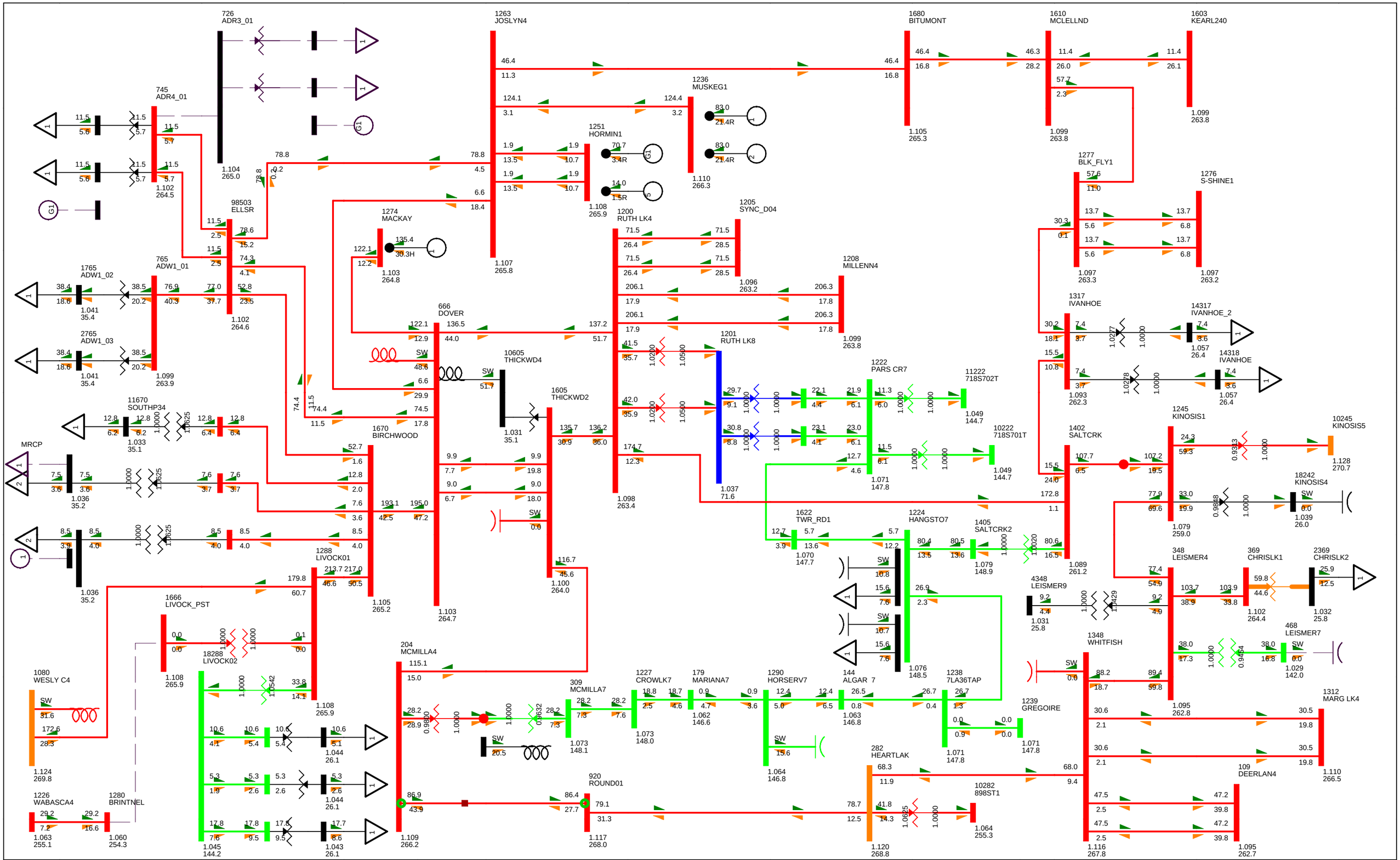

BC - Alberta (IMPORT)-48.0 MW

2015SL BASE CASE
SWINGBUS 1520 FOR FC-2009-5:2015-10-31:14:14--1--1-0-0
WED, JUL 27 2011 9:45

2015 NW FMM STUDY

Figure E-2015SL-4

Bus - VOLTAGE (kV/PU)
Branch - MW/Mvar
Equipment - MW/Mvar
100.0%RATEA
1.120OV 0.950UV
kV: <=34.500 <=69.000 <=138.000 <=240.000 <=500.000 >500.000

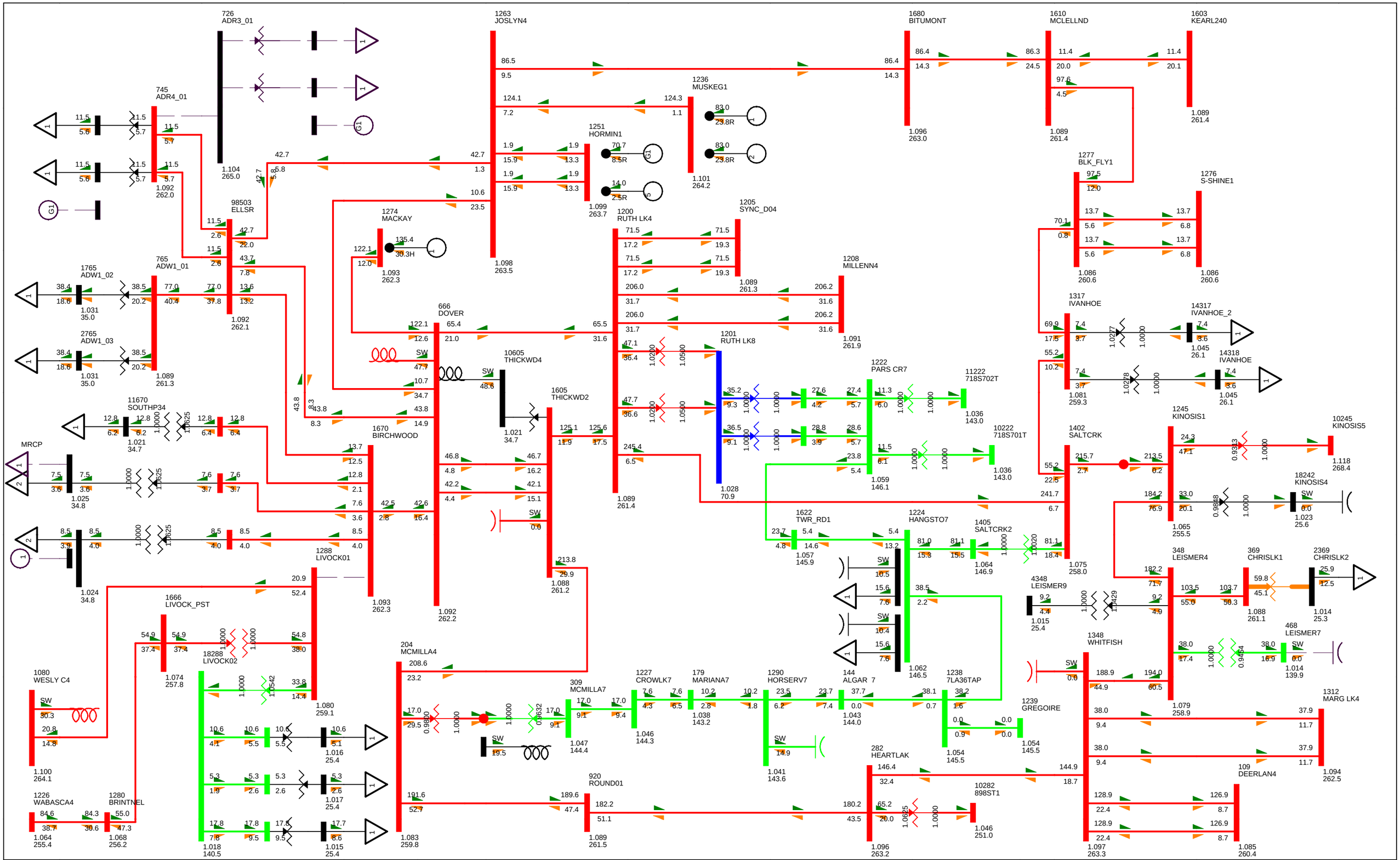

BC - Alberta (IMPORT)-7.7 MW

2015SL BASE CASE
SWINGBUS 1520 FOR FC-2009-5:2015-10-31:14:14--1--1-0-0
WED, JUL 27 2011 9:46

2015 NW FMM STUDY

Figure E-2015SL-5

Bus - VOLTAGE (kV/PU)
Branch - MW/Mvar
Equipment - MW/Mvar
100.0%RATEA
1.120OV 0.950UV
kV: <=34.500 <=69.000 <=138.000 <=240.000 <=500.000 >500.000

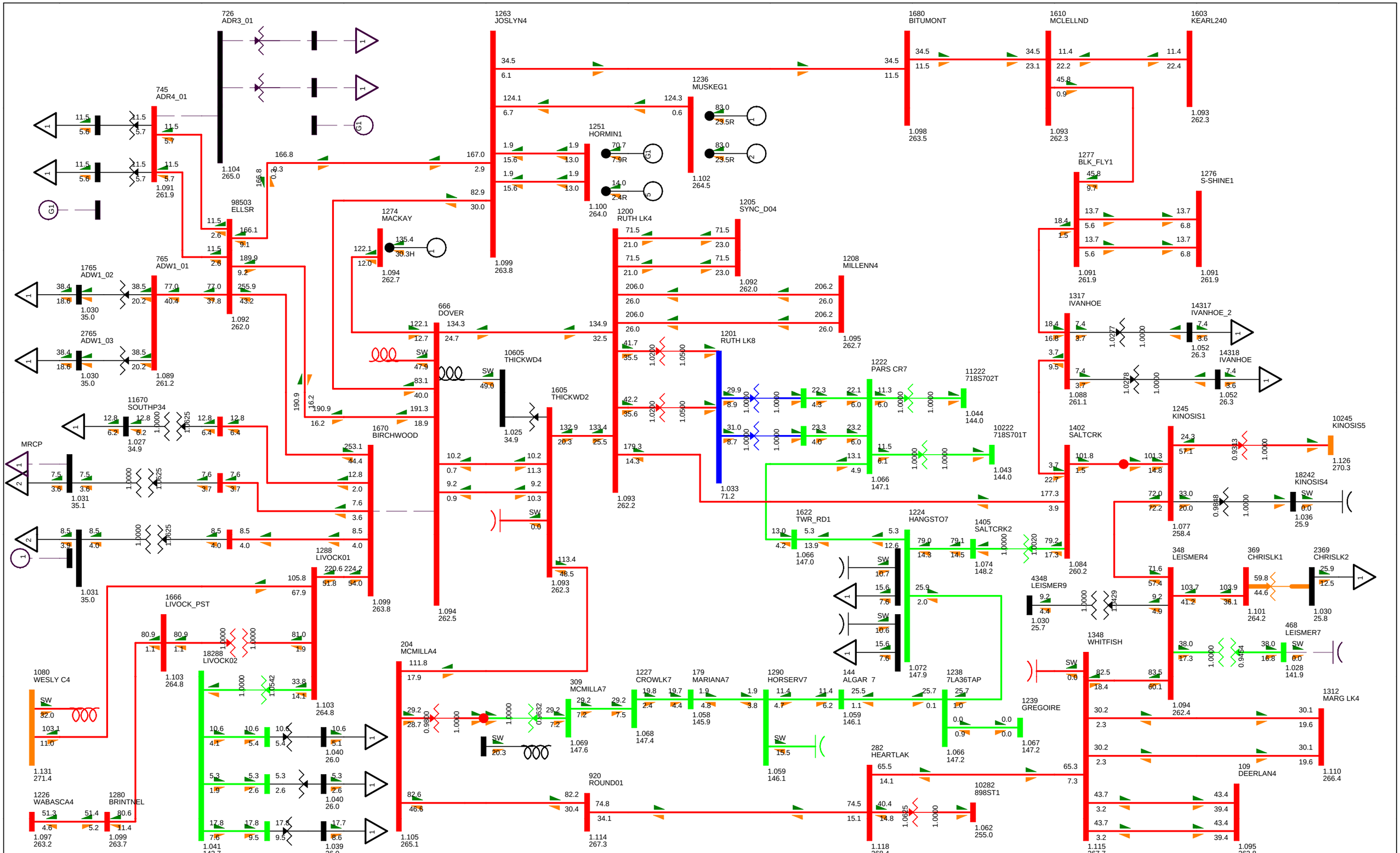

BC - Alberta (IMPORT)-48.2 MW

2015SL BASE CASE
SWINGBUS 1520 FOR FC-2009-5:2015-10-31:14:14--1--1-0-0
WED, JUL 27 2011 9:46

2015 NW FMM STUDY

Figure E-2015SL-6

Bus - VOLTAGE (kV/PU)
Branch - MW/Mvar
Equipment - MW/Mvar
100.0%RATEA
1.120OV 0.950UV
kV: <=34.500 <=69.000 <=138.000 <=240.000 <=500.000 >500.000

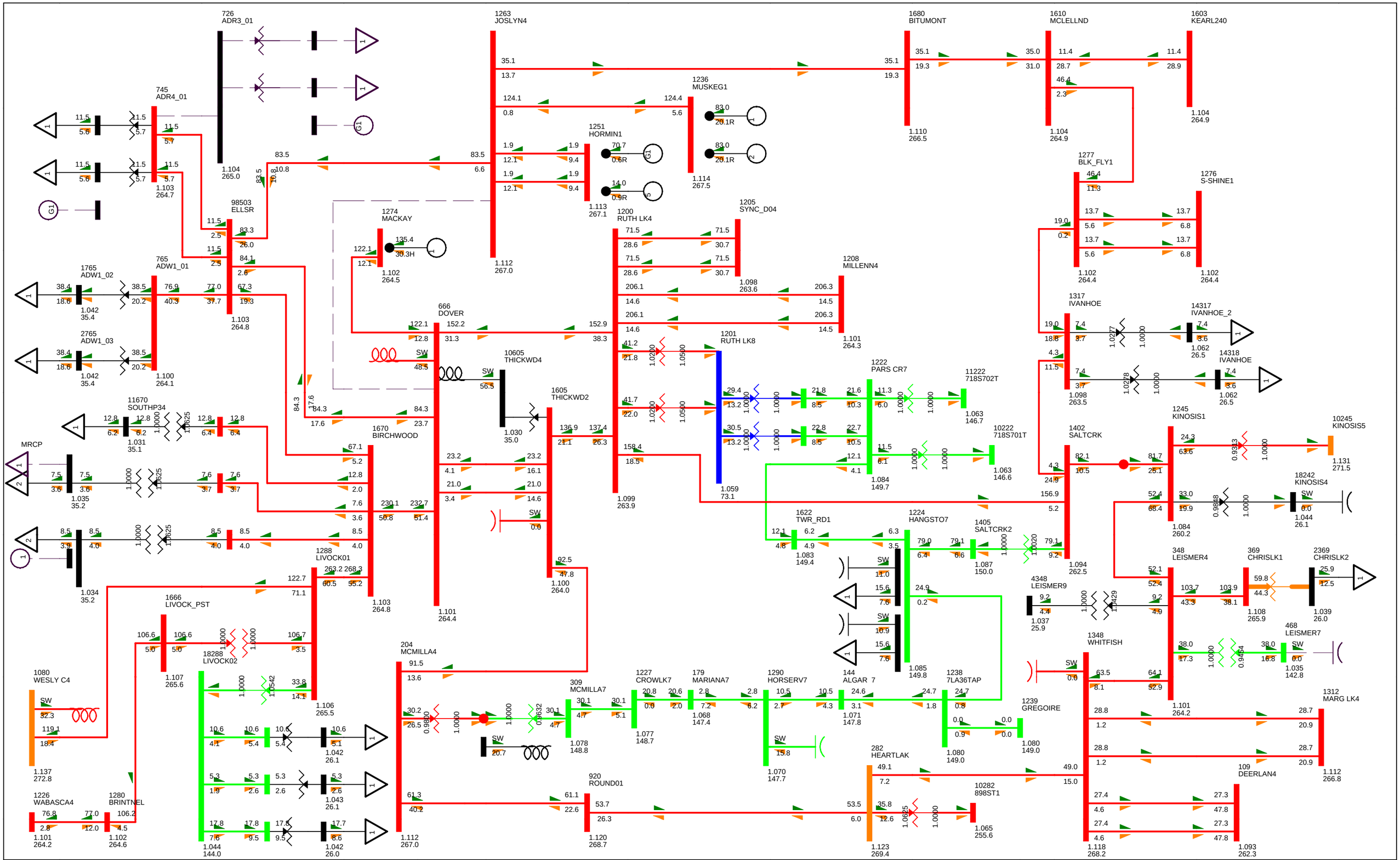

BC - Alberta (IMPORT)-52.7 MW

2015SL BASE CASE
SWINGBUS 1520 FOR FC-2009-5:2015-10-31:14:14--1--1-0-0
WED, JUL 27 2011 9:46

2015 NW FMM STUDY

Figure E-2015SL-7

Bus - VOLTAGE (kV/PU)
Branch - MW/Mvar
Equipment - MW/Mvar
100.0%RATEA
1.120OV 0.950UV
kV: <=34.500 <=69.000 <=138.000 <=240.000 <=500.000 >500.000

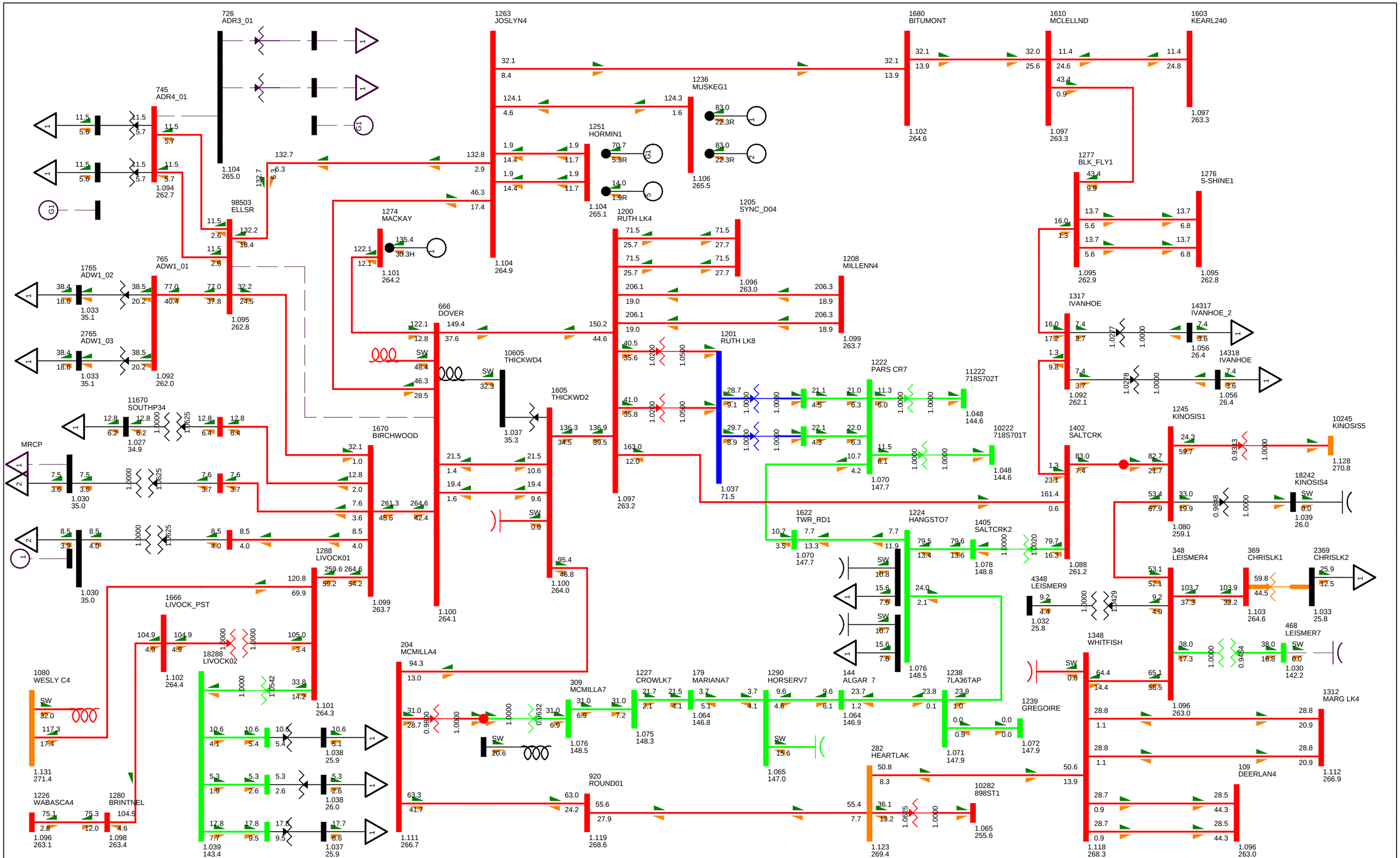
726
ADR3_01
745
ADR4_01
1263
JOSLYN4
1680
BITUMONT
1610
MCLELLND
1603
KEARL240
1236
MUSKEG1
1251
HORMIN1
1277
BLK_FLY1
1276
S-SHINE1
98503
ELLSR
1274
MACKAY
1200
RUTH LK4
1205
SYNC_D04
765
ADW1_01
1765
ADW1_02
2765
ADW1_03
1208
MILLENN4
666
DOVER
1201
RUTH LK8
1222
PARS CR7
11222
718S702T
10222
718S701T
1317
IVANHOE
14317
IVANHOE_2
14318
IVANHOE
1402
SALTCRK
1245
KINOSIS1
10245
KINOSIS5
18242
KINOSIS4
10605
THICKWD4
1605
THICKWD2
11670
SOUTHP34
1670
BIRCHWOOD
MRCP
1288
LIVOCK01
1666
LIVOCK_PST
18288
LIVOCK02
204
MCMILLA4
309
MCMILLA7
1227
CROWLK7
179
MARIANA7
1290
HORSERV7
144
ALGAR 7
1238
7LA36TAP
1239
GREGOIRE
1622
TWR_RD1
1224
HANGSTO7
1405
SALTCRK2
4348
LEISMER9
348
LEISMER4
369
CHRISLK1
2369
CHRISLK2
468
LEISMER7
1348
WHITFISH
1312
MARG LK4
109
DEERLAN4
1080
WESLY C4
1226
WABASCA4
1280
BRINTNEL
920
ROUND01
282
HEARTLAK
10282
898ST1
1080
259.1
1088
261.2
1096
263.0
1118
268.3
1123
269.4
1065
255.6
1119
268.6
1111
266.7
1100
264.1
1099
263.7
1101
264.3
1102
264.4
1104
265.0
1094
262.7
1095
262.8
1092
262.0
1033
35.1
1030
35.0
1027
34.9
1038
25.9
1038
26.0
1039
143.4
1037
25.9
1131
271.4
1096
263.1
1098
263.4
1100
264.0
1101
264.2
1104
264.9
1104
265.1
1106
265.5
1102
264.6
1097
263.3
1097
263.2
1096
262.9
1095
262.8
1092
262.1
1056
26.4
1056
26.4
1048
144.6
1048
144.6
1070
147.7
1037
71.5
1064
146.8
1064
146.9
1075
148.3
1076
148.5
1071
147.9
1072
147.9
1065
147.0
1070
147.7
1078
148.8
1076
148.5
1032
25.8
1103
264.6
1033
25.8
1030
142.2
1080
259.1
1039
26.0
1128
270.8
1112
266.9
1096
263.0
1099
263.7
1100
264.1
1111
266.7
1119
268.6
1123
269.4
1065
255.6
1118
268.3
1096
263.0
1098
263.4
1096
263.1
1131
271.4
1038
25.9
1038
26.0
1039
143.4
1037
25.9
1030
35.0
1030
35.0
1027
34.9
1033
35.1
1033
35.1
1092
262.0
1095
262.8
1094
262.7
1104
265

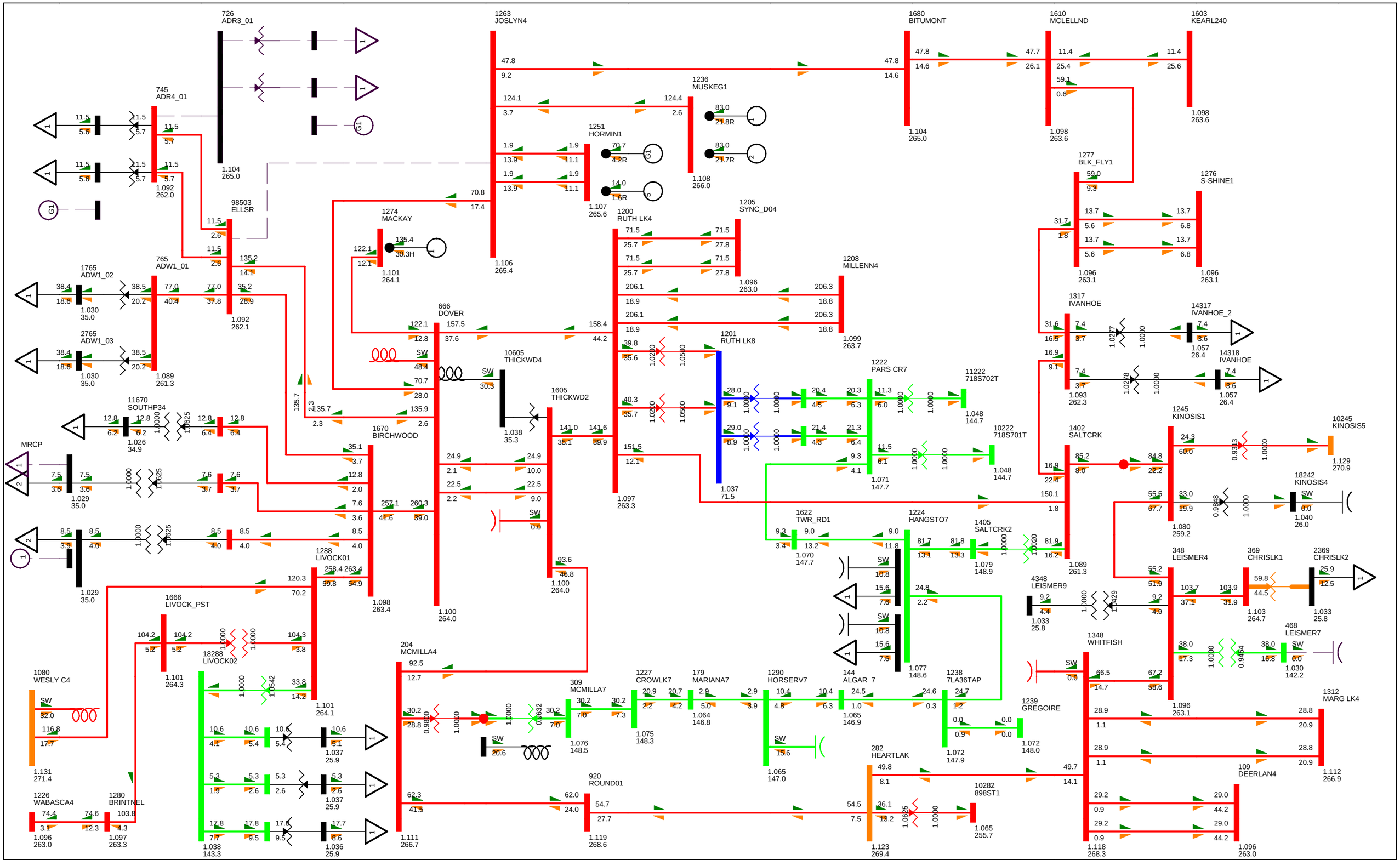

BC - Alberta (IMPORT)-51.8 MW

2015SL BASE CASE
SWINGBUS 1520 FOR FC-2009-5:2015-10-31:14:14--1--1-0-0
WED, JUL 27 2011 9:46

2015 NW FMM STUDY

Figure E-2015SL-9

Bus - VOLTAGE (kV/PU)
Branch - MW/Mvar
Equipment - MW/Mvar
100.0%RATEA
1.120OV 0.950UV
kV: <=34.500 <=69.000 <=138.000 <=240.000 <=500.000 >500.000

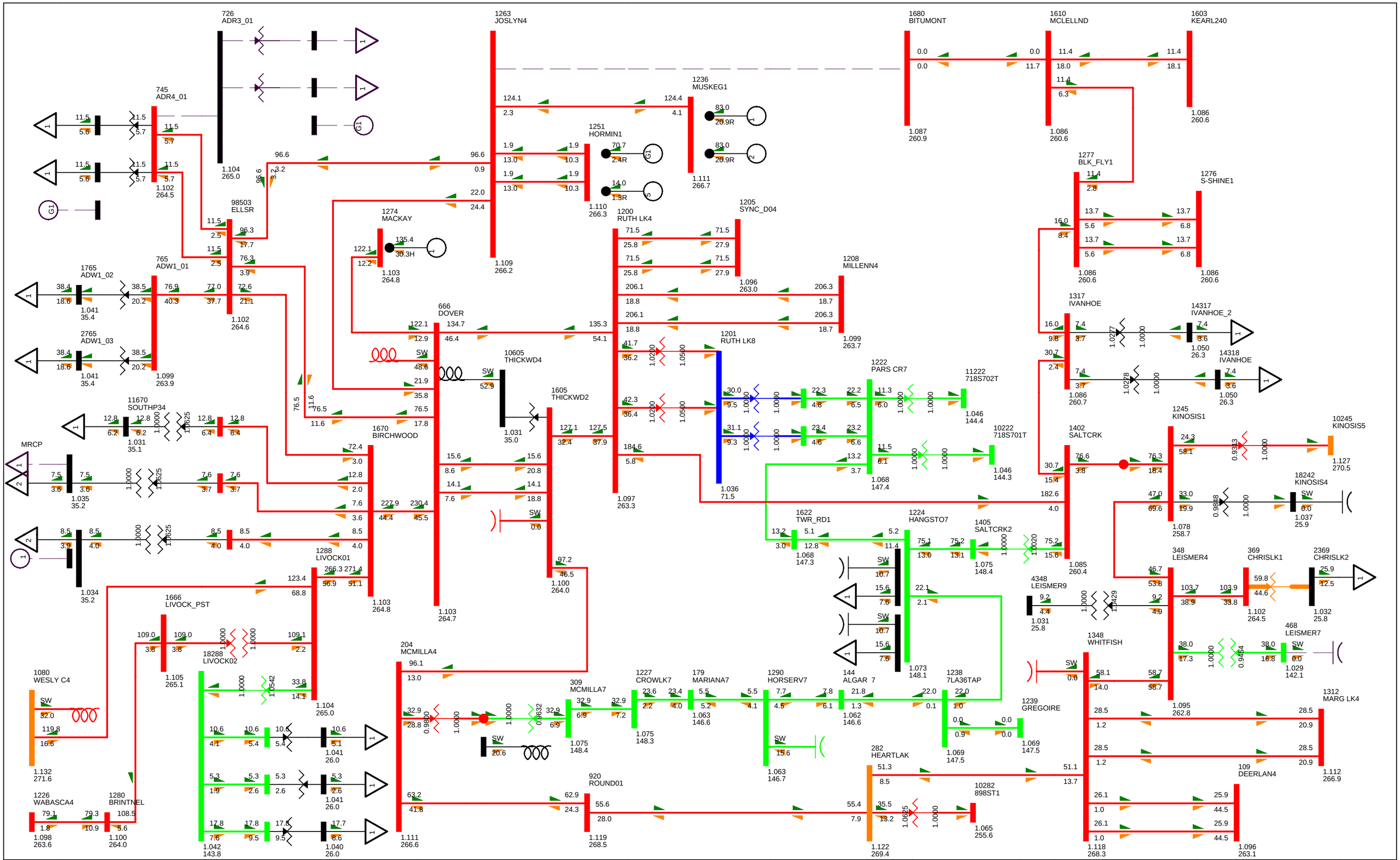

BC - Alberta (IMPORT)-52.5 MW

2015SL BASE CASE
SWINGBUS 1520 FOR FC-2009-5:2015-10-31:14:14--1--1-0-0
WED, JUL 27 2011 9:46

2015 NW FMM STUDY

Figure E-2015SL-10

Bus - VOLTAGE (kV/PU)
Branch - MW/Mvar
Equipment - MW/Mvar
100.0%RATEA
1.120OV 0.950UV
kV: <=34.500 <=69.000 <=138.000 <=240.000 <=500.000 >500.000

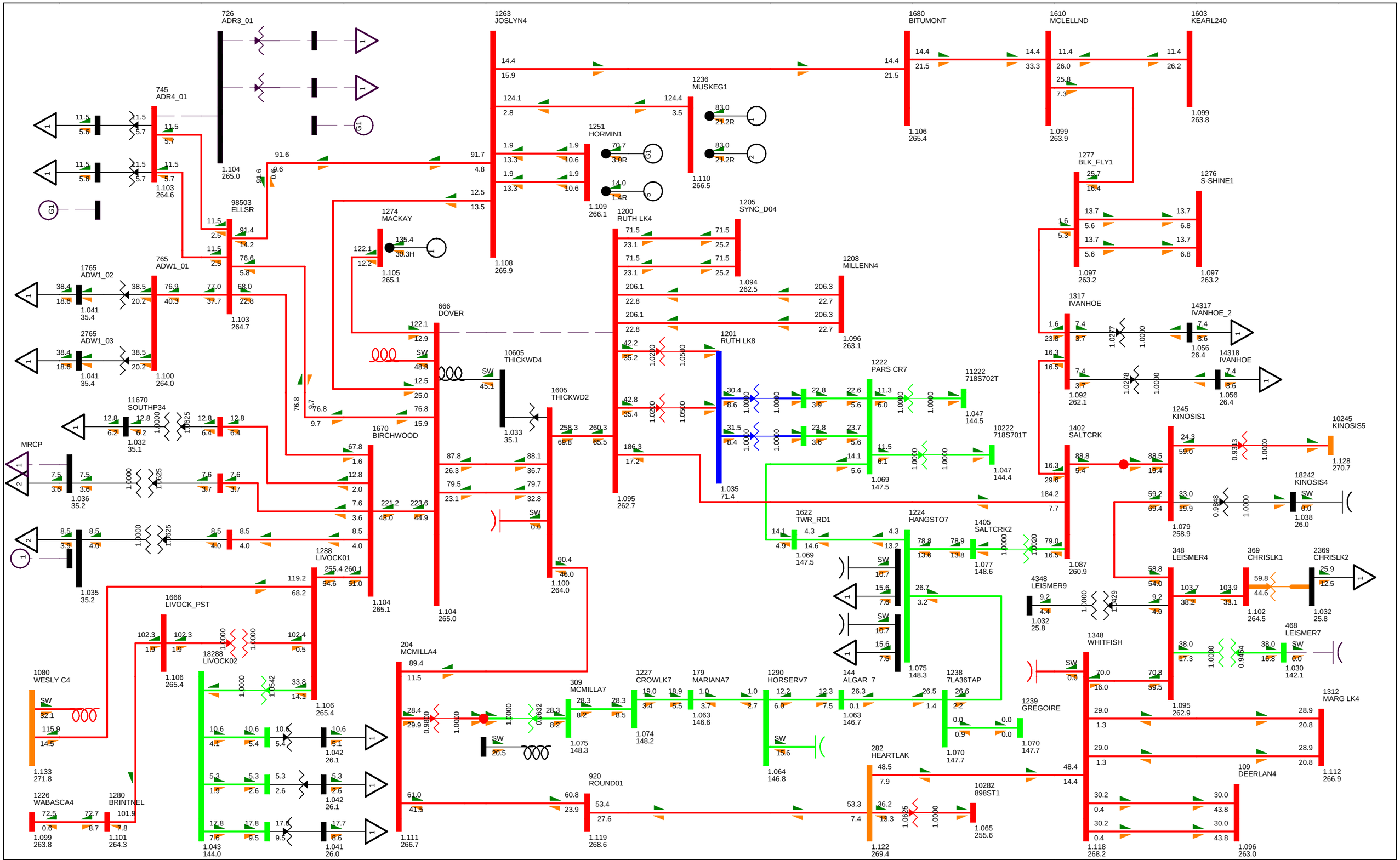

BC - Alberta (IMPORT)-51.1 MW

2015SL BASE CASE
SWINGBUS 1520 FOR FC-2009-5:2015-10-31:14:14--1--1-0-0
WED, JUL 27 2011 9:46

2015 NW FMM STUDY

Figure E-2015SL-11

Bus - VOLTAGE (kV/PU)
Branch - MW/Mvar
Equipment - MW/Mvar
100.0%RATEA
1.120OV 0.950UV
kV: <=34.500 <=69.000 <=138.000 <=240.000 <=500.000 >500.000

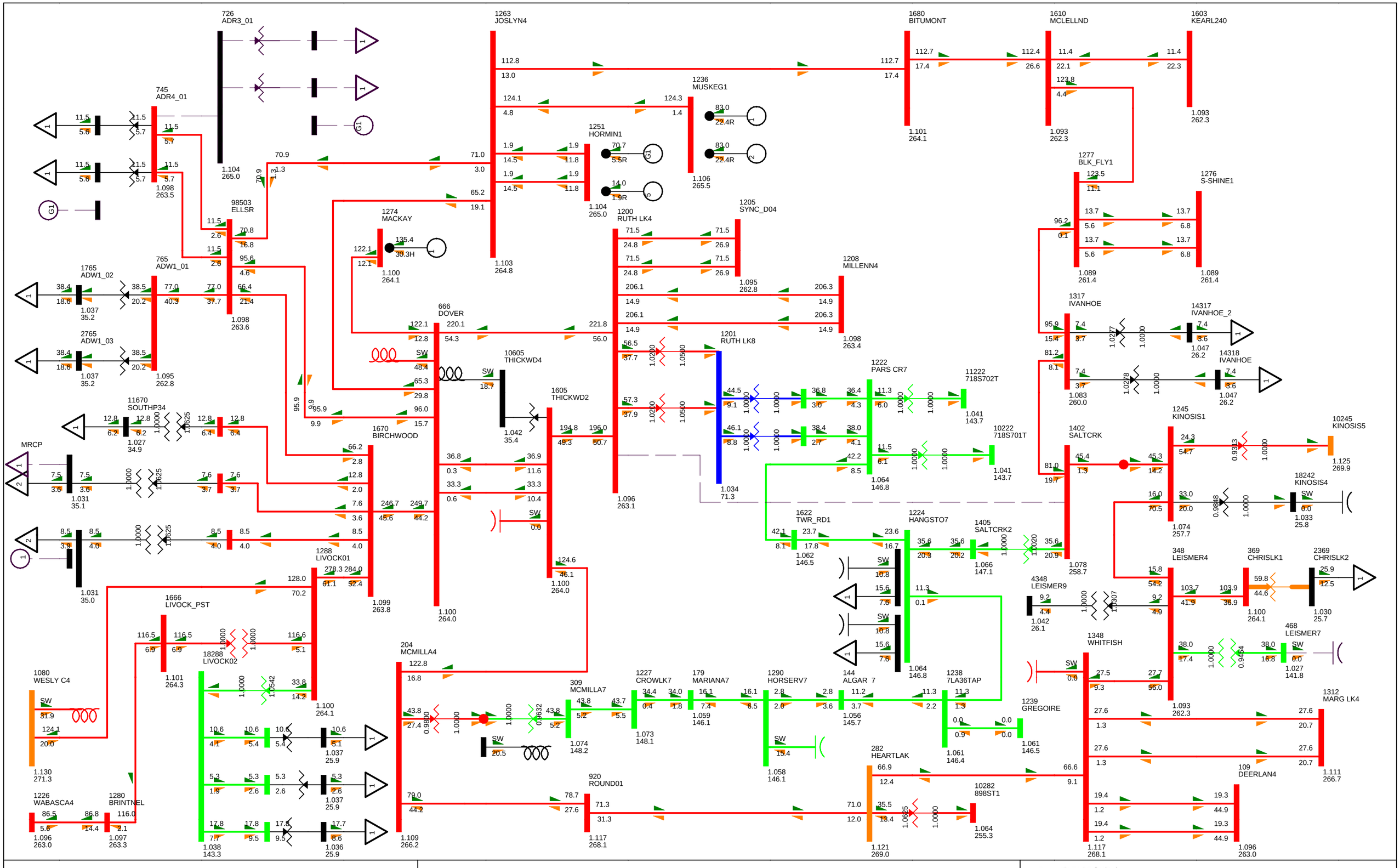

BC - Alberta (IMPORT)-49.8 MW

2015SL BASE CASE
SWINGBUS 1520 FOR FC-2009-5:2015-10-31:14:14--1--1-0-0
WED, JUL 27 2011 9:46

2015 NW FMM STUDY

Figure E-2015SL-12

Bus - VOLTAGE (kV/PU)
Branch - MW/Mvar
Equipment - MW/Mvar
100.0%RATEA
1.120OV 0.950UV
kV: <=34.500 <=69.000 <=138.000 <=240.000 <=500.000 >500.000

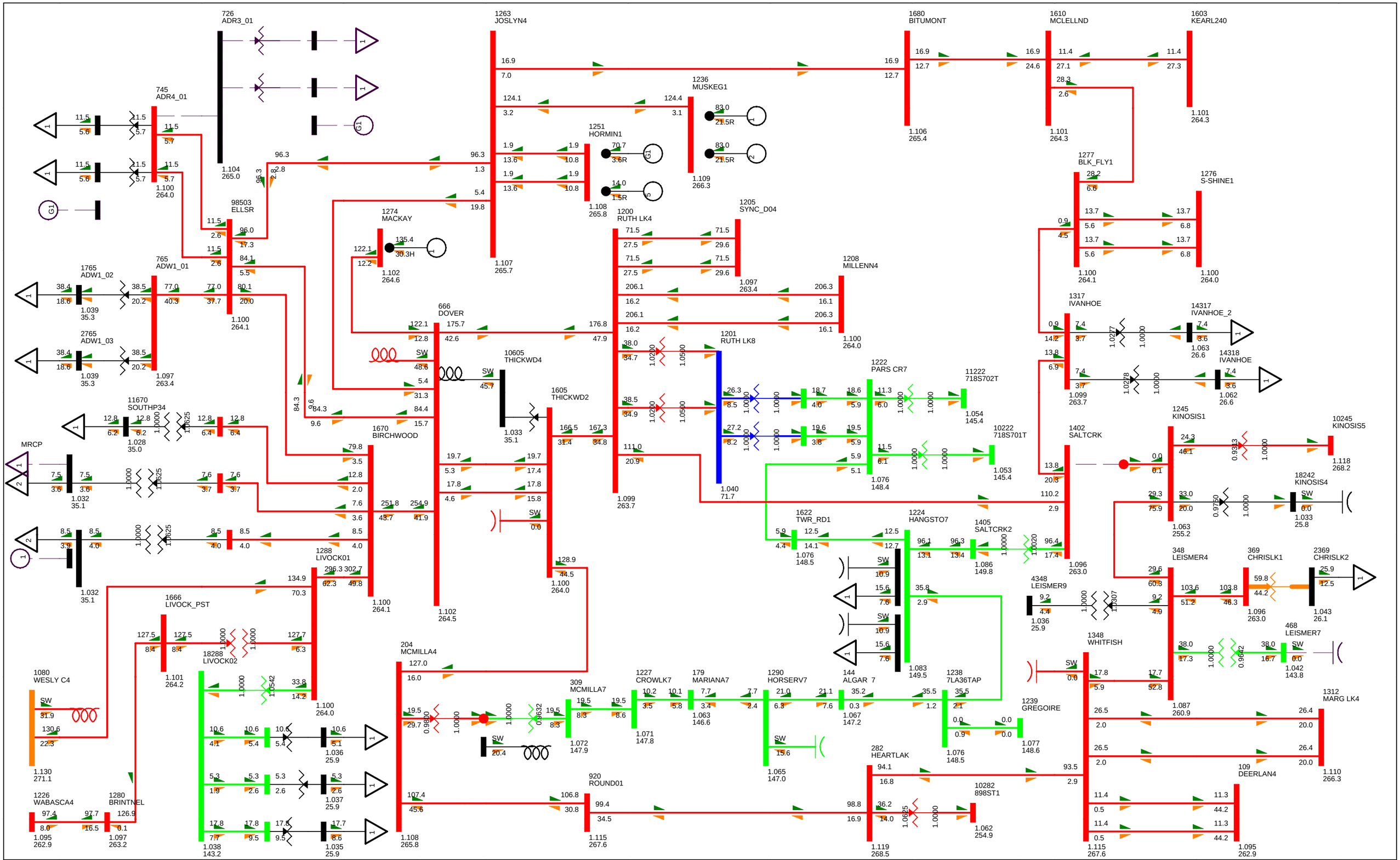

BC - Alberta (IMPORT)-50.2 MW

2015SL BASE CASE
SWINGBUS 1520 FOR FC-2009-5:2015-10-31:14:14--1--1-0-0
WED, JUL 27 2011 9:47

2015 NW FMM STUDY

Figure E-2015SL-13

Bus - VOLTAGE (kV/PU)
Branch - MW/Mvar
Equipment - MW/Mvar
100.0%RATEA
1.120OV 0.950UV
kV: <=34.500 <=69.000 <=138.000 <=240.000 <=500.000 >500.000

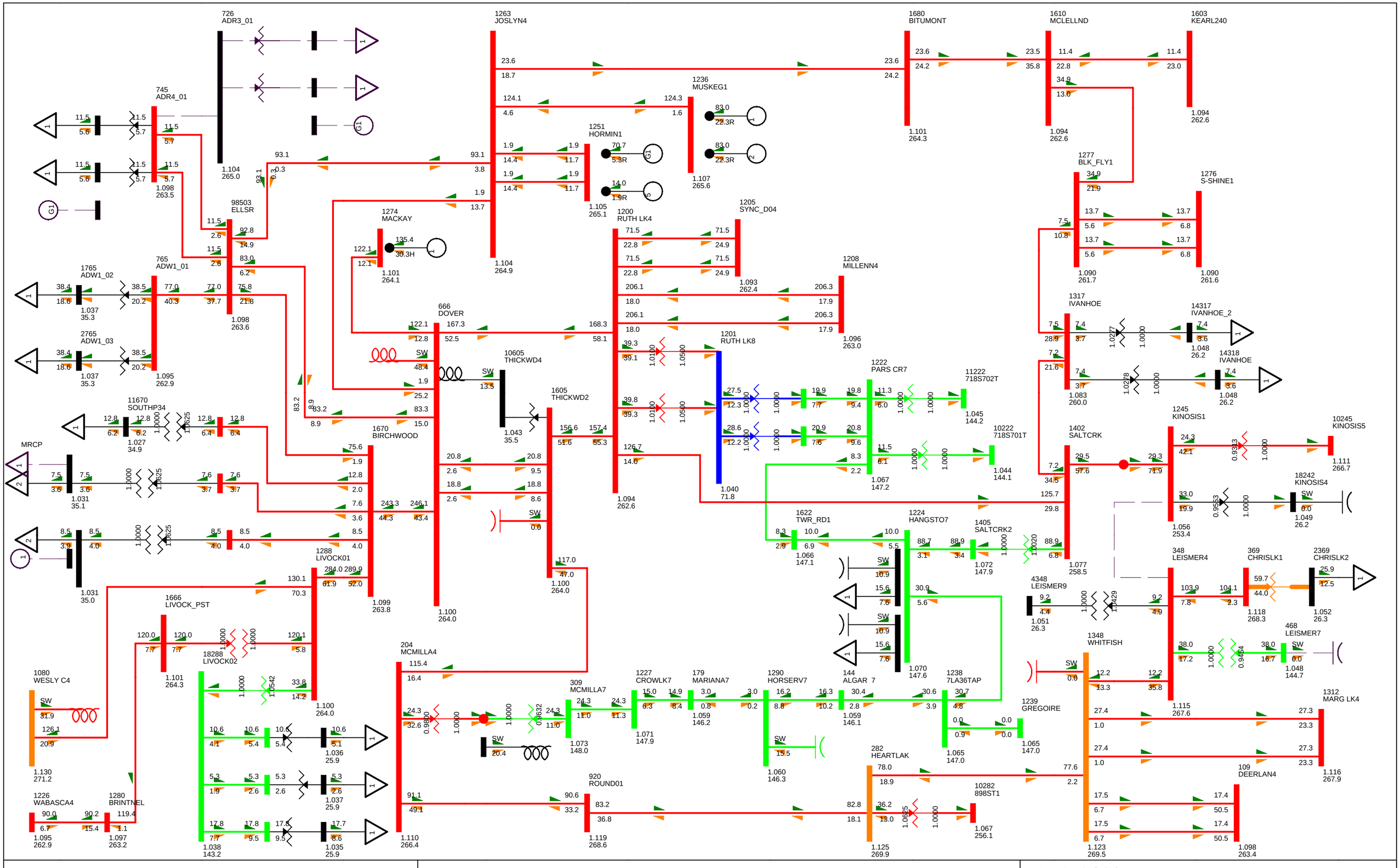

BC - Alberta (IMPORT)-51.8 MW

2015SL BASE CASE
SWINGBUS 1520 FOR FC-2009-5:2015-10-31:14:14--1--1-0-0
WED, JUL 27 2011 9:47

2015 NW FMM STUDY

Figure E-2015SL-14

Bus - VOLTAGE (kV/PU)
Branch - MW/Mvar
Equipment - MW/Mvar
100.0%RATEA
1.120OV 0.950UV
kV: <=34.500 <=69.000 <=138.000 <=240.000 <=500.000 >500.000

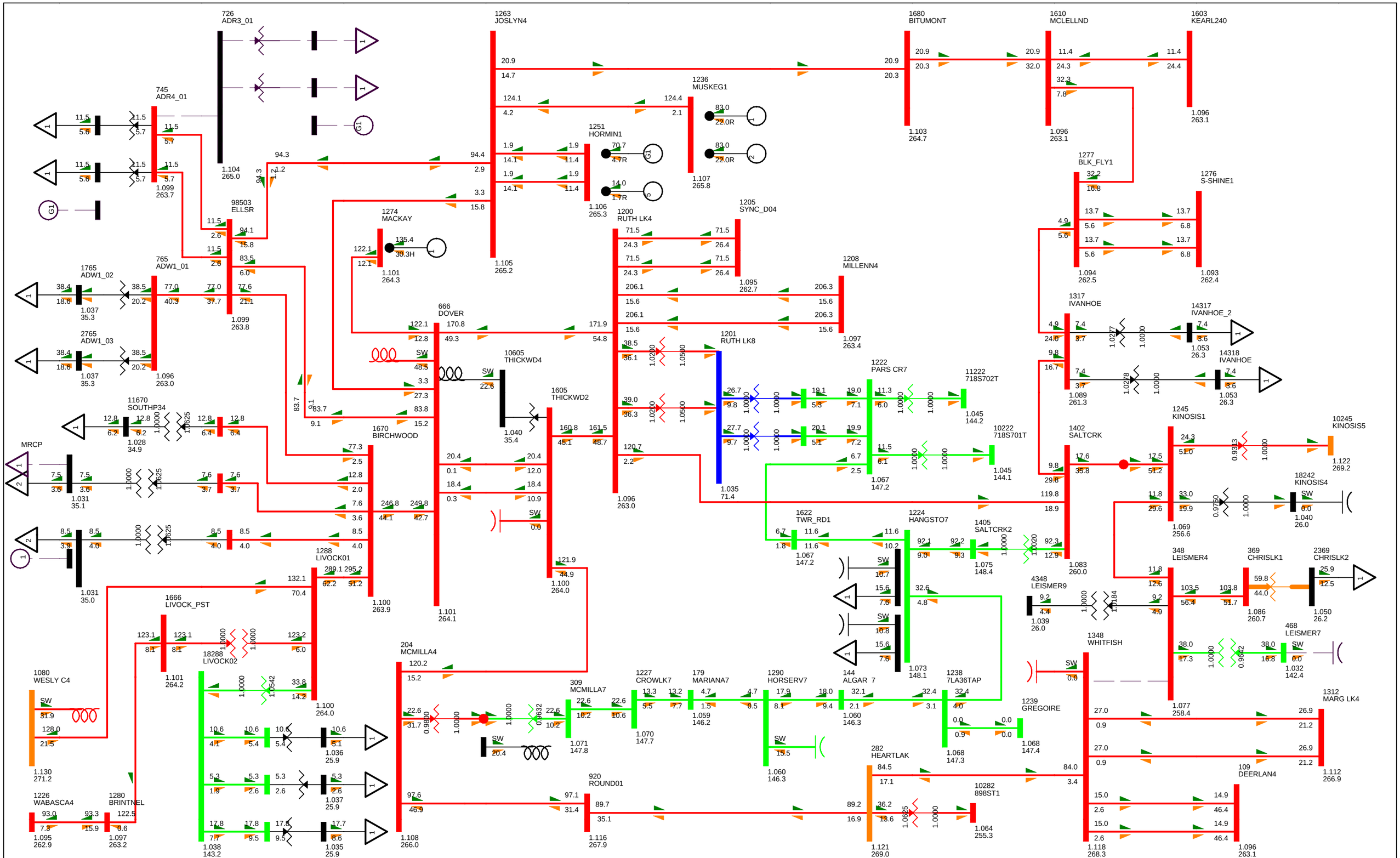

BC - Alberta (IMPORT)-51.2 MW

2015SL BASE CASE
SWINGBUS 1520 FOR FC-2009-5:2015-10-31:14:14--1--1-0-0
WED, JUL 27 2011 9:47

2015 NW FMM STUDY

Figure E-2015SL-15

Bus - VOLTAGE (kV/PU)
Branch - MW/Mvar
Equipment - MW/Mvar
100.0%RATEA
1.120OV 0.950UV
kV: <=34.500 <=69.000 <=138.000 <=240.000 <=500.000 >500.000

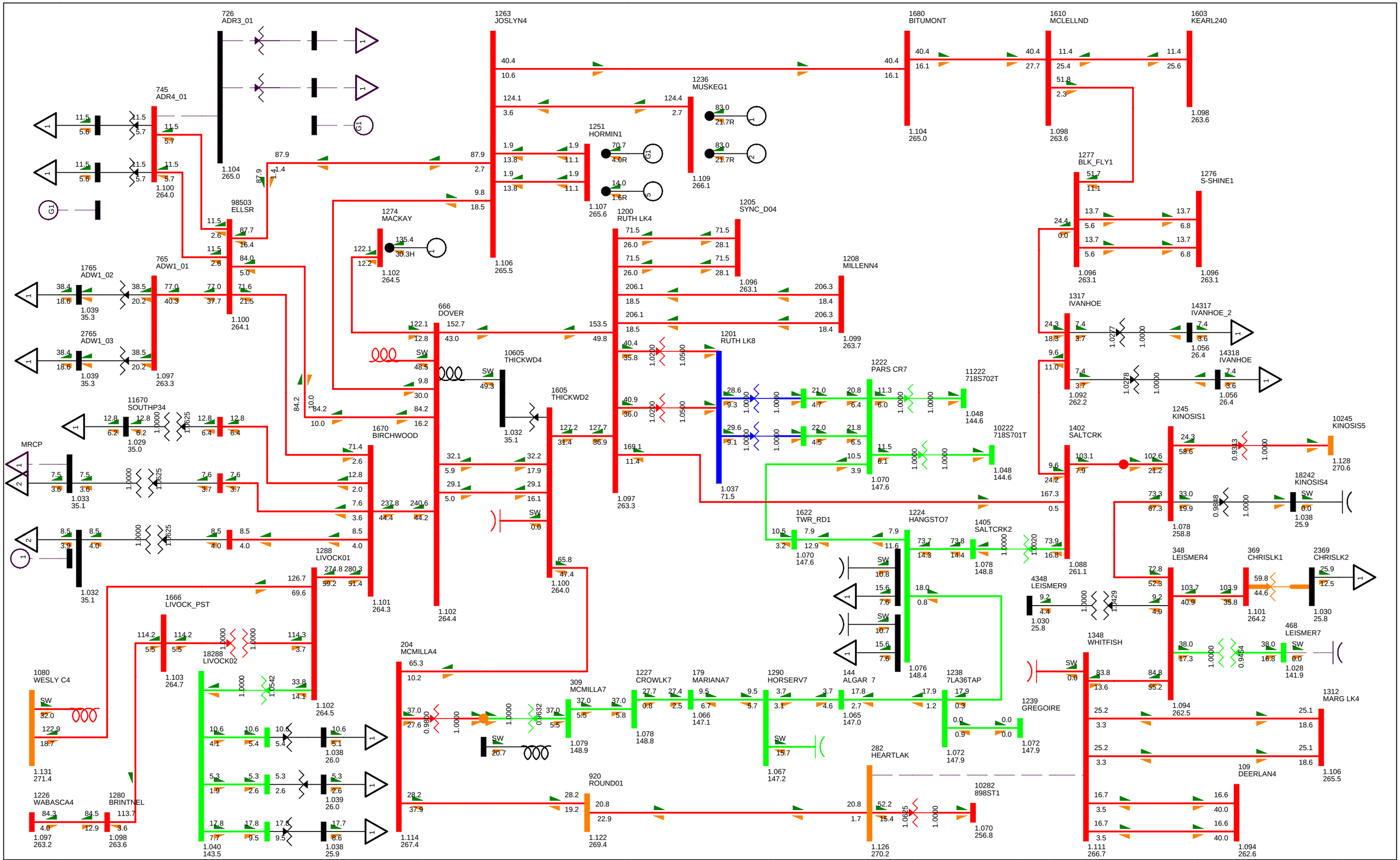

BC - Alberta (IMPORT)-51.5 MW

2015SL BASE CASE
SWINGBUS 1520 FOR FC-2009-5:2015-10-31:14:14--1--1-0-0
WED, JUL 27 2011 9:47

2015 NW FMM STUDY

Figure E-2015SL-16

Bus - VOLTAGE (kV/PU)
Branch - MW/Mvar
Equipment - MW/Mvar
100.0%RATEA
1.120OV 0.950UV
kV: <=34.500 <=69.000 <=138.000 <=240.000 <=500.000 >500.000

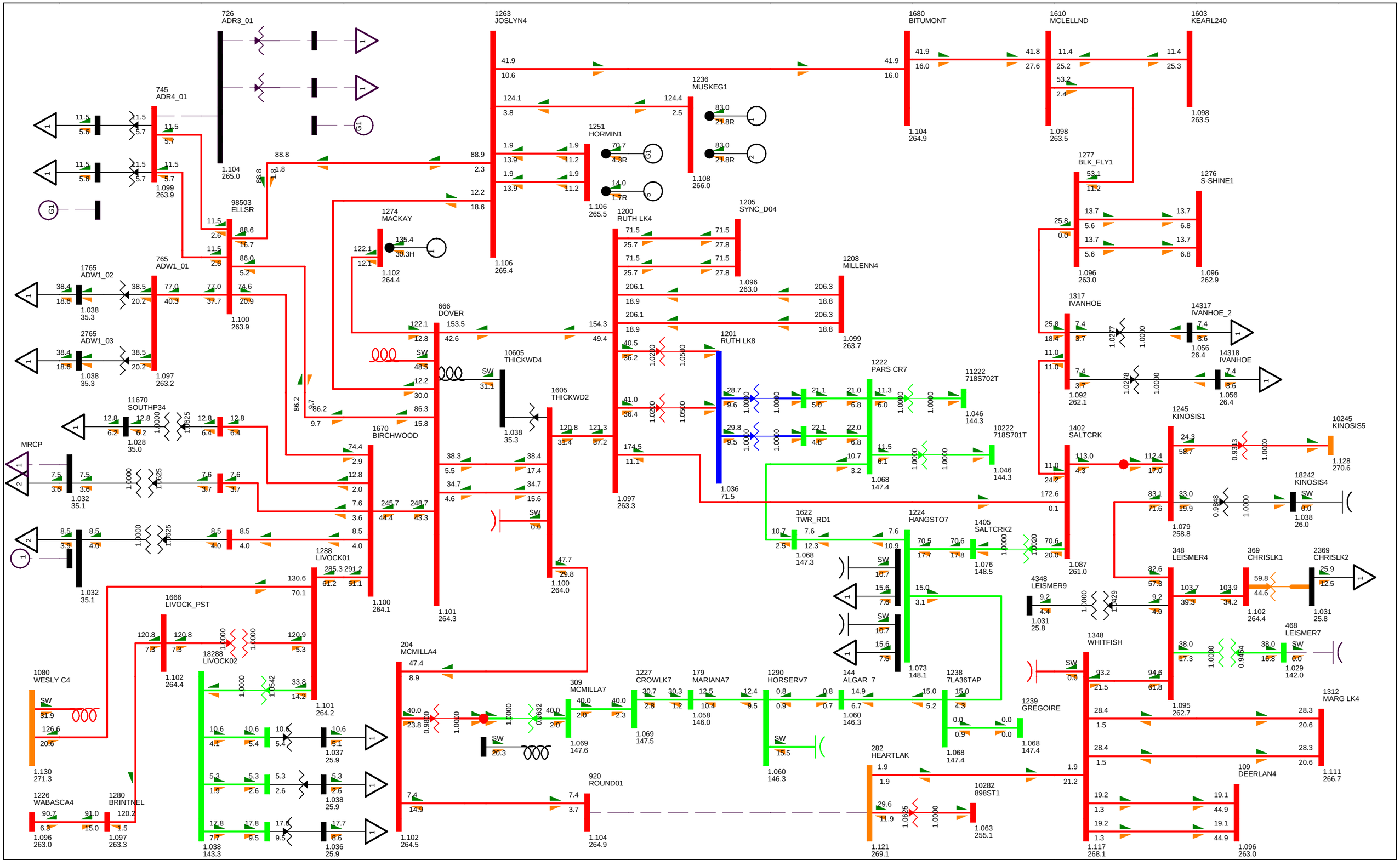

BC - Alberta (IMPORT)-51.9 MW

2015SL BASE CASE
SWINGBUS 1520 FOR FC-2009-5:2015-10-31:14:14--1--1-0-0
WED, JUL 27 2011 9:47

2015 NW FMM STUDY

Figure E-2015SL-17

Bus - VOLTAGE (kV/PU)
Branch - MW/Mvar
Equipment - MW/Mvar
100.0%RATEA
1.120OV 0.950UV
kV: <=34.500 <=69.000 <=138.000 <=240.000 <=500.000 >500.000

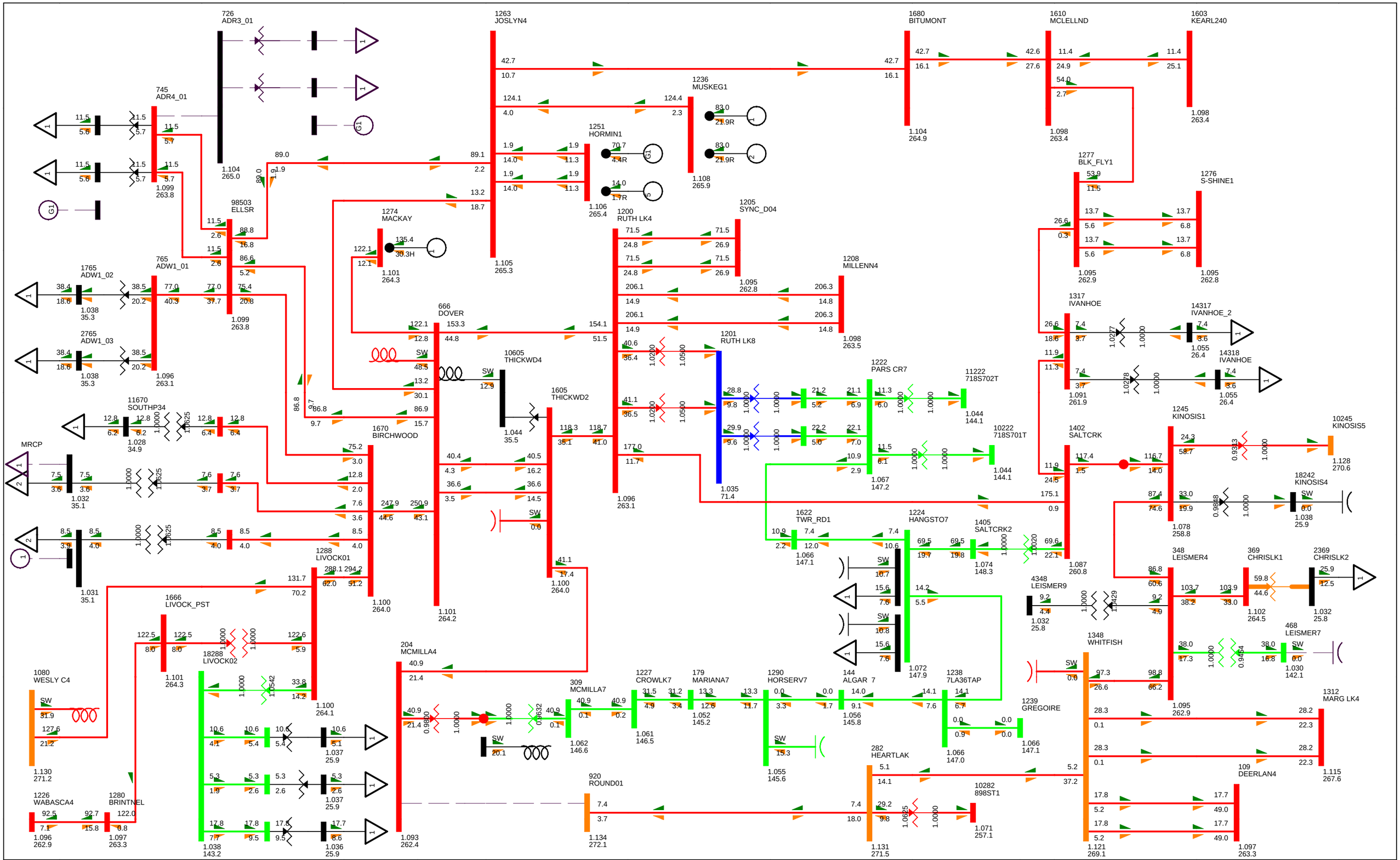

BC - Alberta (IMPORT)-51.6 MW

2015SL BASE CASE
SWINGBUS 1520 FOR FC-2009-5:2015-10-31:14:14--1--1-0-0
WED, JUL 27 2011 9:47

2015 NW FMM STUDY

Figure E-2015SL-18

Bus - VOLTAGE (kV/PU)
Branch - MW/Mvar
Equipment - MW/Mvar
100.0%RATEA
1.120OV 0.950UV
kV: <=34.500 <=69.000 <=138.000 <=240.000 <=500.000 >500.000

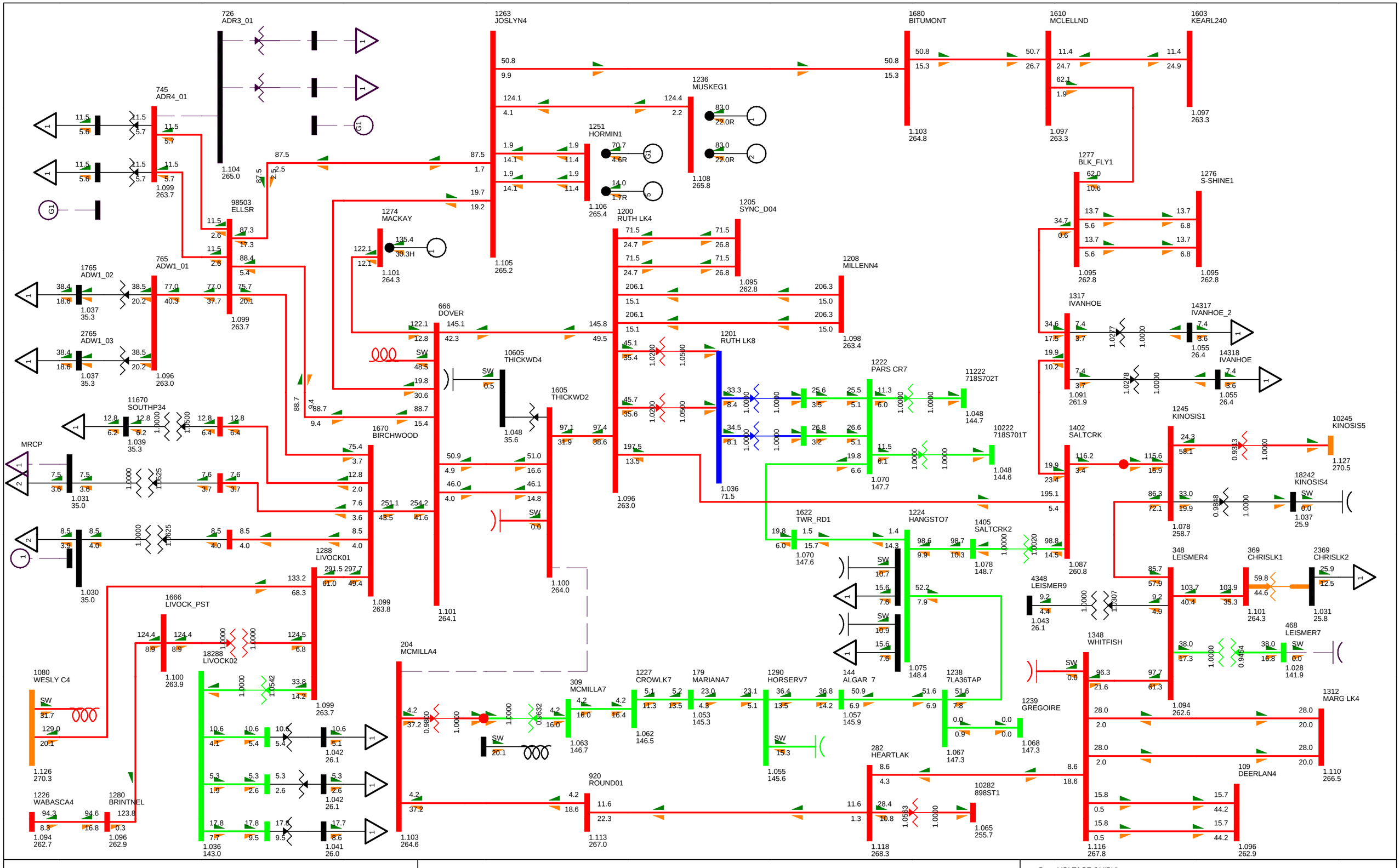

BC - Alberta (IMPORT)-49.9 MW

2015SL BASE CASE
SWINGBUS 1520 FOR FC-2009-5:2015-10-31:14:14--1--1-0-0
WED, JUL 27 2011 9:47

2015 NW FMM STUDY

Figure E-2015SL-19

Bus - VOLTAGE (kV/PU)
Branch - MW/Mvar
Equipment - MW/Mvar

100.0%RATEA
1.120OV 0.950UV
kV: <=34.500 <=69.000 <=138.000 <=240.000 <=500.000 >500.000

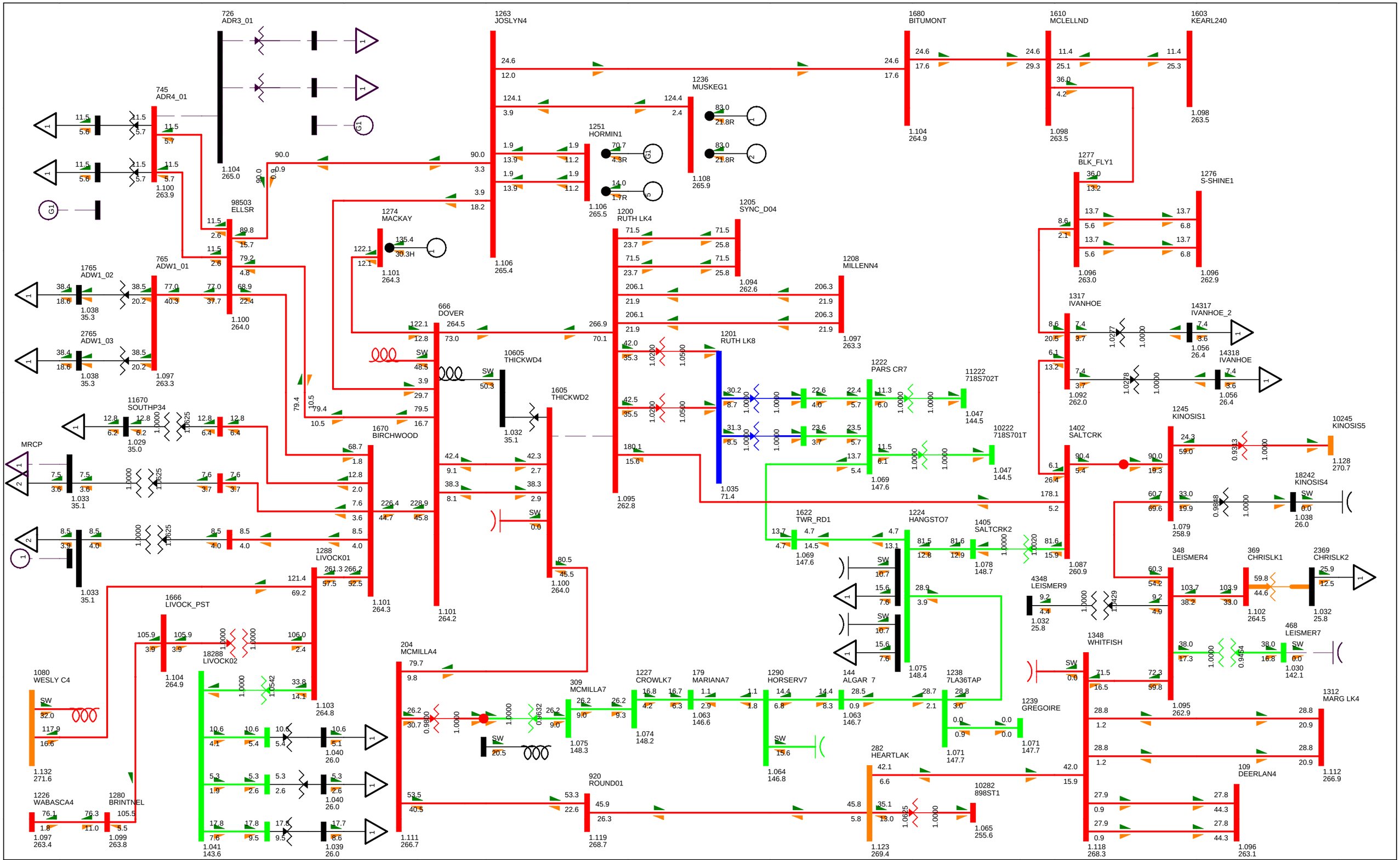

BC - Alberta (IMPORT)-51.2 MW

2015SL BASE CASE
SWINGBUS 1520 FOR FC-2009-5:2015-10-31:14:14--1--1-0-0
WED, JUL 27 2011 9:47

2015 NW FMM STUDY

Figure E-2015SL-20

Bus - VOLTAGE (kV/PU)
Branch - MW/Mvar
Equipment - MW/Mvar
100.0%RATEA
1.120OV 0.950UV
kV: <=34.500 <=69.000 <=138.000 <=240.000 <=500.000 >500.000

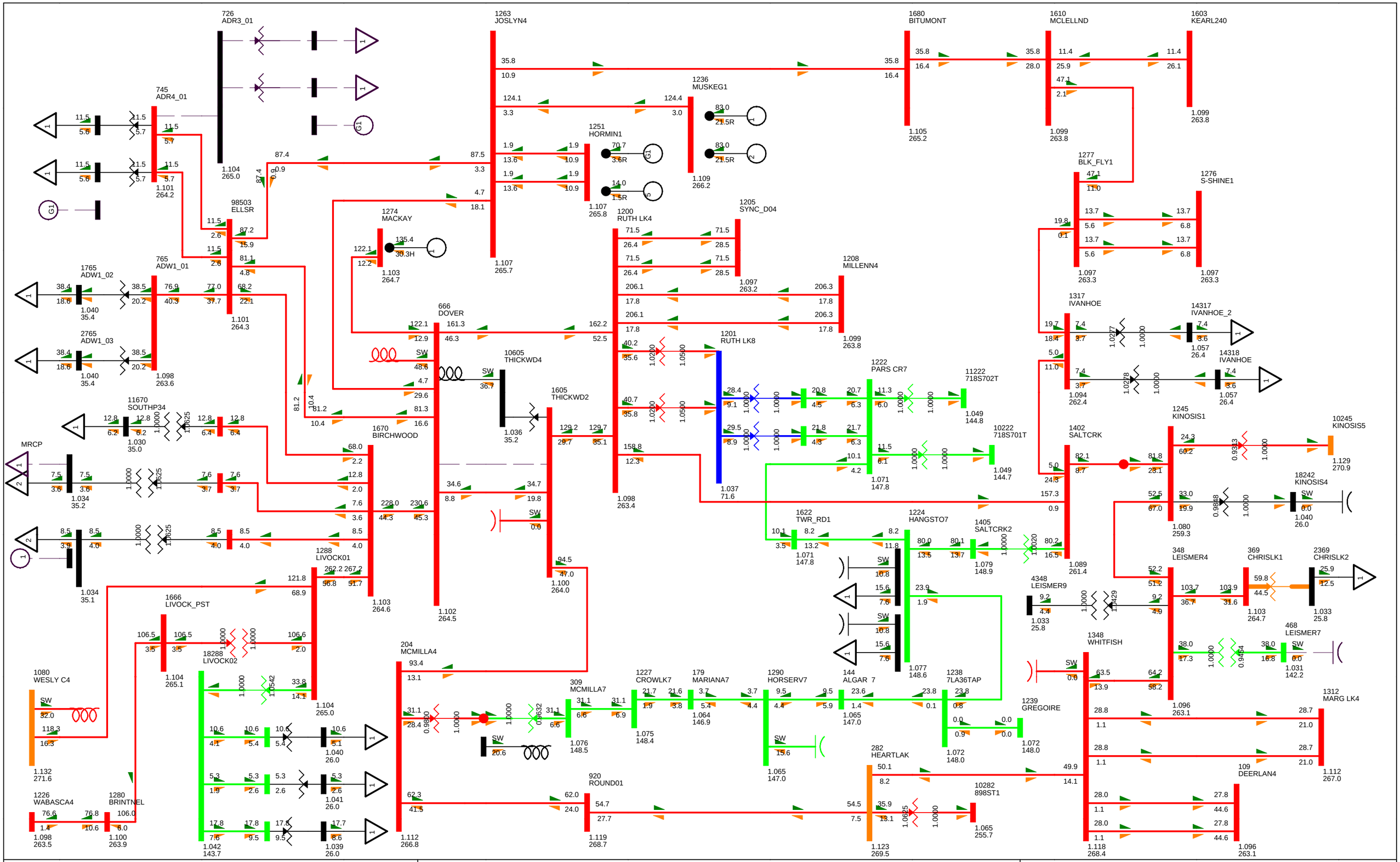

BC - Alberta (IMPORT)-52.8 MW

2015SL BASE CASE
SWINGBUS 1520 FOR FC-2009-5:2015-10-31:14:14--1--1-0-0
WED, JUL 27 2011 9:47

2015 NW FMM STUDY

Figure E-2015SL-21

Bus - VOLTAGE (kV/PU)
Branch - MW/Mvar
Equipment - MW/Mvar

100.0%RATEA
1.120OV 0.950UV
kV: <=34.500 <=69.000 <=138.000 <=240.000 <=500.000 >500.000

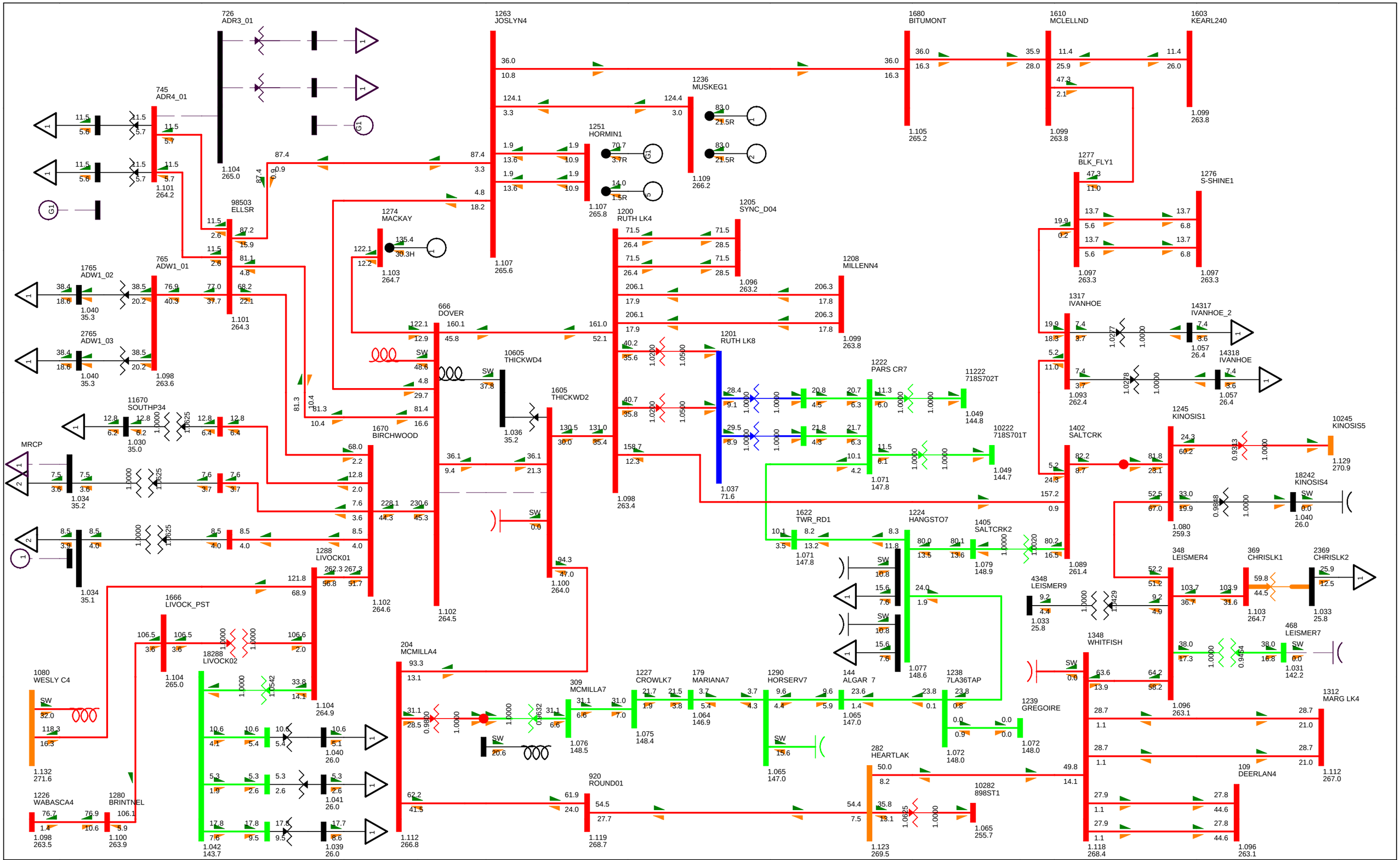

BC - Alberta (IMPORT)-52.8 MW

2015SL BASE CASE
SWINGBUS 1520 FOR FC-2009-5:2015-10-31:14:14--1--1-0-0
WED, JUL 27 2011 9:48

2015 NW FMM STUDY

Figure E-2015SL-22

Bus - VOLTAGE (kV/PU)
Branch - MW/Mvar
Equipment - MW/Mvar
100.0%RATEA
1.120OV 0.950UV
kV: <=34.500 <=69.000 <=138.000 <=240.000 <=500.000 >500.000

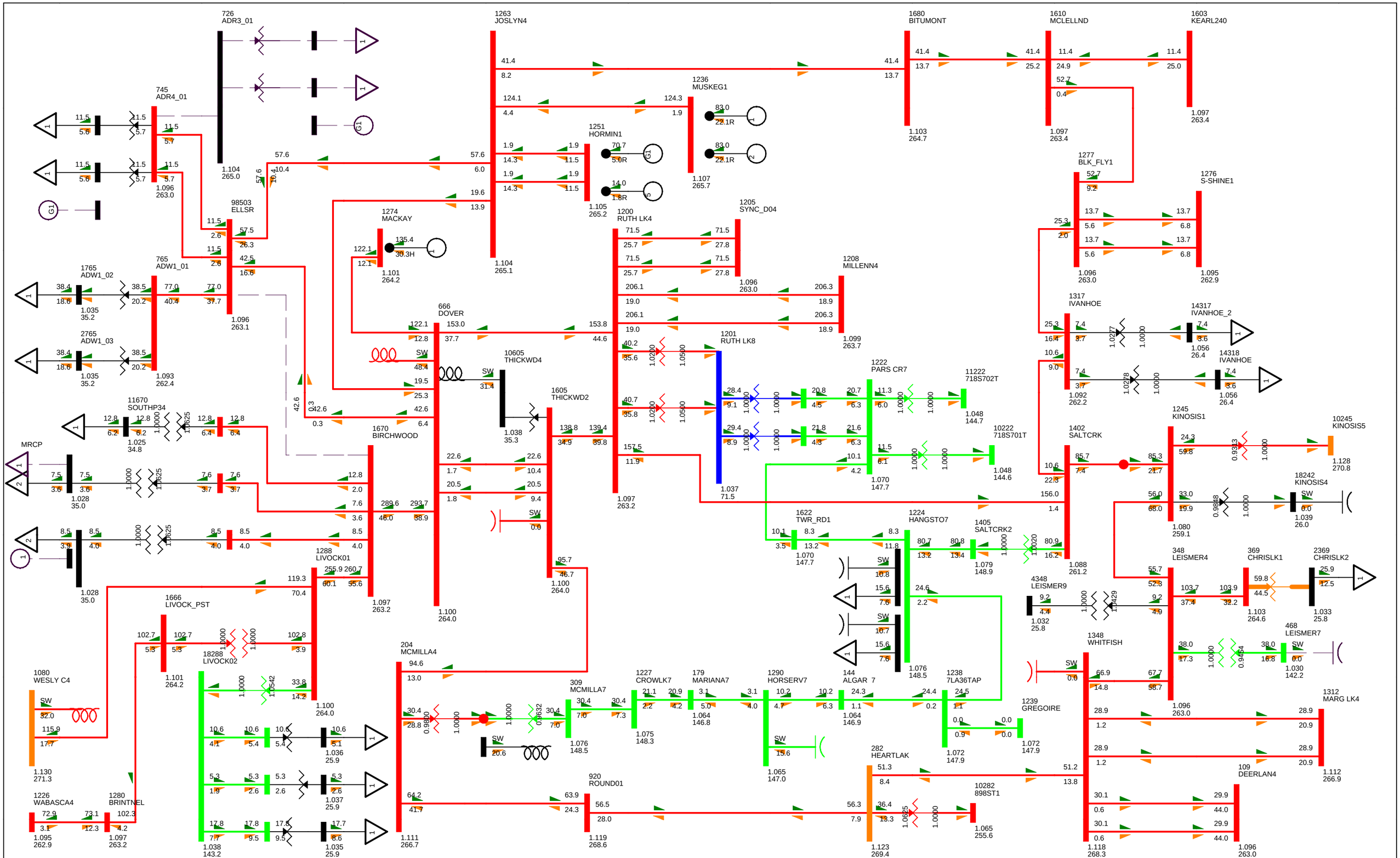

BC - Alberta (IMPORT)-51.5 MW

2015SL BASE CASE
SWINGBUS 1520 FOR FC-2009-5:2015-10-31:14:14--1--1-0-0
WED, JUL 27 2011 9:48

2015 NW FMM STUDY

Figure E-2015SL-23

Bus - VOLTAGE (kV/PU)
Branch - MW/Mvar
Equipment - MW/Mvar
100.0%RATEA
1.120OV 0.950UV
kV: <=34.500 <=69.000 <=138.000 <=240.000 <=500.000 >500.000

ATTACHMENT F
Near Term PV Analysis

Table F-1: P-V Analysis Summary – 2013 Summer Peak

Figure Number	System Normal and Category B Contingencies	Forecasted 2013 Summer Peak (MW)	105% Margin (MW)	Nose Point (MW)
Figure F1-2013SP-1	Normal operation condition	1643	1725	2053
Figure F1-2013SP-2	240 kV 9L10 Brintnell 876S to Livock 939S	1643	1725	1943
Figure F1-2013SP-3	240 kV 9L57 Livock 939S to Birchwood 960S	1643	1725	1963
Figure F1-2013SP-4	240 kV 9L94 Dover 666S to Birchwood 960S	1643	1725	2043
Figure F1-2013SP-5	240 kV 9L960 Whitefish 825S to DeerLand 13S	1643	1725	1983
Figure F1-2013SP-6	240 kV 971L Conklin 762S to Sunday Creek	1643	1725	1973
	Category C5 Contingencies	**Forecasted 2013 Summer Peak (MW)**	**102.5% Margin (MW)**	**Maximum Operating Limit (MW)**
Figure F1-2013SP-7	9L08 9L09, Dover 888S to Ells River 2079S and Joslyn 849S Double Circuit 240 kV Lines	1643	1684	2033
Figure F1-2013SP-8	9L76 9L09, Joslyn 849S to Ells River 2079S and Dover 888S Double Circuit 240 kV Lines	1643	1684	2003
Figure F1-2013SP-9	9L01 9L58, Dover 888S to Ruth Lake 848S Double Circuit 240 kV Lines	1643	1684	2043

2012WP BASE CASE
SWINGBUS 1520 FOR FC-2009-5:2013-04-30:19:24--1--1-0-0
MON, AUG 08 2011 10:45

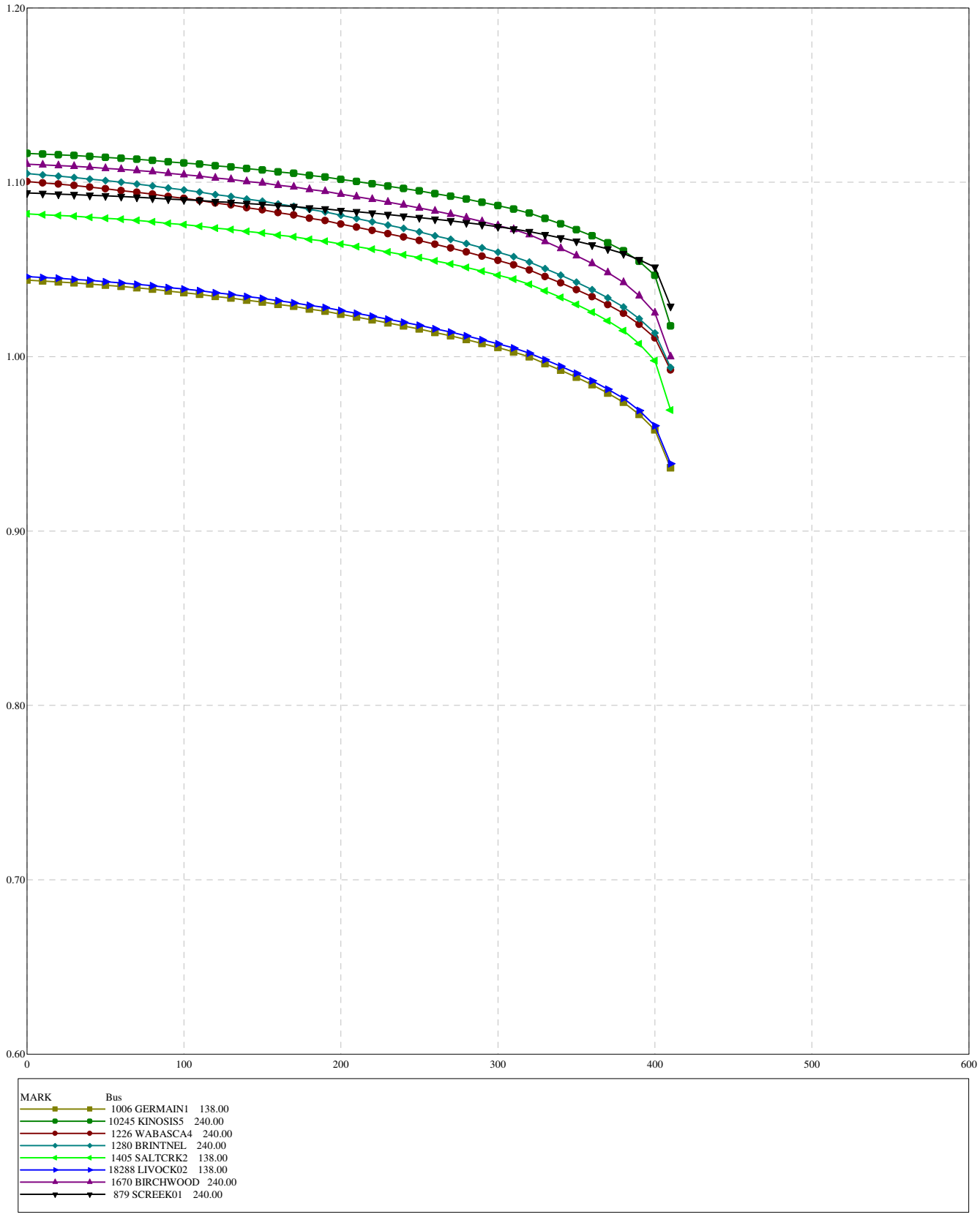

Figure F1-2013SP-1

2012WP BASE CASE
SWINGBUS 1520 FOR FC-2009-5:2013-04-30:19:24--1--1-0-0
MON, AUG 08 2011 10:50

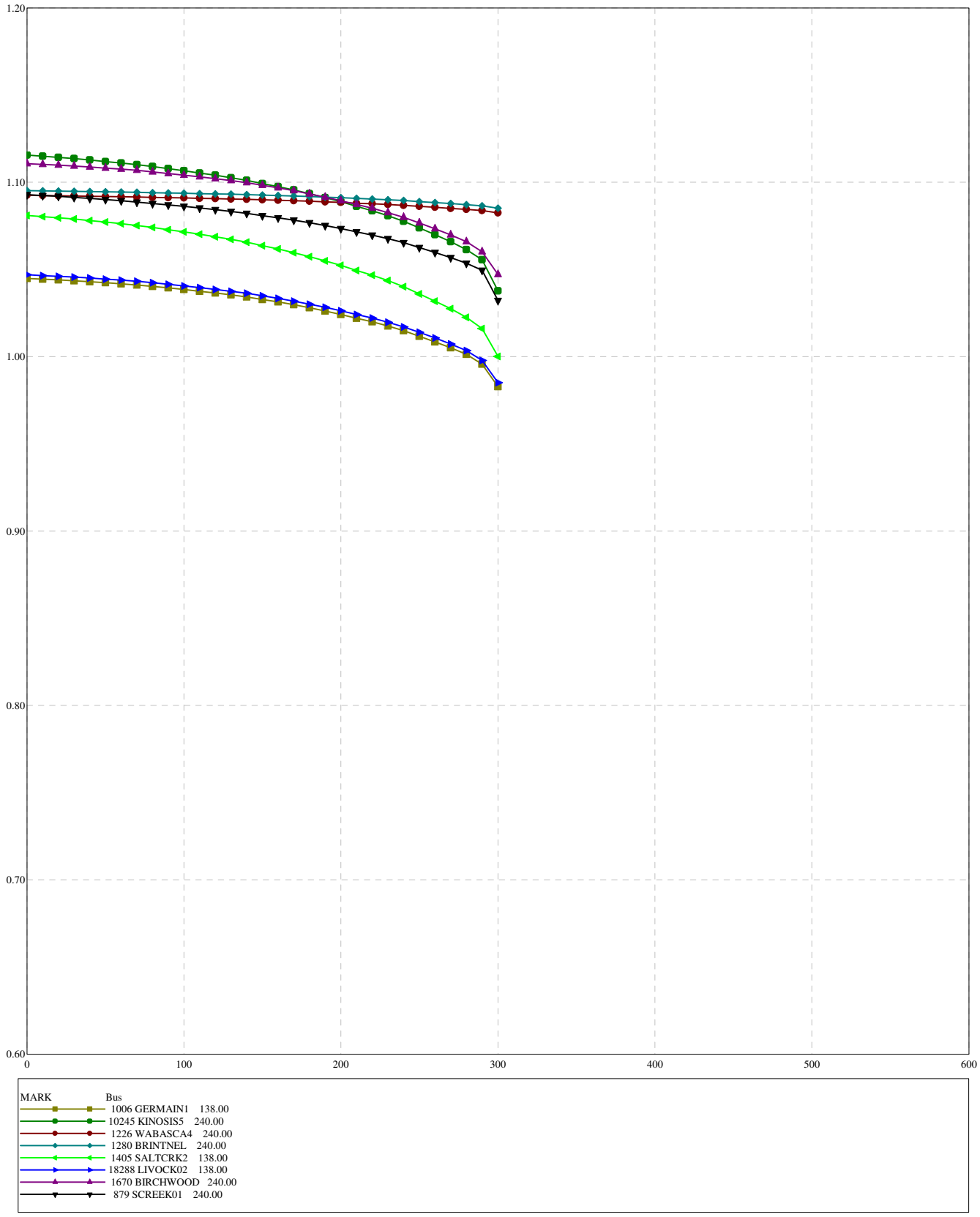

Figure F1-2013SP-2

2012WP BASE CASE
SWINGBUS 1520 FOR FC-2009-5:2013-04-30:19:24--1--1-0-0
MON, AUG 08 2011 11:18

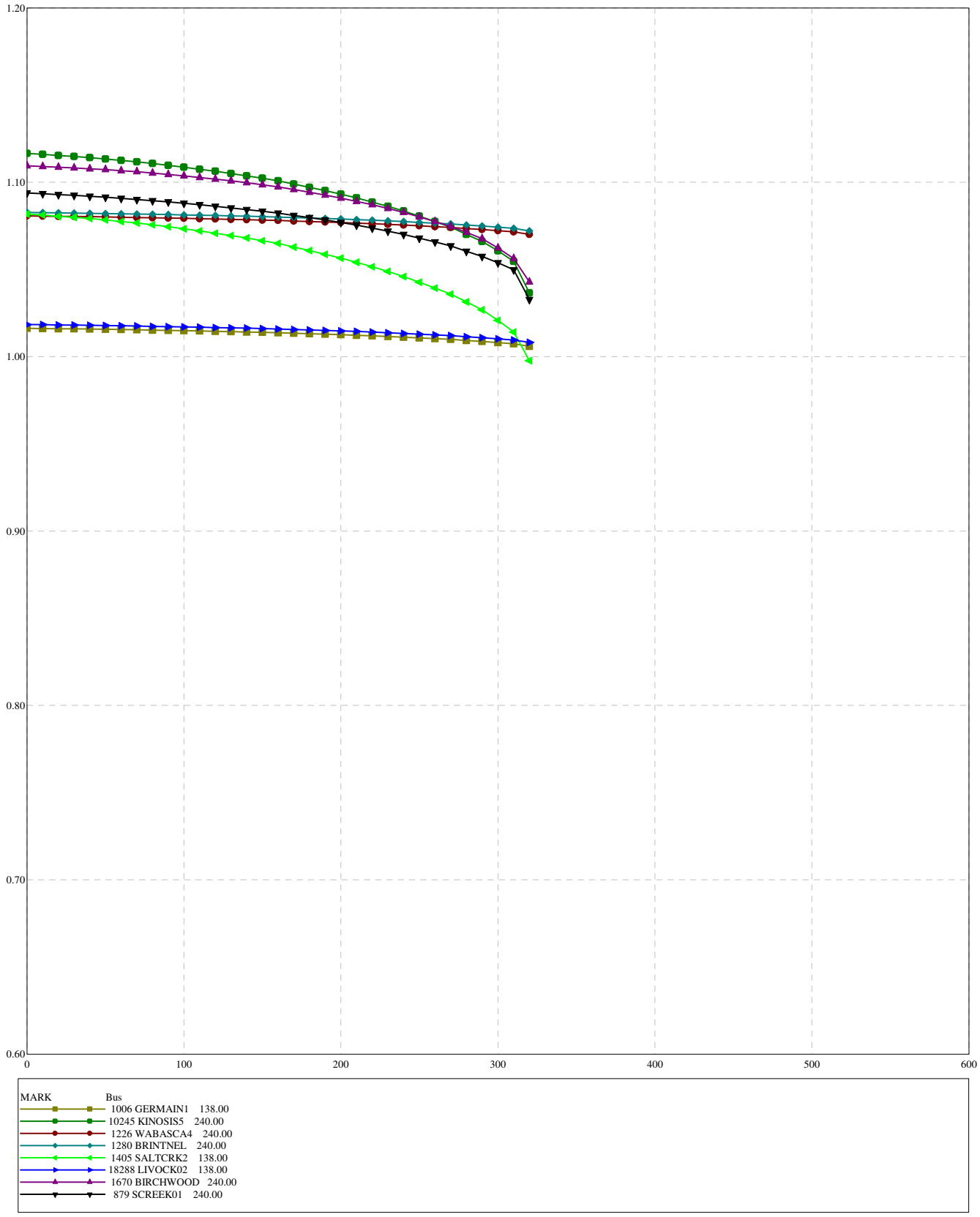

Figure F1-2013SP-3

2012WP BASE CASE
SWINGBUS 1520 FOR FC-2009-5:2013-04-30:19:24--1--1-0-0
MON, AUG 08 2011 11:26

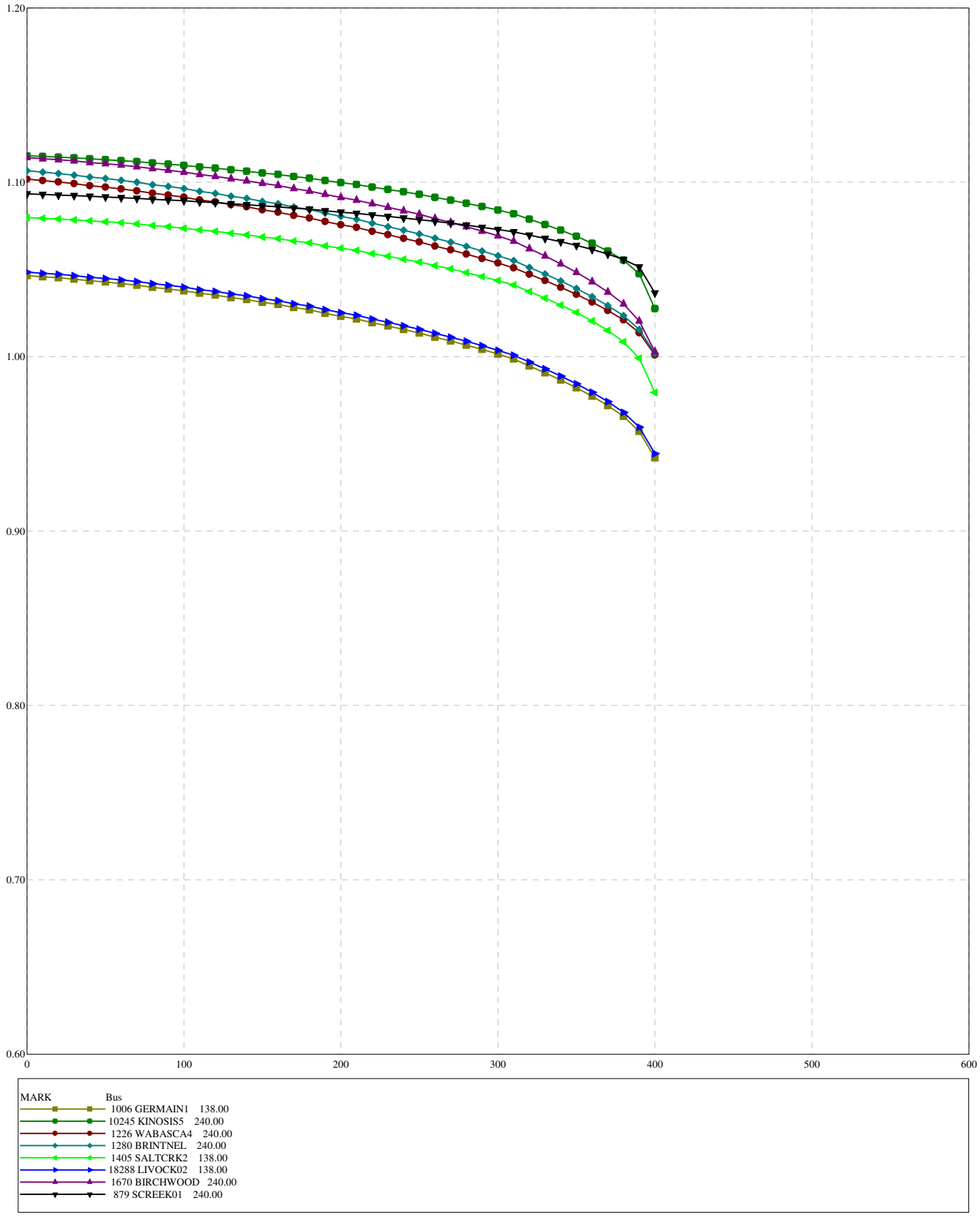

Figure F1-2013SP-4

2012WP BASE CASE
SWINGBUS 1520 FOR FC-2009-5:2013-04-30:19:24--1--1-0-0
MON, AUG 08 2011 11:24

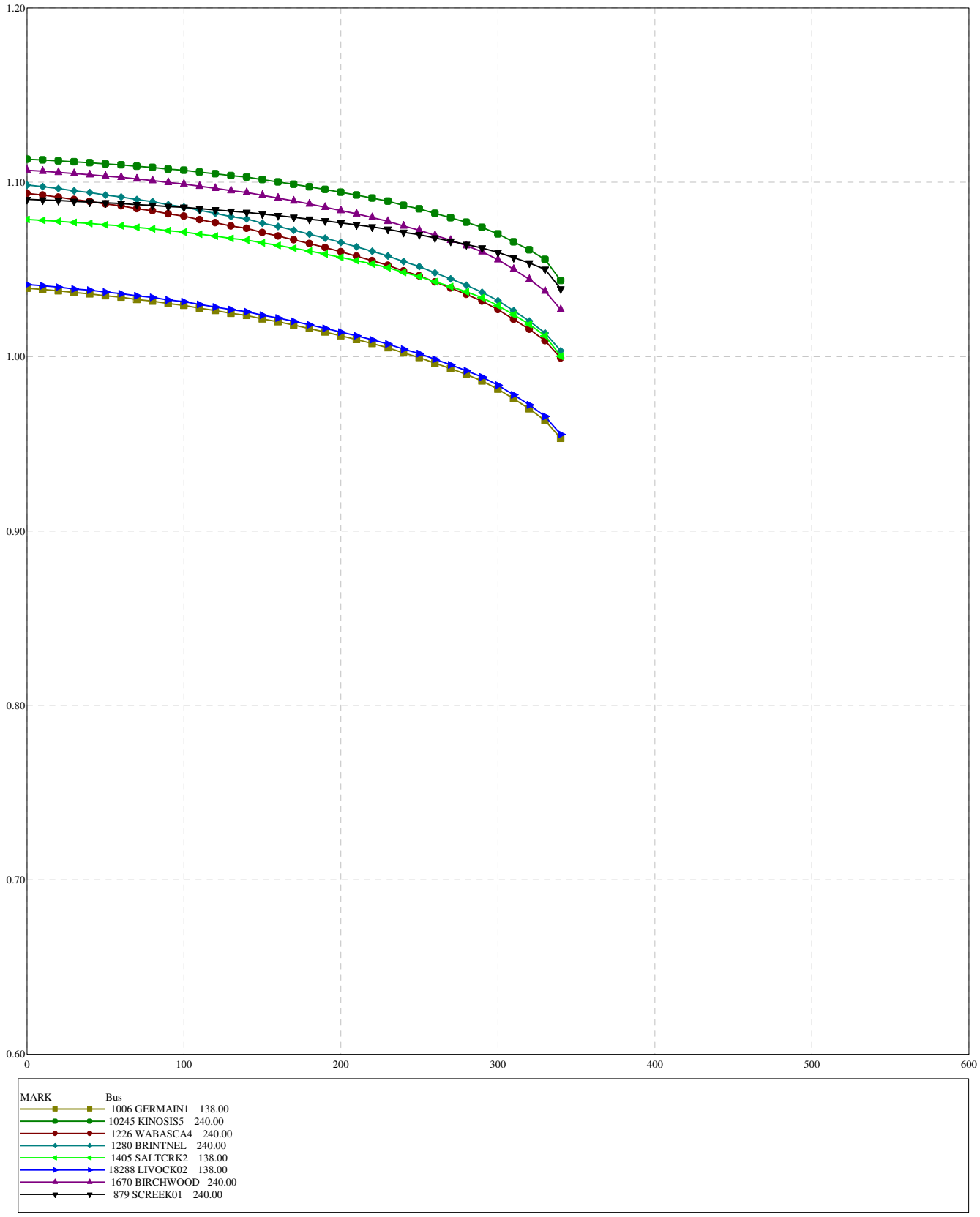

Figure F1-2013SP-5

2012WP BASE CASE
SWINGBUS 1520 FOR FC-2009-5:2013-04-30:19:24--1--1-0-0
MON, AUG 08 2011 11:24

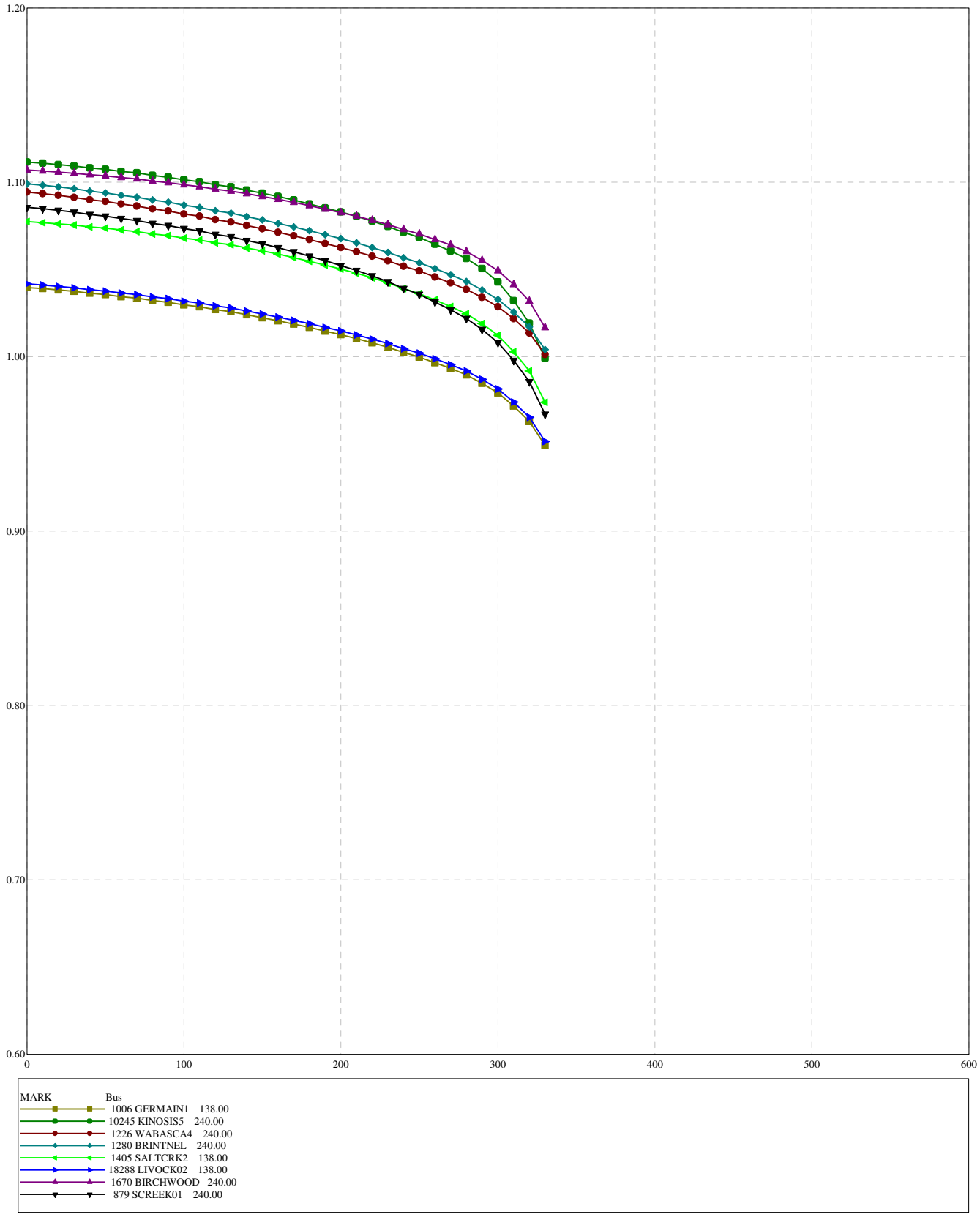

Figure F1-2013SP-6

2012WP BASE CASE
SWINGBUS 1520 FOR FC-2009-5:2013-04-30:19:24--1--1-0-0
MON, AUG 08 2011 10:46

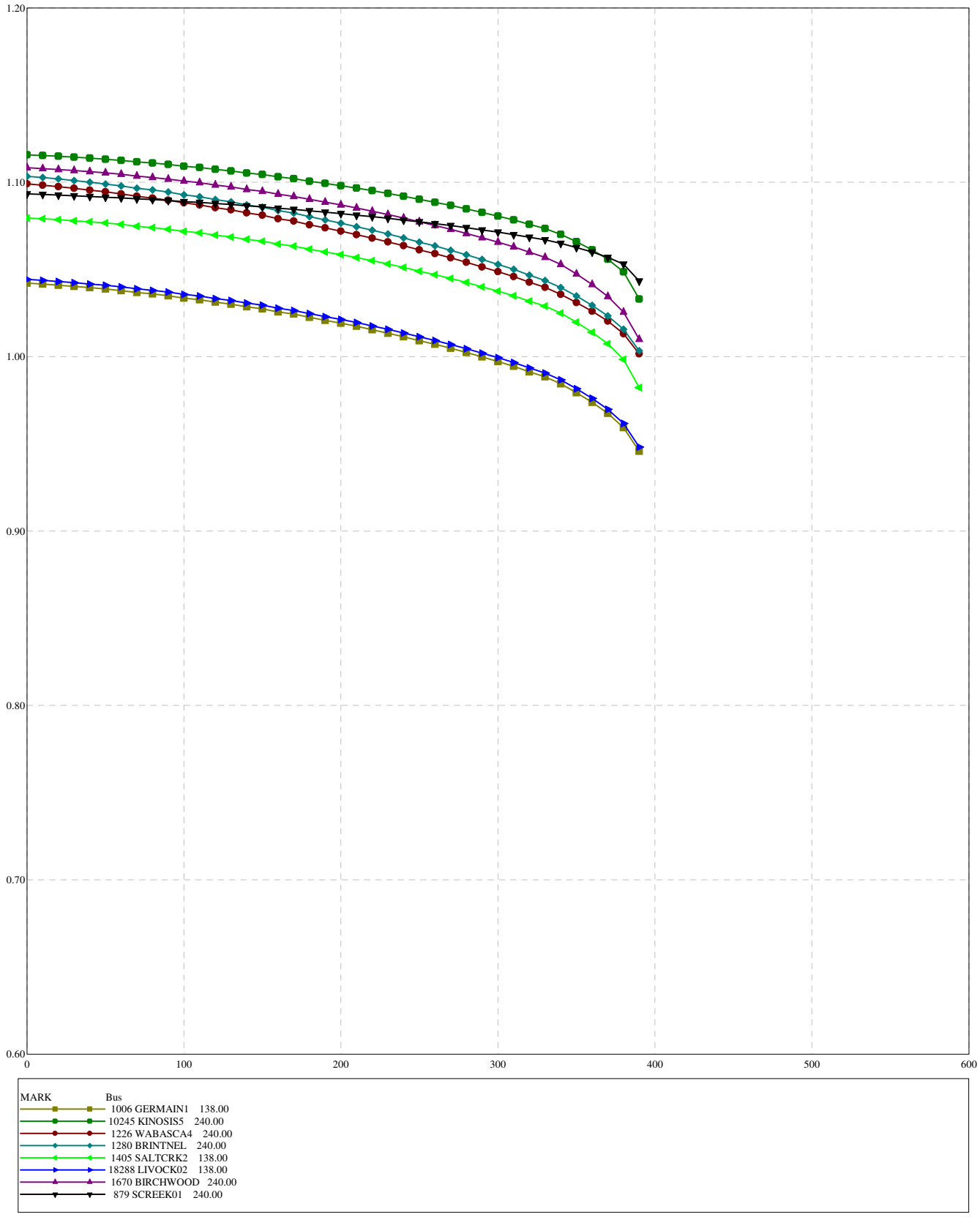

Figure F1-2013SP-7

2012WP BASE CASE
SWINGBUS 1520 FOR FC-2009-5:2013-04-30:19:24--1--1-0-0
MON, AUG 08 2011 10:46

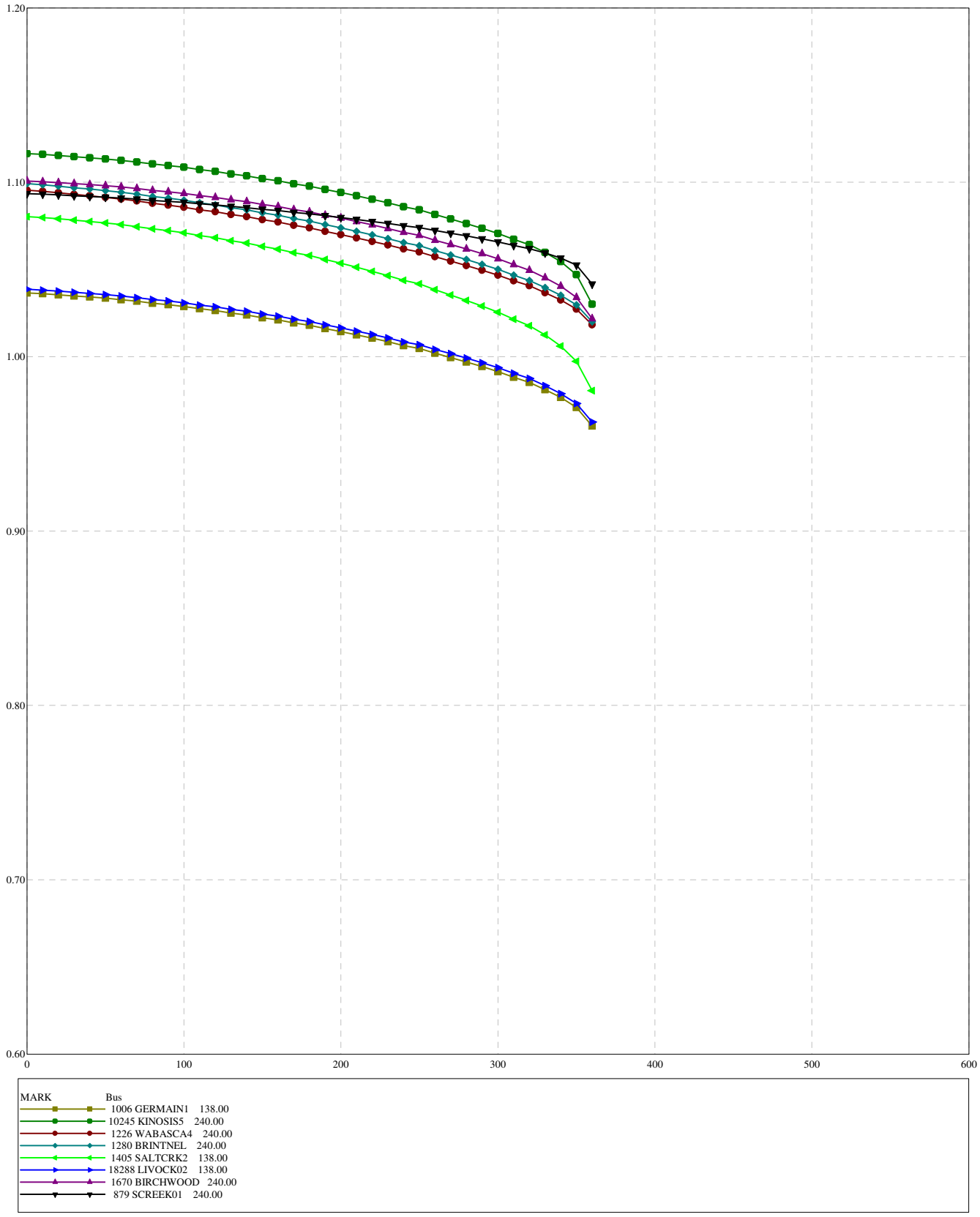

Figure F1-2013SP-8

2012WP BASE CASE
SWINGBUS 1520 FOR FC-2009-5:2013-04-30:19:24--1--1-0-0
MON, AUG 08 2011 10:45

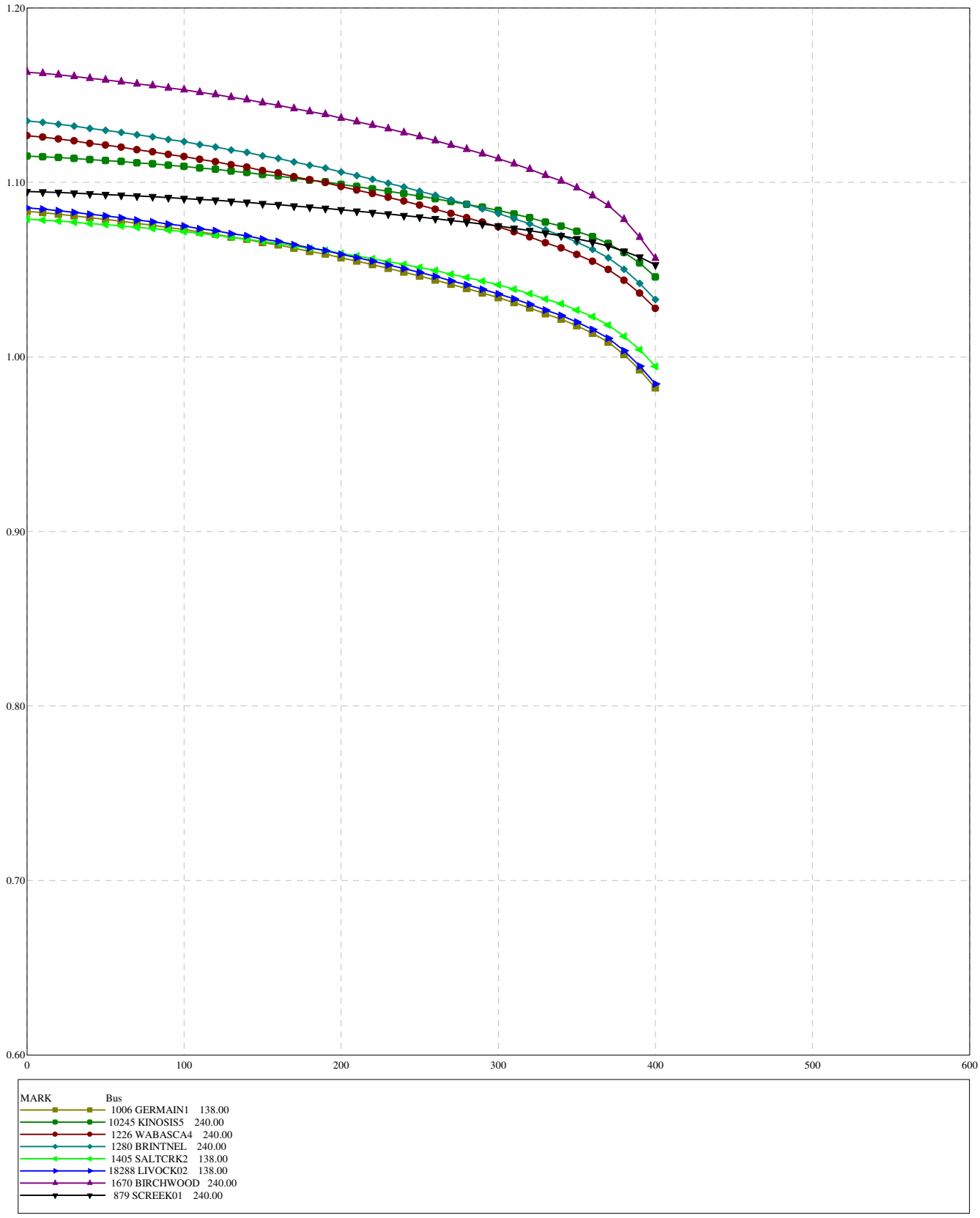

Figure F1-2013SP-9

Table F-2: P-V Analysis Summary – 2013 Winter Peak

Figure Number	System Normal and Category B Contingencies	Forecasted 2013 Winter Peak (MW)	105% Margin (MW)	Nose Point (MW)
Figure F2-2013WP-1	Normal operation condition	1811	1902	2091
Figure F2-2013WP-2	240 kV 9L10 Brintnell 876S to Livock 939S	1811	1902	1931
Figure F2-2013WP-3	240 kV 9L57 Livock 939S to Birchwood 960S	1811	1902	1961
Figure F2-2013WP-4	240 kV 9L94 Dover 666S to Birchwood 960S	1811	1902	1971
Figure F2-2013WP-5	240 kV 9L960 Whitefish 825S to DeerLand 13S	1811	1902	1971
Figure F2-2013WP-6	240 kV 971L Conklin 762S to Sunday Creek	1811	1902	1991
	Category C5 Contingencies	**Forecasted 2013 Winter Peak (MW)**	**102.5% Margin (MW)**	**Maximum Operating Limit (MW)**
Figure F2-2013WP-7	9L08 9L09, Dover 888S to Ells River 2079S and Joslyn 849S Double Circuit 240 kV Lines	1811	1856	2041
Figure F2-2013WP-8	9L76 9L09, Joslyn 849S to Ells River 2079S and Dover 888S Double Circuit 240 kV Lines	1811	1856	2061
Figure F2-2013WP-9	9L01 9L58, Dover 888S to Ruth Lake 848S Double Circuit 240 kV Lines	1811	1856	2091

2012WP BASE CASE
SWINGBUS 1520 FOR FC-2009-5:2013-04-30:19:24--1--1-0-0
FRI, JUN 24 2011 9:27

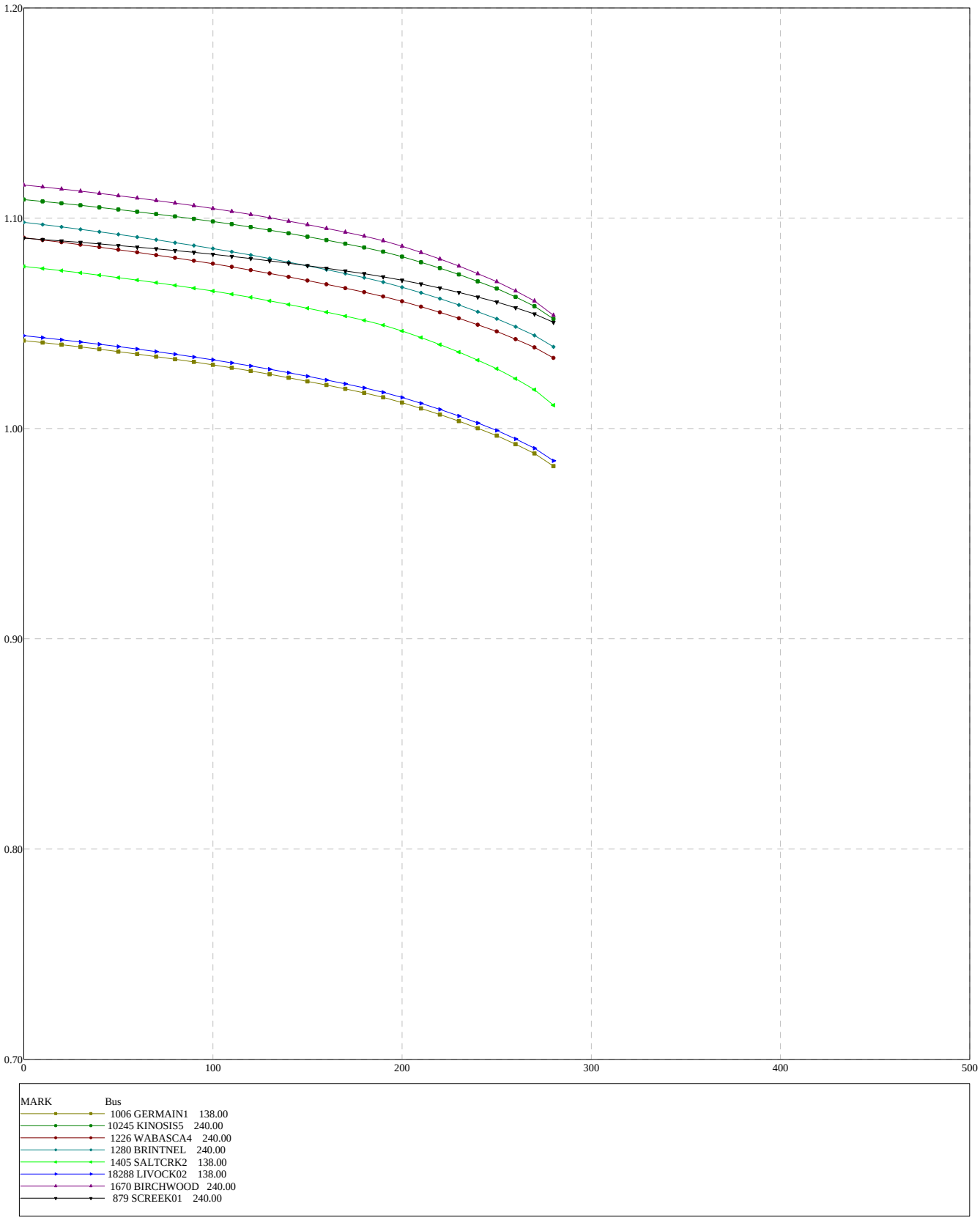

Figure F2-2013WP-1

2012WP BASE CASE
SWINGBUS 1520 FOR FC-2009-5:2013-04-30:19:24--1--1-0-0
FRI, JUN 24 2011 9:31

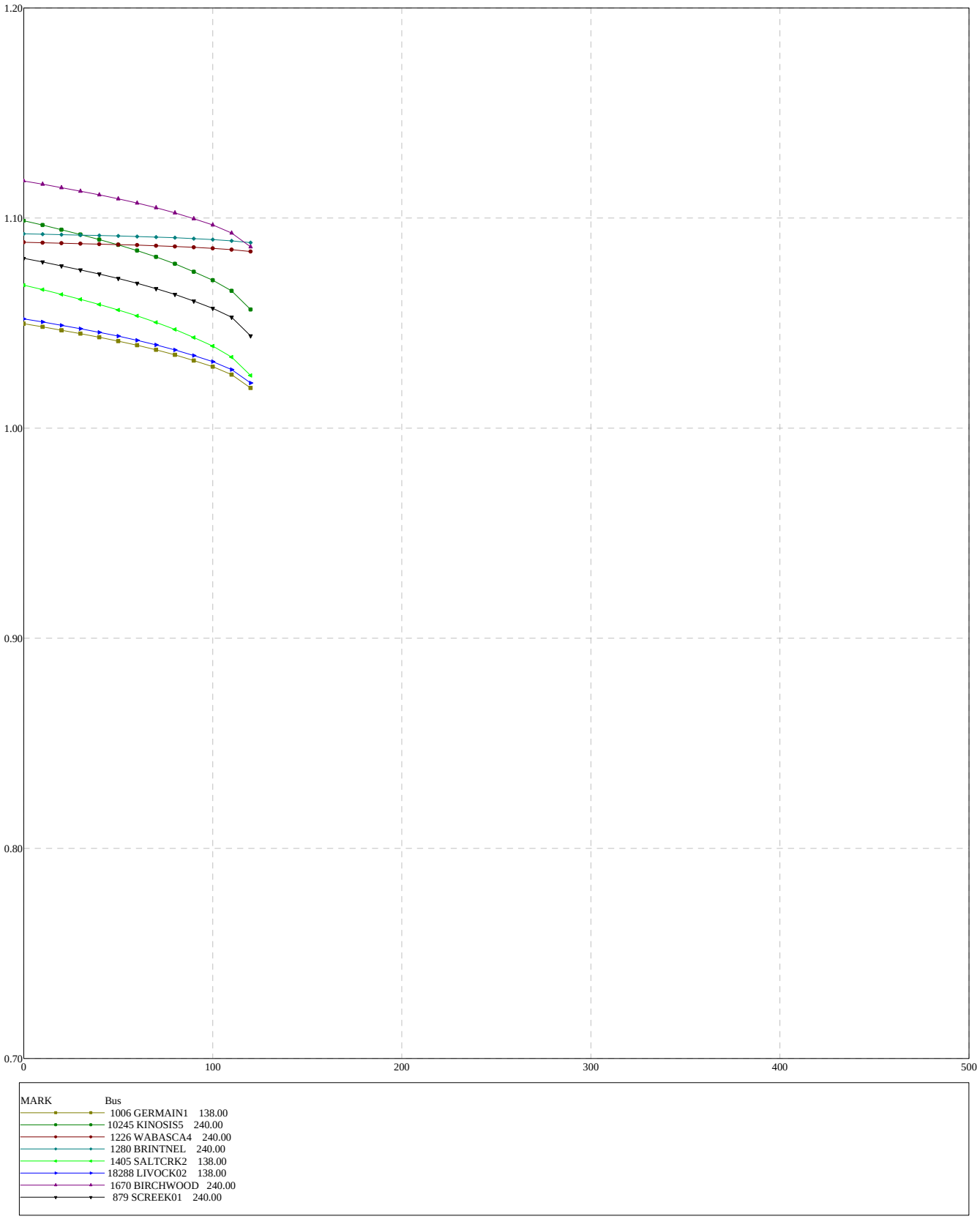

Figure F2-2013WP-2

2012WP BASE CASE
SWINGBUS 1520 FOR FC-2009-5:2013-04-30:19:24--1--1-0-0
FRI, JUN 24 2011 9:32

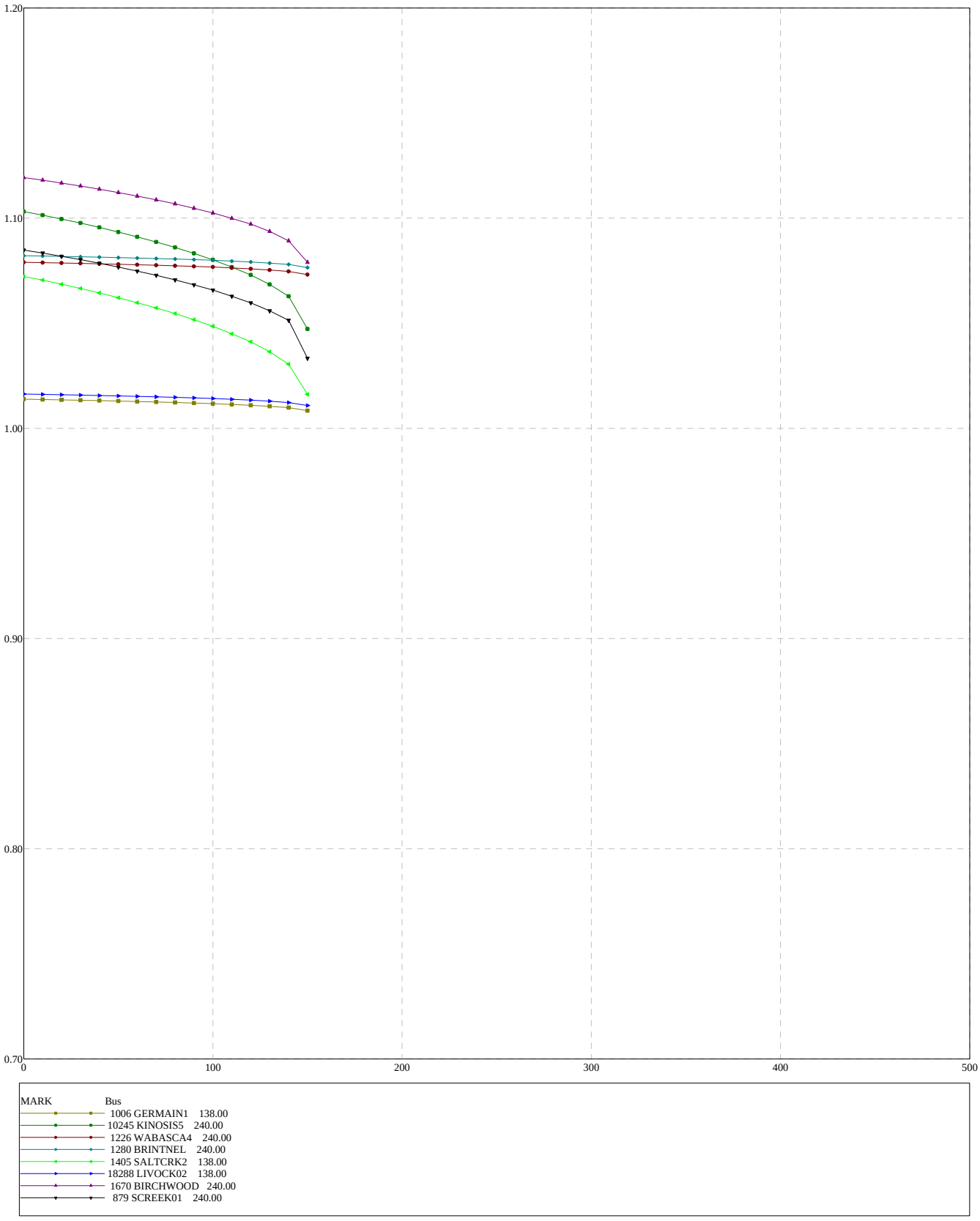

Figure F2-2013WP-3

2012WP BASE CASE
SWINGBUS 1520 FOR FC-2009-5:2013-04-30:19:24--1--1-0-0
FRI, JUN 24 2011 9:33

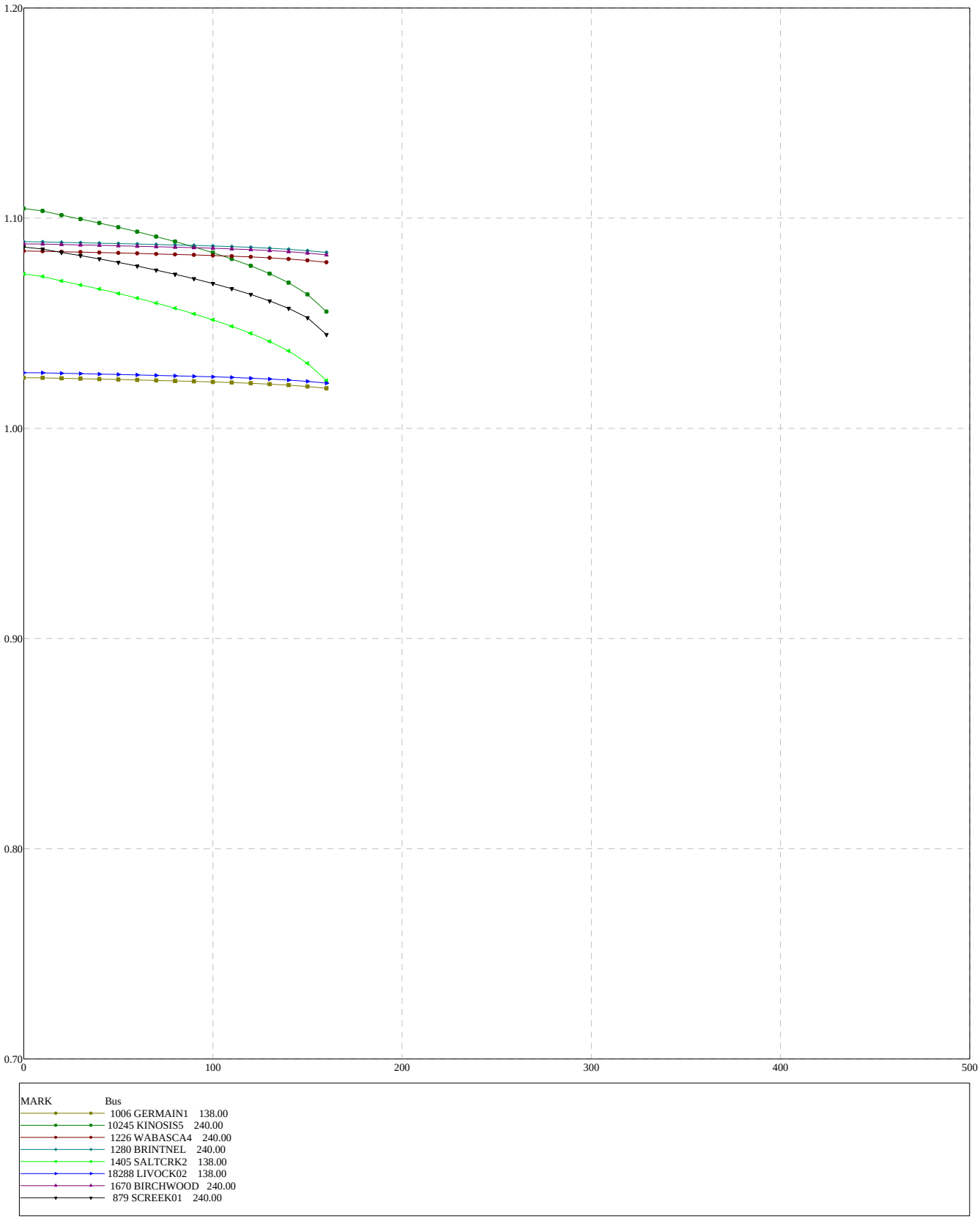

Figure F2-2013WP-4

2012WP BASE CASE
SWINGBUS 1520 FOR FC-2009-5:2013-04-30:19:24--1--1-0-0
FRI, JUN 24 2011 9:35

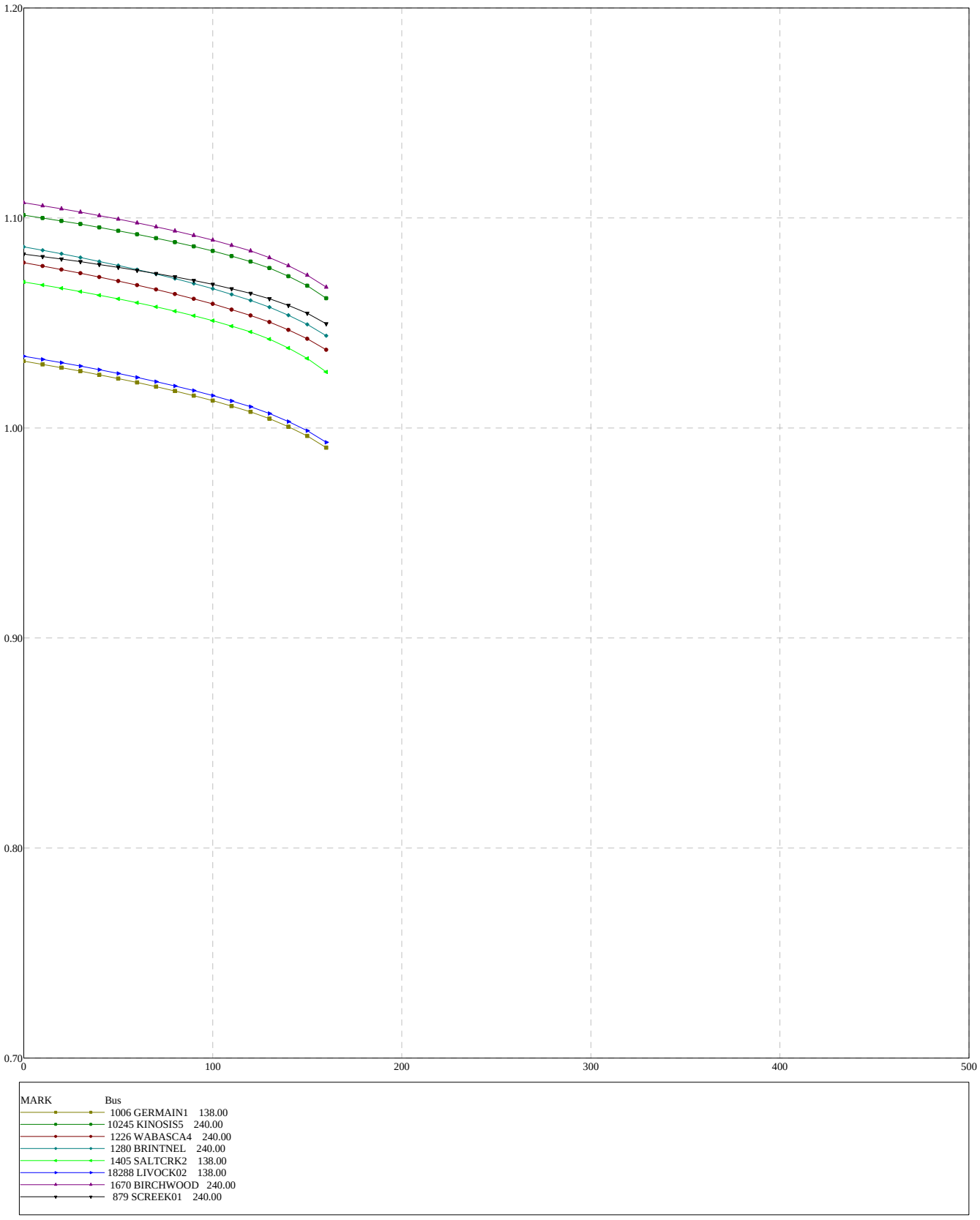

Figure F2-2013WP-5

2012WP BASE CASE
SWINGBUS 1520 FOR FC-2009-5:2013-04-30:19:24--1--1-0-0
FRI, JUN 24 2011 9:36

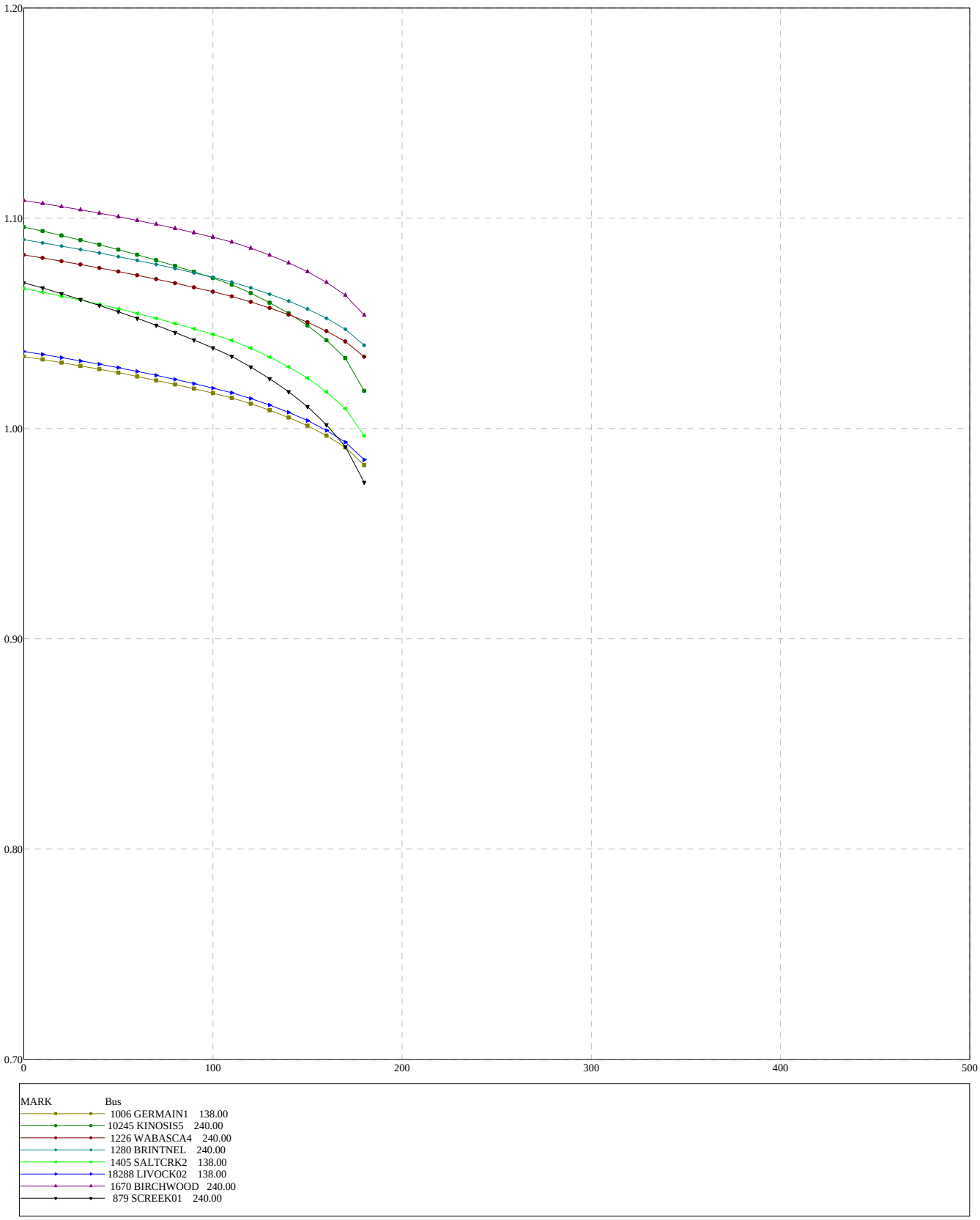

Figure F2-2013WP-6

2012WP BASE CASE
SWINGBUS 1520 FOR FC-2009-5:2013-04-30:19:24--1--1-0-0
FRI, JUN 24 2011 9:28

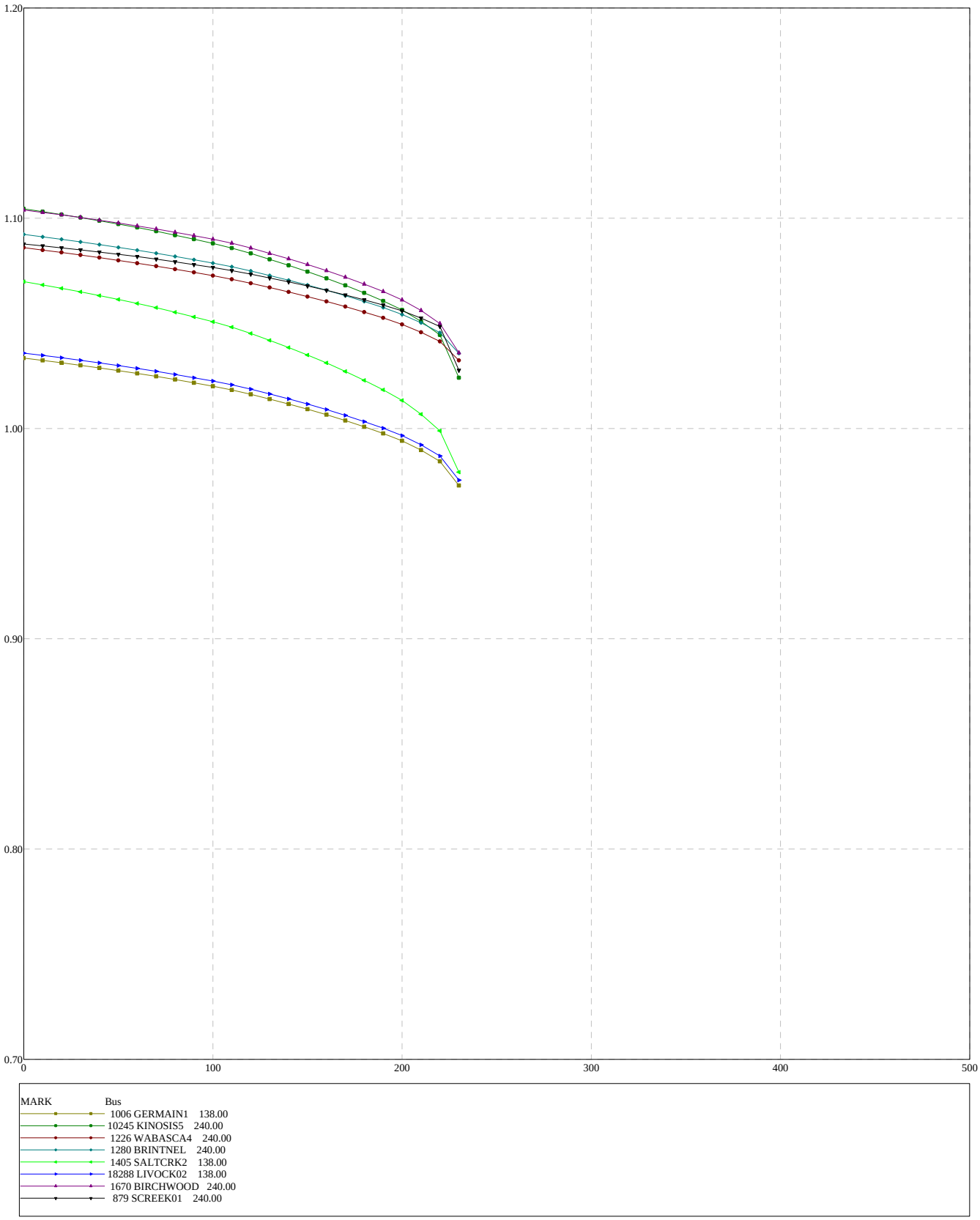

Figure F2-2013WP-7

2012WP BASE CASE
SWINGBUS 1520 FOR FC-2009-5:2013-04-30:19:24--1--1-0-0
FRI, JUN 24 2011 9:29

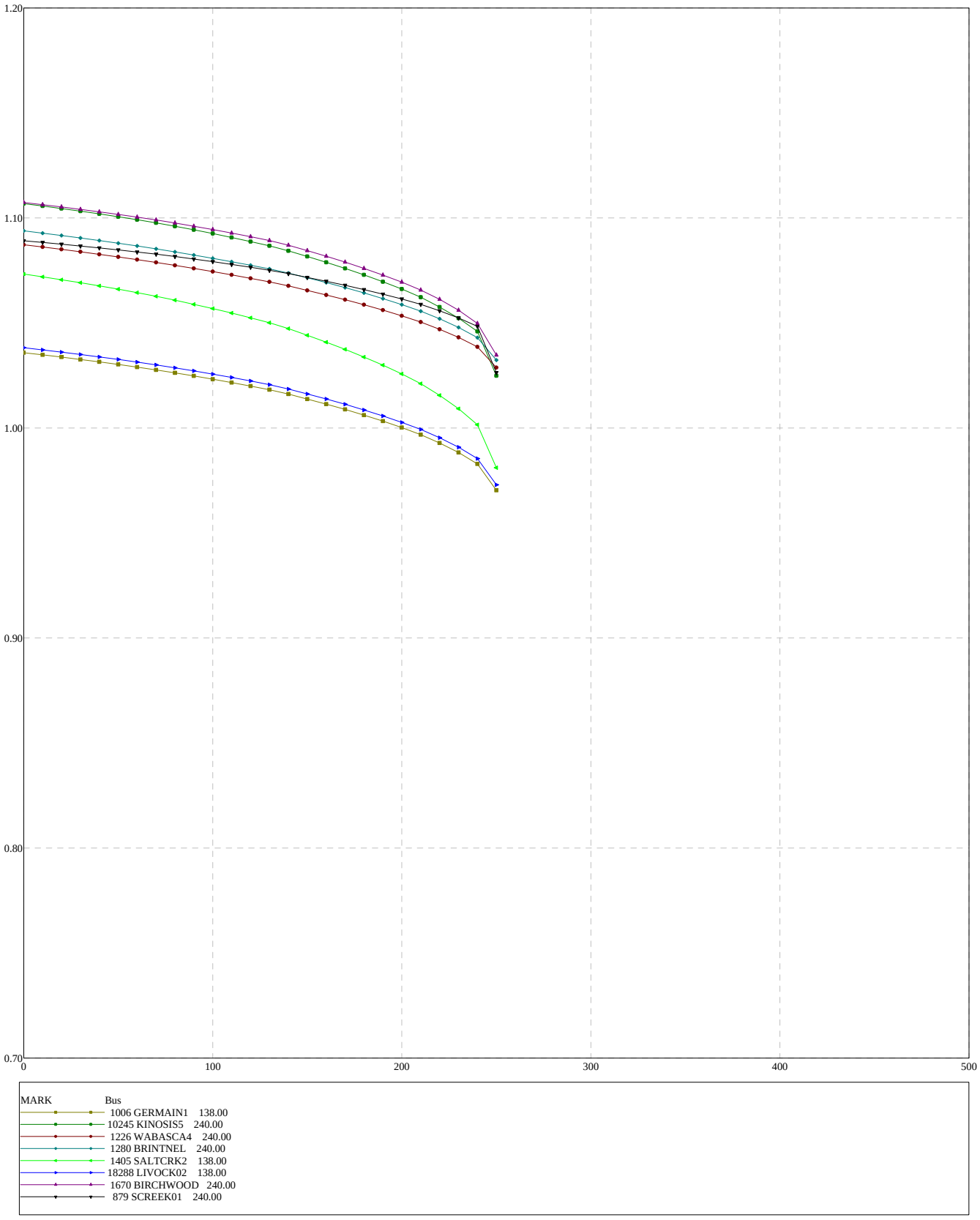

Figure F2-2013WP-8

2012WP BASE CASE
SWINGBUS 1520 FOR FC-2009-5:2013-04-30:19:24--1--1-0-0
FRI, JUN 24 2011 9:27

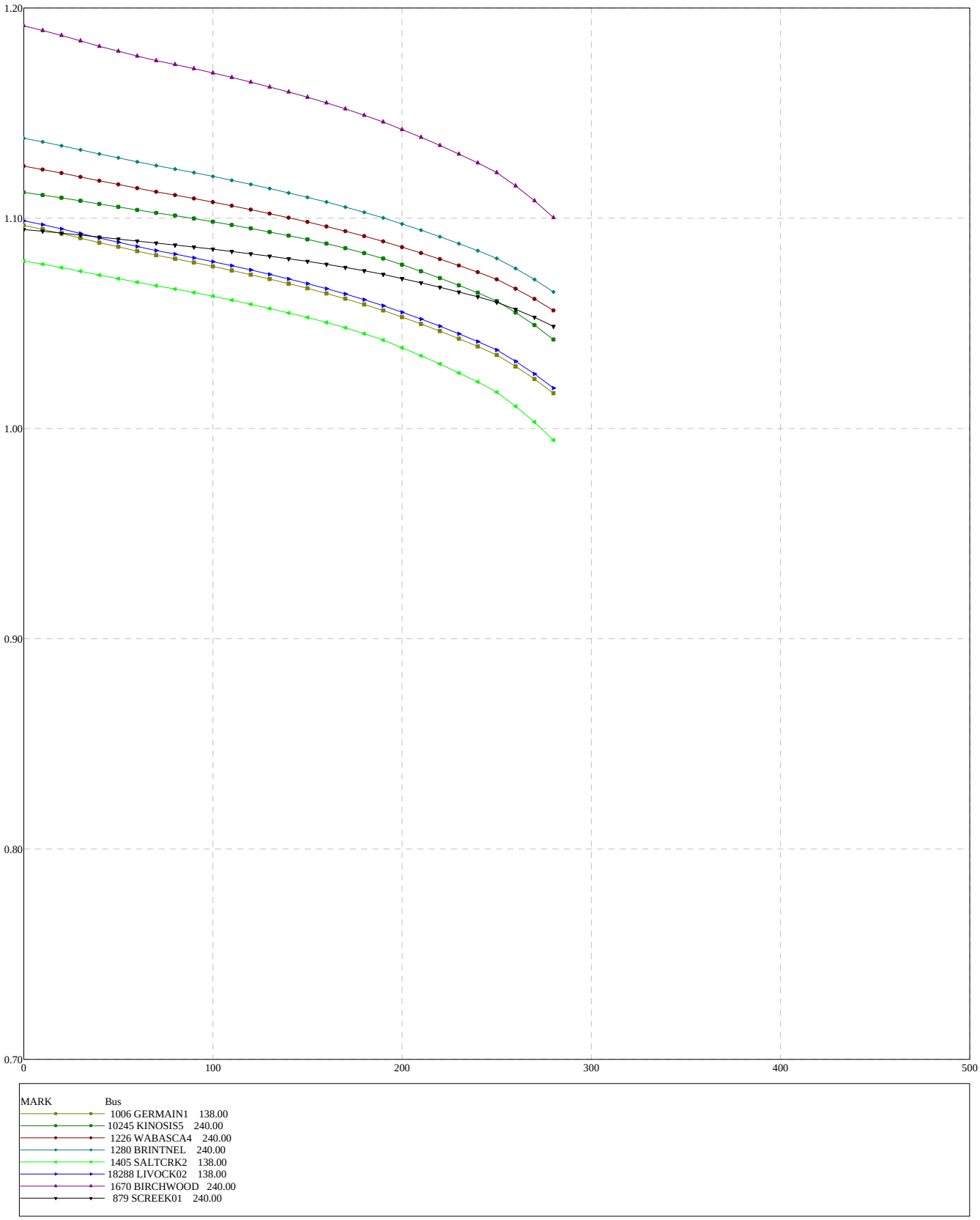

Figure F2-2013WP-9

Table F-3: P-V Analysis Summary – 2014 Summer Peak

Figure Number	System Normal and Category B Contingencies	Forecasted 2014 Summer Peak (MW)	105% Margin (MW)	Nose Point (MW)
Figure F3-2014SP-1	Normal operation condition	1795	1885	2325
Figure F3-2014SP-2	240 kV Kinosis 856S to Leismer 72S	1795	1885	2185
Figure F3-2014SP-3	240 kV 971L Conklin 762S to Sunday Creek	1795	1885	2205
Figure F3-2014SP-4	240 kV 9L10 Brintnell 876S to Livock 939S	1795	1885	2235
Figure F3-2014SP-5	240 kV 9L57 Livock 939S to Birchwood 960S	1795	1885	2265
Figure F3-2014SP-6	240 kV 9L930 Whitefish 825S to Leismer 72S	1795	1885	2225
	Category C5 Contingencies	**Forecasted 2014 Summer Peak (MW)**	**102.5% Margin (MW)**	**Maximum Operating Limit (MW)**
Figure F3-2014SP-7	9L08 9L09, Dover 888S to Ells River 2079S and Joslyn 849S Double Circuit 240 kV Lines	1795	1840	2165
Figure F3-2014SP-8	9L76 9L09, Joslyn 849S to Ells River 2079S and Dover 888S Double Circuit 240 kV Lines	1795	1840	2255
Figure F3-2014SP-9	9L01 9L58, Dover 888S to Ruth Lake 848S Double Circuit 240 kV Lines	1795	1840	2285

TASMO MODEL; OUTPUT GENERATED 2010-03-01 14:45:14
SWINGBUS 1520 FOR FC-2009-5:2016-04-30:19:24--1--1-0-0
MON, AUG 08 2011 11:40

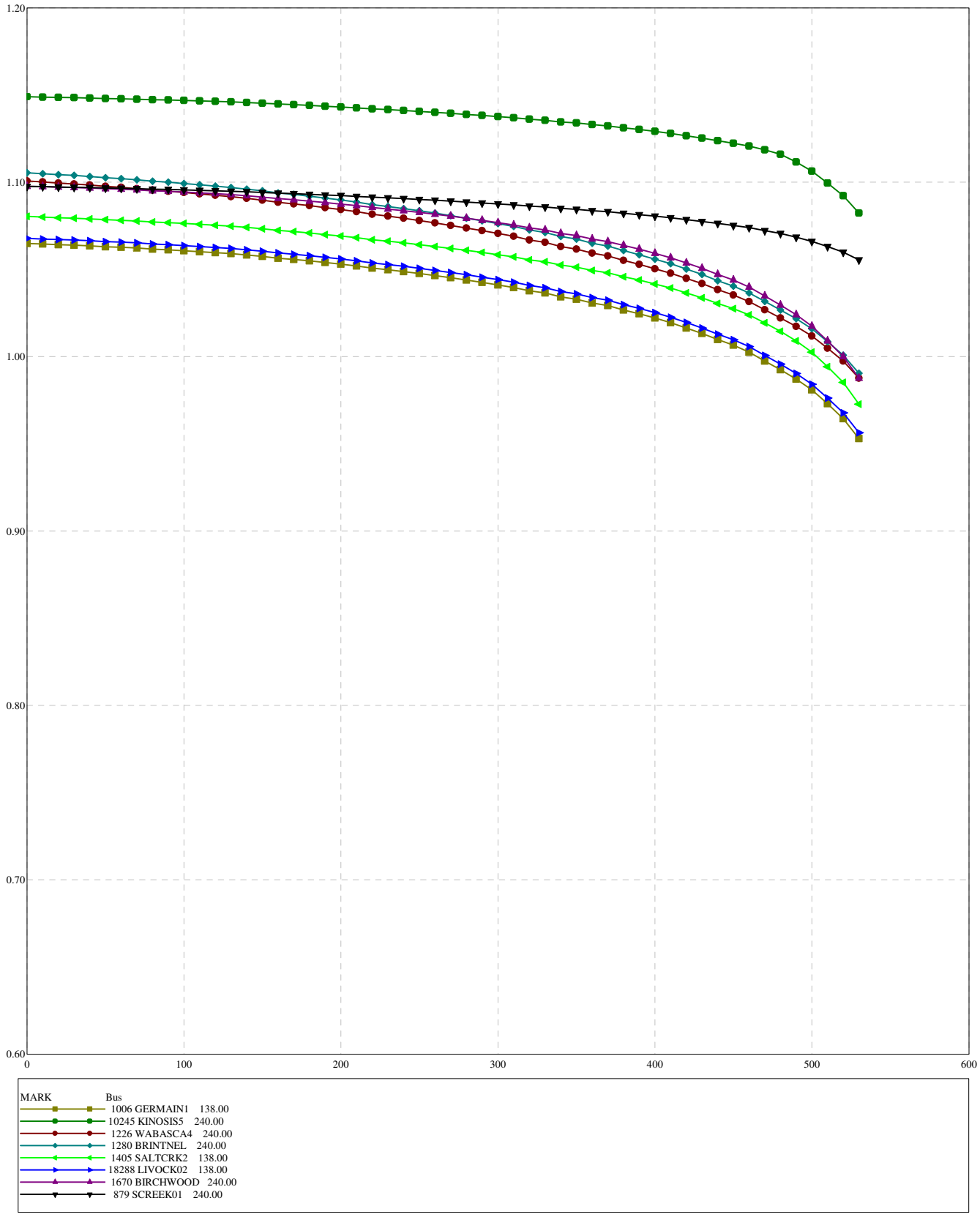

TASMO MODEL; OUTPUT GENERATED 2010-03-01 14:45:14
SWINGBUS 1520 FOR FC-2009-5:2016-04-30:19:24--1--1-0-0
MON, AUG 08 2011 11:43

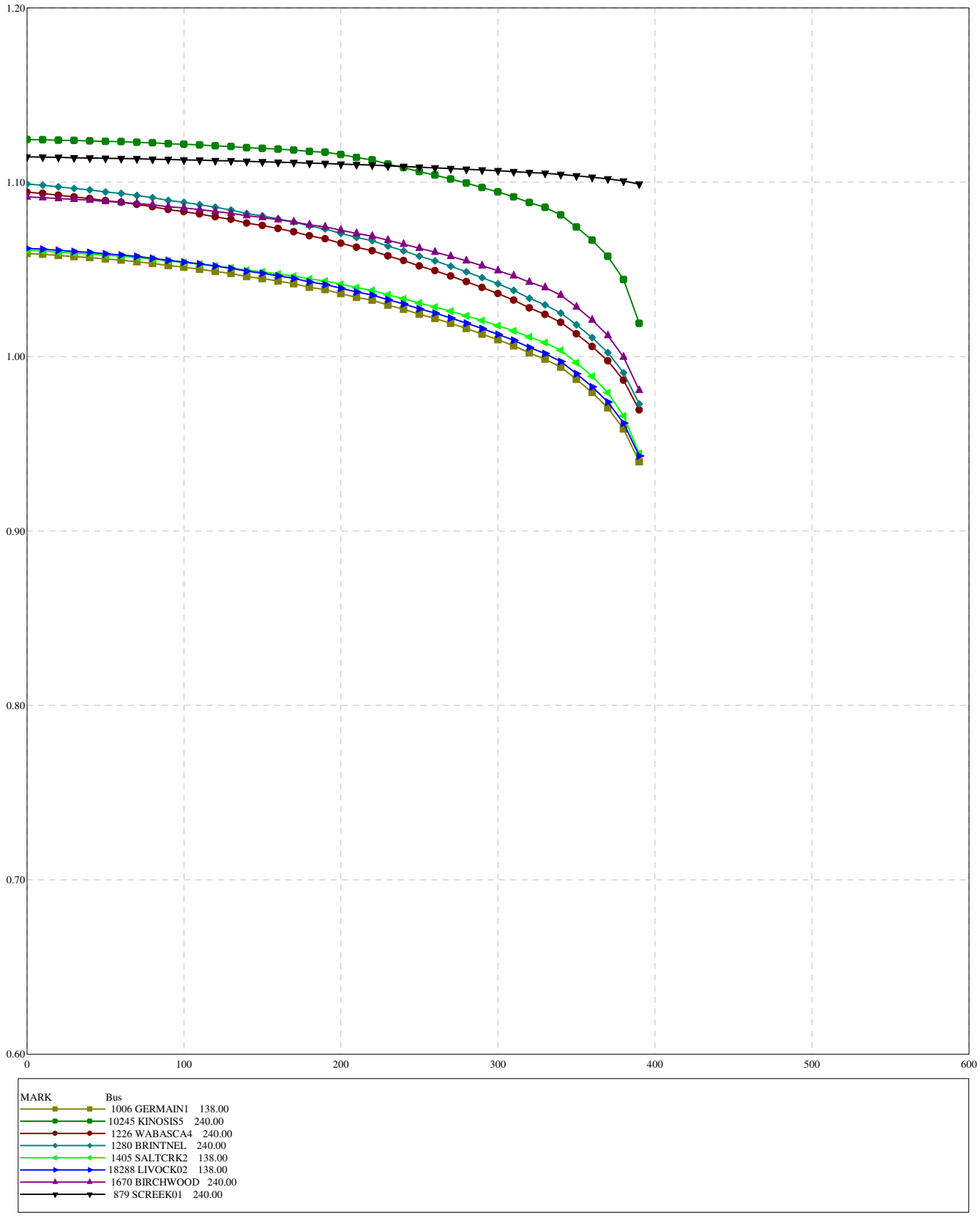

TASMO MODEL; OUTPUT GENERATED 2010-03-01 14:45:14
SWINGBUS 1520 FOR FC-2009-5:2016-04-30:19:24--1--1-0-0
MON, AUG 08 2011 11:43

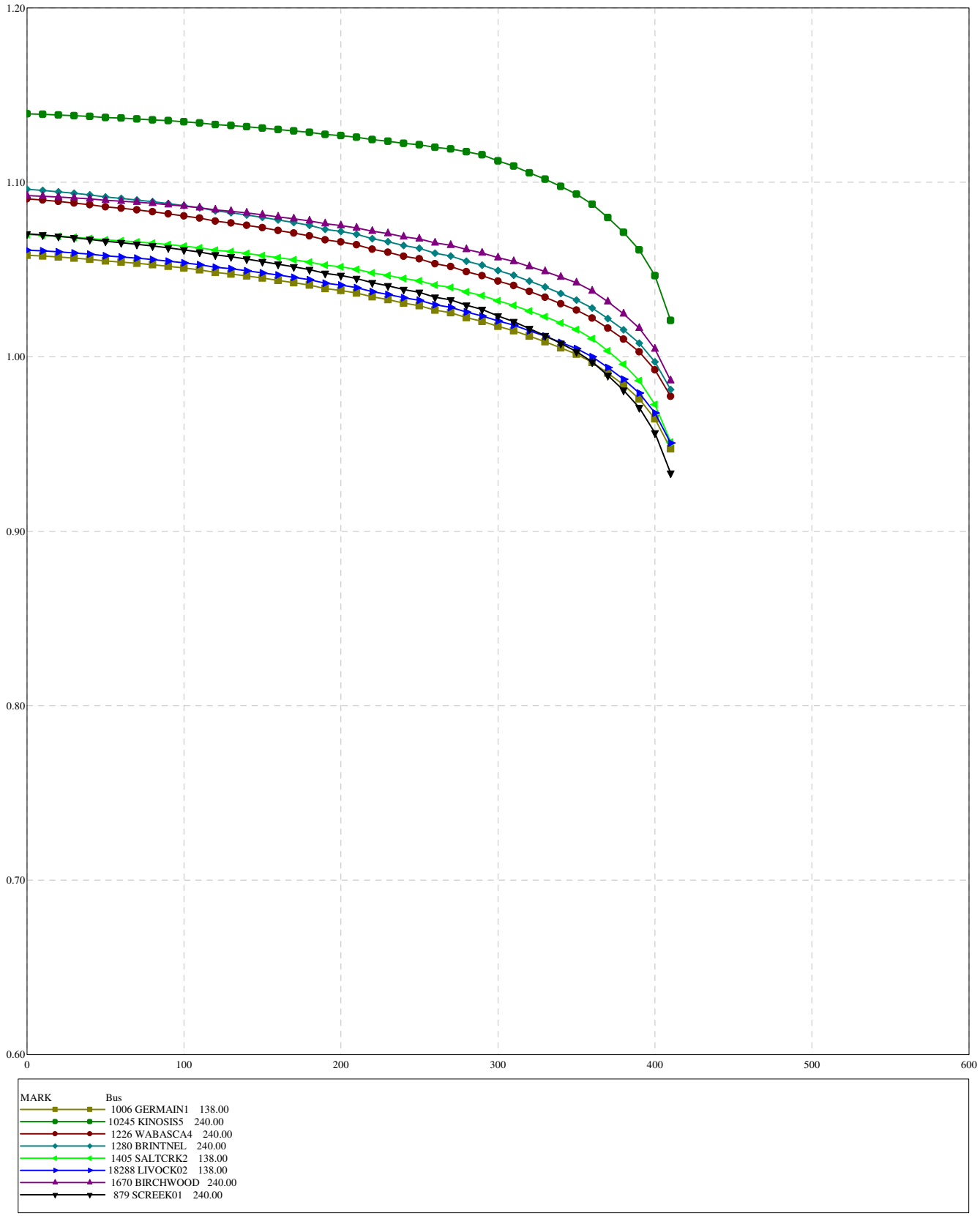

TASMO MODEL; OUTPUT GENERATED 2010-03-01 14:45:14
SWINGBUS 1520 FOR FC-2009-5:2016-04-30:19:24--1--1-0-0
MON, AUG 08 2011 11:46

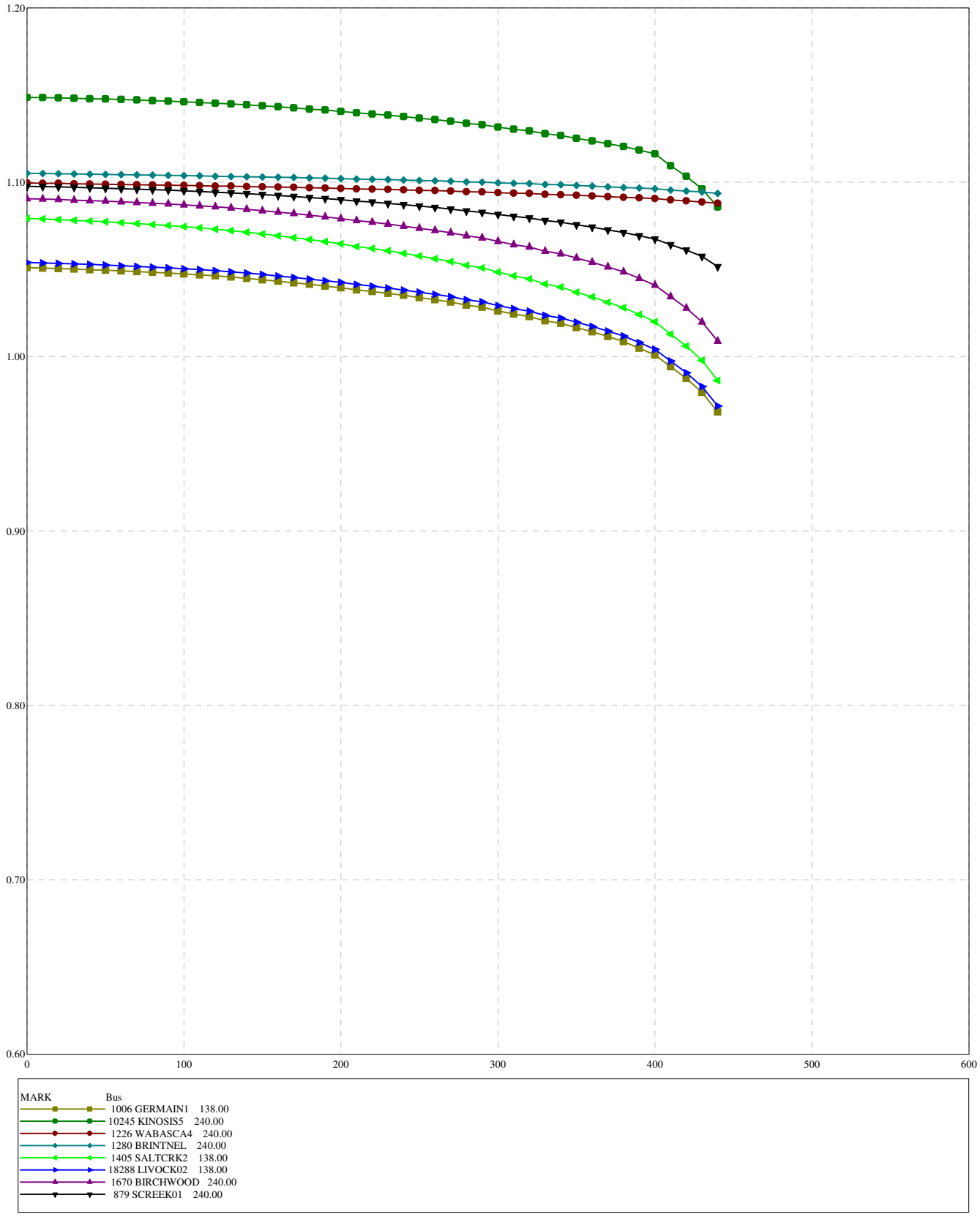

TASMO MODEL; OUTPUT GENERATED 2010-03-01 14:45:14
SWINGBUS 1520 FOR FC-2009-5:2016-04-30:19:24--1--1-0-0
MON, AUG 08 2011 11:46

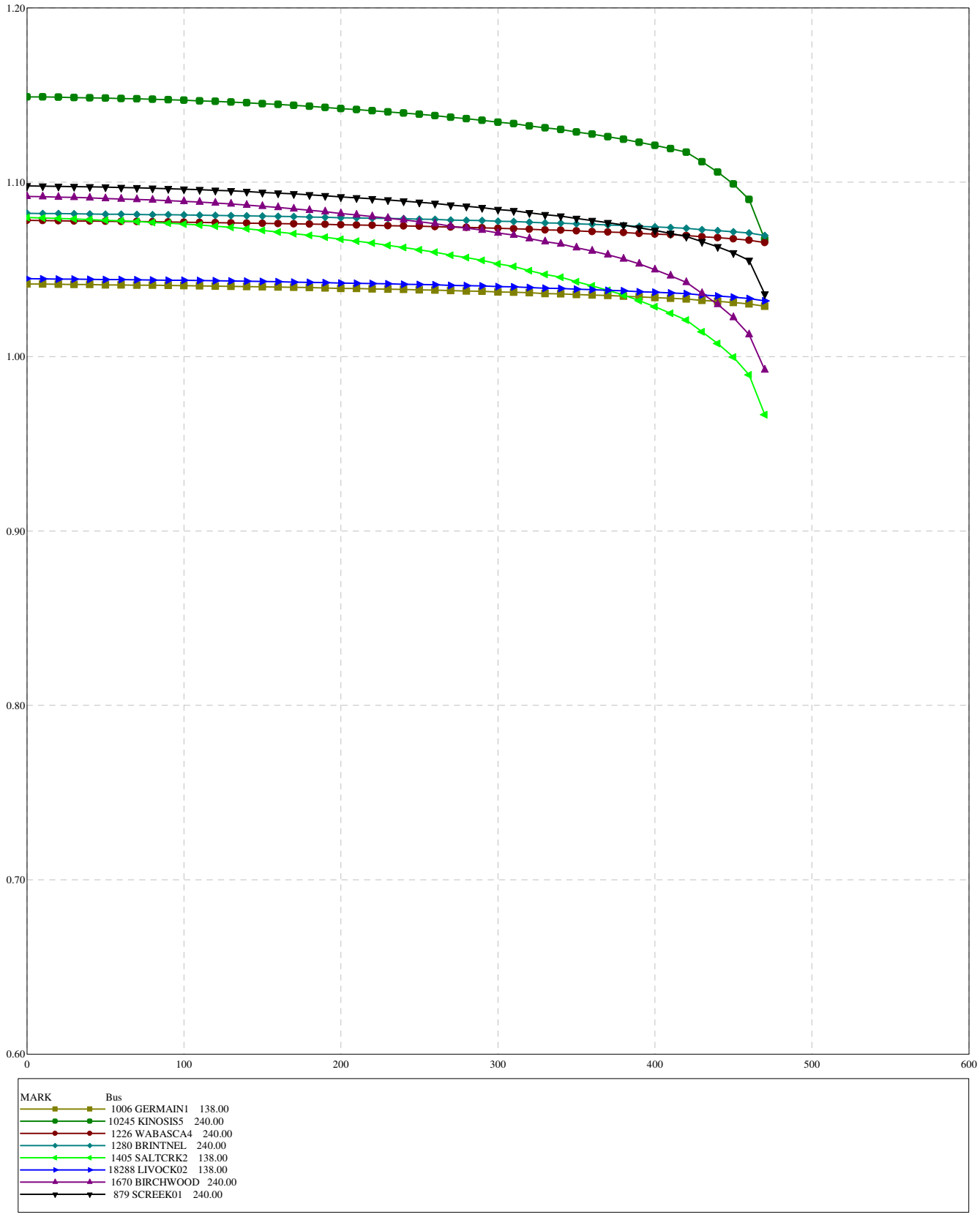

TASMO MODEL; OUTPUT GENERATED 2010-03-01 14:45:14
SWINGBUS 1520 FOR FC-2009-5:2016-04-30:19:24--1--1-0-0
MON, AUG 08 2011 11:45

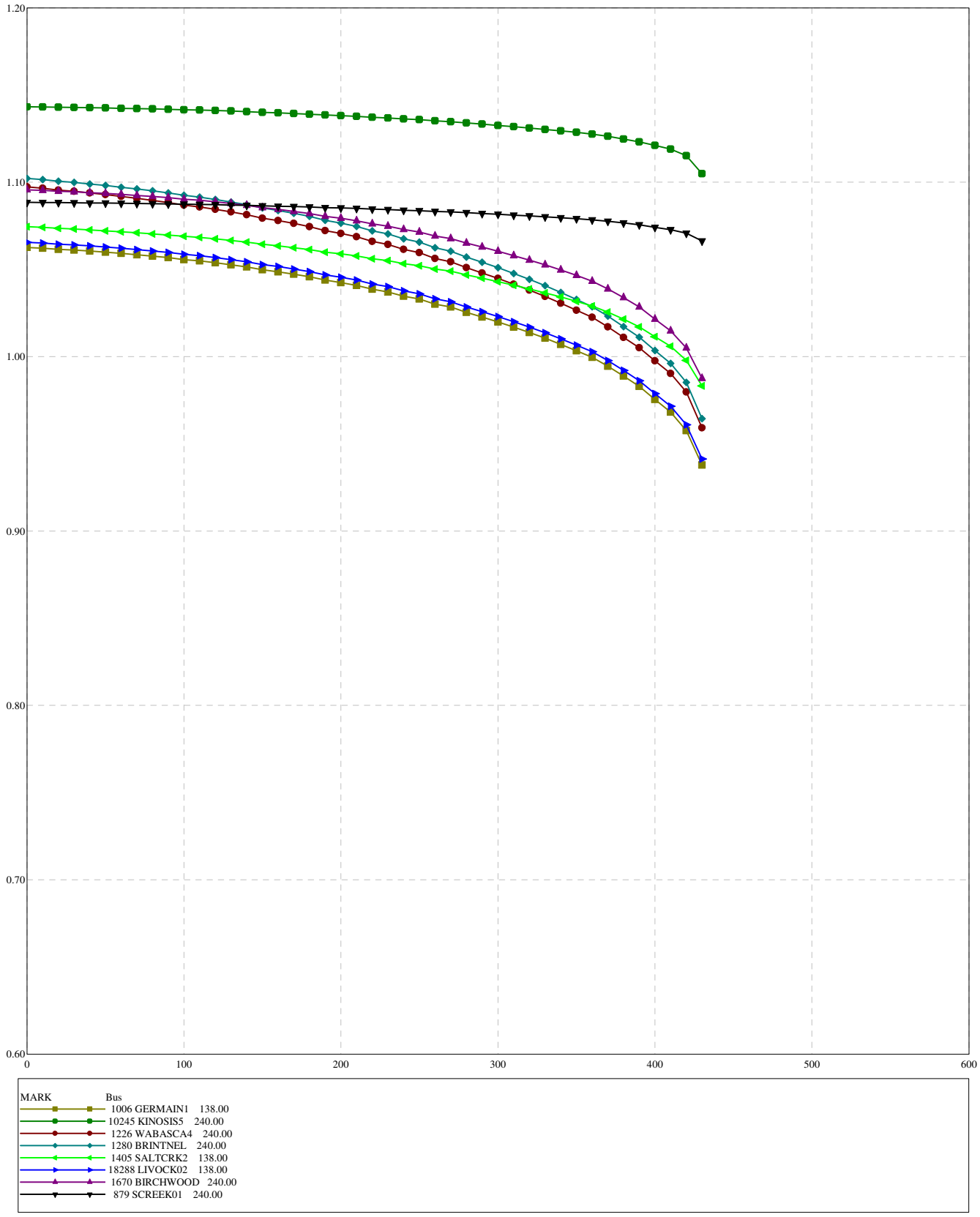

TASMO MODEL; OUTPUT GENERATED 2010-03-01 14:45:14
SWINGBUS 1520 FOR FC-2009-5:2016-04-30:19:24--1--1-0-0
MON, AUG 08 2011 11:42

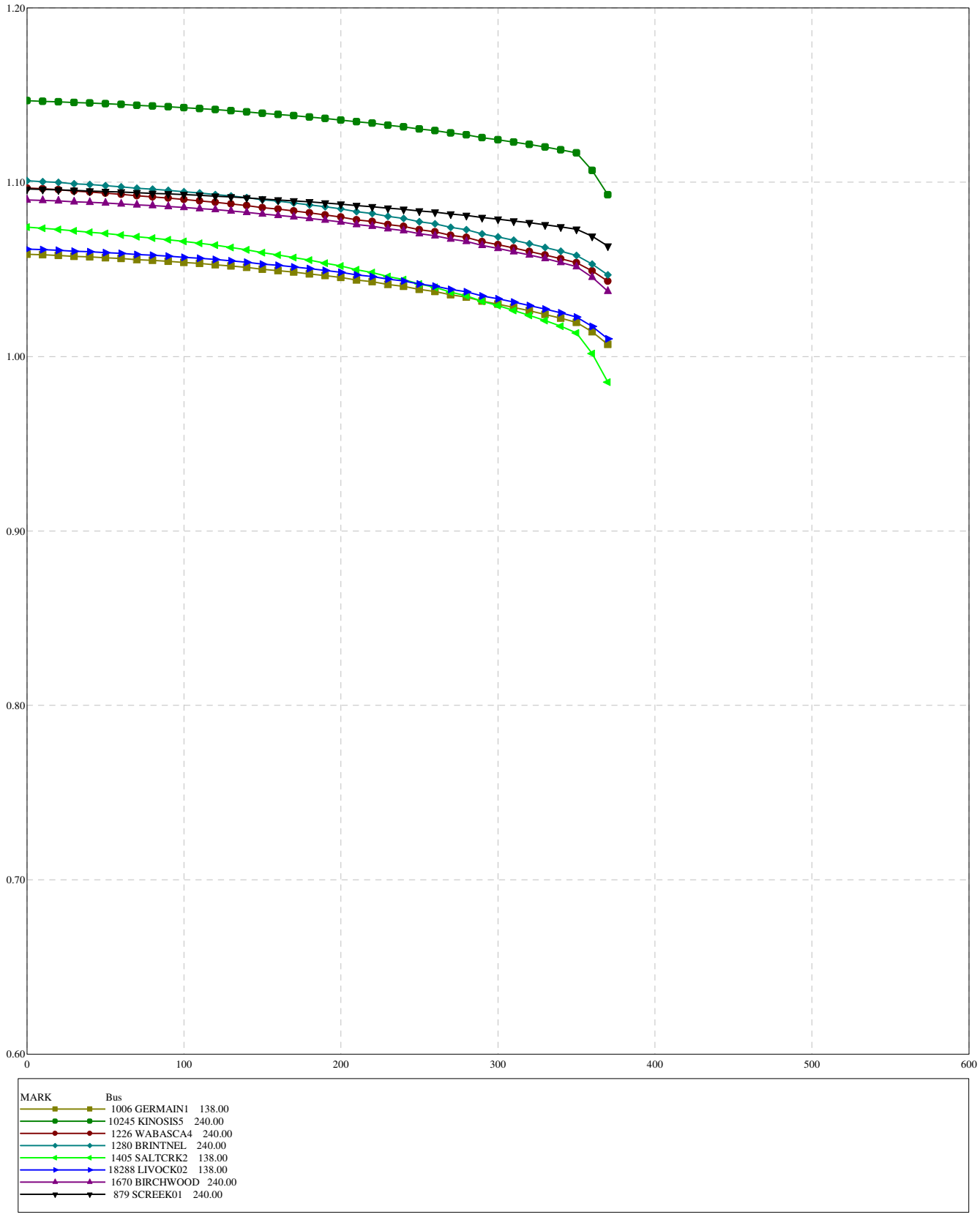

TASMO MODEL; OUTPUT GENERATED 2010-03-01 14:45:14
SWINGBUS 1520 FOR FC-2009-5:2016-04-30:19:24--1--1-0-0
MON, AUG 08 2011 11:42

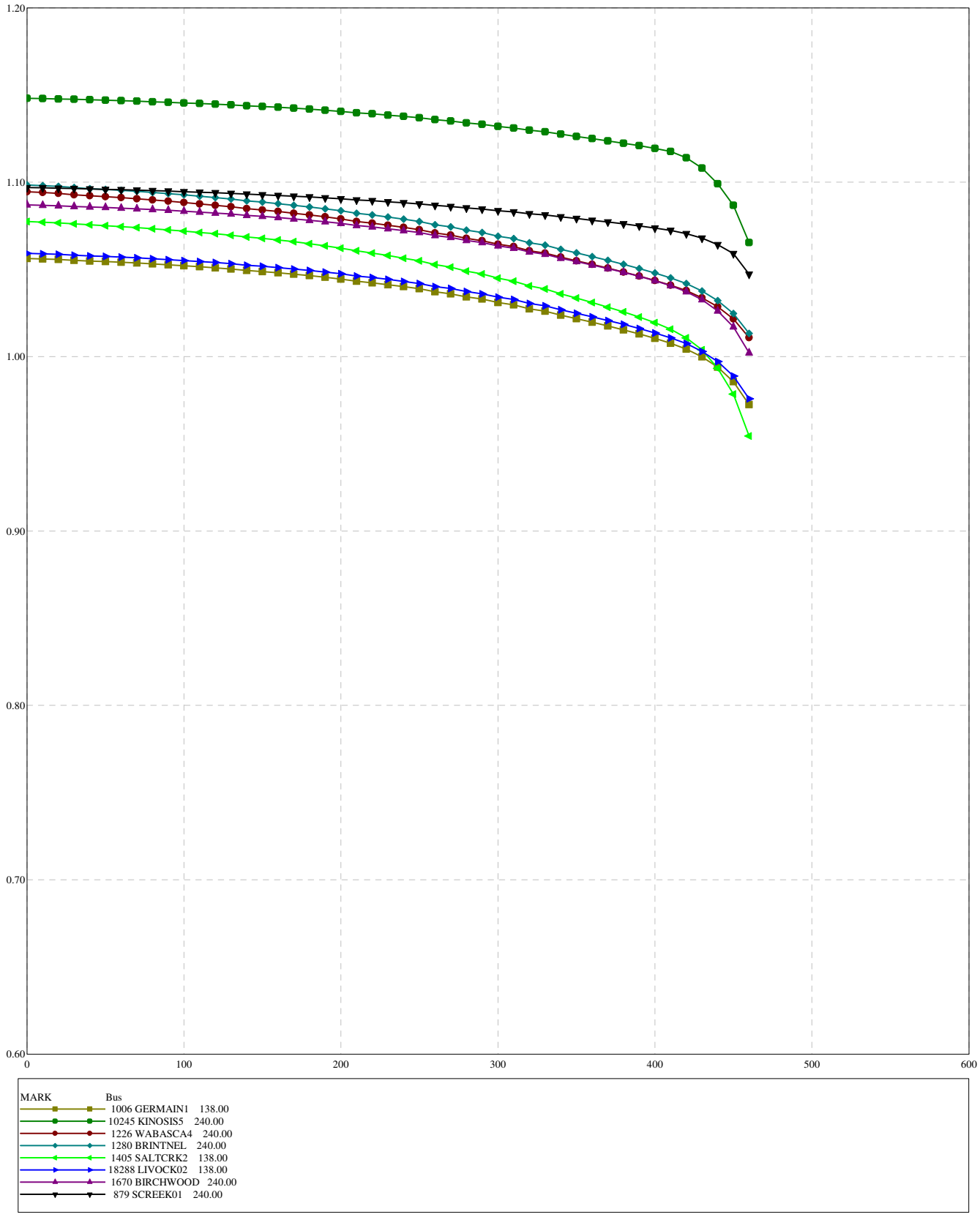

TASMO MODEL; OUTPUT GENERATED 2010-03-01 14:45:14
SWINGBUS 1520 FOR FC-2009-5:2016-04-30:19:24--1--1-0-0
MON, AUG 08 2011 11:42

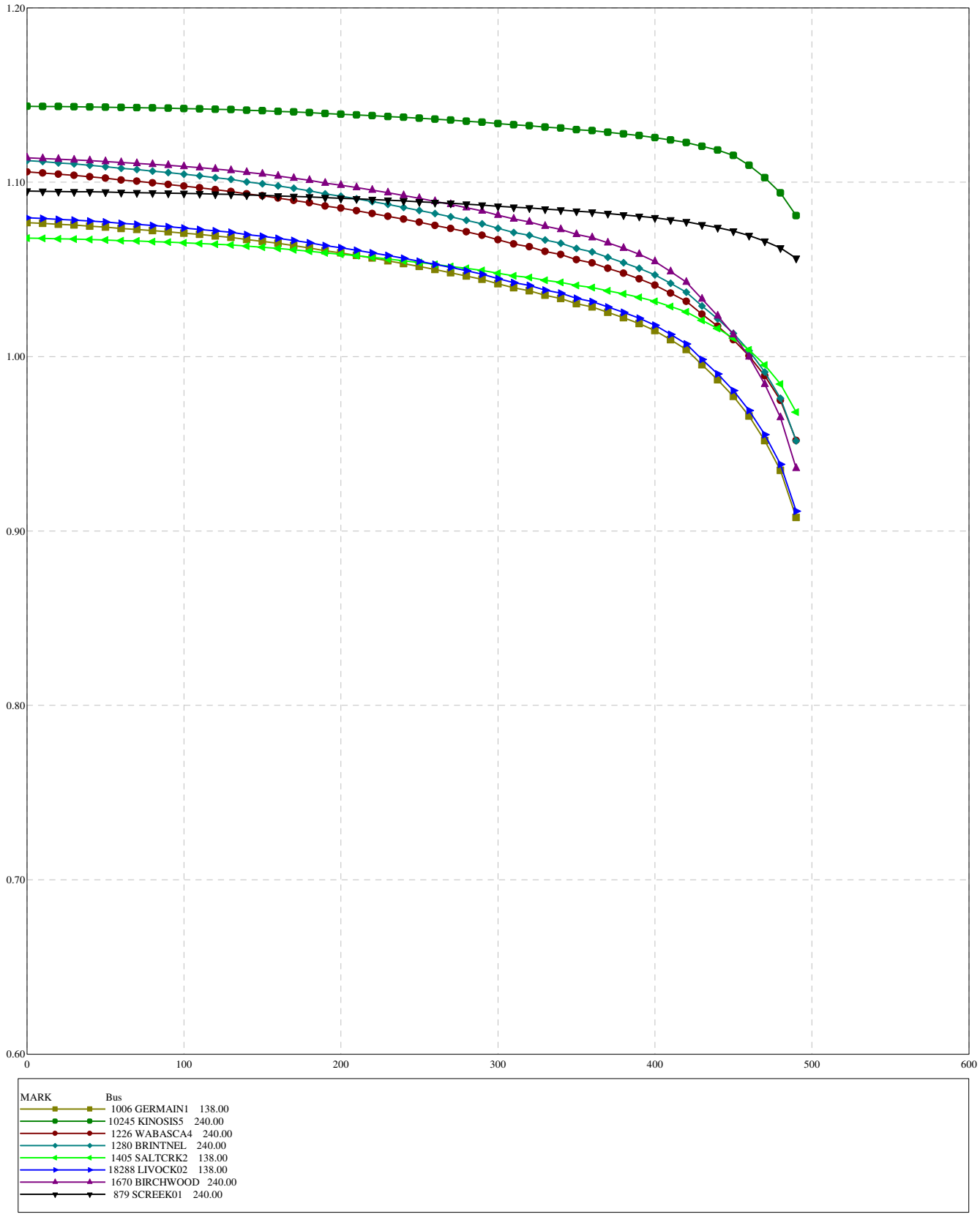

Table F-4: P-V Analysis Summary – 2014 Winter Peak

Figure Number	System Normal and Category B Contingencies	Forecasted 2014 Winter Peak (MW)	105% Margin (MW)	Nose Point (MW)
Figure F4-2014WP-1	Normal operation condition	1942	2039	2412
Figure F4-2014WP-2	240 kV Kinosis 856S to Leismer 72S	1942	2039	2272
Figure F4-2014WP-3	240 kV 971L Conklin 762S to Sunday Creek	1942	2039	2272
Figure F4-2014WP-4	240 kV 9L10 Brintnell 876S to Livock 939S	1942	2039	2292
Figure F4-2014WP-5	240 kV 9L57 Livock 939S to Birchwood 960S	1942	2039	2312
Figure F4-2014WP-6	240 kV 9L930 Whitefish 825S to Leismer 72S	1942	2039	2312
	Category C5 Contingencies	**Forecasted 2014 Winter Peak (MW)**	**102.5% Margin (MW)**	**Maximum Operating Limit (MW)**
Figure F4-2014WP-7	9L08 9L09, Dover 888S to Ells River 2079S and Joslyn 849S Double Circuit 240 kV Lines	1942	1991	2272
Figure F4-2014WP-8	9L76 9L09, Joslyn 849S to Ells River 2079S and Dover 888S Double Circuit 240 kV Lines	1942	1991	2352
Figure F4-2014WP-9	9L01 9L58, Dover 888S to Ruth Lake 848S Double Circuit 240 kV Lines	1942	1991	2402

TASMO MODEL; OUTPUT GENERATED 2010-03-01 14:45:14
SWINGBUS 1520 FOR FC-2009-5:2016-04-30:19:24--1--1-0-0
THU, JUN 23 2011 15:04

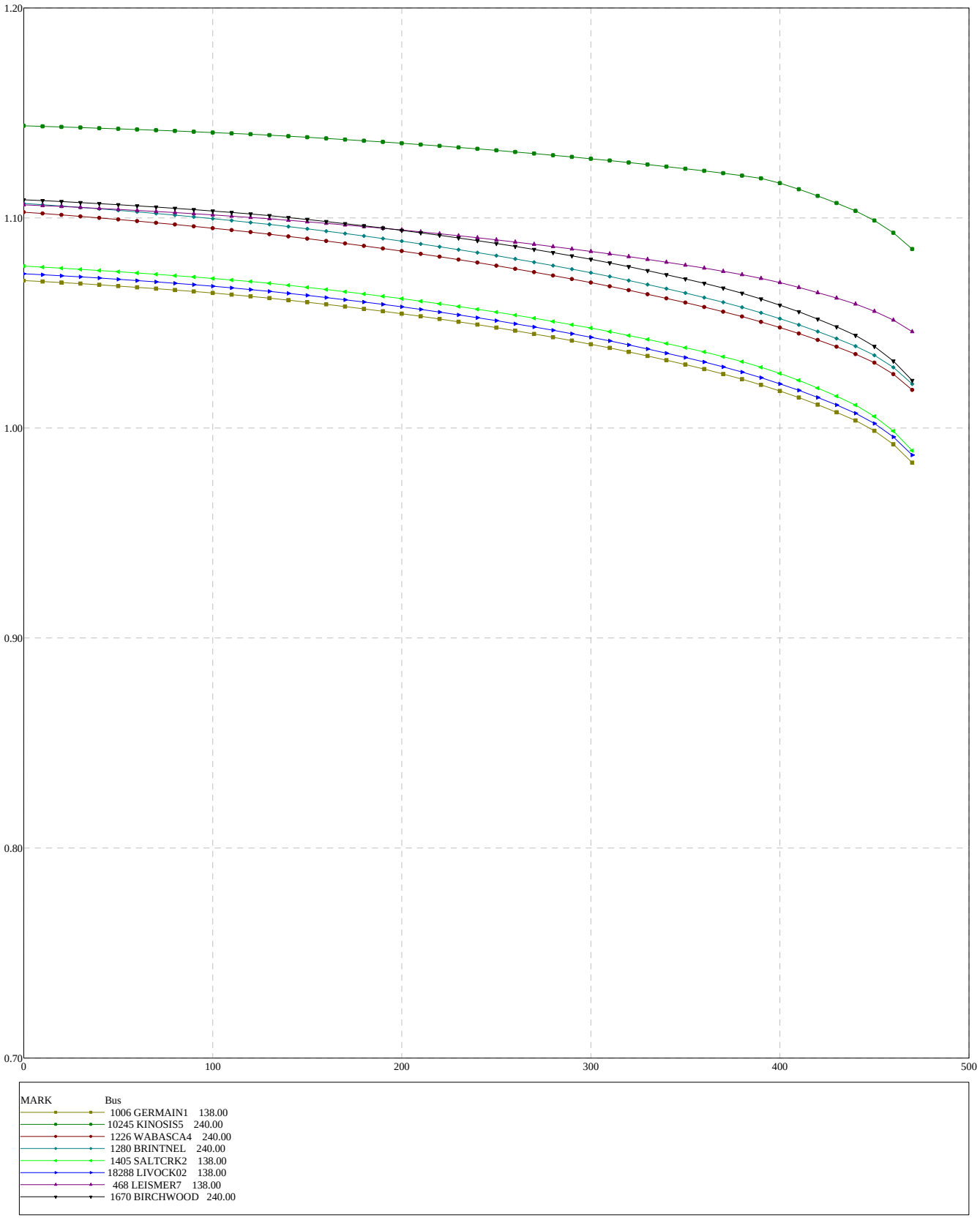

Figure F4-2014WP-1

TASMO MODEL; OUTPUT GENERATED 2010-03-01 14:45:14
SWINGBUS 1520 FOR FC-2009-5:2016-04-30:19:24--1--1-0-0
THU, JUN 23 2011 14:48

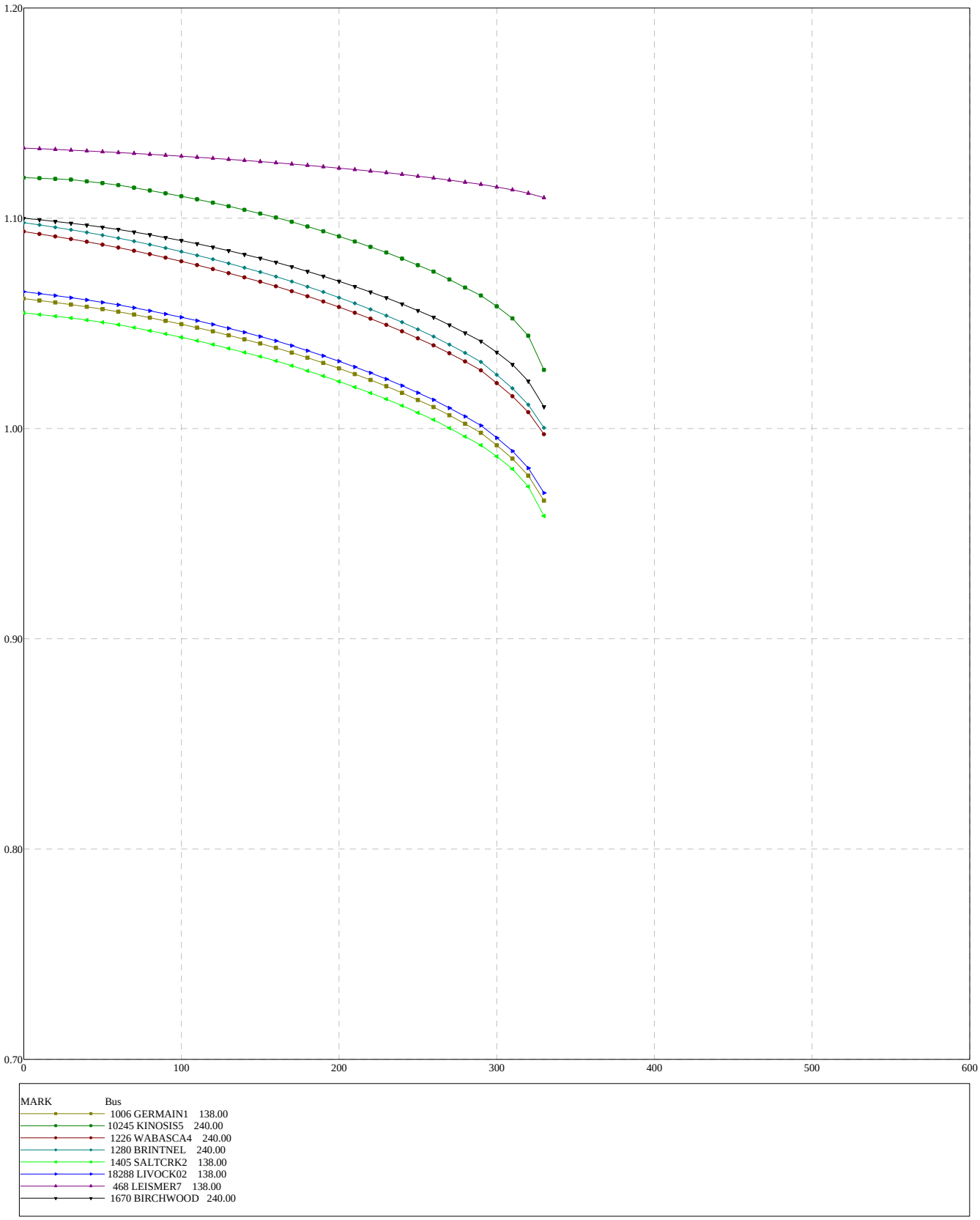

Figure F4-2014WP-2

TASMO MODEL; OUTPUT GENERATED 2010-03-01 14:45:14
SWINGBUS 1520 FOR FC-2009-5:2016-04-30:19:24--1--1-0-0
THU, JUN 23 2011 14:51

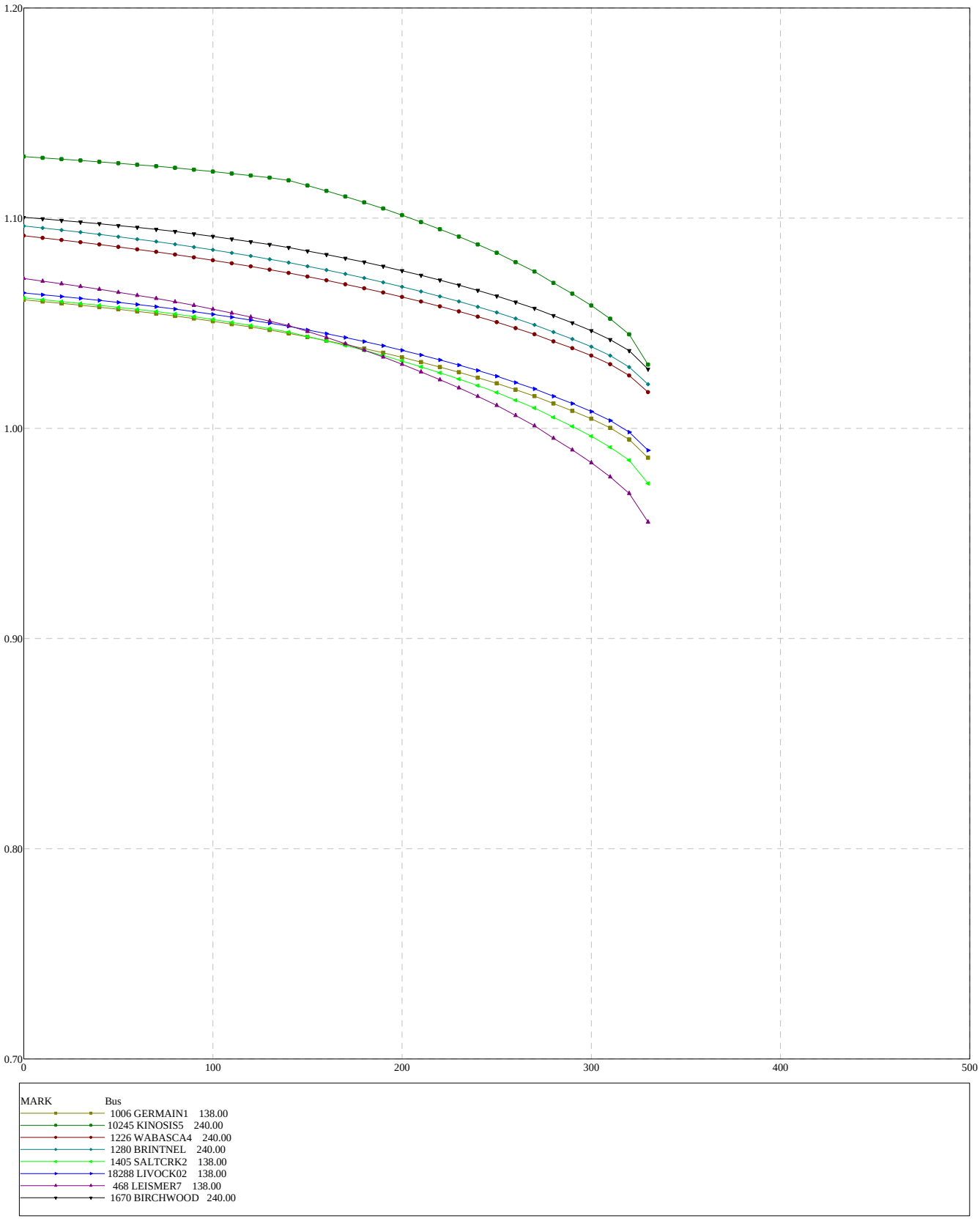

Figure F4-2014WP-3

TASMO MODEL; OUTPUT GENERATED 2010-03-01 14:45:14
SWINGBUS 1520 FOR FC-2009-5:2016-04-30:19:24--1--1-0-0
THU, JUN 23 2011 14:52

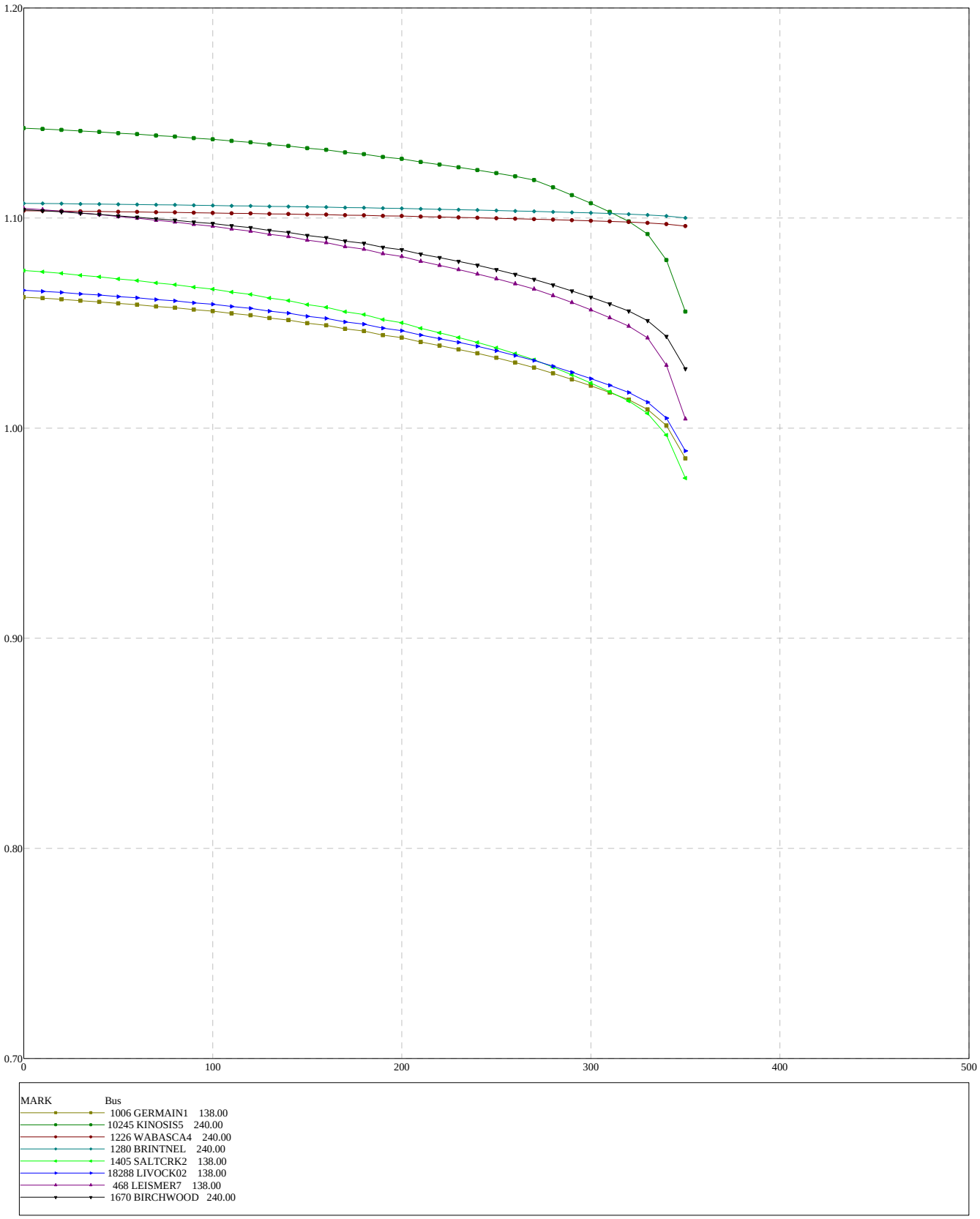

Figure F4-2014WP-4

TASMO MODEL; OUTPUT GENERATED 2010-03-01 14:45:14
SWINGBUS 1520 FOR FC-2009-5:2016-04-30:19:24--1--1-0-0
THU, JUN 23 2011 15:02

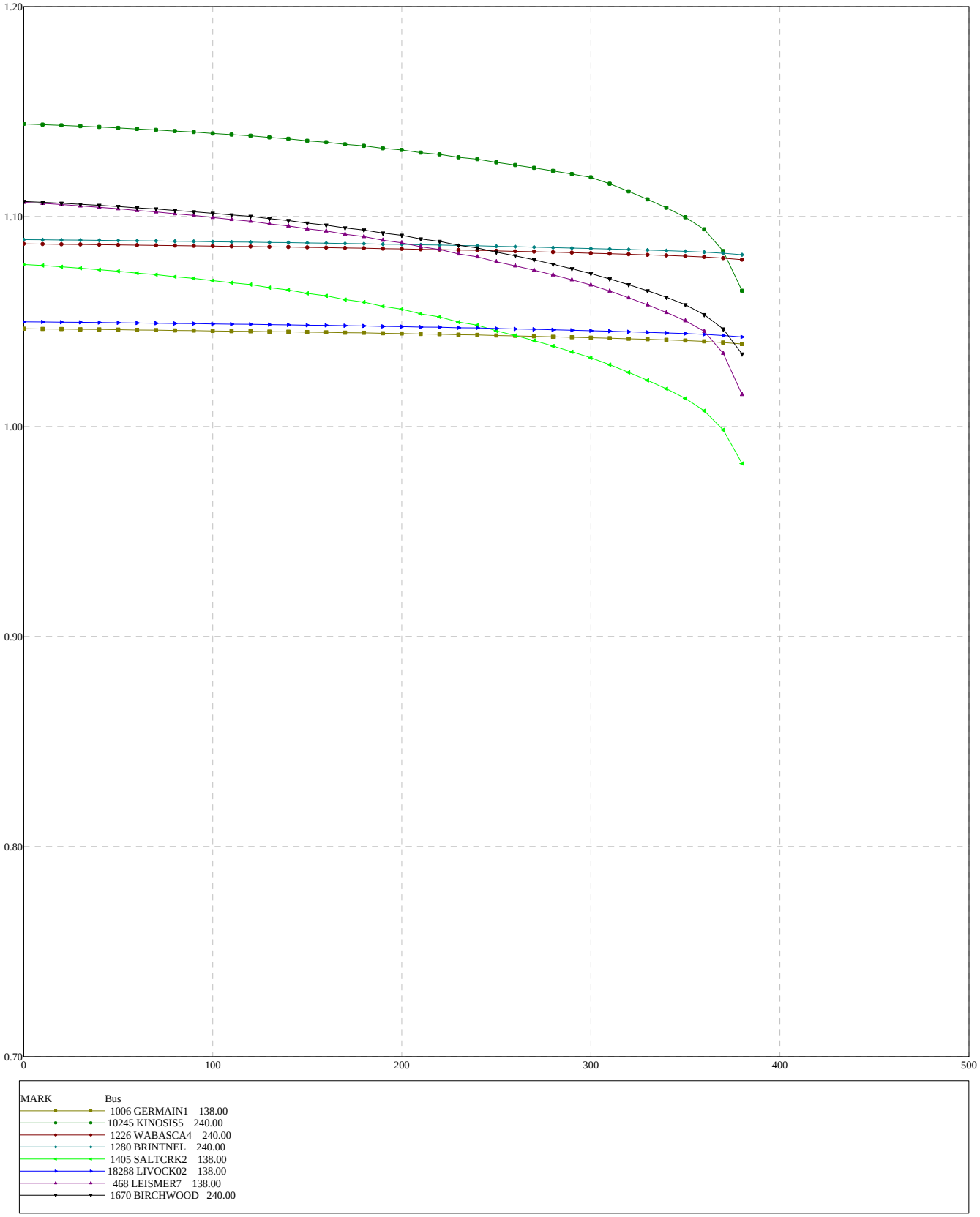

Figure F4-2014WP-5

TASMO MODEL; OUTPUT GENERATED 2010-03-01 14:45:14
SWINGBUS 1520 FOR FC-2009-5:2016-04-30:19:24--1--1-0-0
THU, JUN 23 2011 15:04

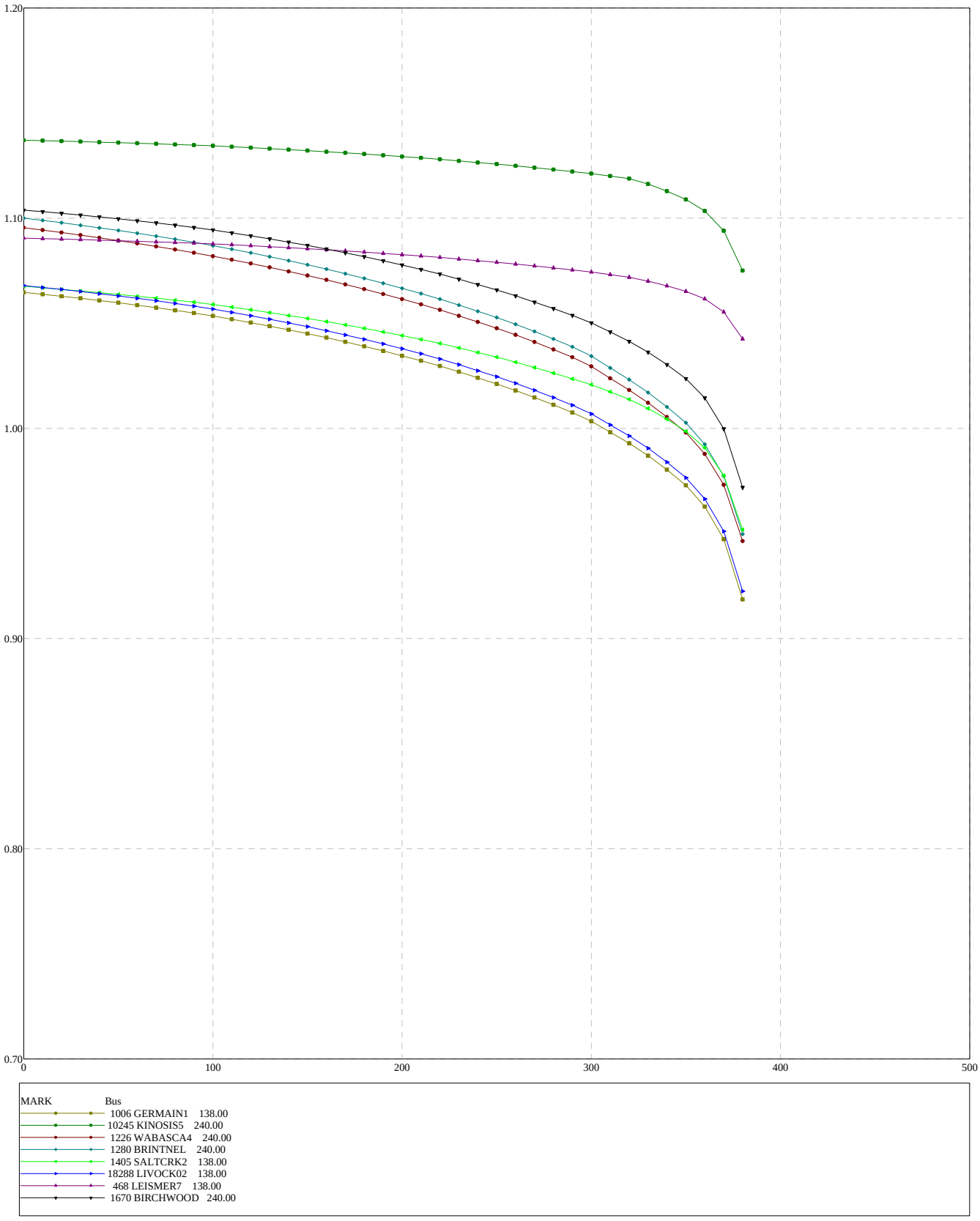

Figure F4-2014WP-6

TASMO MODEL; OUTPUT GENERATED 2010-03-01 14:45:14
SWINGBUS 1520 FOR FC-2009-5:2016-04-30:19:24--1--1-0-0
THU, JUN 23 2011 16:38

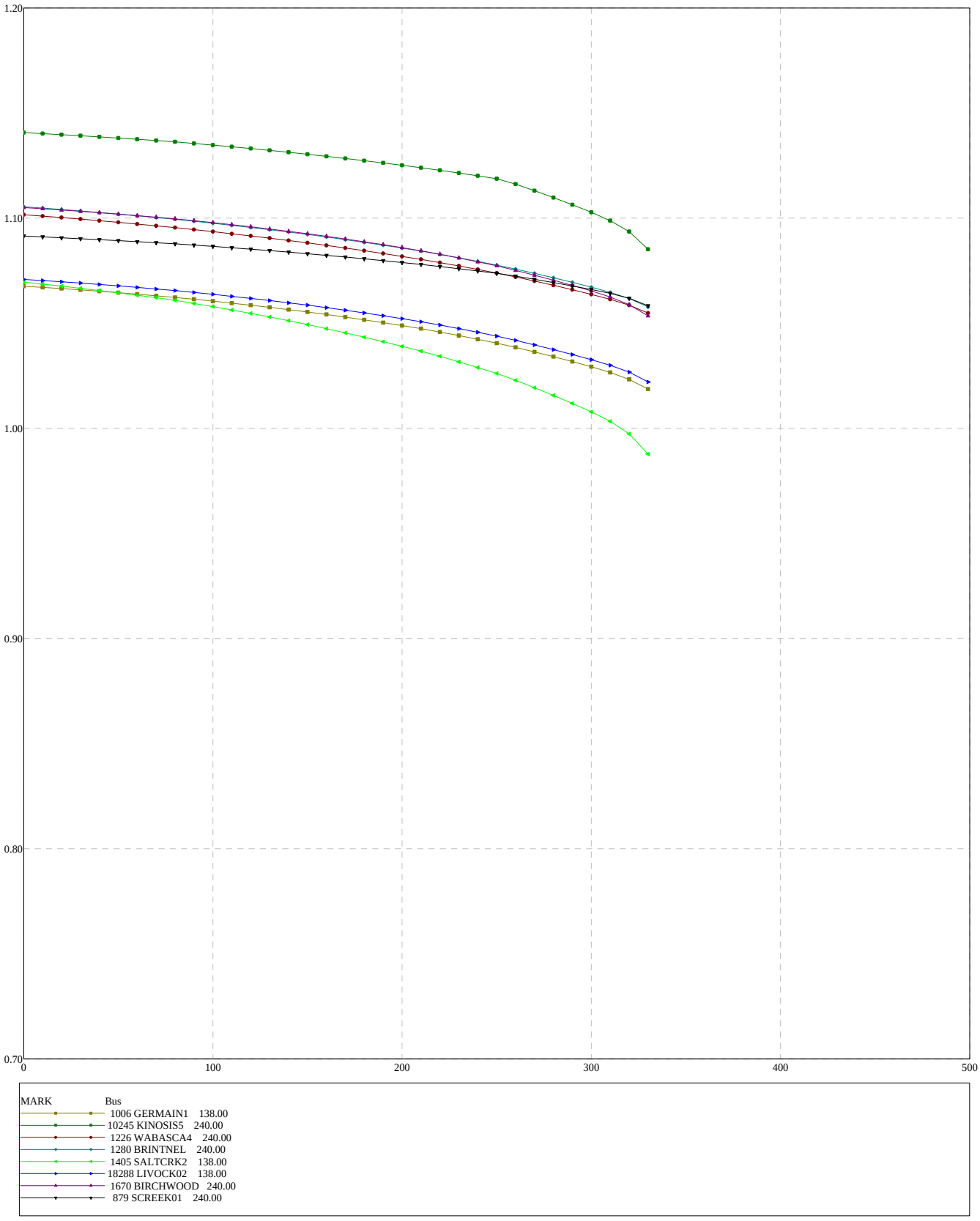

Figure F4-2014WP-7

TASMO MODEL; OUTPUT GENERATED 2010-03-01 14:45:14
SWINGBUS 1520 FOR FC-2009-5:2016-04-30:19:24--1--1-0-0
THU, JUN 23 2011 16:39

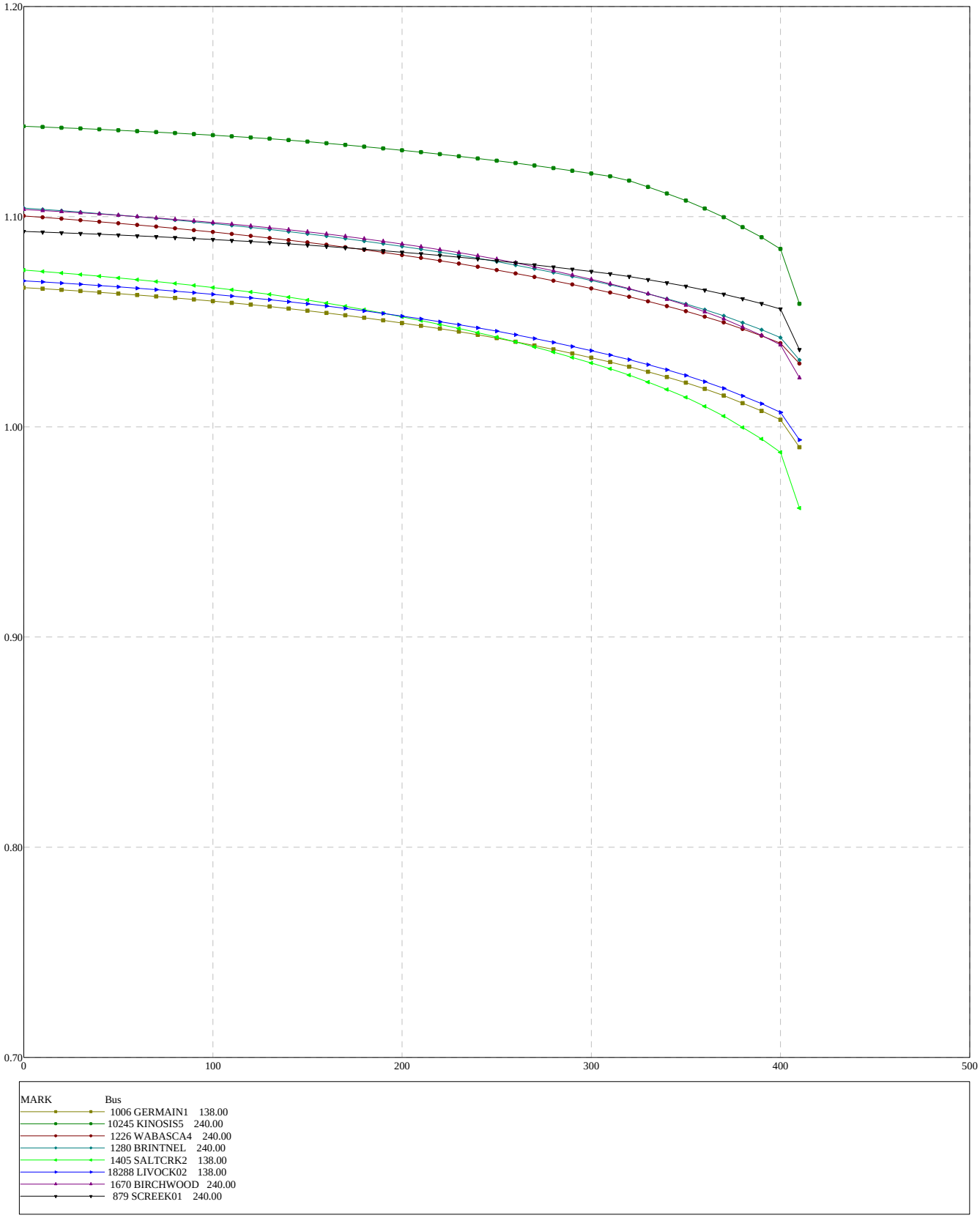

Figure F4-2014WP-8

TASMO MODEL; OUTPUT GENERATED 2010-03-01 14:45:14
SWINGBUS 1520 FOR FC-2009-5:2016-04-30:19:24--1--1-0-0
THU, JUN 23 2011 16:05

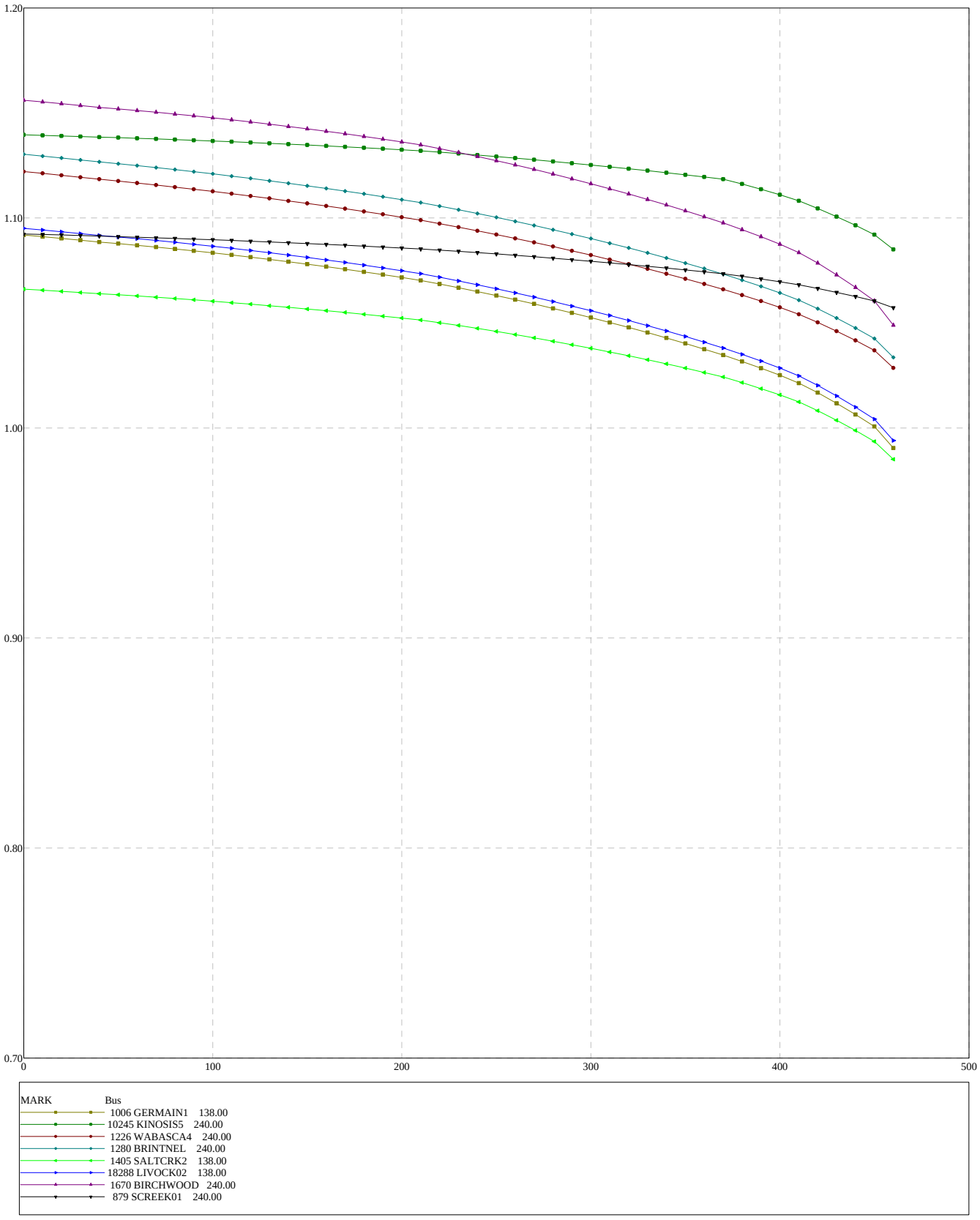

Figure F4-2014WP-9

Table F-5: P-V Analysis Summary – 2015 Summer Peak

Figure Number	System Normal and Category B Contingencies	Forecasted 2015 Summer Peak (MW)	105% Margin (MW)	Nose Point (MW)
Figure F5-2015SP-1	Base Case	1928	2024	2248
Figure F5-2015SP-2	240 kV 971L Livock 939S to Wesly Creek 834S	1928	2024	2048
Figure F5-2015SP-3	240 kV 971L Conklin 762S to Sunday Creek	1928	2024	2078
Figure F5-2015SP-4	240 kV Kinosis 856S to Leismer 72S	1928	2024	2078
Figure F5-2015SP-5	240 kV 9L930 Whitefish 825S to Leismer 72S	1928	2024	2098
Figure F5-2015SP-6	240 kV 9L57 Livock 939S to Birchwood 960S	1928	2024	2188
	Category C5 Contingencies	**Forecasted 2015 Summer Peak (MW)**	**102.5% Margin (MW)**	**Maximum Operating Limit (MW)**
Figure F5-2015SP-7	9L08 9L09, Dover 888S to Ells River 2079S and Joslyn 849S Double Circuit 240 kV Lines	1928	1976	2218
Figure F5-2015SP-8	9L76 9L09, Joslyn 849S to Ells River 2079S and Dover 888S Double Circuit 240 kV Lines	1928	1976	2228
Figure F5-2015SP-9	9L01 9L58, Dover 888S to Ruth Lake 848S Double Circuit 240 kV Lines	1928	1976	2228

TASMO MODEL; OUTPUT GENERATED 2010-03-01 14:45:14
SWINGBUS 1520 FOR FC-2009-5:2016-04-30:19:24--1--1-0-0
MON, AUG 08 2011 13:59

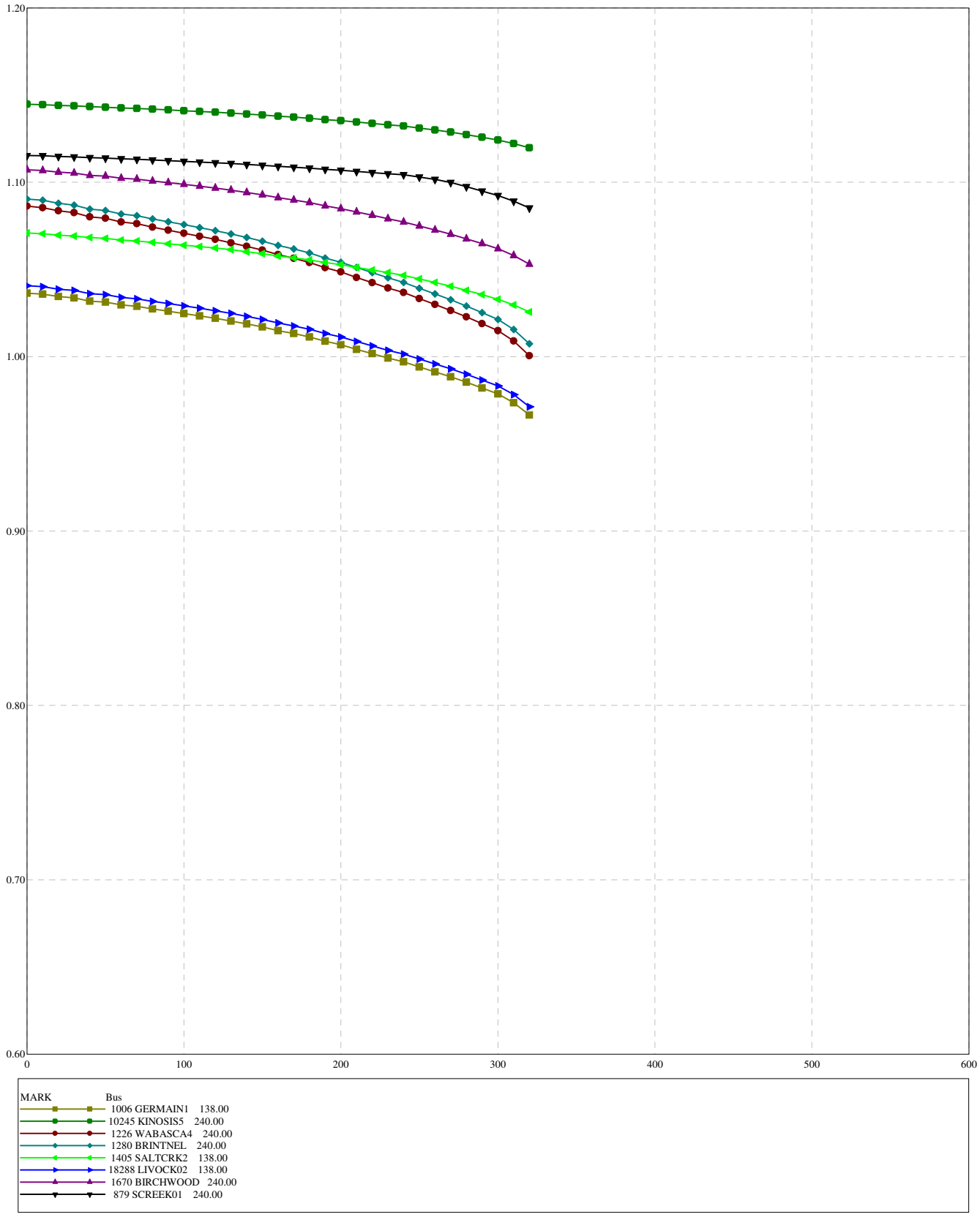

Figure F5-2015SP-1

TASMO MODEL; OUTPUT GENERATED 2010-03-01 14:45:14
SWINGBUS 1520 FOR FC-2009-5:2016-04-30:19:24--1--1-0-0
MON, AUG 08 2011 14:08

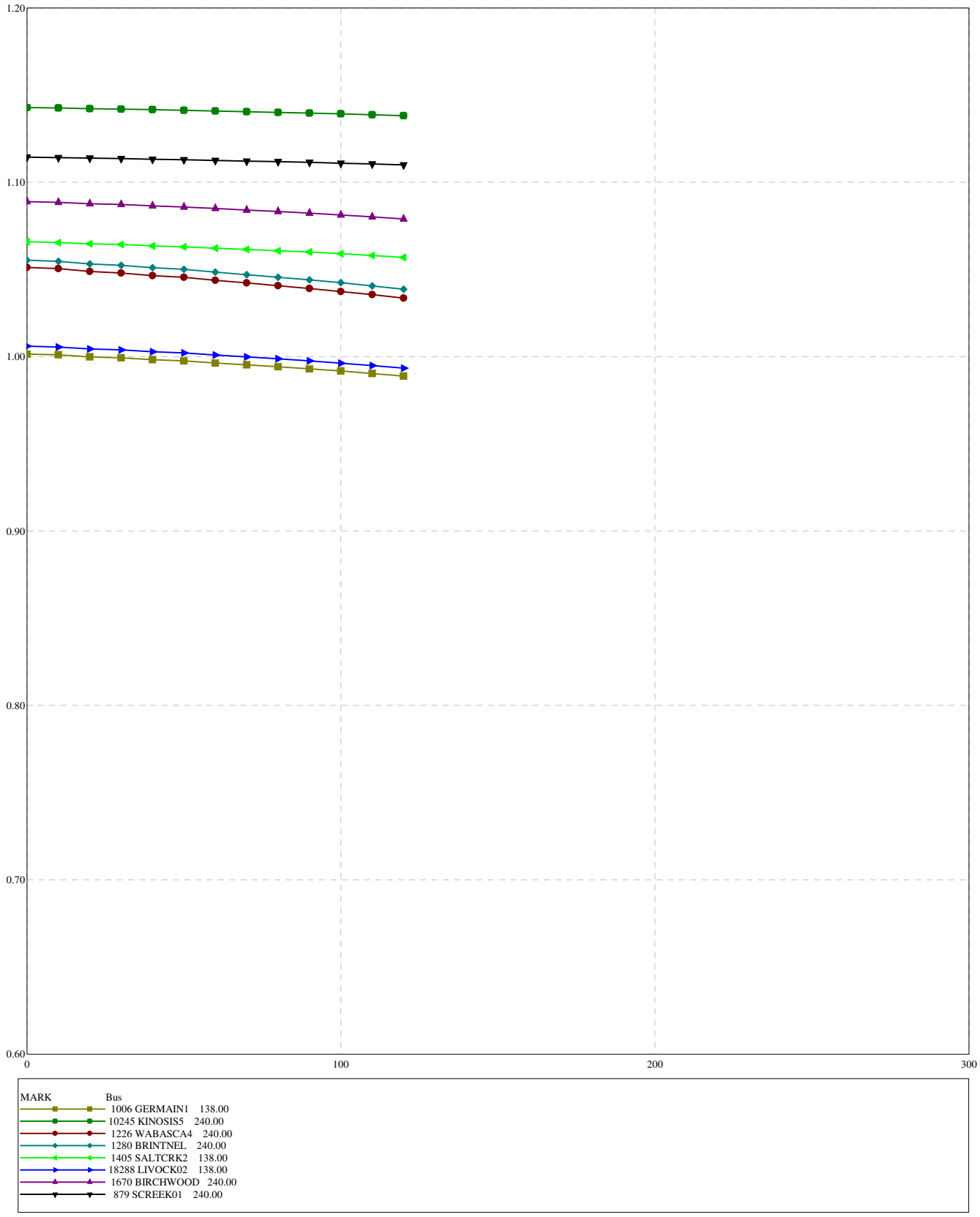

Figure F5-2015SP-2

TASMO MODEL; OUTPUT GENERATED 2010-03-01 14:45:14
SWINGBUS 1520 FOR FC-2009-5:2016-04-30:19:24--1--1-0-0
MON, AUG 08 2011 14:10

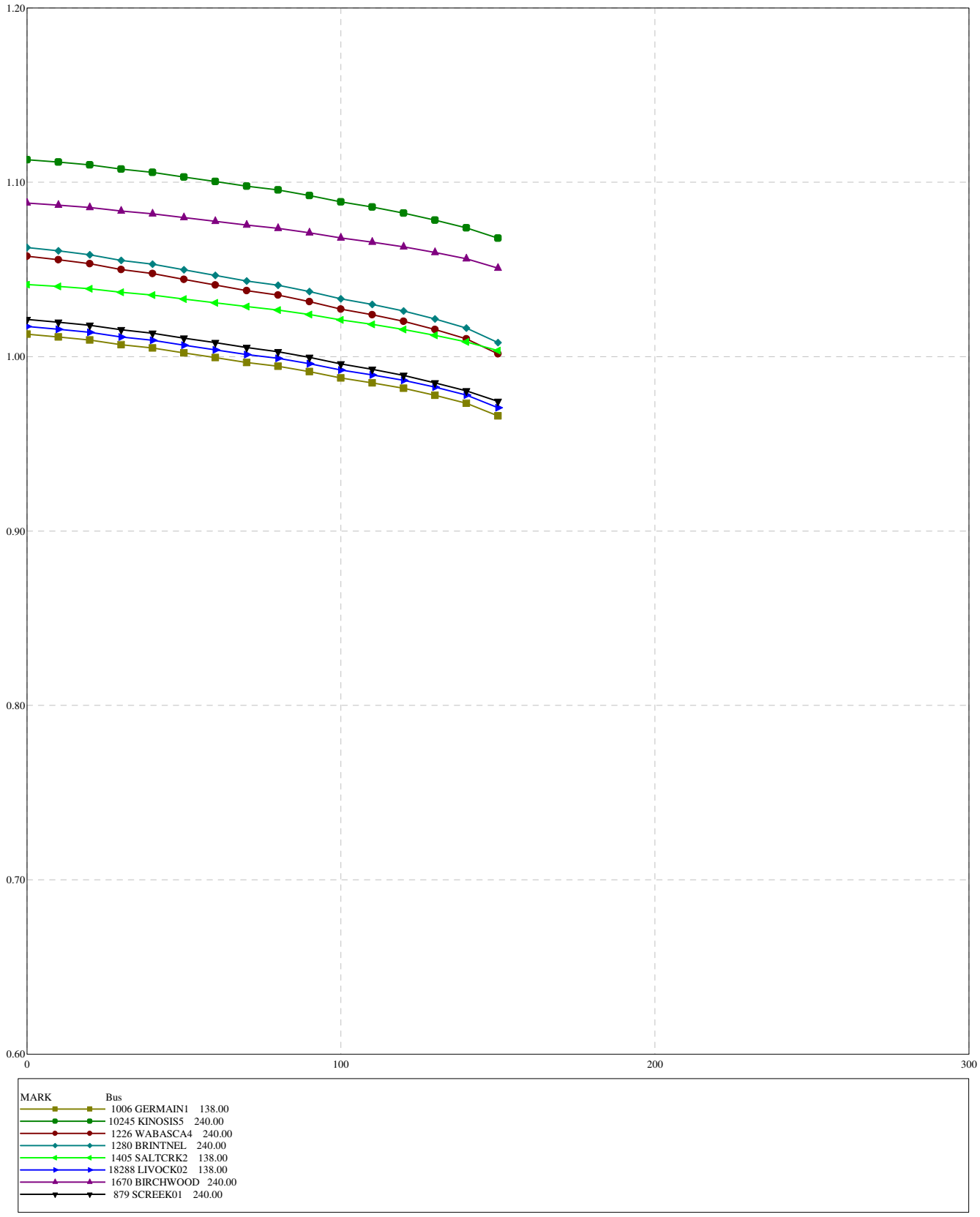

Figure F5-2015SP-3

TASMO MODEL; OUTPUT GENERATED 2010-03-01 14:45:14
SWINGBUS 1520 FOR FC-2009-5:2016-04-30:19:24--1--1-0-0
MON, AUG 08 2011 14:09

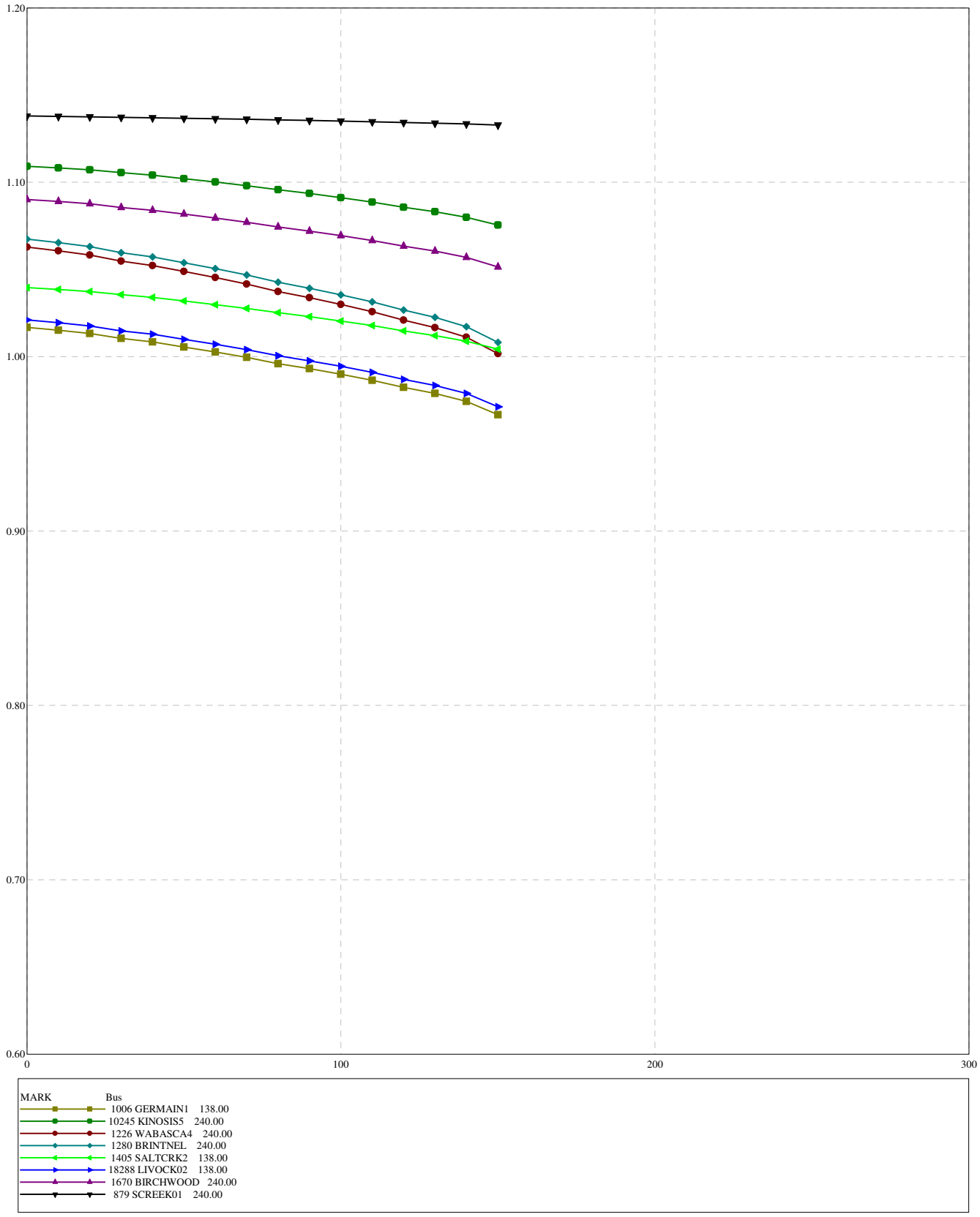

Figure F5-2015SP-4

TASMO MODEL; OUTPUT GENERATED 2010-03-01 14:45:14
SWINGBUS 1520 FOR FC-2009-5:2016-04-30:19:24--1--1-0-0
MON, AUG 08 2011 14:10

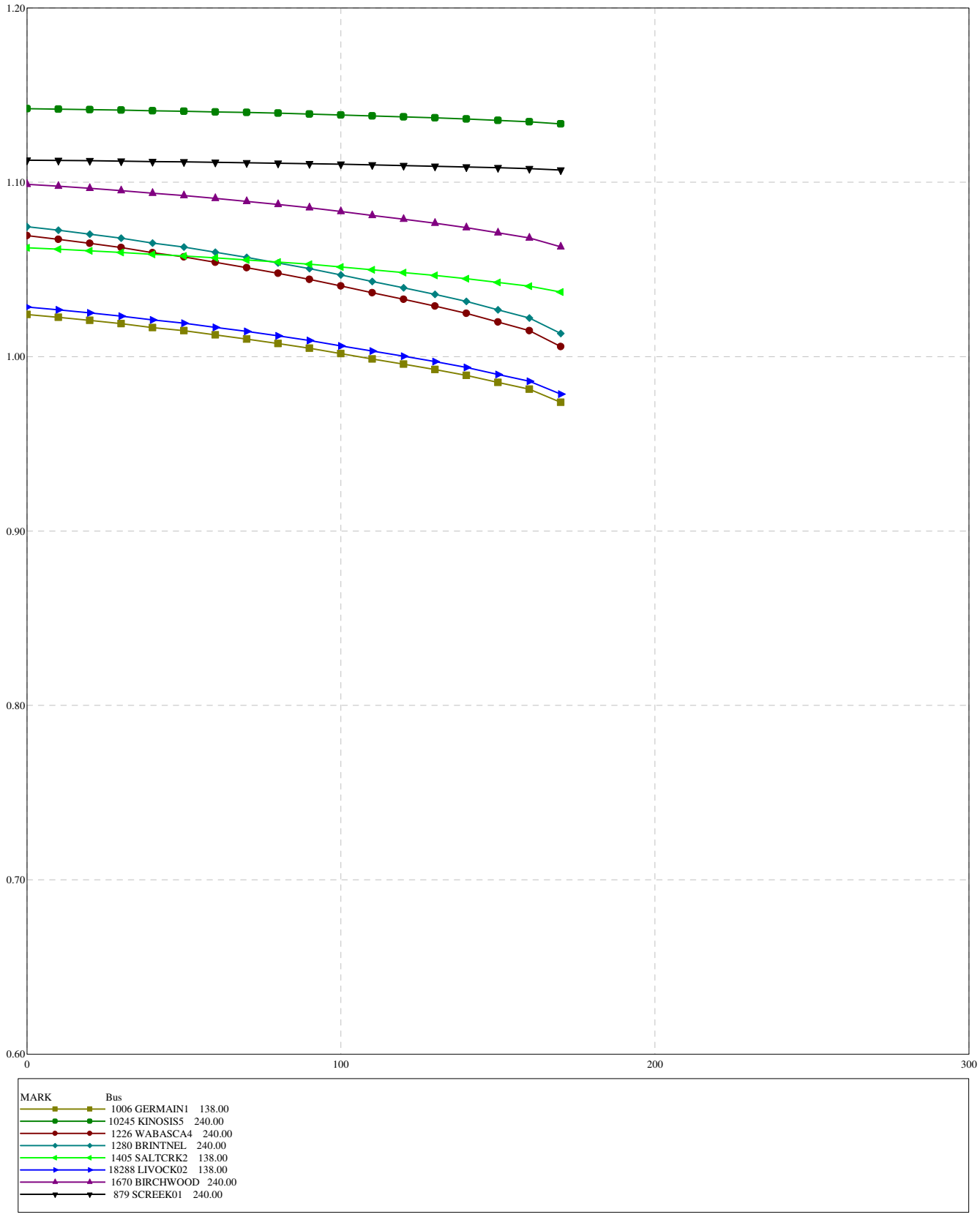

Figure F5-2015SP-5

TASMO MODEL; OUTPUT GENERATED 2010-03-01 14:45:14
SWINGBUS 1520 FOR FC-2009-5:2016-04-30:19:24--1--1-0-0
MON, AUG 08 2011 14:11

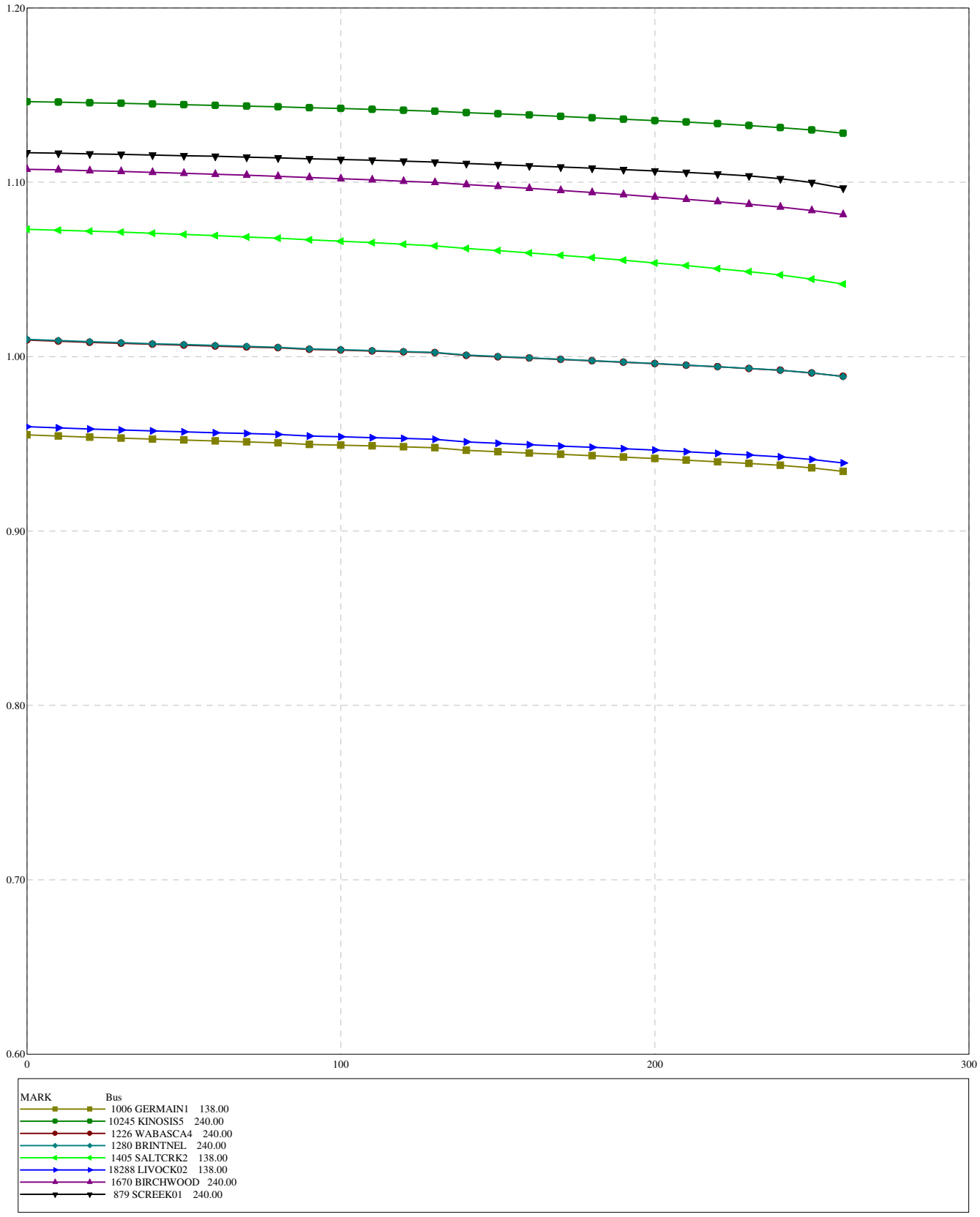

Figure F5-2015SP-6

TASMO MODEL; OUTPUT GENERATED 2010-03-01 14:45:14
SWINGBUS 1520 FOR FC-2009-5:2016-04-30:19:24--1--1-0-0
MON, AUG 08 2011 13:59

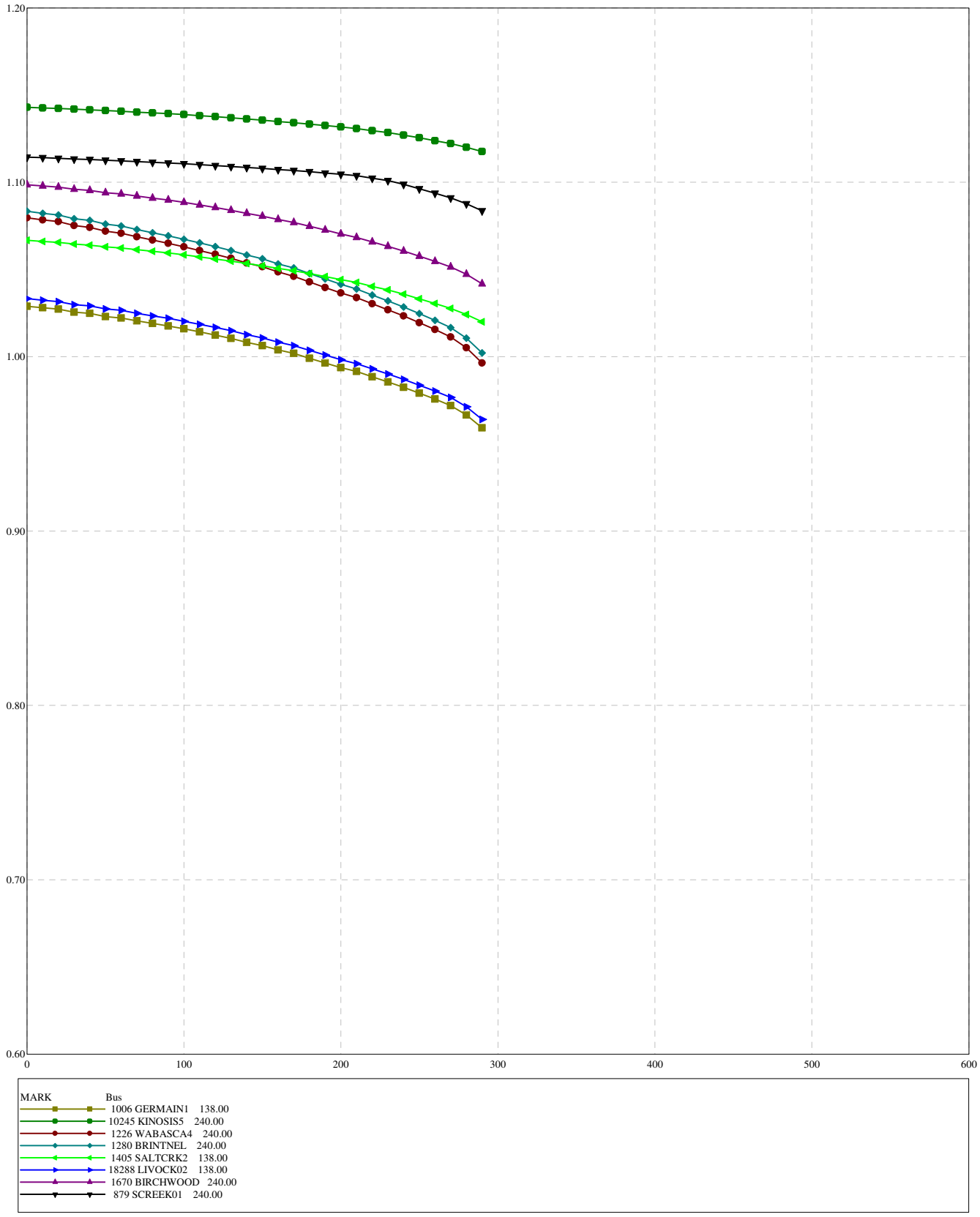

Figure F5-2015SP-7

TASMO MODEL; OUTPUT GENERATED 2010-03-01 14:45:14
SWINGBUS 1520 FOR FC-2009-5:2016-04-30:19:24--1--1-0-0
MON, AUG 08 2011 13:59

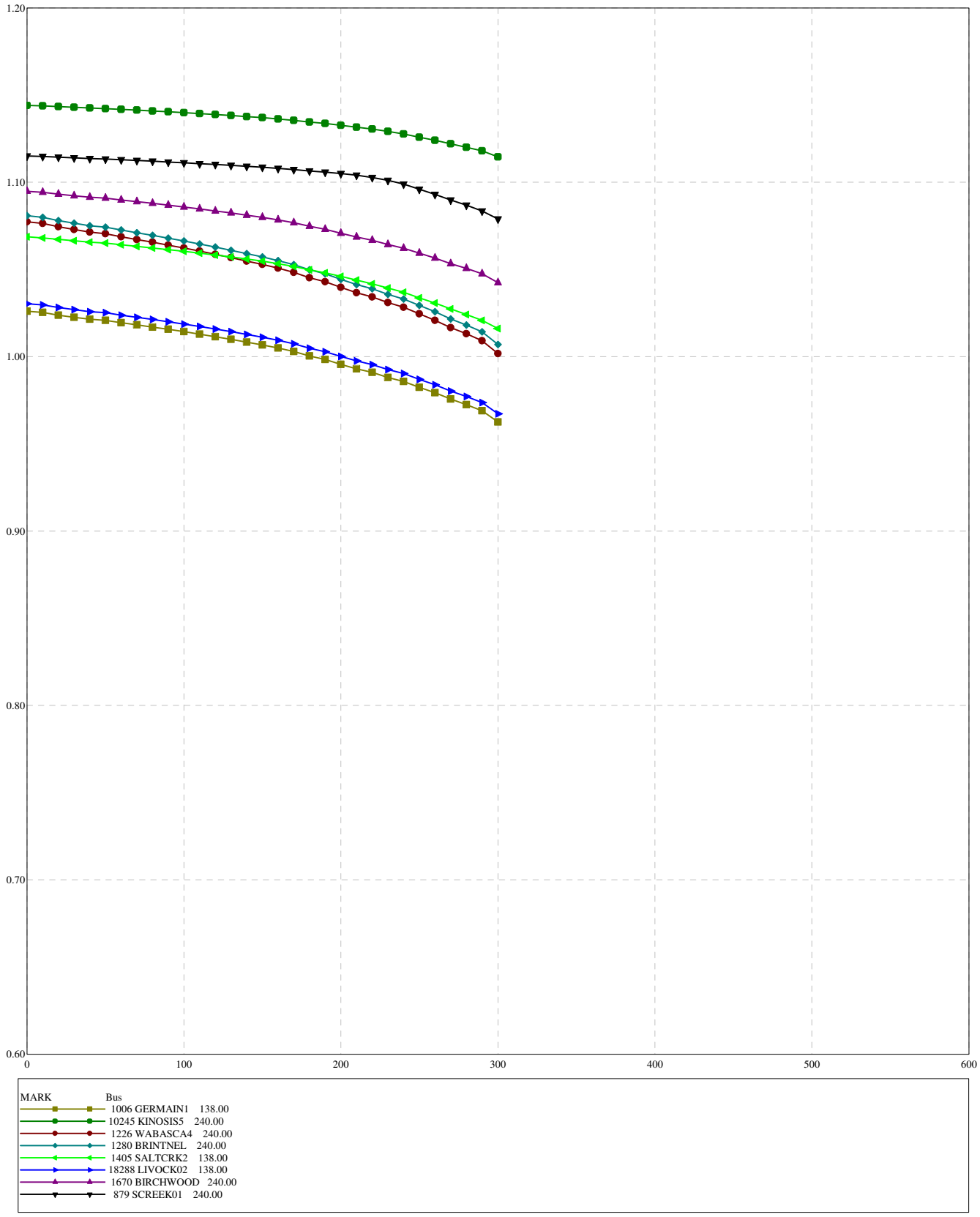

Figure F5-2015SP-8

TASMO MODEL; OUTPUT GENERATED 2010-03-01 14:45:14
SWINGBUS 1520 FOR FC-2009-5:2016-04-30:19:24--1--1-0-0
MON, AUG 08 2011 13:59

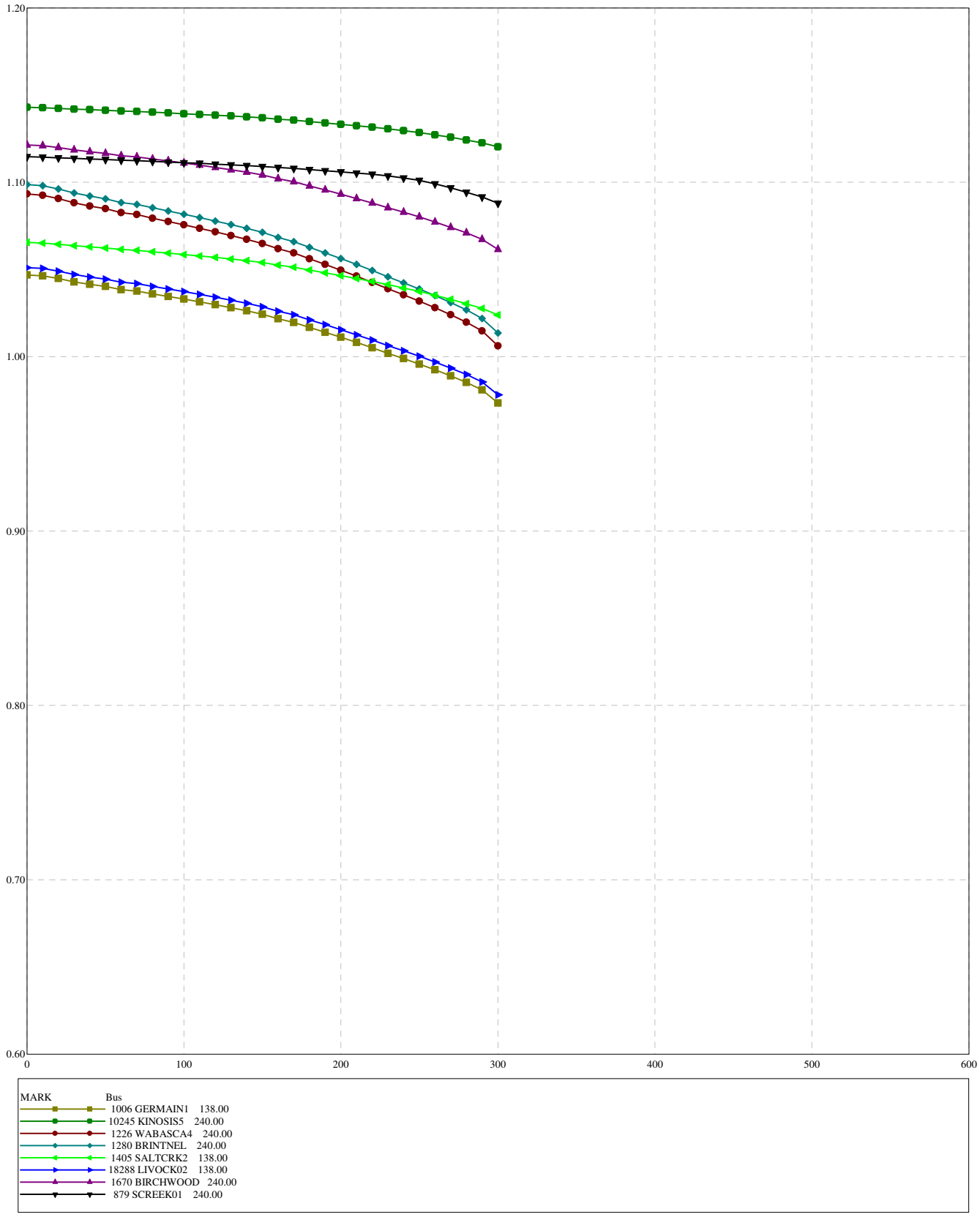

Figure F5-2015SP-9

Table F-6: P-V Analysis Summary – 2015 Winter Peak

Figure Number	System Normal and Category B Contingencies	Forecasted 2015 Winter Peak (MW)	105% Margin (MW)	Nose Point (MW)
Figure F6-2015WP-1	Base Case	2074	2178	2484
Figure F6-2015WP-2	240 kV 971L Livock 939S to Wesly Creek 834S	2074	2178	2294
Figure F6-2015WP-3	240 kV 971L Conklin 762S to Sunday Creek	2074	2178	2334
Figure F6-2015WP-4	240 kV Kinosis 856S to Leismer 72S	2074	2178	2344
Figure F6-2015WP-5	240 kV 9L930 Whitefish 825S to Leismer 72S	2074	2178	2354
Figure F6-2015WP-6	240 kV 9L57 Livock 939S to Birchwood 960S	2074	2178	2384
	Category C5 Contingencies	**Forecasted 2015 Winter Peak (MW)**	**102.5% Margin (MW)**	**Maximum Operating Limit (MW)**
Figure F6-2015WP-7	9L08 9L09, Dover 888S to Ells River 2079S and Joslyn 849S Double Circuit 240 kV Lines	2074	2126	2344
Figure F6-2015WP-8	9L76 9L09, Joslyn 849S to Ells River 2079S and Dover 888S Double Circuit 240 kV Lines	2074	2126	2424
Figure F6-2015WP-9	9L01 9L58, Dover 888S to Ruth Lake 848S Double Circuit 240 kV Lines	2074	2126	2474

TASMO MODEL; OUTPUT GENERATED 2010-03-01 14:45:14
SWINGBUS 1520 FOR FC-2009-5:2016-04-30:19:24--1--1-0-0
FRI, JUN 24 2011 11:27

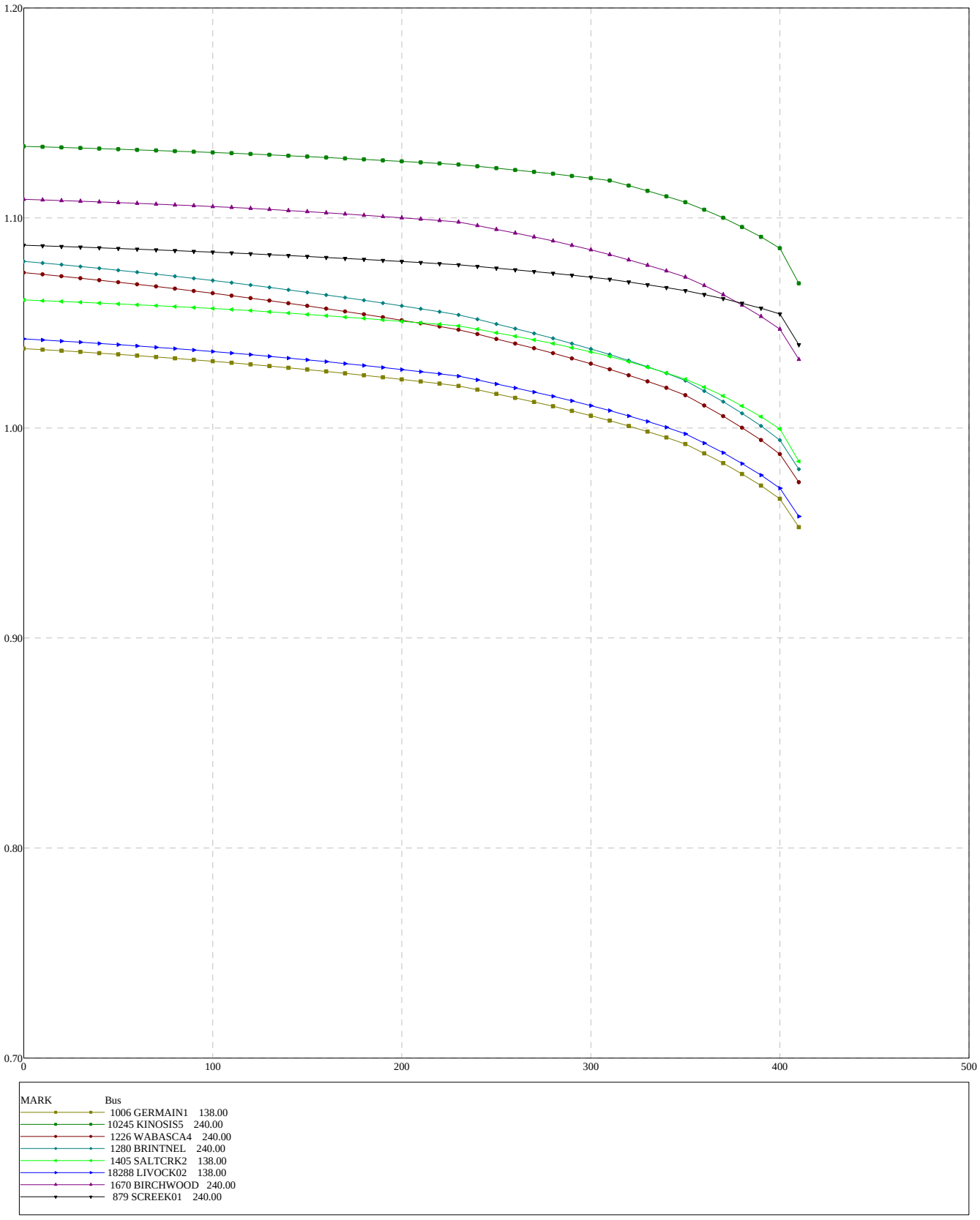

Figure F6-2015WP-1

TASMO MODEL; OUTPUT GENERATED 2010-03-01 14:45:14
SWINGBUS 1520 FOR FC-2009-5:2016-04-30:19:24--1--1-0-0
FRI, JUN 24 2011 11:28

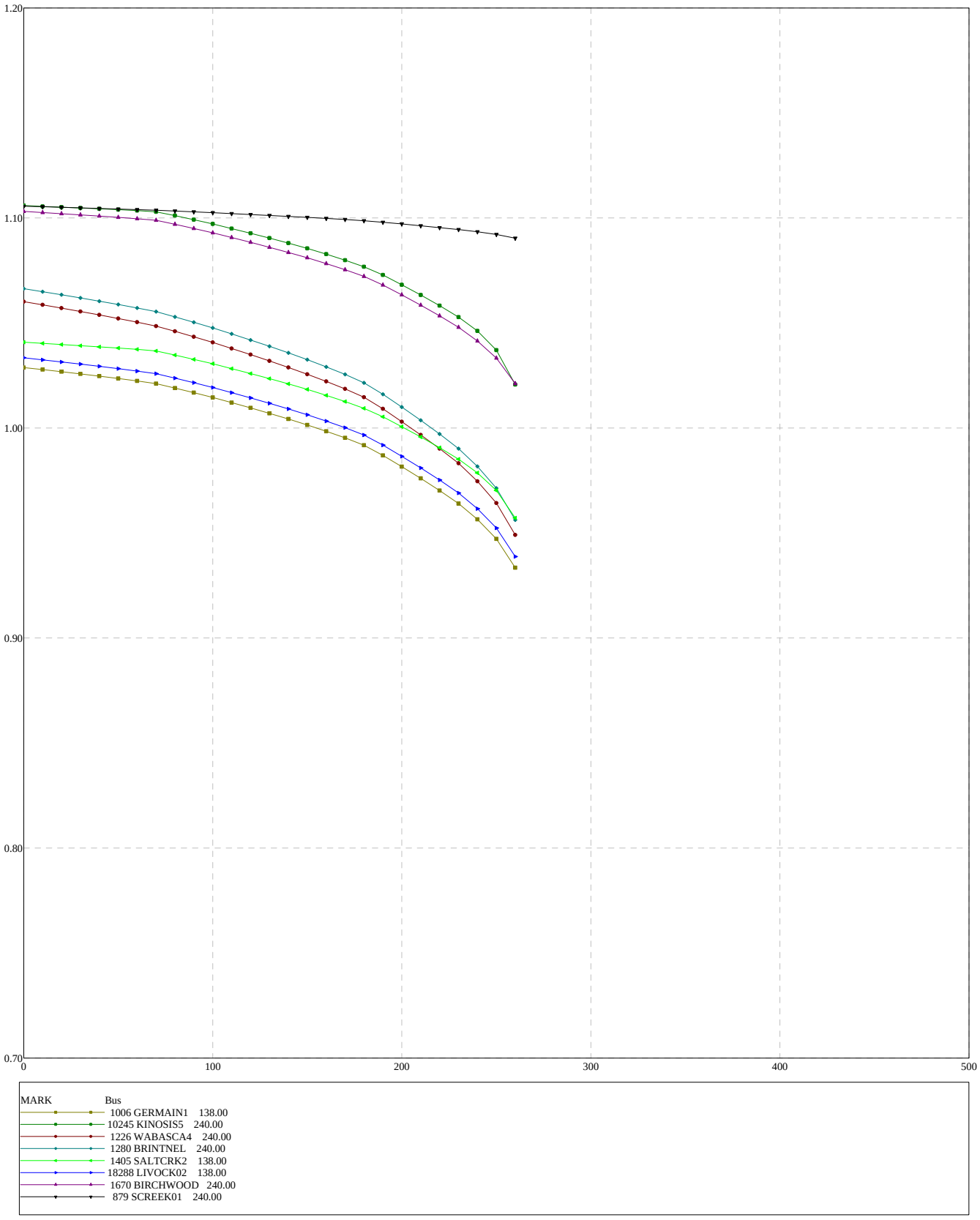

Figure F6-2015WP-2

TASMO MODEL; OUTPUT GENERATED 2010-03-01 14:45:14
SWINGBUS 1520 FOR FC-2009-5:2016-04-30:19:24--1--1-0-0
FRI, JUN 24 2011 11:28

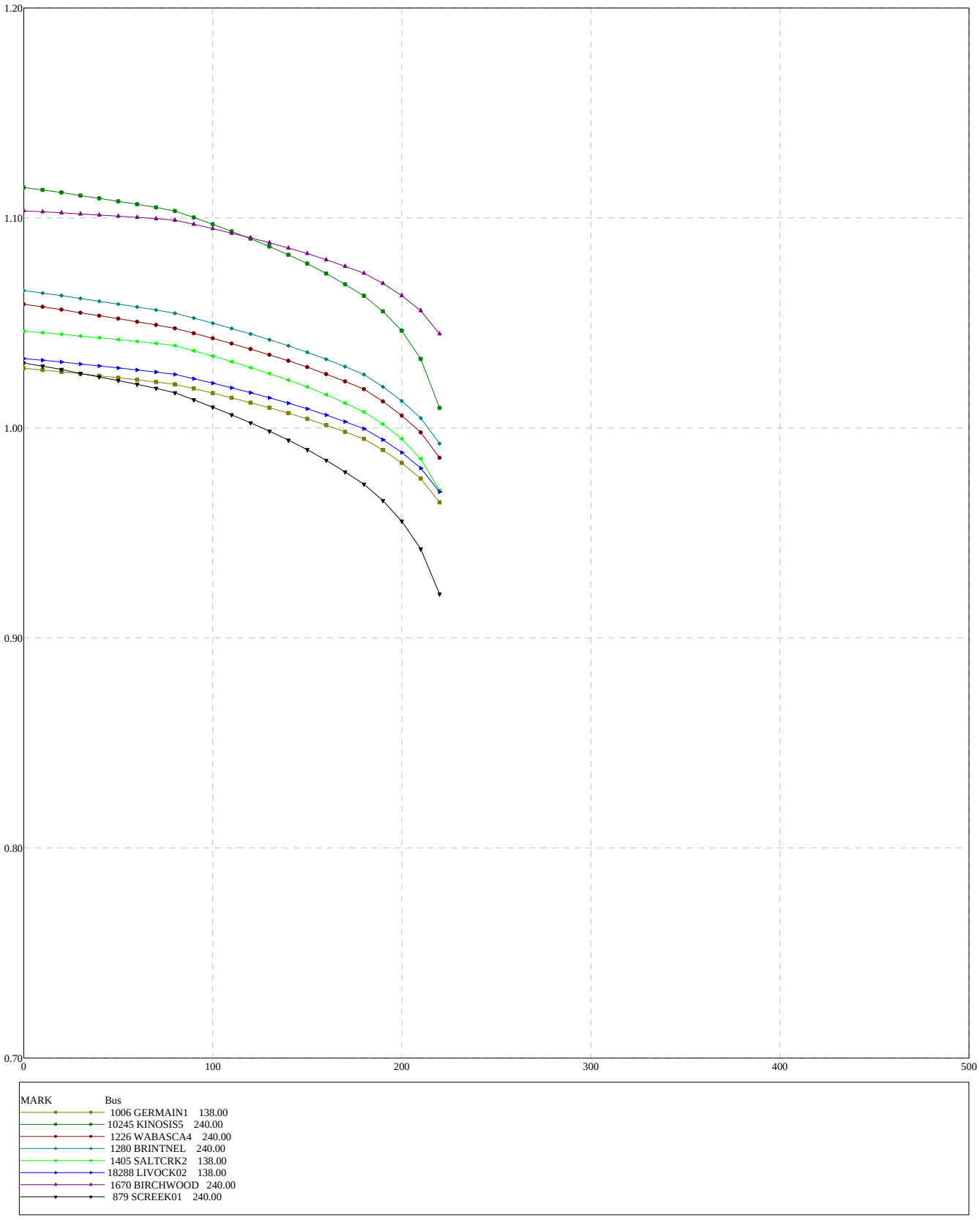

Figure F6-2015WP-3

TASMO MODEL; OUTPUT GENERATED 2010-03-01 14:45:14
SWINGBUS 1520 FOR FC-2009-5:2016-04-30:19:24--1--1-0-0
FRI, JUN 24 2011 11:30

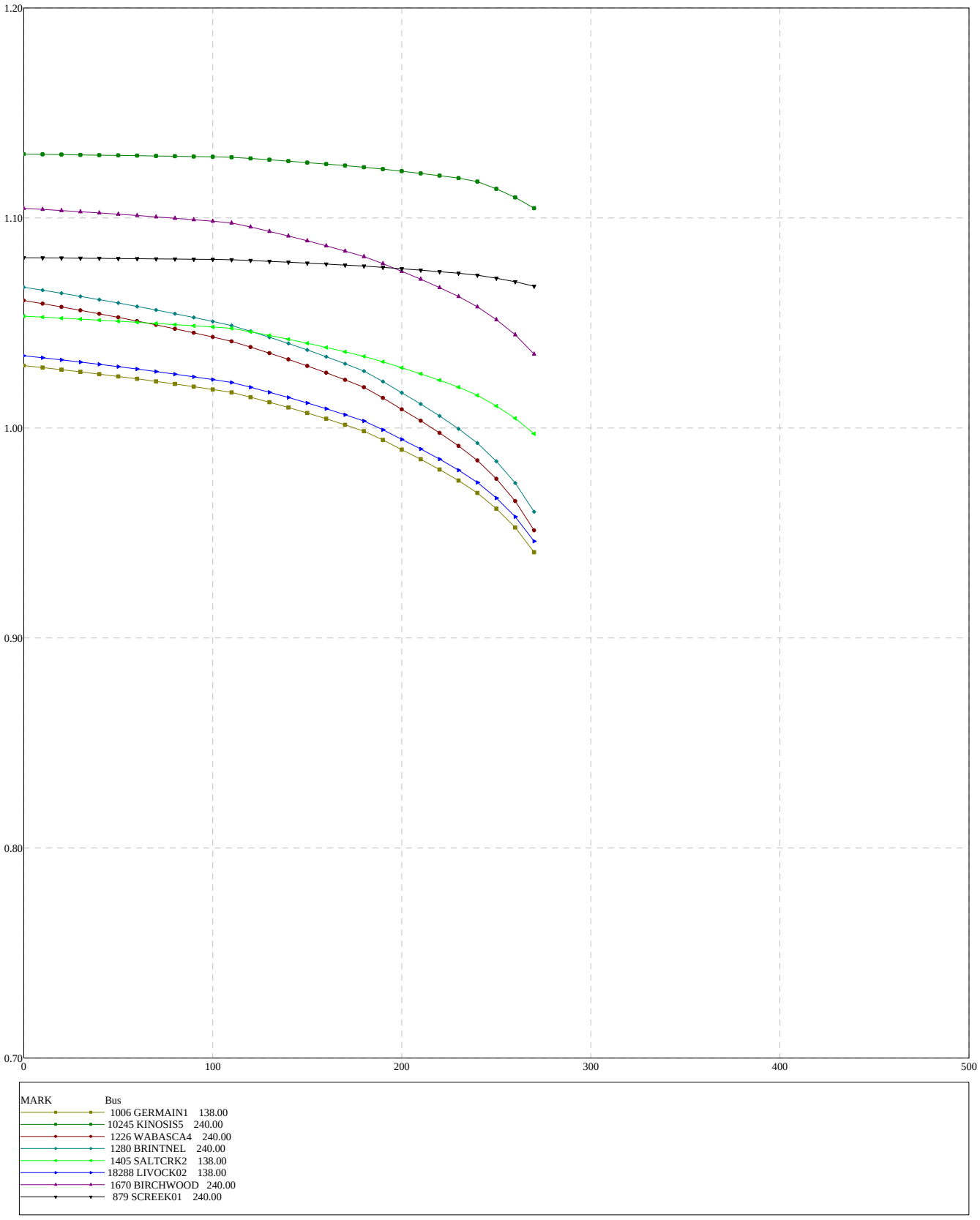

Figure F6-2015WP-4

TASMO MODEL; OUTPUT GENERATED 2010-03-01 14:45:14
SWINGBUS 1520 FOR FC-2009-5:2016-04-30:19:24--1--1-0-0
FRI, JUN 24 2011 11:31

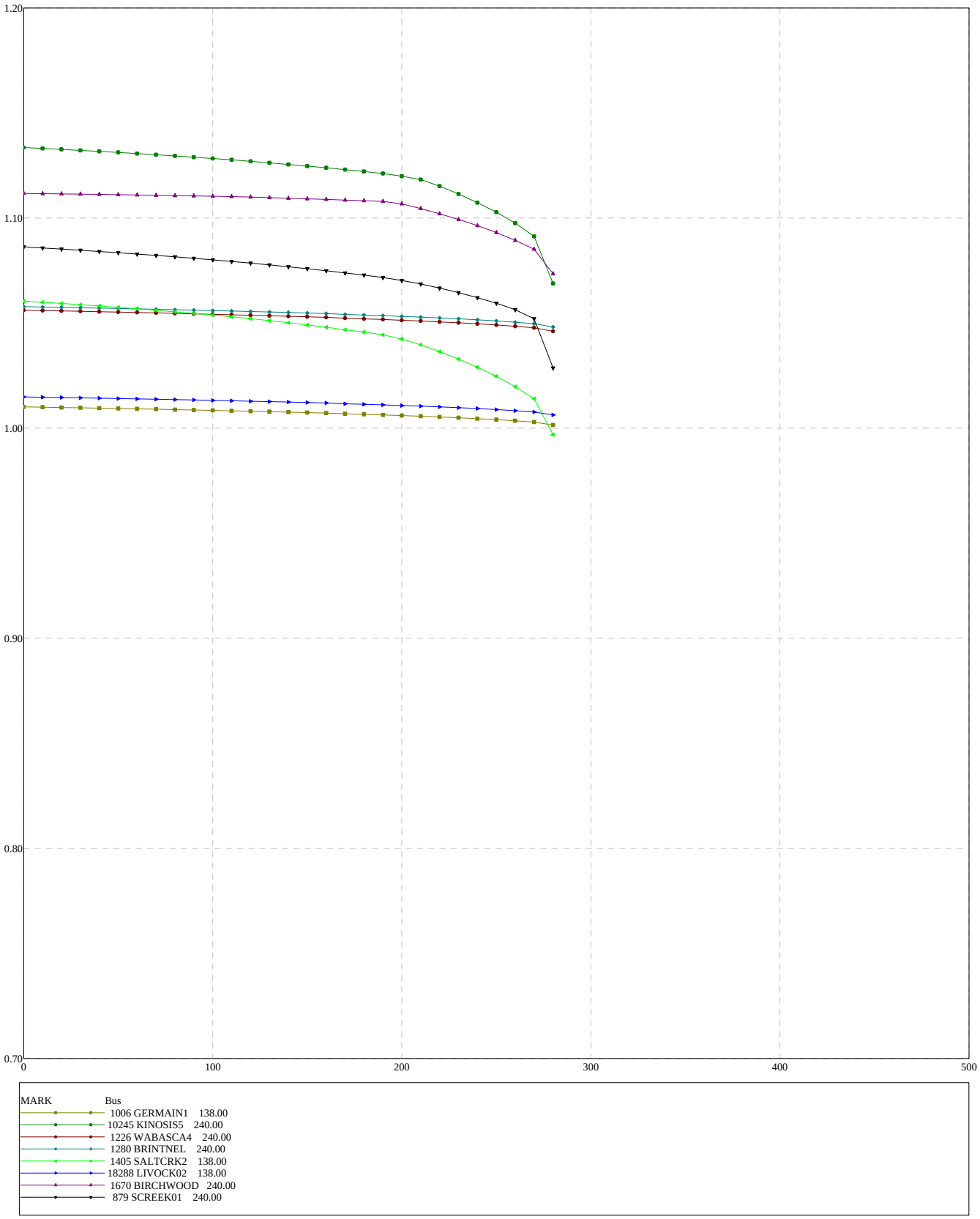

Figure F6-2015WP-5

TASMO MODEL; OUTPUT GENERATED 2010-03-01 14:45:14
SWINGBUS 1520 FOR FC-2009-5:2016-04-30:19:24--1--1-0-0
FRI, JUN 24 2011 11:33

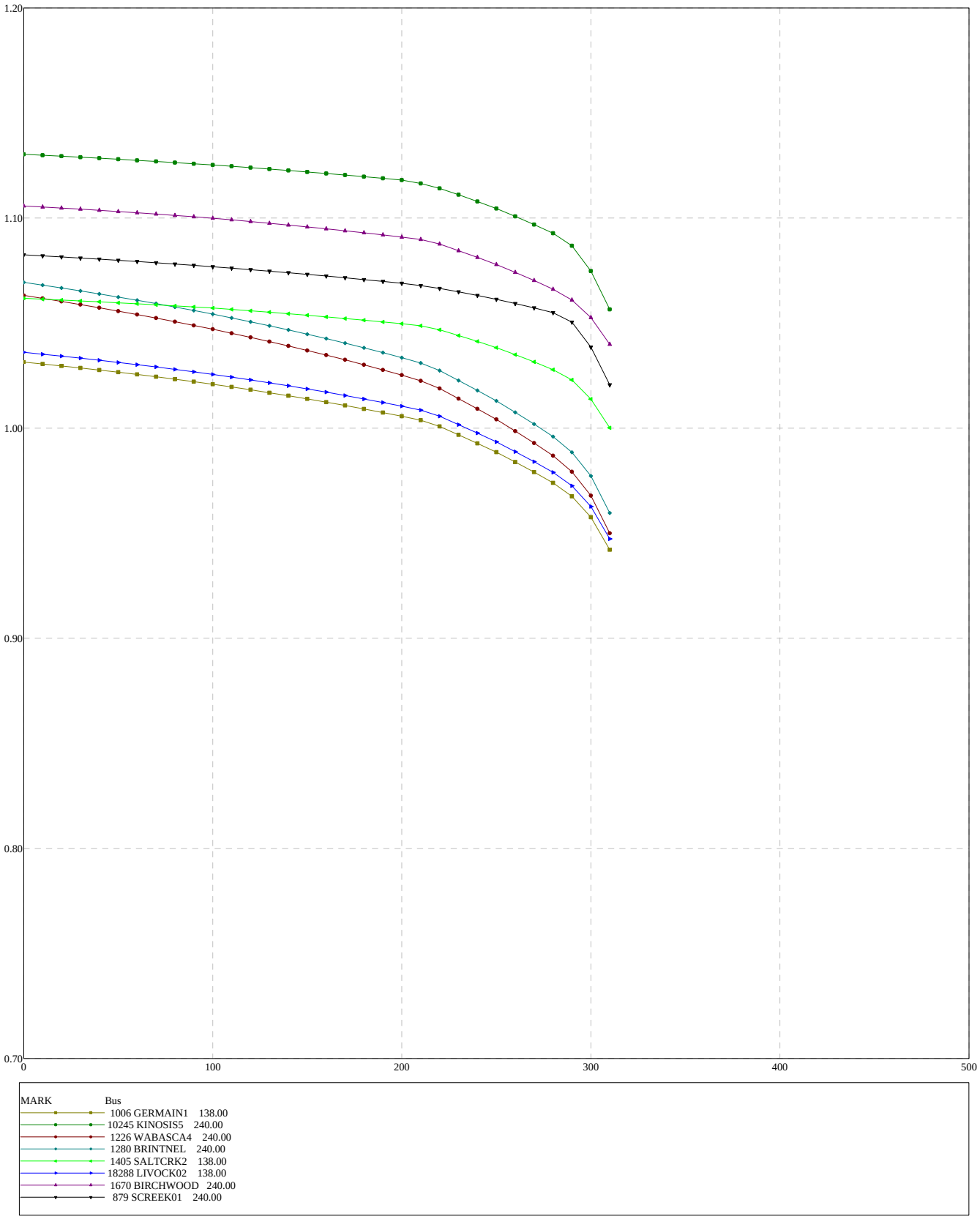

Figure F6-2015WP-6

TASMO MODEL; OUTPUT GENERATED 2010-03-01 14:45:14
SWINGBUS 1520 FOR FC-2009-5:2016-04-30:19:24--1--1-0-0
FRI, JUN 24 2011 11:34

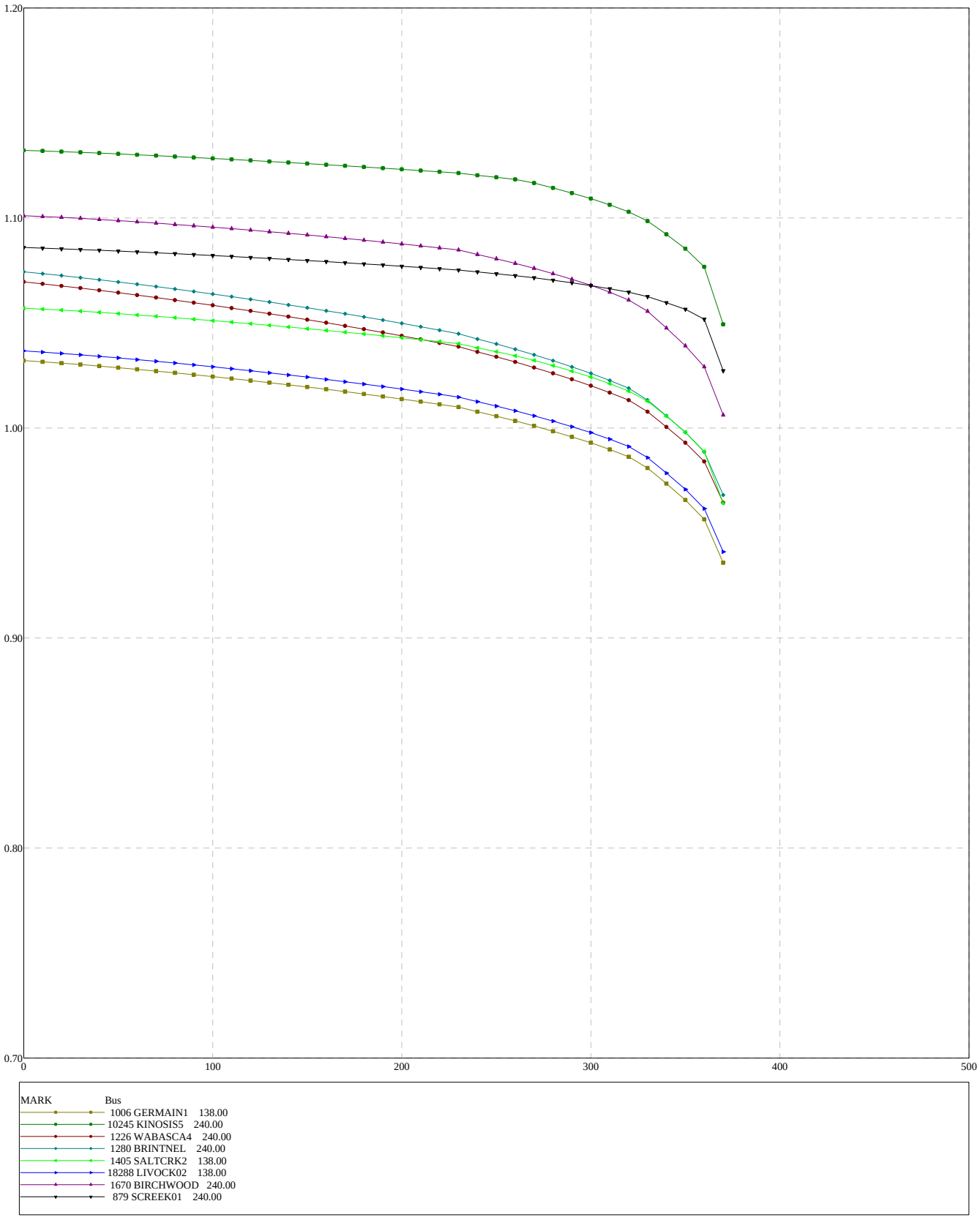

Figure F6-2015WP-7

TASMO MODEL; OUTPUT GENERATED 2010-03-01 14:45:14
SWINGBUS 1520 FOR FC-2009-5:2016-04-30:19:24--1--1-0-0
FRI, JUN 24 2011 11:35

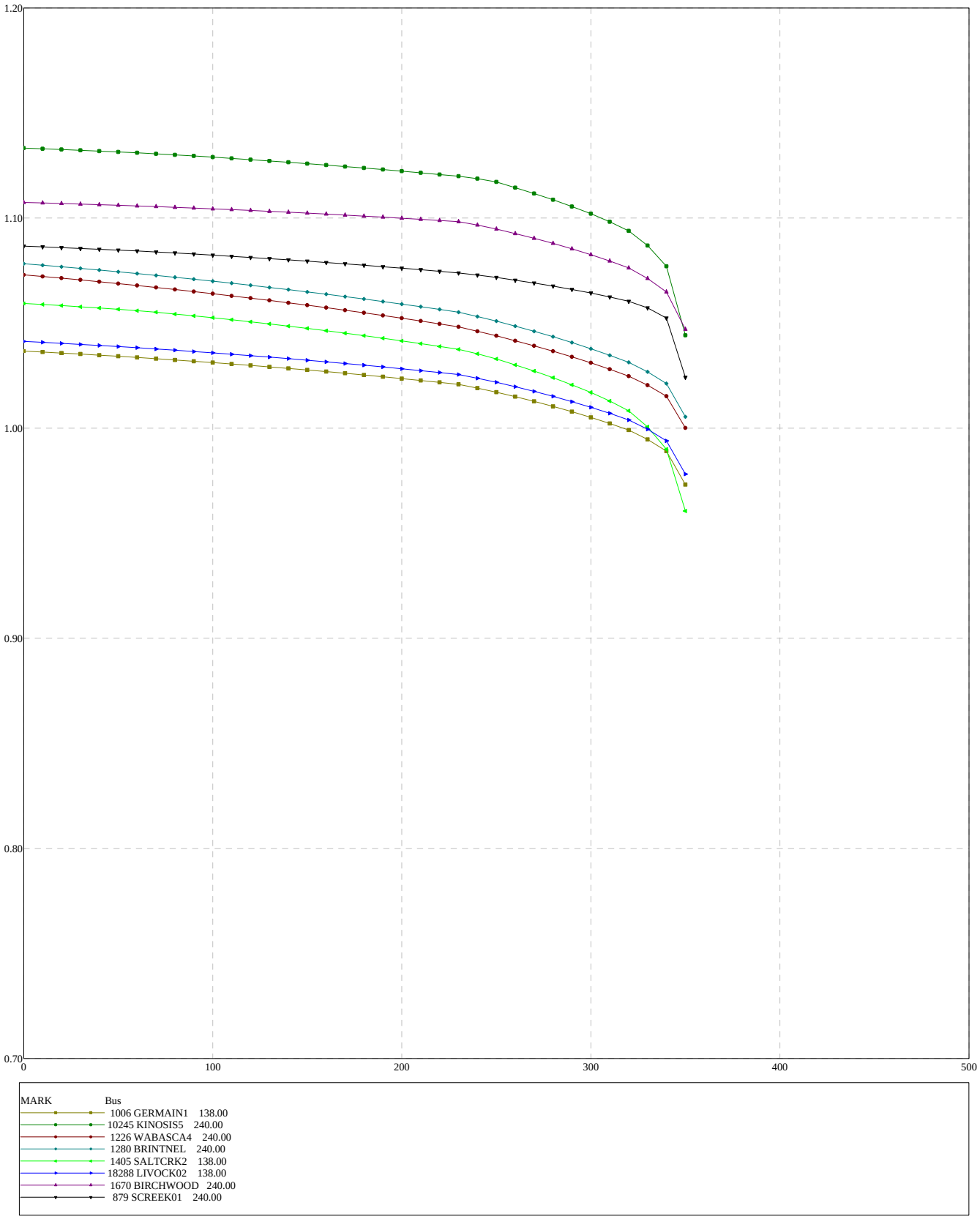

Figure F6-2015WP-8

TASMO MODEL; OUTPUT GENERATED 2010-03-01 14:45:14
SWINGBUS 1520 FOR FC-2009-5:2016-04-30:19:24--1--1-0-0
FRI, JUN 24 2011 11:35

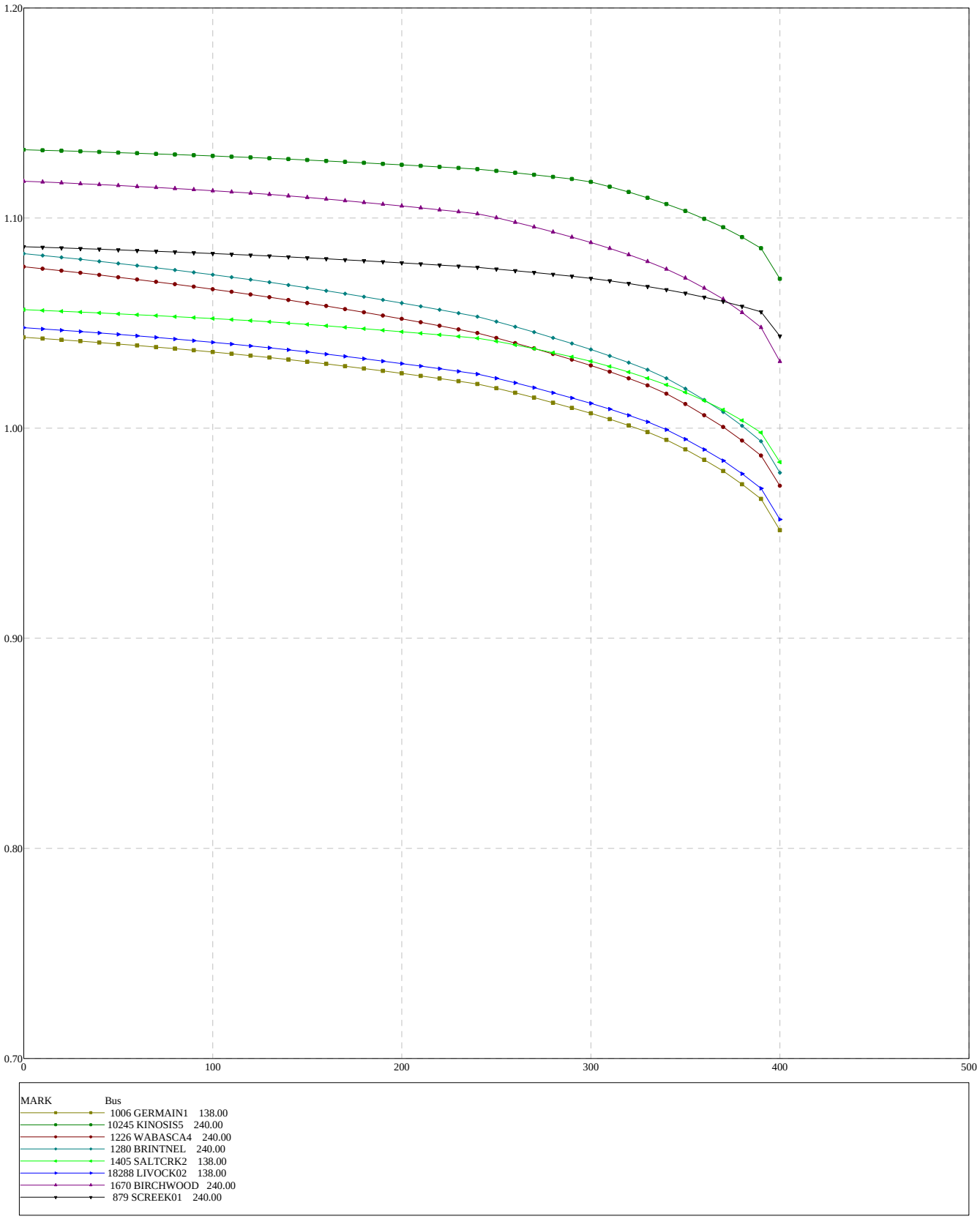

Figure F6-2015WP-9

ATTACHMENT G
Long Term Power Flow Analysis

Table G-1 Power Flow Analysis Summary- 2020 Summer Peak with NW FMM

Figure Game	Contingency	Thermal Violation	Voltage Violation
Figure G-2020SP-1	Base Case (N - 0)	None	None
Figure G-2020SP-2	Open 9L56 240kV line (WABASCA 720S to Brintnell 876S)	None	None
Figure G-2020SP-3	Open 9L15 240kV line (Wesley Creek 834S to Livock 939S)	None	None
Figure G-2020SP-4	Open 9L10 240kV line (Brintnell 876S to Livock 939S)	None	None
Figure G-2020SP-5	Open 9L57 240kV line (Livock 939S to Birchwood Creek 960S)	None	None
Figure G-2020SP-6	Open 9L74 240kV line (Birchwood Creek 960S to Dover 888S)	None	None
Figure G-2020SP-7	Open 9L95 240kV line (Birchwood Creek 960S to EllsRiver)	None	None
Figure G-2020SP-8	Open 9L09 240kV line (Dover 888S to Joslyn Creek 849S)	None	None
Figure G-2020SP-9	Open 9L08 240kV line (Ells River to to Dover 888S)	None	None
Figure G-2020SP-10	Open 9L76 240kV line (Ells River to Joslyn Creek 849S)	None	None
Figure G-2020SP-11	Open 9L32 240kV line (Joslyn Creek 849S to Bitumont 941S)	None	None
Figure G-2020SP-12	Open 9L01 240kV line (Dover 888S to Ruth Lake 848S)	None	None
Figure G-2020SP-13	Open 9L18 and 9L23 240kV line (Ruth Lake 848S to Salt Creek 977S)	None	None
Figure G-2020SP-14	Open 9L990 240kV line (Salt Creek 977S to Kinosis 856S)	None	None
Figure G-2020SP-15	Open 9L990 240kV line (Kinosis 856S to Leismer 72S)	None	None
Figure G-2020SP-16	Open 9L930 240kV line (Leismer 72S to Whitefish Lake 825S)	None	None
Figure G-2020SP-17	Open 9L22 240kV line (Whitefish Lake 825S to Heart Lake 898S)	None	None
Figure G-2020SP-18	Open 9L47 240kV line (Heart Lake 898S to RoundHill POD)	None	None
Figure G-2020SP-19	Open 9L55 240kV line (RoundHill POD to McMillan 885S)	None	None
Figure G-2020SP-20	Open 9L07 240kV line (McMillan 885S TO Dover 888S)	None	None

Figure G-2020SP-21	Open 9L58 240kV line (Ruth Lake 848S to Thickwood 951S)	None	None
Figure G-2020SP-22	Open 9L68 240kV line (Thickwood 951S TO Dover 888S)	None	None
Figure G-2020SP-23	Open 9L30 240kV line (McMillan 885S TO Dover 888S)	None	None
Figure G-2020SP-24	Open 500kV line (Thickwood 951S TO Genesee)	None	None

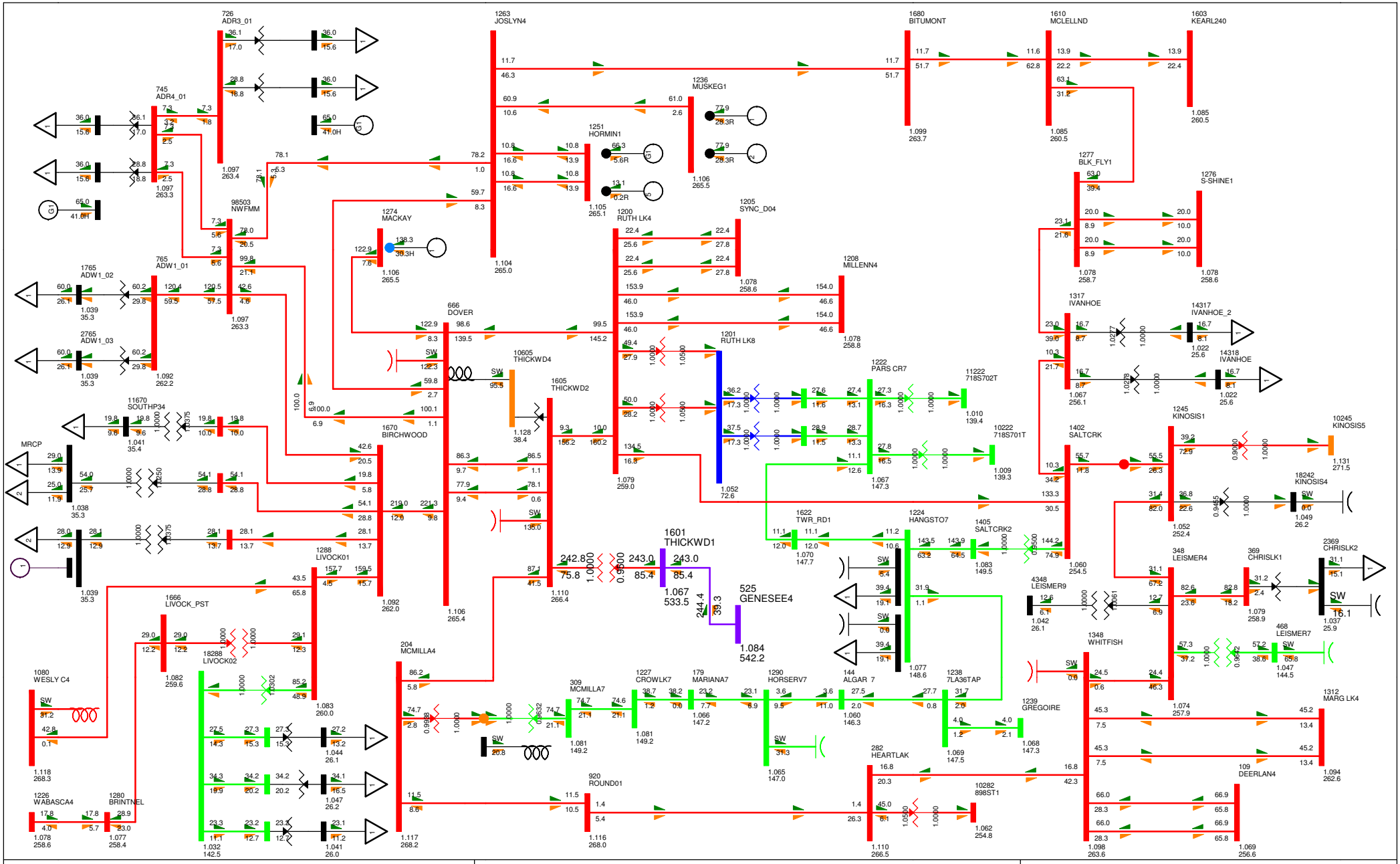
726 ADR3_01
745 ADR4_01
765 ADW1_01
1765 ADW1_02
2765 ADW1_03
98503 NWFMM
1263 JOSLYN4
1680 BITUMONT
1610 MCLELLND
1603 KEARL240
1236 MUSKEG1
1251 HORMIN1
1277 BLK_FLY1
1276 S-SHINE1
1274 MACKAY
1200 RUTH LK4
1205 SYNC_D04
1208 MILLENN4
1317 IVANHOE
14317 IVANHOE_2
14318 IVANHOE
666 DOVER
1201 RUTH LK8
1222 PARS CR7
11222 718S702T
10222 718S701T
10605 THICKWD4
1605 THICKWD2
1670 BIRCHWOOD
11670 SOUTHP34
MRCP
1402 SALTCRK
1245 KINOSIS1
10245 KINOSIS5
18242 KINOSIS4
1622 TWR_RD1
1224 HANGSTO7
1405 SALTCRK2
1601 THICKWD1
525 GENESEE4
1288 LIVOCK01
1666 LIVOCK_PST
18288 LIVOCK02
348 LEISMER4
4348 LEISMER9
369 CHRISLK1
2369 CHRISLK2
468 LEISMER7
1348 WHITFISH
1239 GREGOIRE
1312 MARG LK4
109 DEERLAN4
204 MCMILLA4
309 MCMILLA7
1227 CROWLK7
179 MARIANA7
1290 HORSERV7
144 ALGAR 7
1238 7LA36TAP
282 HEARTLAK
10282 898ST1
920 ROUND01
1080 WESLY C4
1226 WABASCA4
1280 BRINTNEL
BC - Alberta (IMPORT)777.0 MW
TASMO MODEL; OUTPUT GENERATED 2010-03-01 14:16:46
SWINGBUS 1520 FOR FC-2009-5-2020-10-31:14:14--1--1-0-0
FRI, AUG 12 2011 14:29
2020 NW FMM STUDY
Figure G-2020SP-1
Bus - VOLTAGE (kV/PU)
Branch - MW/Mvar
Equipment - MW/Mvar
100.0%RATEA
1.120OV 0.950UV
kV: <=34.500 <=69.000 <=138.000 <=240.000 <=500.000 >500.000

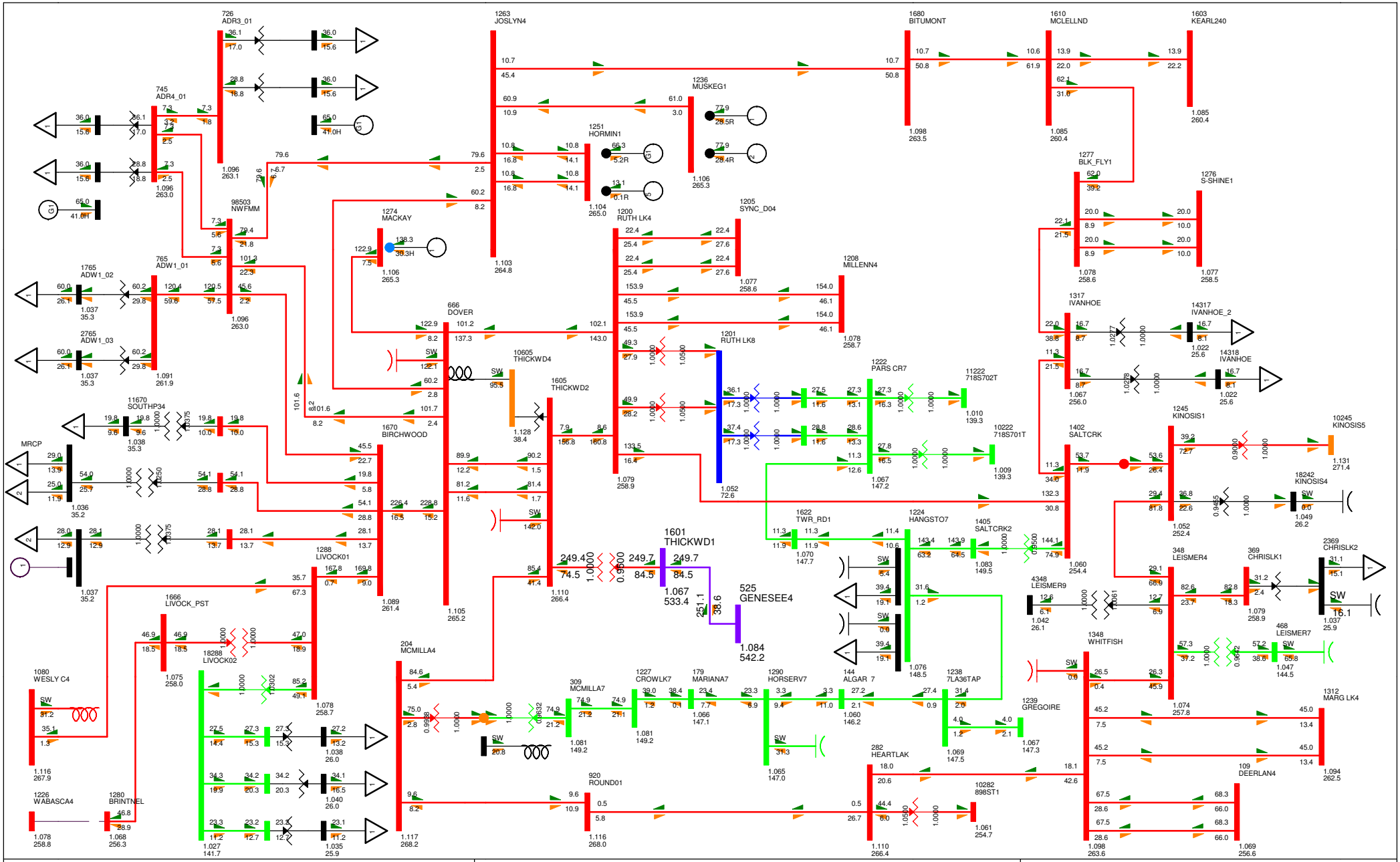

BC - Alberta (IMPORT)777.3 MW

TASMO MODEL; OUTPUT GENERATED 2010-03-01 14:16:46
SWINGBUS 1520 FOR FC-2009-S-2020-10-31:14:14--1--1-0-0
FRI, AUG 12 2011 14:29

2020 NW FMM STUDY

Figure G-2020SP-2

Bus - VOLTAGE (kV/PU)
Branch - MW/Mvar
Equipment - MW/Mvar
100.0%RATEA
1.120OV 0.950UV
kV: <=34.500 <=69.000 <=138.000 <=240.000 <=500.000 >500.000

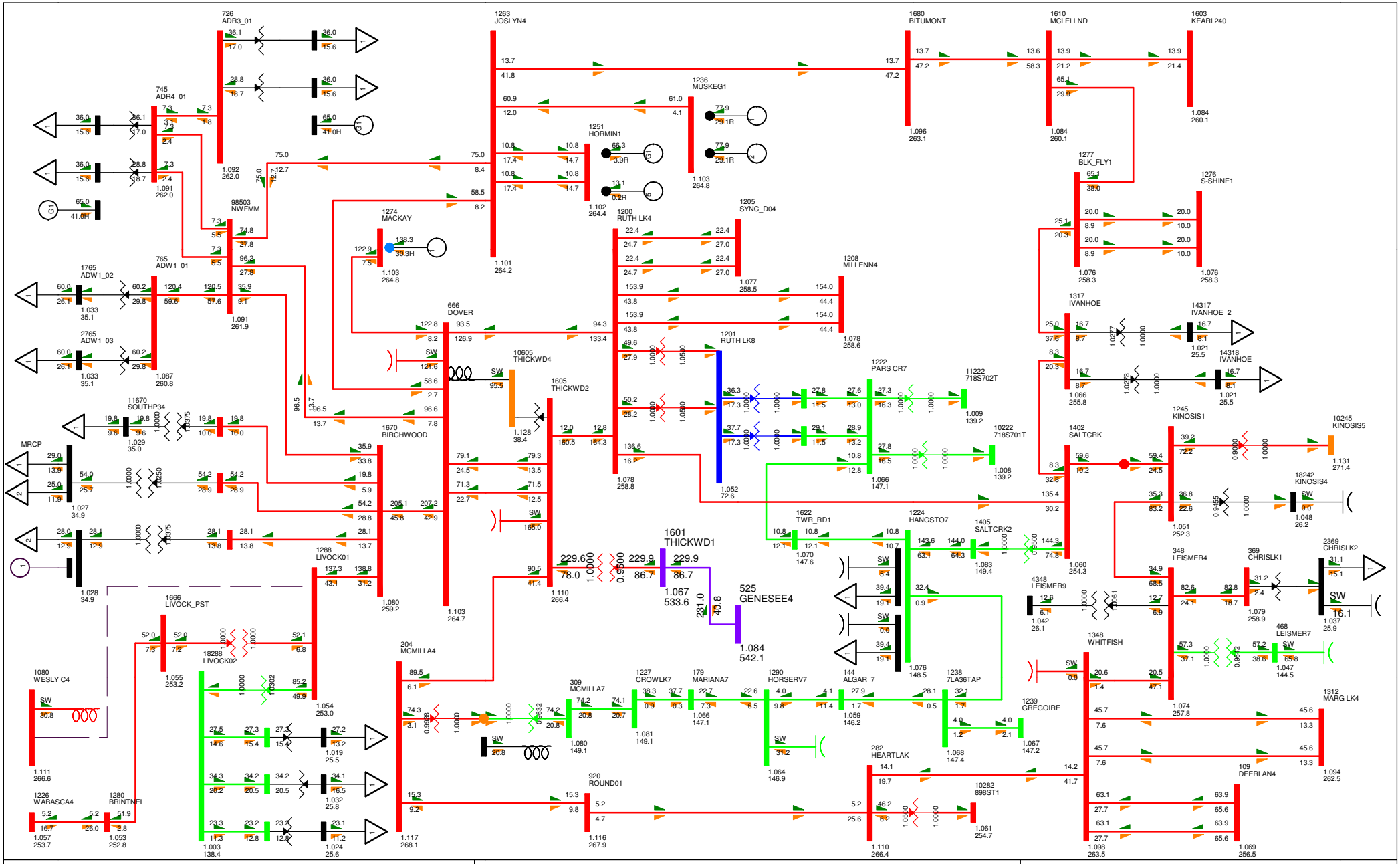
726 ADR3_01
745 ADR4_01
765 ADW1_01
1765 ADW1_02
2765 ADW1_03
98503 NWFMM
1263 JOSLYN4
1680 BITUMONT
1610 MCLELLND
1603 KEARL240
1236 MUSKEG1
1251 HORMIN1
1277 BLK_FLY1
1276 S-SHINE1
1274 MACKAY
1200 RUTH LK4
1205 SYNC_D04
1208 MILLENN4
1317 IVANHOE
14317 IVANHOE_2
14318 IVANHOE
666 DOVER
1201 RUTH LK8
1222 PARS CR7
11222 718S702T
10222 718S701T
10605 THICKWD4
1605 THICKWD2
1670 BIRCHWOOD
11670 SOUTHP34
MRCP
1402 SALTCRK
1245 KINOSIS1
10245 KINOSIS5
18242 KINOSIS4
1622 TWR_RD1
1224 HANGSTO7
1405 SALTCRK2
1601 THICKWD1
525 GENESEE4
1288 LIVOCK01
1666 LIVOCK_PST
18288 LIVOCK02
348 LEISMER4
369 CHRISLK1
2369 CHRISLK2
4348 LEISMER9
468 LEISMER7
1348 WHITFISH
1239 GREGOIRE
1312 MARG LK4
109 DEERLAN4
204 MCMILLA4
309 MCMILLA7
1227 CROWLK7
179 MARIANA7
1290 HORSERV7
144 ALGAR 7
1238 7LA36TAP
282 HEARTLAK
920 ROUND01
10282 898ST1
1080 WESLY C4
1226 WABASCA4
1280 BRINTNEL
BC - Alberta (IMPORT)780.1 MW
TASMO MODEL; OUTPUT GENERATED 2010-03-01 14:16:46
SWINGBUS 1520 FOR FC-2009-S-2020-10-31:14:14--1--1-0-0
FRI, AUG 12 2011 14:29
2020 NW FMM STUDY
Figure G-2020SP-3
Bus - VOLTAGE (kV/PU)
Branch - MW/Mvar
Equipment - MW/Mvar
100.0%RATEA
1.120OV 0.950UV
kV: <=34.500 <=69.000 <=138.000 <=240.000 <=500.000 >500.000

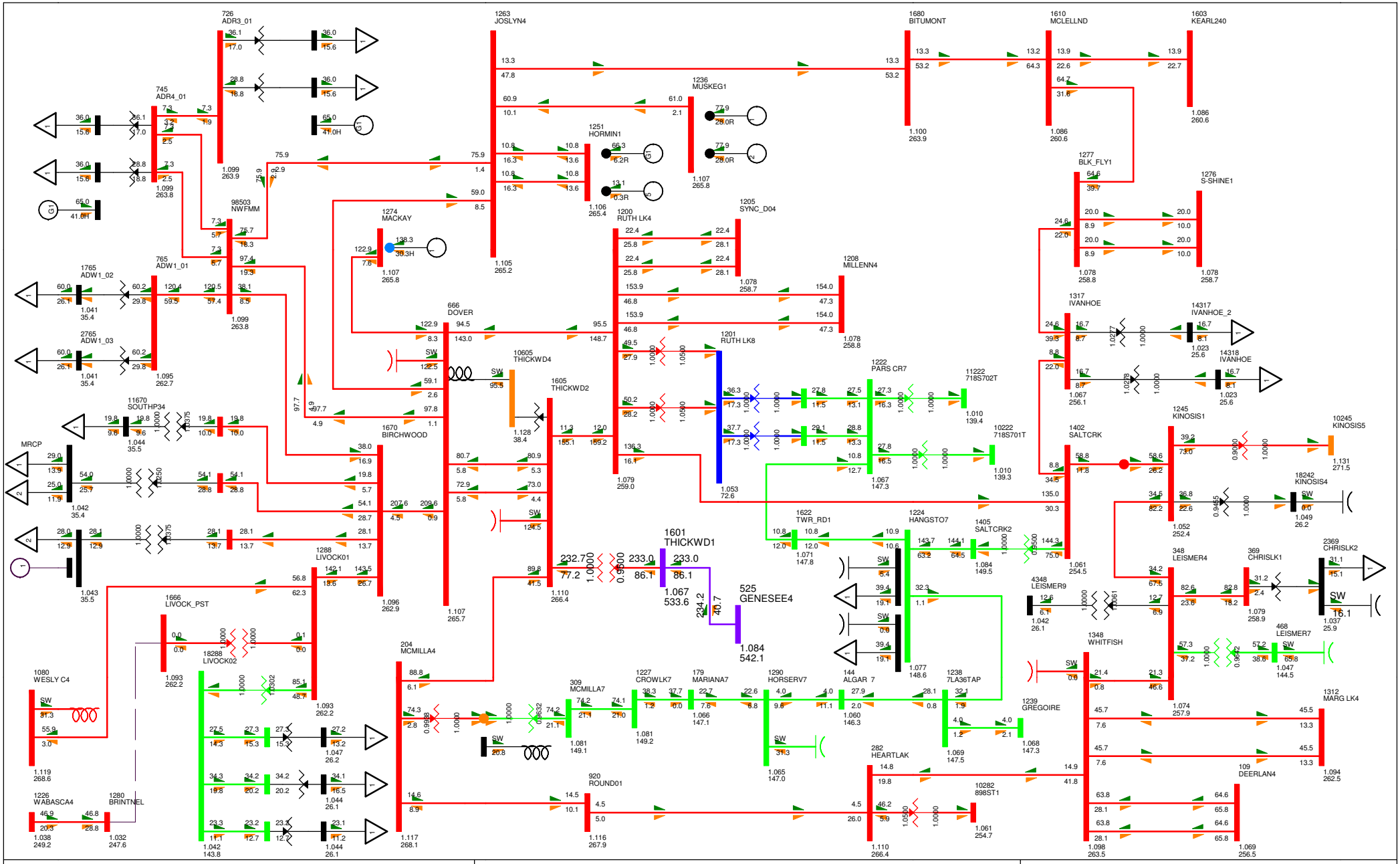
726 ADR3_01
745 ADR4_01
765 ADW1_01
1765 ADW1_02
2765 ADW1_03
98503 NWFMM
1263 JOSLYN4
1680 BITUMONT
1610 MCLELLND
1603 KEARL240
1236 MUSKEG1
1251 HORMIN1
1277 BLK_FLY1
1276 S-SHINE1
1274 MACKAY
1200 RUTH LK4
1205 SYNC_D04
1208 MILLENN4
1317 IVANHOE
14317 IVANHOE_2
14318 IVANHOE
666 DOVER
1201 RUTH LK8
1222 PARS CR7
11222 718S702T
10222 718S701T
10605 THICKWD4
1605 THICKWD2
1670 BIRCHWOOD
11670 SOUTHP34
MRCP
1622 TWR_RD1
1224 HANGSTO7
1405 SALTCRK2
1402 SALTCRK
1245 KINOSIS1
10245 KINOSIS5
18242 KINOSIS4
1601 THICKWD1
525 GENESEE4
1084 542.1
1288 LIVOCK01
1666 LIVOCK_PST
18288 LIVOCK02
204 MCMILLA4
309 MCMILLA7
1227 CROWLK7
179 MARIANA7
1290 HORSERV7
144 ALGAR 7
1238 7LA36TAP
1239 GREGOIRE
282 HEARTLAK
920 ROUND01
10282 898ST1
1348 WHITFISH
348 LEISMER4
4348 LEISMER9
369 CHRISLK1
2369 CHRISLK2
468 LEISMER7
1312 MARG LK4
109 DEERLAN4
1080 WESLY C4
1226 WABASCA4
1280 BRINTNEL
1032 247.6
BC - Alberta (IMPORT)778.0 MW
TASMO MODEL; OUTPUT GENERATED 2010-03-01 14:16:46
SWINGBUS 1520 FOR FC-2009-S-2020-10-31:14:14--1--1-0-0
FRI, AUG 12 2011 14:29
2020 NW FMM STUDY
Figure G-2020SP-4
Bus - VOLTAGE (kV/PU)
Branch - MW/Mvar
Equipment - MW/Mvar
100.0%RATEA
1.120OV 0.950UV
kV: <=34.500 <=69.000 <=138.000 <=240.000 <=500.000 >500.000

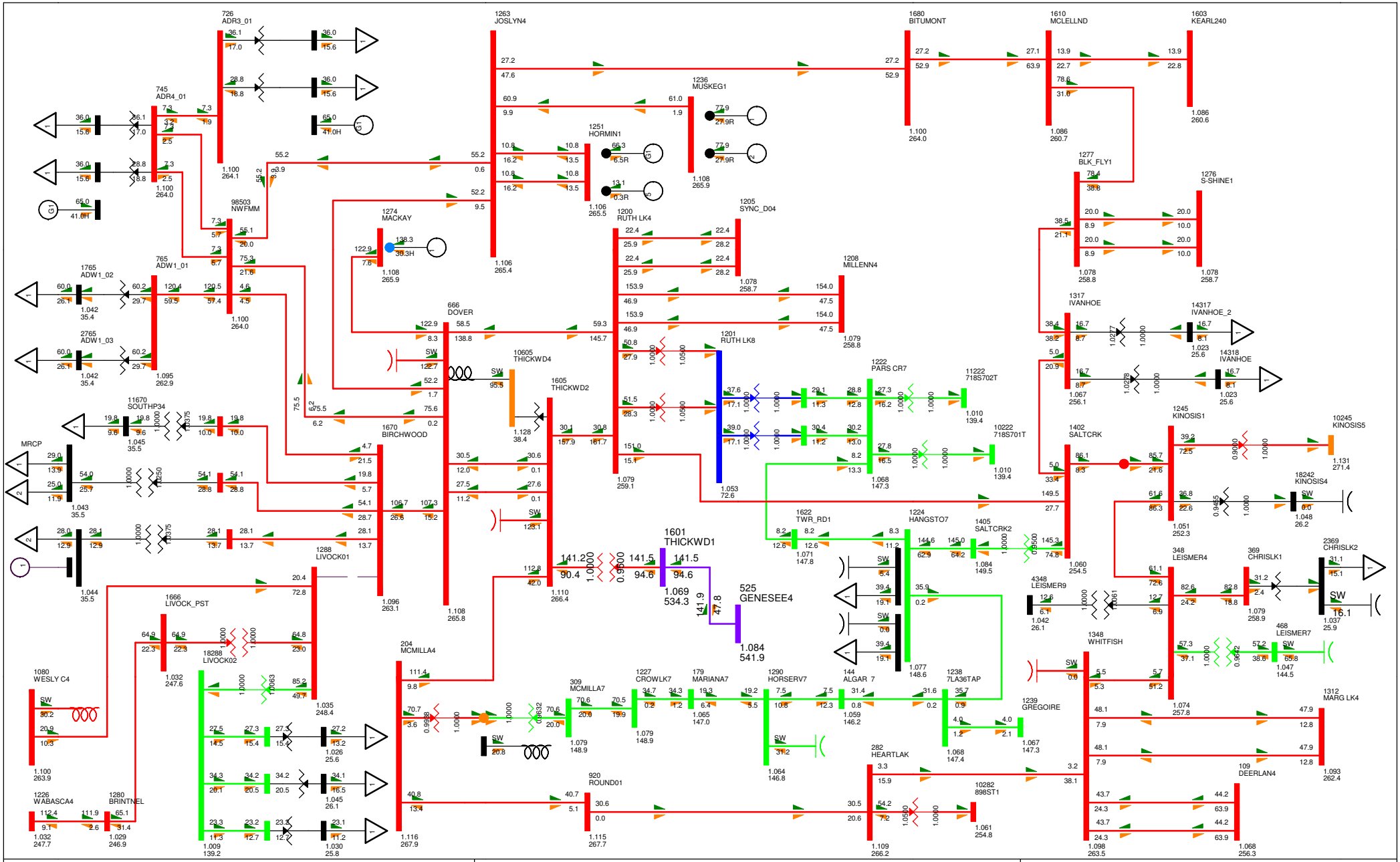

BC - Alberta (IMPORT)794.3 MW

TASMO MODEL; OUTPUT GENERATED 2010-03-01 14:16:46
SWINGBUS 1520 FOR FC-2009-S-2020-10-31:14:14--1--1-0-0
FRI, AUG 12 2011 14:29

2020 NW FMM STUDY

Figure G-2020SP-5

Bus - VOLTAGE (kV/PU)
Branch - MW/Mvar
Equipment - MW/Mvar
100.0%RATEA
1.120OV 0.950UV
kV: <=34.500 <=69.000 <=138.000 <=240.000 <=500.000 >500.000

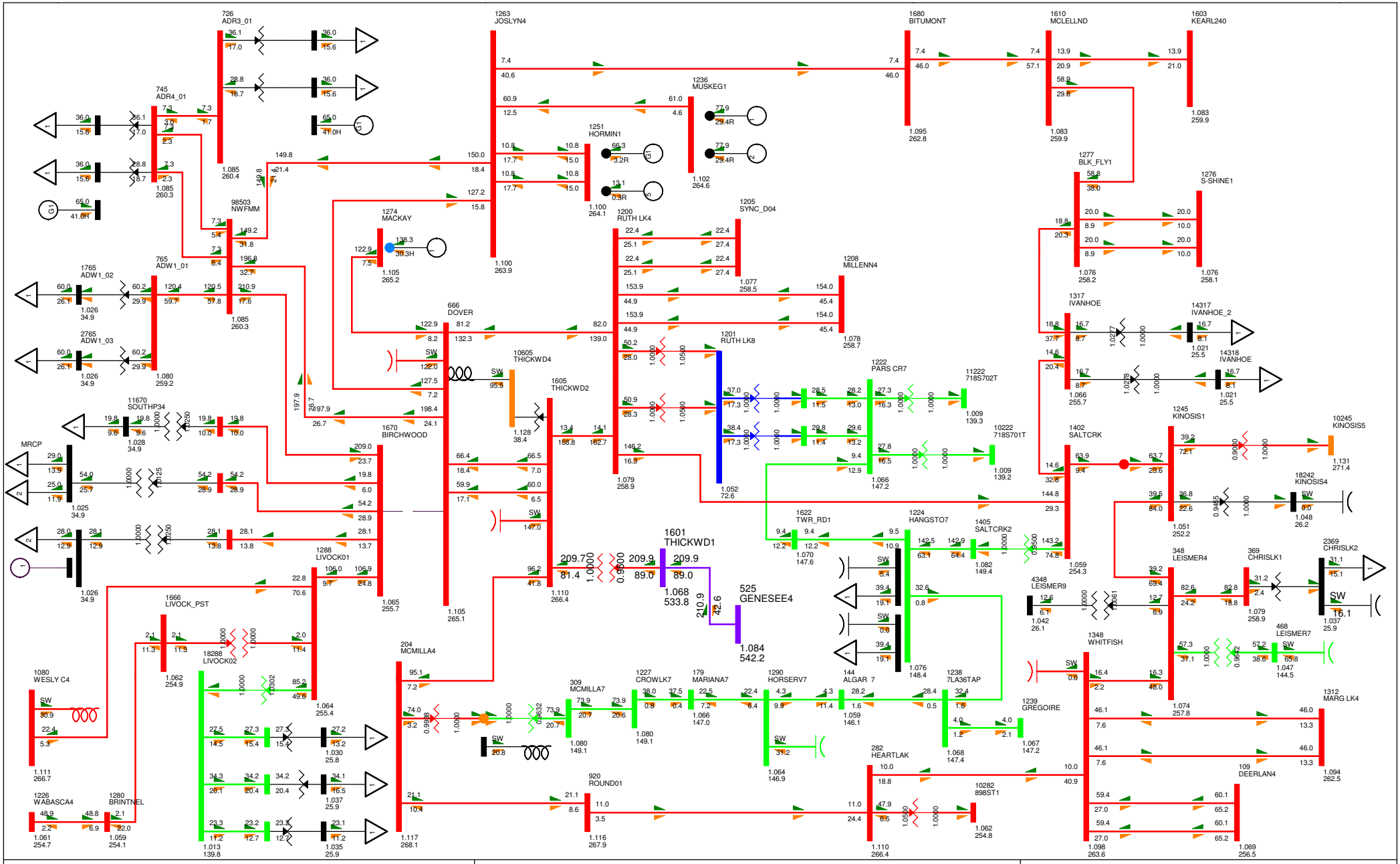

BC - Alberta (IMPORT)782.7 MW

TASMO MODEL; OUTPUT GENERATED 2010-03-01 14:16:46
SWINGBUS 1520 FOR FC-2009-S-2020-10-31:14:14--1--1-0-0
FRI, AUG 12 2011 14:29

2020 NW FMM STUDY

Figure G-2020SP-6

Bus - VOLTAGE (kV/PU)
Branch - MW/Mvar
Equipment - MW/Mvar

100.0%RATEA
1.120OV 0.950UV
kV: <=34.500 <=69.000 <=138.000 <=240.000 <=500.000 >500.000

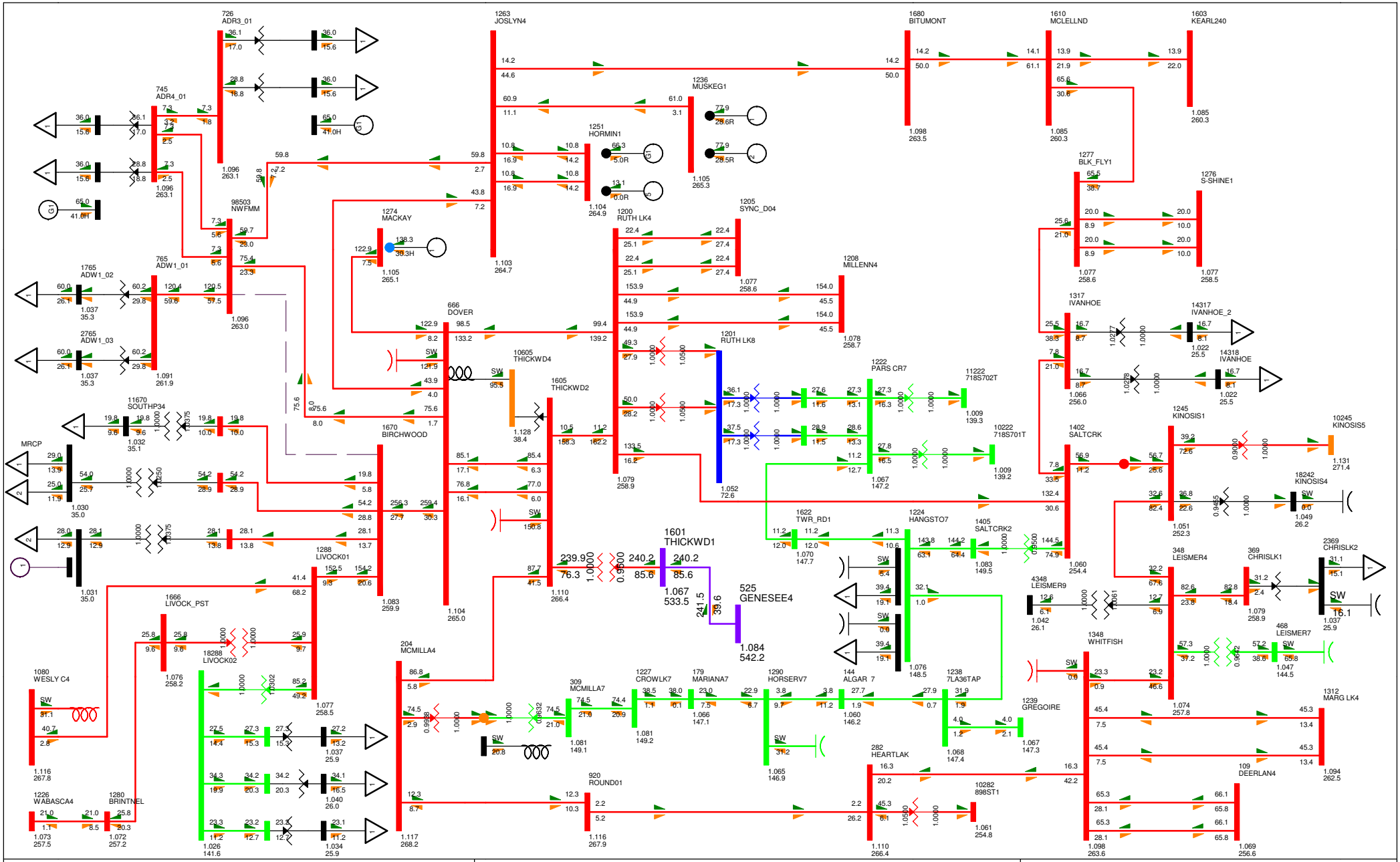

BC - Alberta (IMPORT)778.0 MW

TASMO MODEL; OUTPUT GENERATED 2010-03-01 14:16:46
SWINGBUS 1520 FOR FC-2009-5-2020-10-31:14:14--1--1-0-0
FRI, AUG 12 2011 14:29

2020 NW FMM STUDY

Figure G-2020SP-7

Bus - VOLTAGE (kV/PU)
Branch - MW/Mvar
Equipment - MW/Mvar
100.0%RATEA
1.120OV 0.950UV
kV: <=34.500 <=69.000 <=138.000 <=240.000 <=500.000 >500.000

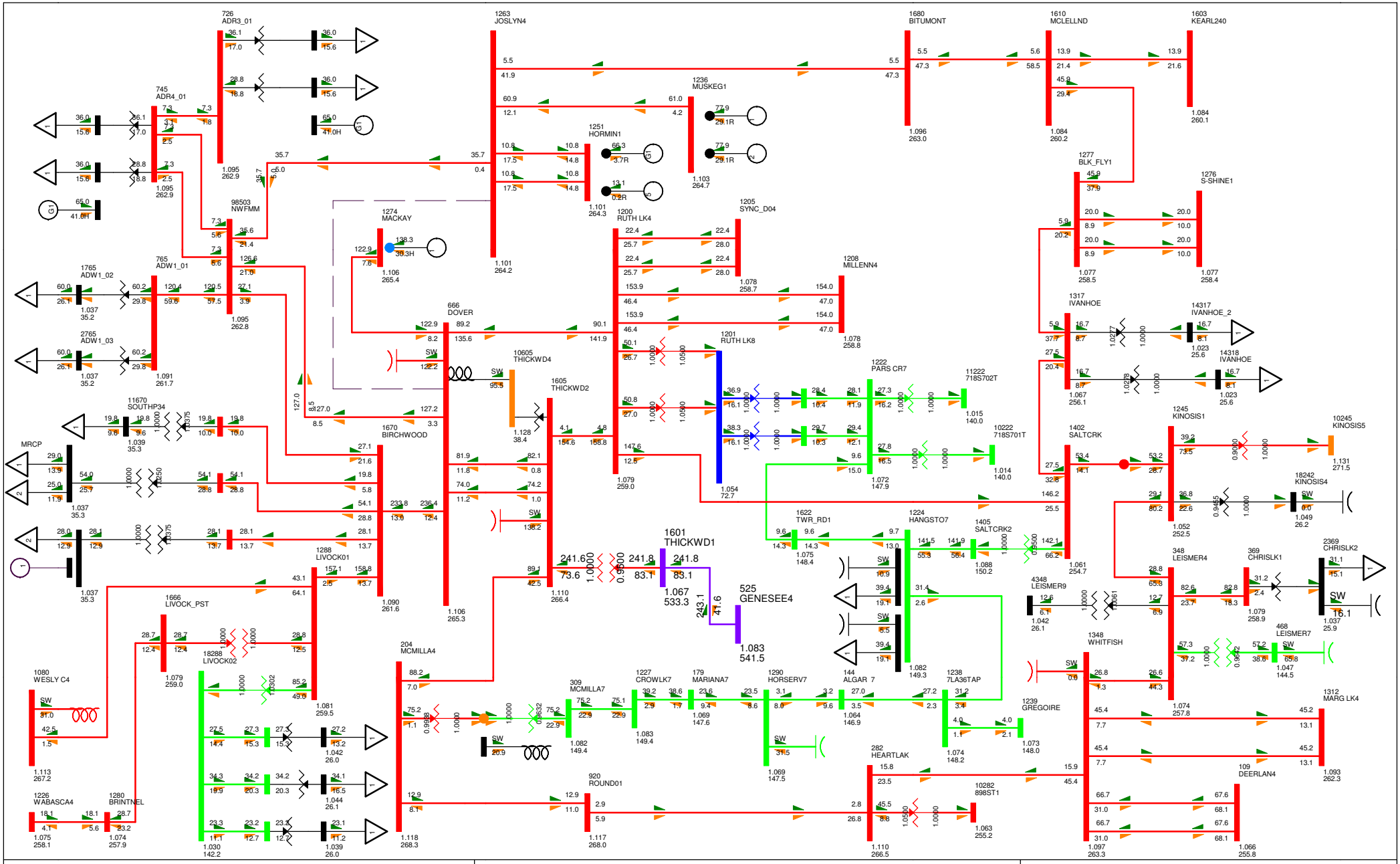

BC - Alberta (IMPORT)780.3 MW

TASMO MODEL; OUTPUT GENERATED 2010-03-01 14:16:46
SWINGBUS 1520 FOR FC-2009-S-2020-10-31:14:14--1--1-0-0
FRI, AUG 12 2011 14:29

2020 NW FMM STUDY

Figure G-2020SP-8

Bus - VOLTAGE (kV/PU)
Branch - MW/Mvar
Equipment - MW/Mvar
100.0%RATEA
1.120OV 0.950UV
kV: <=34.500 <=69.000 <=138.000 <=240.000 <=500.000 >500.000

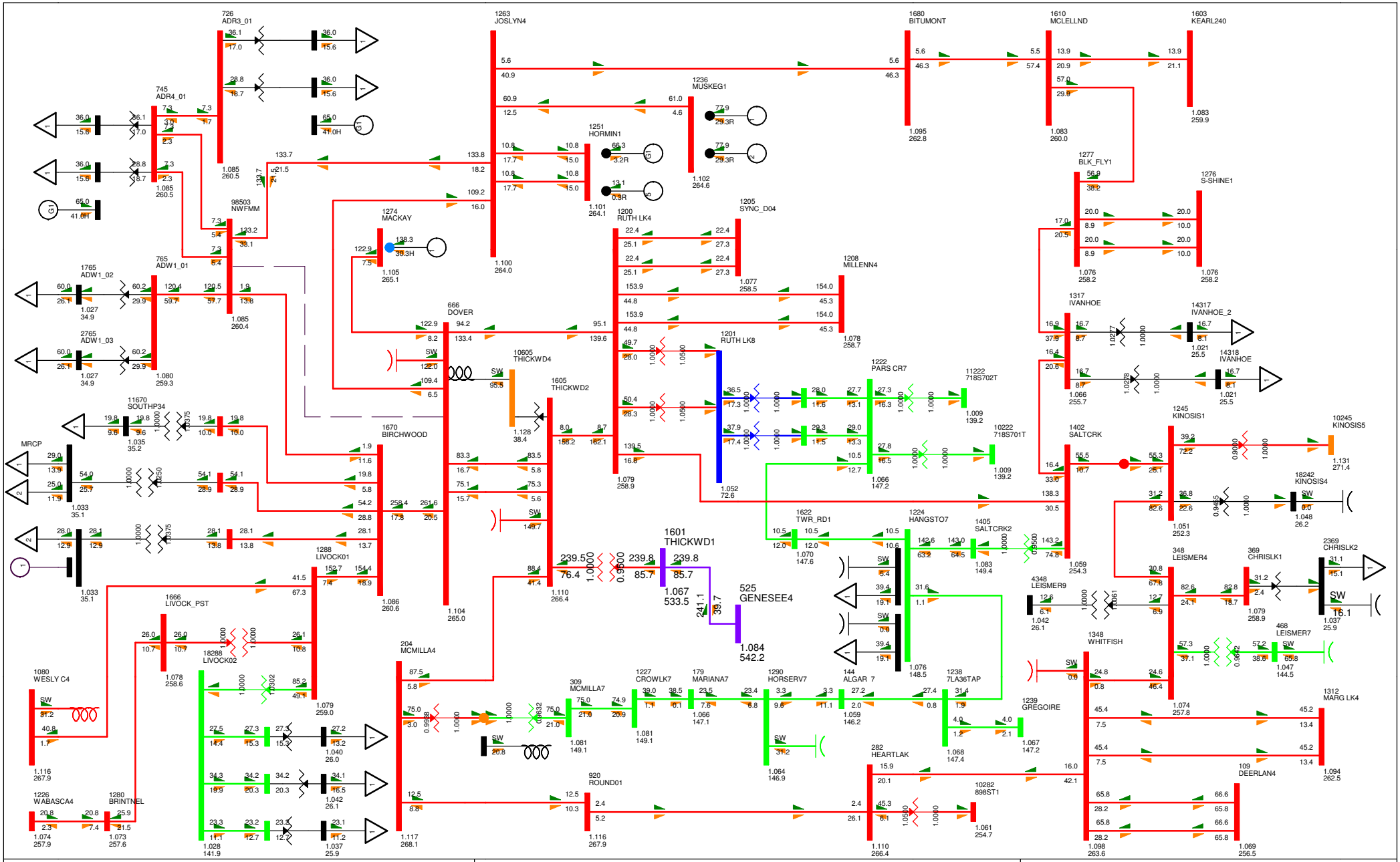

BC - Alberta (IMPORT)778.6 MW

TASMO MODEL; OUTPUT GENERATED 2010-03-01 14:16:46
SWINGBUS 1520 FOR FC-2009-5-2020-10-31:14:14--1--1-0-0
FRI, AUG 12 2011 14:29

2020 NW FMM STUDY

Figure G-2020SP-9

Bus - VOLTAGE (kV/PU)
Branch - MW/Mvar
Equipment - MW/Mvar
100.0%RATEA
1.120OV 0.950UV
kV: <=34.500 <=69.000 <=138.000 <=240.000 <=500.000 >500.000

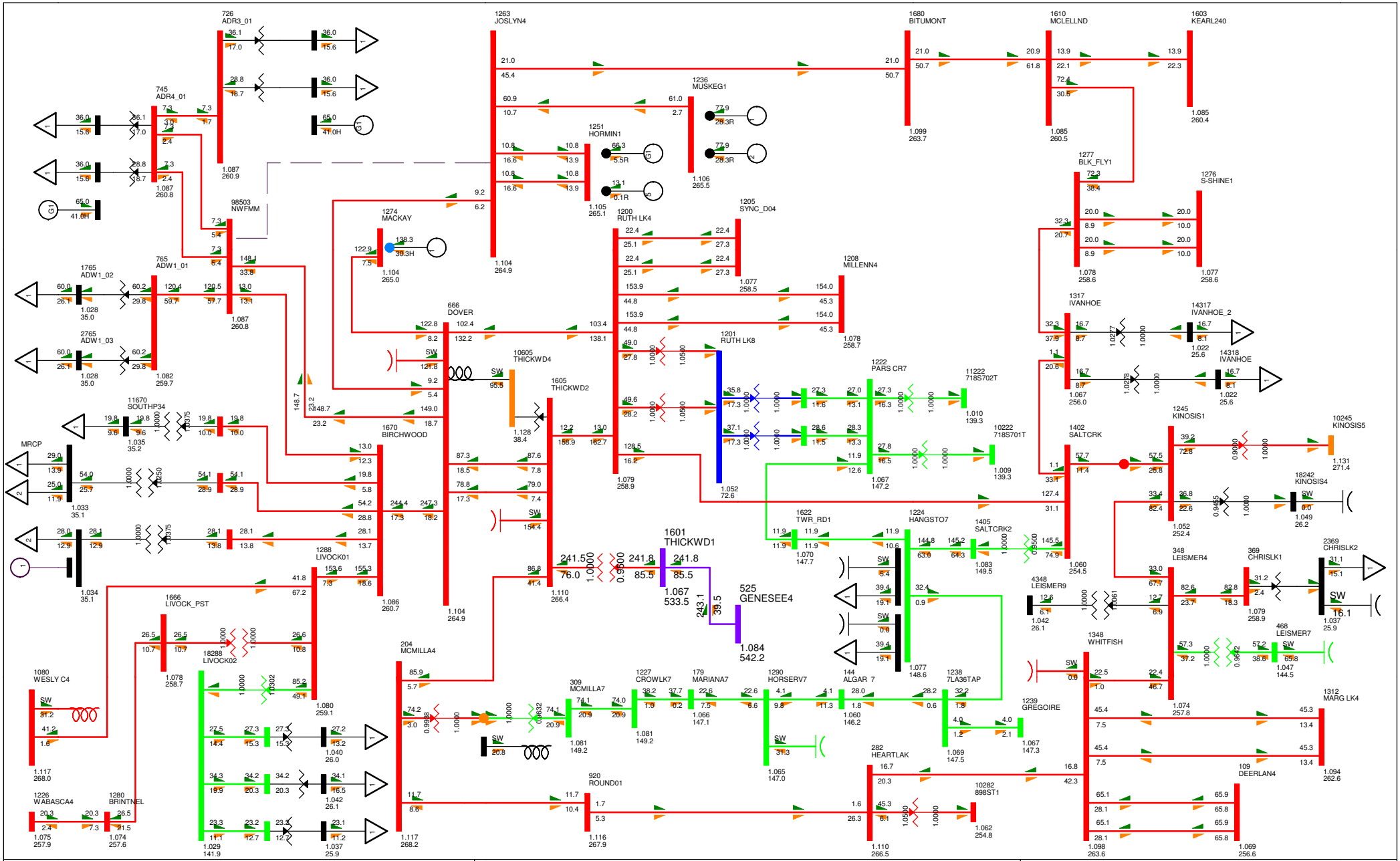

BC - Alberta (IMPORT)778.1 MW

TASMO MODEL; OUTPUT GENERATED 2010-03-01 14:16:46
SWINGBUS 1520 FOR FC-2009-5-2020-10-31:14:14--1--1-0-0
FRI, AUG 12 2011 14:29

2020 NW FMM STUDY

Figure G-2020SP-10

Bus - VOLTAGE (kV/PU)
Branch - MW/Mvar
Equipment - MW/Mvar
100.0%RATEA
1.120OV 0.950UV
kV: <=34.500 <=69.000 <=138.000 <=240.000 <=500.000 >500.000

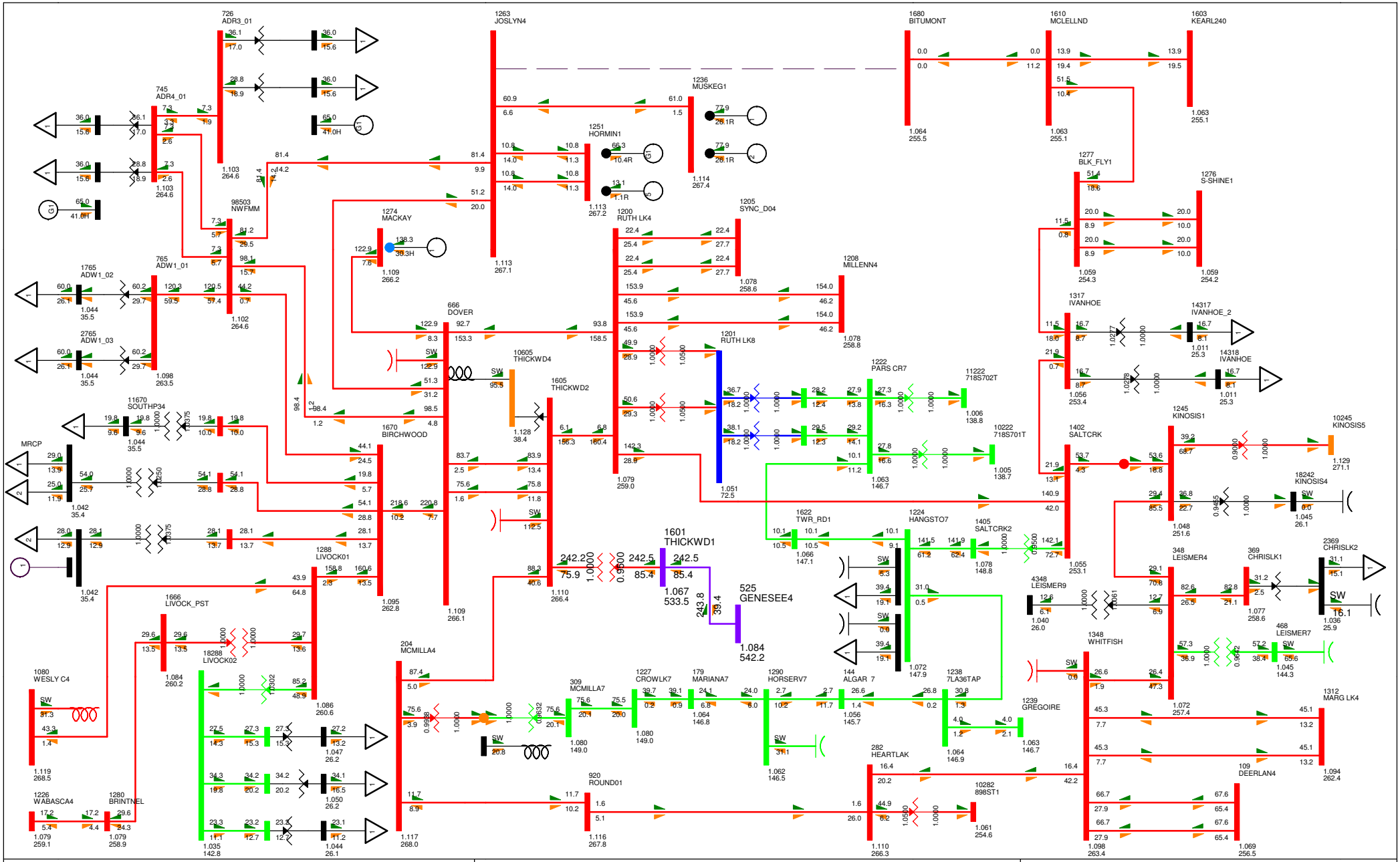
726
ADR3_01
745
ADR4_01
1263
JOSLYN4
1680
BITUMONT
1610
MCLELLND
1603
KEARL240
1236
MUSKEG1
1251
HORMIN1
1277
BLK_FLY1
1276
S-SHINE1
1274
MACKAY
98503
NWFMM
1200
RUTH LK4
1205
SYNC_D04
1208
MILLENN4
1765
ADW1_02
765
ADW1_01
2765
ADW1_03
666
DOVER
1201
RUTH LK8
1222
PARS CR7
11222
718S702T
10222
718S701T
1317
IVANHOE
14317
IVANHOE_2
14318
IVANHOE
10605
THICKWD4
1605
THICKWD2
1670
BIRCHWOOD
11670
SOUTHP34
MRCP
1402
SALTCRK
1245
KINOSIS1
10245
KINOSIS5
18242
KINOSIS4
1622
TWR_RD1
1224
HANGSTO7
1405
SALTCRK2
1601
THICKWD1
525
GENESEE4
348
LEISMER4
369
CHRISLK1
2369
CHRISLK2
4348
LEISMER9
468
LEISMER7
1348
WHITFISH
1239
GREGOIRE
1312
MARG LK4
109
DEERLAN4
1666
LIVOCK_PST
1288
LIVOCK01
18288
LIVOCK02
1080
WESLY C4
1226
WABASCA4
1280
BRINTNEL
204
MCMILLA4
309
MCMILLA7
1227
CROWLK7
179
MARIANA7
1290
HORSERV7
144
ALGAR 7
1238
7LA36TAP
282
HEARTLAK
920
ROUND01
10282
898ST1
1084
260.2
1119
268.5
1079
259.1
1079
258.9
1035
142.8
1086
260.6
1047
26.2
1050
26.2
1044
26.1
1117
268.0
1116
267.8
1080
149.0
1064
146.8
1080
149.0
1062
146.5
1064
146.9
1056
145.7
1110
266.3
1061
254.6
1063
146.7
1098
263.4
1069
256.5
1072
257.4
1094
262.4
1036
25.9
1045
144.3
1077
258.6
1040
26.0
1048
251.6
1045
26.1
1129
271.1
1055
253.1
1078
148.8
1066
147.1
1072
147.9
1051
72.5
1079
259.0
1078
258.8
1078
258.6
1063
146.7
1006
138.8
1005
138.7
1110
266.4
1109
266.1
1113
267.1
1114
267.4
1113
267.2
1109
266.2
1103
264.6
1102
264.6
1098
263.5
1044
35.5
1042
35.4
1095
262.8
1128
38.4
1063
255.5
1064
255.5
1063
255.1
1063
255.1
1059
254.3
1059
254.2
1056
253.4
1011
25.3
1011
25.3
1044
35.5
1044
35.5
1042
35.4
1040
26.0
1077
258.6
1036
25.9
1045
144.3
1045
26.1
1048
251.6
1072
257.4
1094
262.4
1069
256.5
1098
263.4
1061
254.6
1063
146.7
1064
146.9
1062
146.5
1056
145.7
1110
266.3
1080
149.0
1064
146.8
1080
149.0
1117
268.0
1116
267.8
1086
260.6
1047
26.2
1050
26.2
1044
26.1
1035
142.8
1119
268.5
1079
259.1
1079
258.9
1084
260.2
1095
262.8
1109
266.1
1110
266.4
1051
72.5
1079
259.0
1078
258.8
1078
258.6
1063
146.7
1006
138.8
1005
138.7
1066
147.1
1072
147.9
1078
148.8
1055
253.1
1063
146.7
1064
146.9
1062
146.5
1056
145.7
1110
266.3
1061
254.6

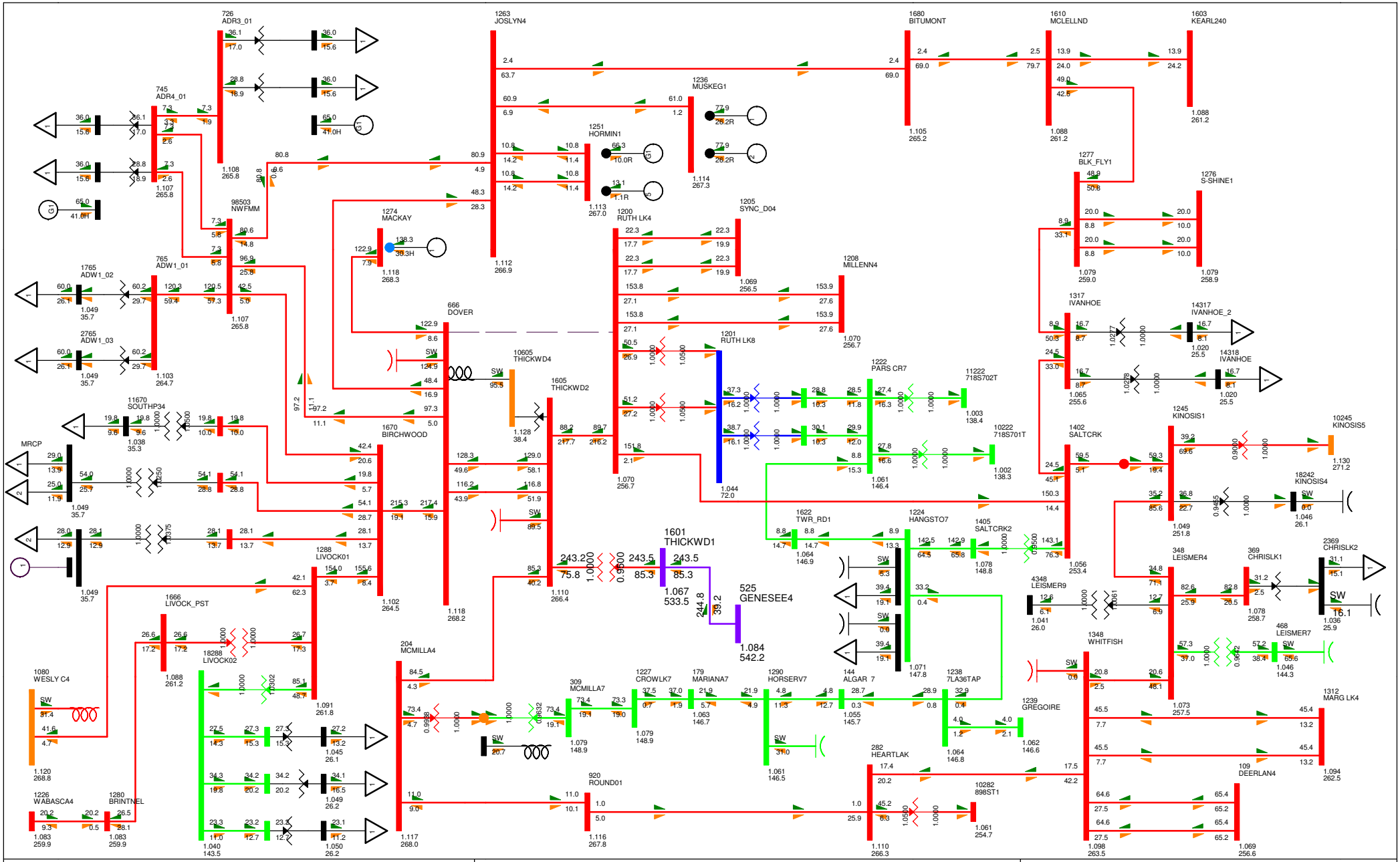

BC - Alberta (IMPORT)778.0 MW

TASMO MODEL; OUTPUT GENERATED 2010-03-01 14:16:46
SWINGBUS 1520 FOR FC-2009-S-2020-10-31:14:14--1--1-0-0
FRI, AUG 12 2011 14:30

2020 NW FMM STUDY

Figure G-2020SP-12

Bus - VOLTAGE (kV/PU)
Branch - MW/Mvar
Equipment - MW/Mvar
100.0%RATEA
1.120OV 0.950UV
kV: <=34.500 <=69.000 <=138.000 <=240.000 <=500.000 >500.000

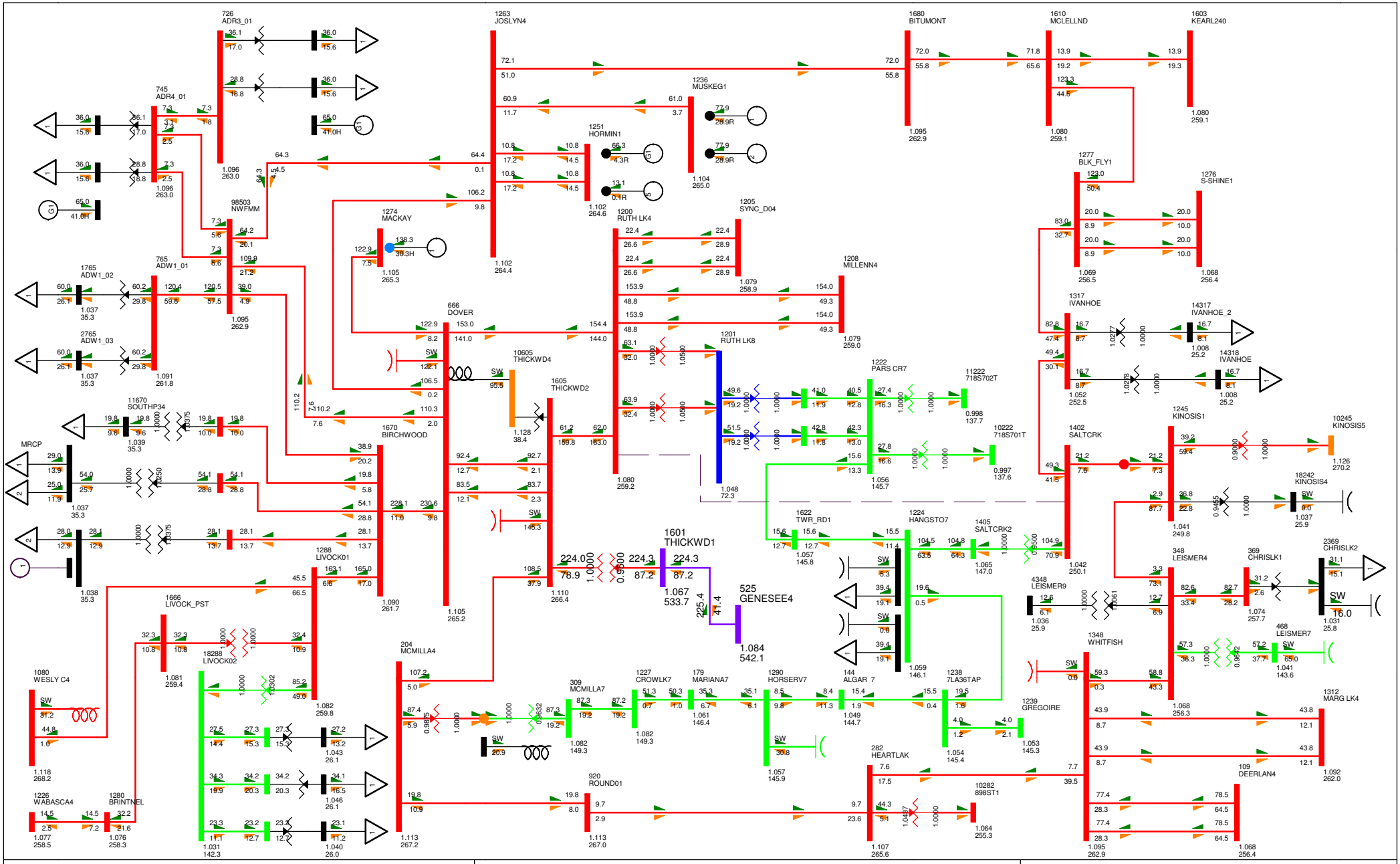

BC - Alberta (IMPORT)779.9 MW

TASMO MODEL; OUTPUT GENERATED 2010-03-01 14:16:46
SWINGBUS 1520 FOR FC-2009-S-2020-10-31:14:14--1--1-0-0
FRI, AUG 12 2011 14:30

2020 NW FMM STUDY

Figure G-2020SP-13

Bus - VOLTAGE (kV/PU)
Branch - MW/Mvar
Equipment - MW/Mvar
100.0%RATEA
1.120OV 0.950UV
kV: <=34.500 <=69.000 <=138.000 <=240.000 <=500.000 >500.000

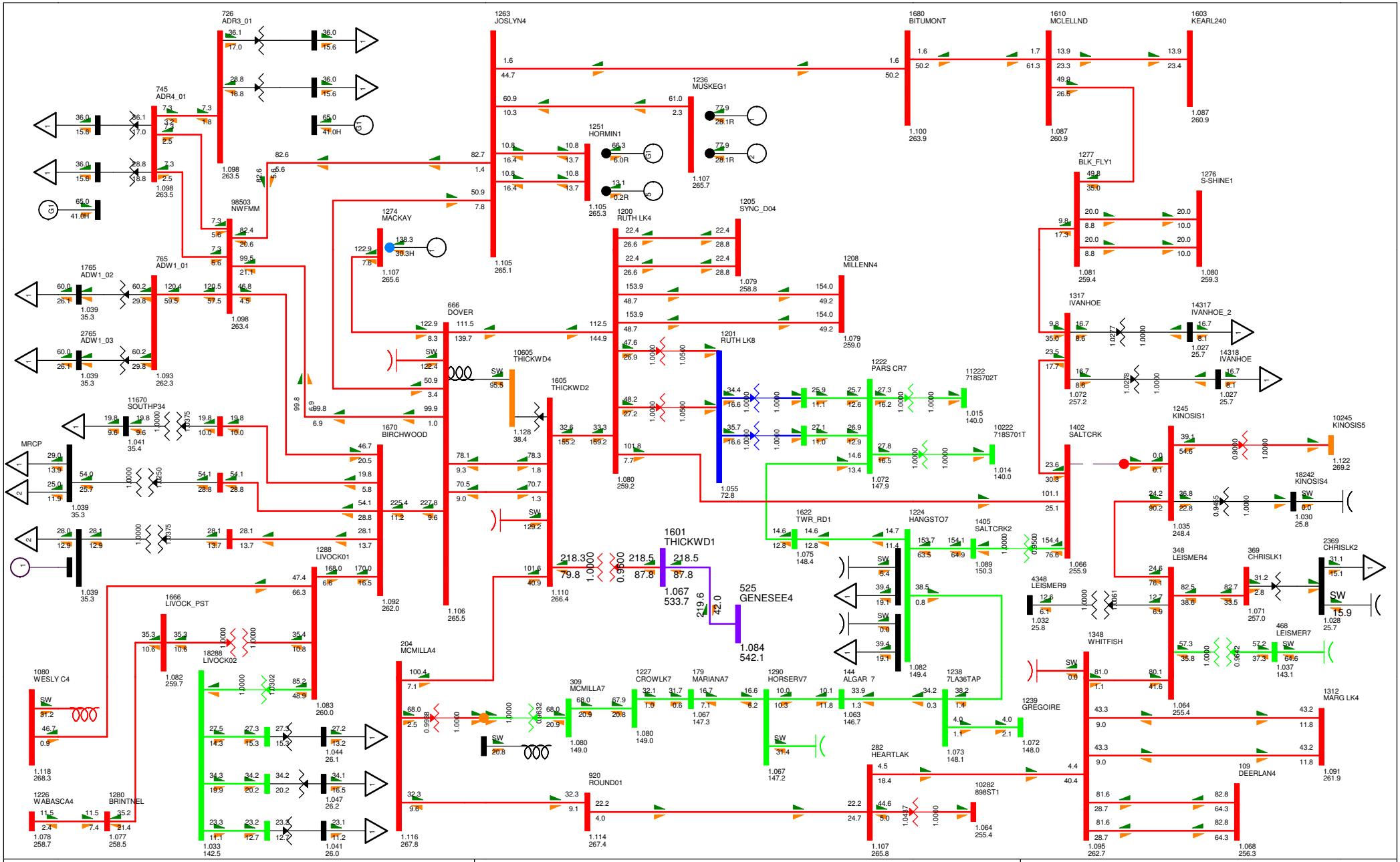
726 ADR3_01
745 ADR4_01
1263 JOSLYN4
1680 BITUMONT
1610 MCLELLND
1603 KEARL240
1236 MUSKEG1
1251 HORMIN1
1277 BLK_FLY1
1276 S-SHINE1
98503 NWFMM
1274 MACKAY
1200 RUTH LK4
1205 SYNC_D04
1208 MILLENN4
1765 ADW1_02
765 ADW1_01
2765 ADW1_03
1317 IVANHOE
14317 IVANHOE_2
14318 IVANHOE
666 DOVER
10605 THICKWD4
1605 THICKWD2
1201 RUTH LK8
1222 PARS CR7
11222 718S702T
10222 718S701T
11670 SOUTHP34
1670 BIRCHWOOD
MRCP
1402 SALTCRK
1245 KINOSIS1
10245 KINOSIS5
18242 KINOSIS4
1622 TWR_RD1
1224 HANGSTO7
1405 SALTCRK2
348 LEISMER4
369 CHRISLK1
2369 CHRISLK2
4348 LEISMER9
468 LEISMER7
1348 WHITFISH
1239 GREGOIRE
1312 MARG LK4
109 DEERLAN4
1601 THICKWD1
525 GENESEE4
1084
542.1
1666 LIVOCK_PST
1288 LIVOCK01
18288 LIVOCK02
1080 WESLY C4
1226 WABASCA4
1280 BRINTNEL
204 MCMILLA4
309 MCMILLA7
1227 CROWLK7
179 MARIANA7
1290 HORSERV7
144 ALGAR 7
1238 7LA36TAP
282 HEARTLAK
920 ROUND01
10282 898ST1
BC - Alberta (IMPORT)778.4 MW
TASMO MODEL; OUTPUT GENERATED 2010-03-01 14:16:46
SWINGBUS 1520 FOR FC-2009-S-2020-10-31:14:14--1--1-0-0
FRI, AUG 12 2011 14:30
2020 NW FMM STUDY
Figure G-2020SP-14
Bus - VOLTAGE (kV/PU)
Branch - MW/Mvar
Equipment - MW/Mvar
100.0%RATEA
1.120OV 0.950UV
kV: <=34.500 <=69.000 <=138.000 <=240.000 <=500.000 >500.000

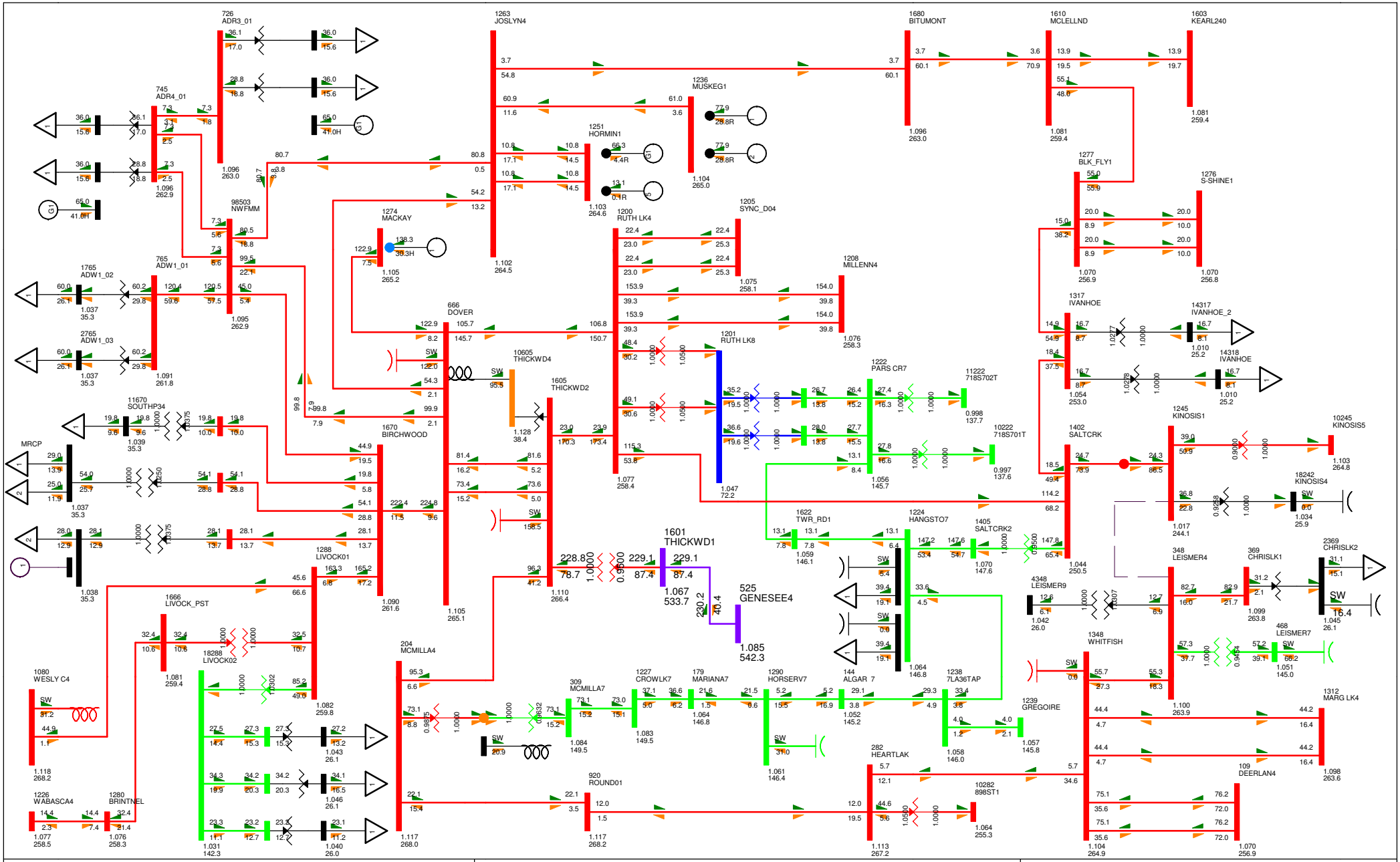
726
ADR3_01
1263
JOSLYN4
1680
BITUMONT
1610
MCLELLND
1603
KEARL240
745
ADR4_01
1236
MUSKEG1
1251
HORMIN1
1277
BLK_FLY1
1276
S-SHINE1
98503
NWFMM
1274
MACKAY
1200
RUTH LK4
1205
SYNC_D04
1208
MILLENN4
1765
ADW1_02
765
ADW1_01
2765
ADW1_03
666
DOVER
1201
RUTH LK8
1222
PARS CR7
11222
718S702T
1317
IVANHOE
14317
IVANHOE_2
14318
IVANHOE
10605
THICKWD4
1605
THICKWD2
10222
718S701T
11670
SOUTHP34
1670
BIRCHWOOD
1402
SALTCRK
1245
KINOSIS1
10245
KINOSIS5
18242
KINOSIS4
MRCP
1622
TWR_RD1
1224
HANGSTO7
1405
SALTCRK2
1601
THICKWD1
525
GENESEE4
348
LEISMER4
369
CHRISLK1
2369
CHRISLK2
4348
LEISMER9
468
LEISMER7
1288
LIVOCK01
1666
LIVOCK_PST
18288
LIVOCK02
204
MCMILLA4
309
MCMILLA7
1227
CROWLK7
179
MARIANA7
1290
HORSERV7
144
ALGAR 7
1238
7LA36TAP
1239
GREGOIRE
1348
WHITFISH
1312
MARG LK4
109
DEERLAN4
282
HEARTLAK
920
ROUND01
10282
898ST1
1080
WESLY C4
1226
WABASCA4
1280
BRINTNEL
1084
149.5
1061
146.4
1064
146.8
1083
149.5
1052
145.2
1057
145.8
1058
146.0
1064
255.3
1113
267.2
1117
268.2
1117
268.0
1031
142.3
1040
26.0
1046
26.1
1043
26.1
1082
259.8
1090
261.6
1110
266.4
1105
265.1
1102
264.5
1103
264.6
1104
265.0
1096
263.0
1095
262.9
1091
261.8
1077
258.4
1076
258.3
1075
258.1
1047
72.2
1056
145.7
1059
146.1
1070
147.6
1044
250.5
1042
26.0
1099
263.8
1045
26.1
1051
145.0
1100
263.9
1104
264.9
1070
256.9
1081
259.4
1017
244.1
1034
25.9
1103
264.8
1010
25.2
1054
253.0
1027
1000
1070
256.8
1081
259.4
1096
263.0
1096
262.9
1037
35.3
1039
35.3
1038
35.3
1118
268.2
1076
258.3
1077
258.5

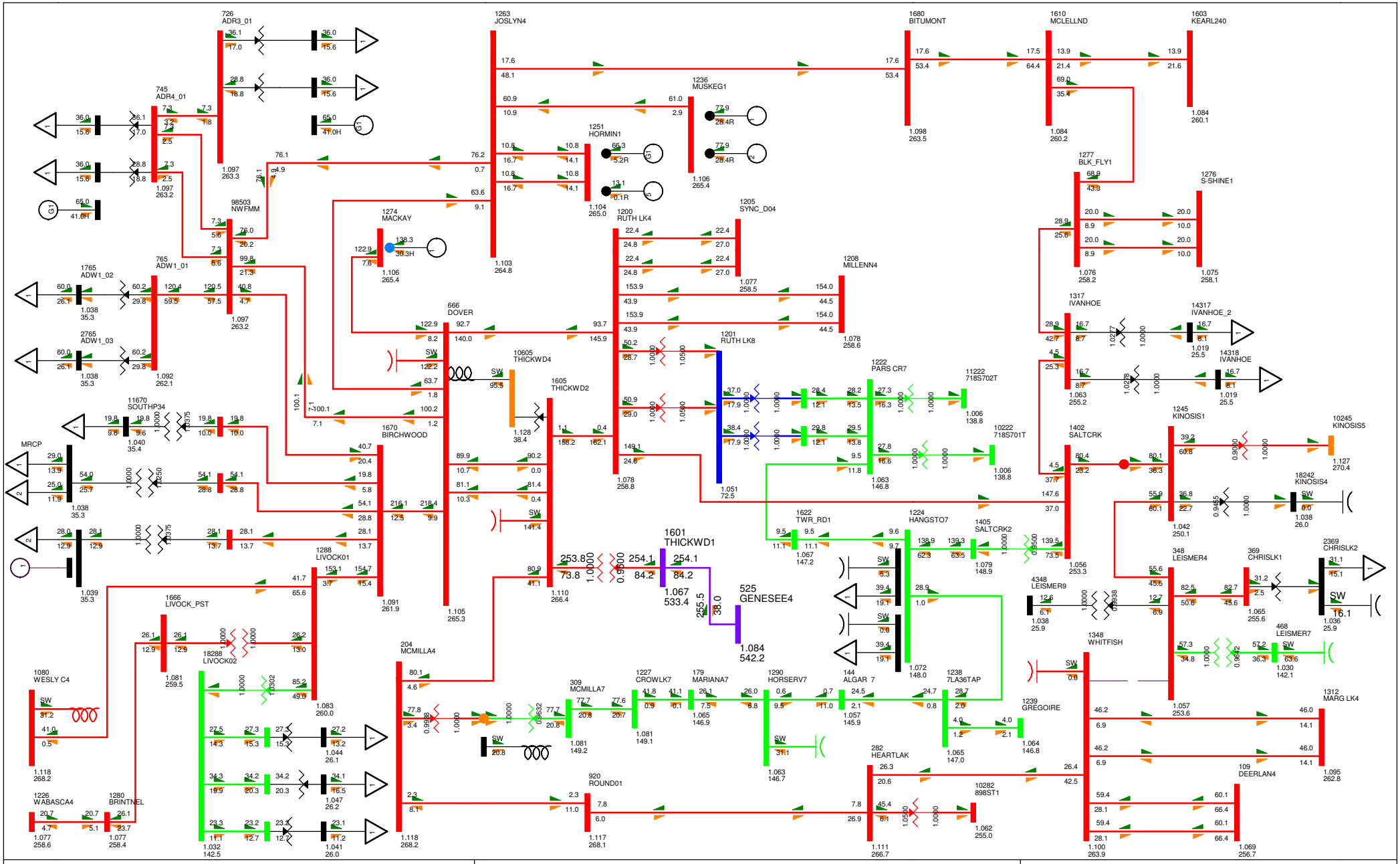

BC - Alberta (IMPORT)777.4 MW

TASMO MODEL; OUTPUT GENERATED 2010-03-01 14:16:46
SWINGBUS 1520 FOR FC-2009-S-2020-10-31:14:14--1--1-0-0
FRI, AUG 12 2011 14:30

2020 NW FMM STUDY

Figure G-2020SP-16

Bus - VOLTAGE (kV/PU)
Branch - MW/Mvar
Equipment - MW/Mvar
100.0%RATEA
1.120OV 0.950UV
kV: <=34.500 <=69.000 <=138.000 <=240.000 <=500.000 >500.000

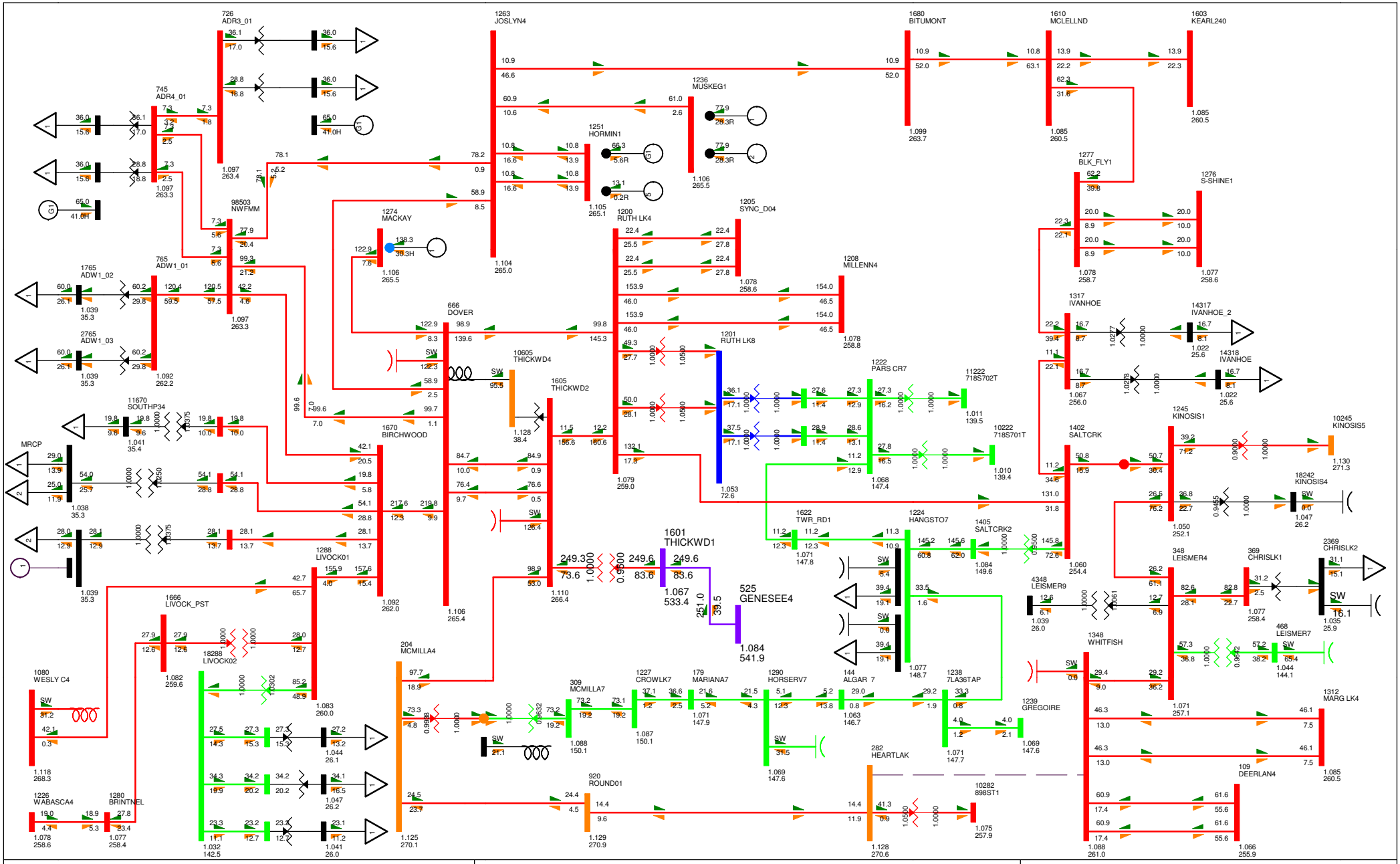

BC - Alberta (IMPORT)777.0 MW

TASMO MODEL; OUTPUT GENERATED 2010-03-01 14:16:46
SWINGBUS 1520 FOR FC-2009-5-2020-10-31:14:14--1--1-0-0
FRI, AUG 12 2011 14:30

2020 NW FMM STUDY

Figure G-2020SP-17

Bus - VOLTAGE (kV/PU)
Branch - MW/Mvar
Equipment - MW/Mvar
100.0%RATEA
1.120OV 0.950UV
kV: <=34.500 <=69.000 <=138.000 <=240.000 <=500.000 >500.000

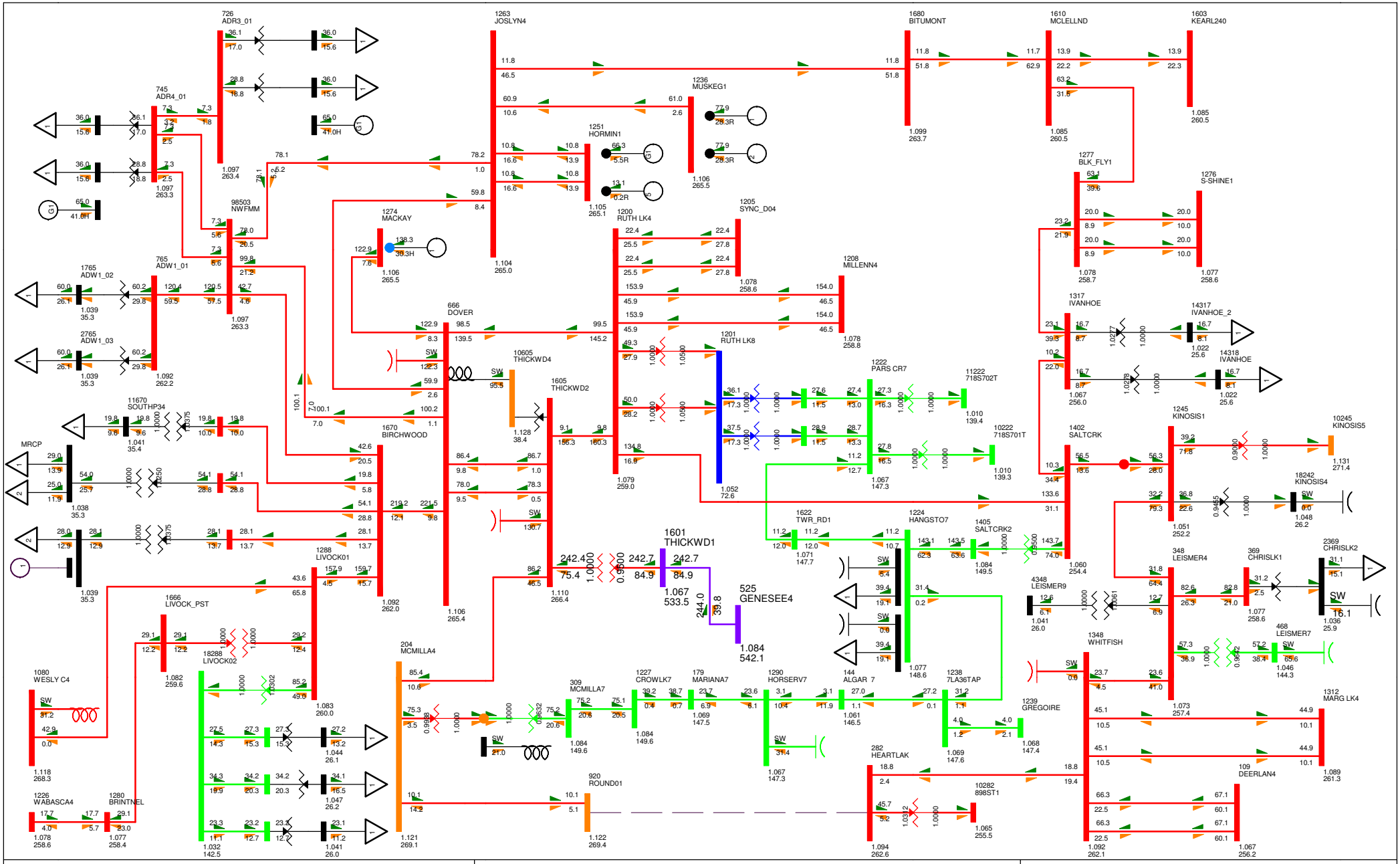
726
ADR3_01
745
ADR4_01
1263
JOSLYN4
1680
BITUMONT
1610
MCLELLND
1603
KEARL240
1236
MUSKEG1
1251
HORMIN1
1277
BLK_FLY1
1276
S-SHINE1
98503
NWFMM
1274
MACKAY
1200
RUTH LK4
1205
SYNC_D04
1208
MILLENN4
1765
ADW1_02
765
ADW1_01
2765
ADW1_03
666
DOVER
1201
RUTH LK8
1317
IVANHOE
14317
IVANHOE_2
14318
IVANHOE
10605
THICKWD4
1605
THICKWD2
1222
PARS CR7
11222
718S702T
10222
718S701T
11670
SOUTHP34
1670
BIRCHWOOD
MRCP
1402
SALTCRK
1245
KINOSIS1
10245
KINOSIS5
18242
KINOSIS4
1622
TWR_RD1
1224
HANGSTO7
1405
SALTCRK2
1601
THICKWD1
525
GENESEE4
348
LEISMER4
369
CHRISLK1
2369
CHRISLK2
4348
LEISMER9
468
LEISMER7
1348
WHITFISH
1239
GREGOIRE
1312
MARG LK4
109
DEERLAN4
1288
LIVOCK01
1666
LIVOCK_PST
18288
LIVOCK02
1080
WESLY C4
1226
WABASCA4
1280
BRINTNEL
204
MCMILLA4
309
MCMILLA7
1227
CROWLK7
179
MARIANA7
1290
HORSERV7
144
ALGAR 7
1238
7LA36TAP
282
HEARTLAK
10282
898ST1
920
ROUND01
BC - Alberta (IMPORT)776.9 MW
TASMO MODEL; OUTPUT GENERATED 2010-03-01 14:16:46
SWINGBUS 1520 FOR FC-2009-5-2020-10-31:14:14--1--1-0-0
FRI, AUG 12 2011 14:30
2020 NW FMM STUDY
Figure G-2020SP-18
Bus - VOLTAGE (kV/PU)
Branch - MW/Mvar
Equipment - MW/Mvar
100.0%RATEA
1.120OV 0.950UV
kV: <=34.500 <=69.000 <=138.000 <=240.000 <=500.000 >500.000

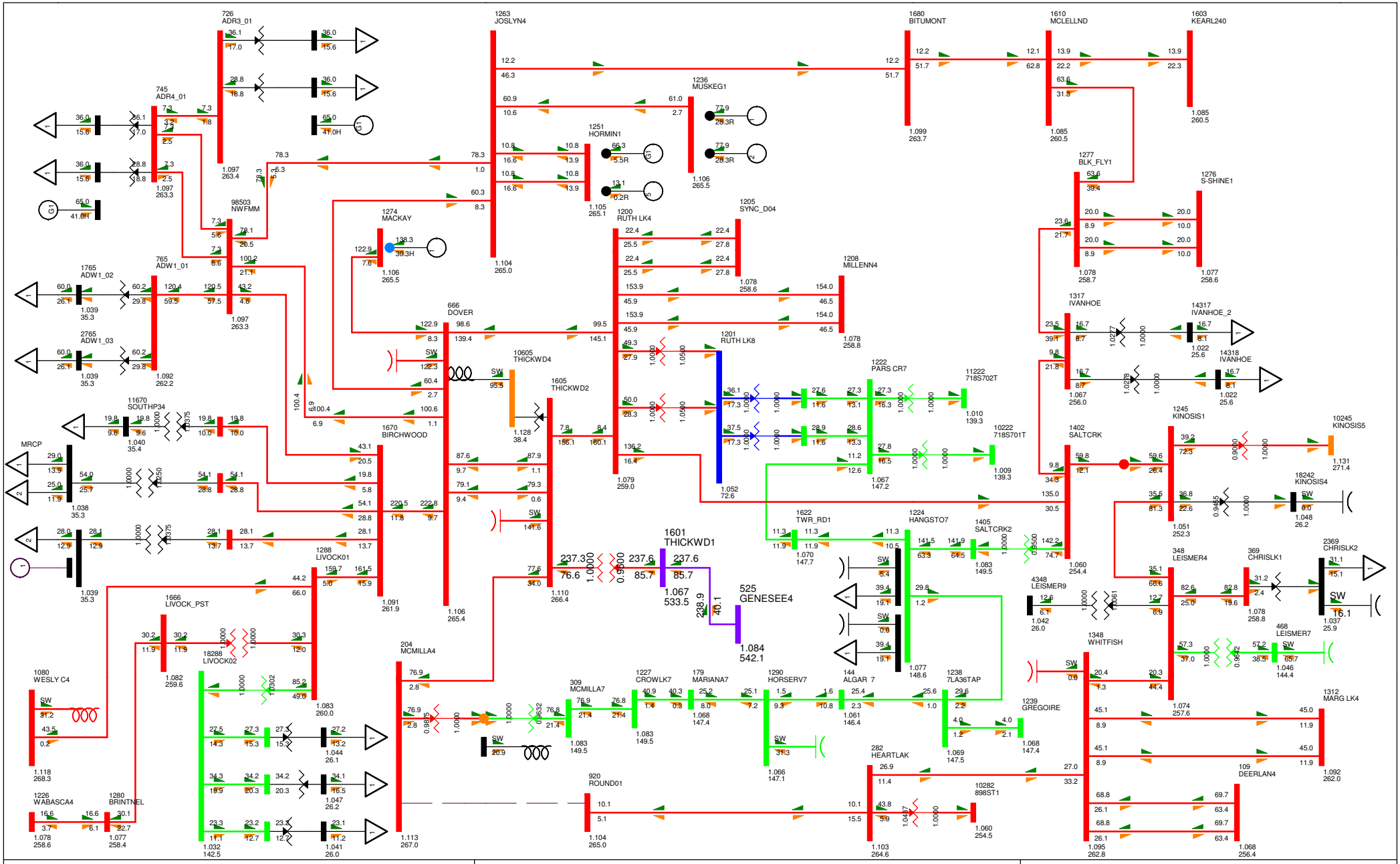

BC - Alberta (IMPORT)777.1 MW

TASMO MODEL; OUTPUT GENERATED 2010-03-01 14:16:46
SWINGBUS 1520 FOR FC-2009-S-2020-10-31:14:14--1--1-0-0
FRI, AUG 12 2011 14:30

2020 NW FMM STUDY

Figure G-2020SP-19

Bus - VOLTAGE (kV/PU)
Branch - MW/Mvar
Equipment - MW/Mvar
100.0%RATEA
1.120OV 0.950UV
kV: <=34.500 <=69.000 <=138.000 <=240.000 <=500.000 >500.000

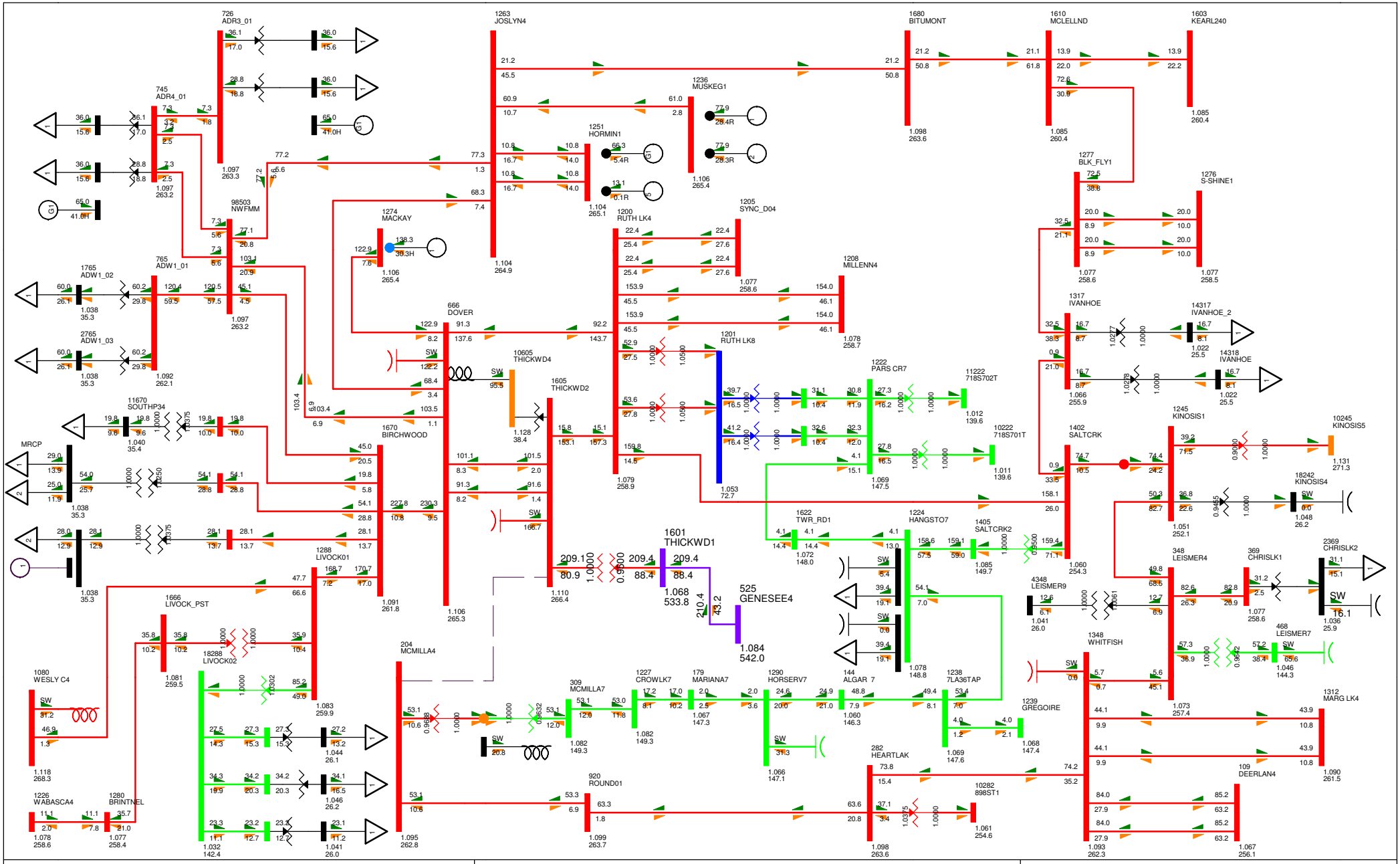

BC - Alberta (IMPORT)780.0 MW

TASMO MODEL; OUTPUT GENERATED 2010-03-01 14:16:46
SWINGBUS 1520 FOR FC-2009-S-2020-10-31:14:14--1--1-0-0
FRI, AUG 12 2011 14:30

2020 NW FMM STUDY

Figure G-2020SP-20

Bus - VOLTAGE (kV/PU)
Branch - MW/Mvar
Equipment - MW/Mvar

100.0%RATEA
1.120OV 0.950UV
kV: <=34.500 <=69.000 <=138.000 <=240.000 <=500.000 >500.000

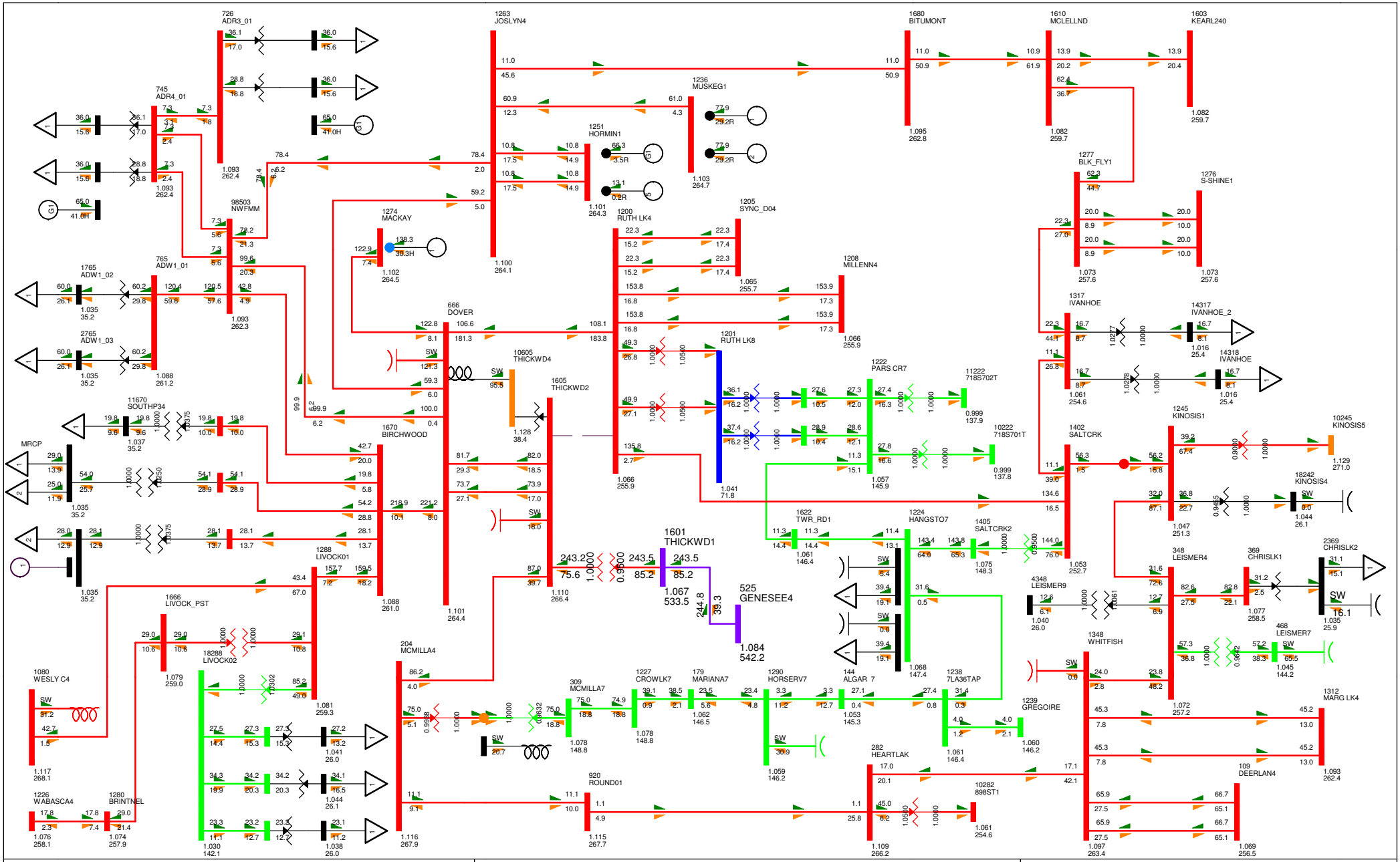

BC - Alberta (IMPORT)777.4 MW

TASMO MODEL; OUTPUT GENERATED 2010-03-01 14:16:46
SWINGBUS 1520 FOR FC-2009-S-2020-10-31:14:14--1--1-0-0
FRI, AUG 12 2011 14:30

2020 NW FMM STUDY

Figure G-2020SP-21

Bus - VOLTAGE (kV/PU)
Branch - MW/Mvar
Equipment - MW/Mvar
100.0%RATEA
1.120OV 0.950UV
kV: <=34.500 <=69.000 <=138.000 <=240.000 <=500.000 >500.000

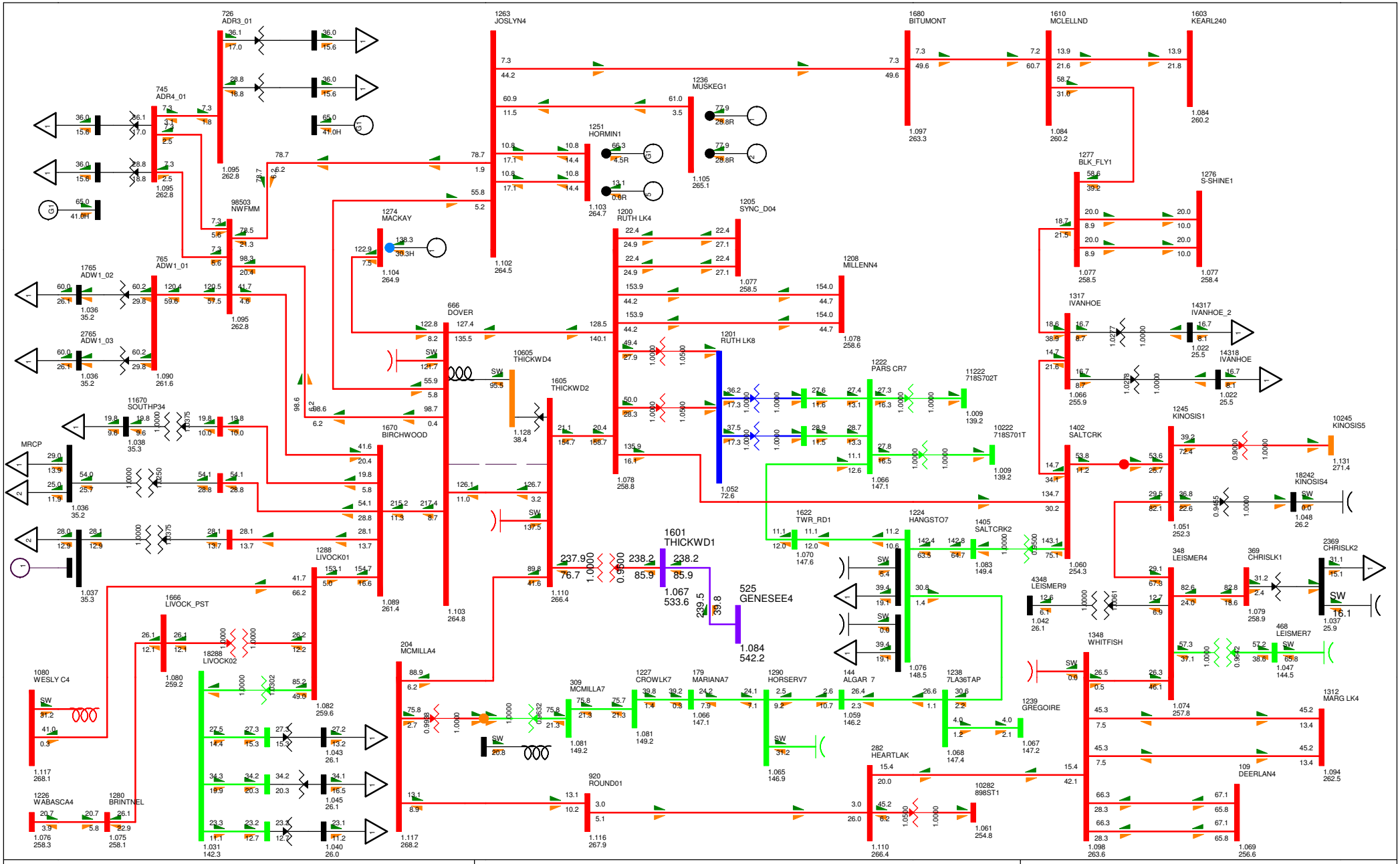
726 ADR3_01
745 ADR4_01
98503 NWFMM
765 ADW1_01
1765 ADW1_02
2765 ADW1_03
11670 SOUTHP34
MRCP
1263 JOSLYN4
1680 BITUMONT
1610 MCLELLND
1603 KEARL240
1236 MUSKEG1
1251 HORMIN1
1277 BLK_FLY1
1276 S-SHINE1
1274 MACKAY
1200 RUTH LK4
1205 SYNC_D04
1208 MILLENN4
1317 IVANHOE
14317 IVANHOE_2
14318 IVANHOE
666 DOVER
1201 RUTH LK8
1222 PARS CR7
11222 718S702T
10222 718S701T
10605 THICKWD4
1605 THICKWD2
1670 BIRCHWOOD
1402 SALTCRK
1245 KINOSIS1
10245 KINOSIS5
18242 KINOSIS4
1622 TWR_RD1
1224 HANGSTO7
1405 SALTCRK2
4348 LEISMER9
348 LEISMER4
369 CHRISLK1
2369 CHRISLK2
468 LEISMER7
1348 WHITFISH
1239 GREGOIRE
1312 MARG LK4
109 DEERLAN4
1601 THICKWD1
525 GENESEE4
1084 542.2
1288 LIVOCK01
1666 LIVOCK_PST
18288 LIVOCK02
1080 WESLY C4
1226 WABASCA4
1280 BRINTNEL
204 MCMILLA4
309 MCMILLA7
1227 CROWLK7
179 MARIANA7
1290 HORSERV7
144 ALGAR 7
1238 7LA36TAP
282 HEARTLAK
920 ROUND01
10282 898ST1
BC - Alberta (IMPORT)777.6 MW
TASMO MODEL; OUTPUT GENERATED 2010-03-01 14:16:46
SWINGBUS 1520 FOR FC-2009-5-2020-10-31:14:14--1--1-0-0
FRI, AUG 12 2011 14:30
2020 NW FMM STUDY
Figure G-2020SP-22
Bus - VOLTAGE (kV/PU)
Branch - MW/Mvar
Equipment - MW/Mvar
100.0%RATEA
1.120OV 0.950UV
kV: <=34.500 <=69.000 <=138.000 <=240.000 <=500.000 >500.000

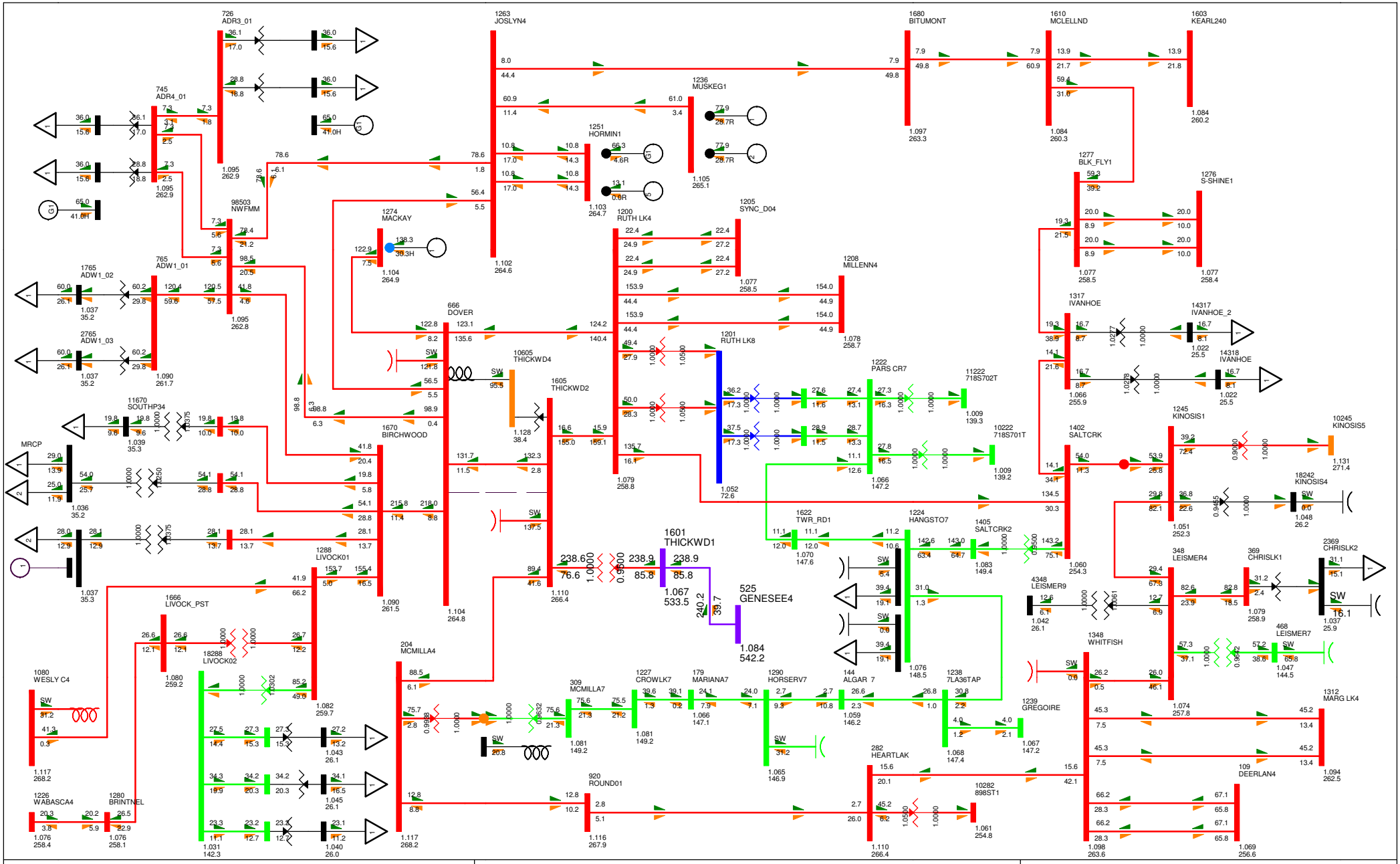

BC - Alberta (IMPORT)777.6 MW

TASMO MODEL; OUTPUT GENERATED 2010-03-01 14:16:46
SWINGBUS 1520 FOR FC-2009-S-2020-10-31:14:14--1--1-0-0
FRI, AUG 12 2011 14:30

2020 NW FMM STUDY

Figure G-2020SP-23

Bus - VOLTAGE (kV/PU)
Branch - MW/Mvar
Equipment - MW/Mvar
100.0%RATEA
1.120OV 0.950UV
kV: <=34.500 <=69.000 <=138.000 <=240.000 <=500.000 >500.000

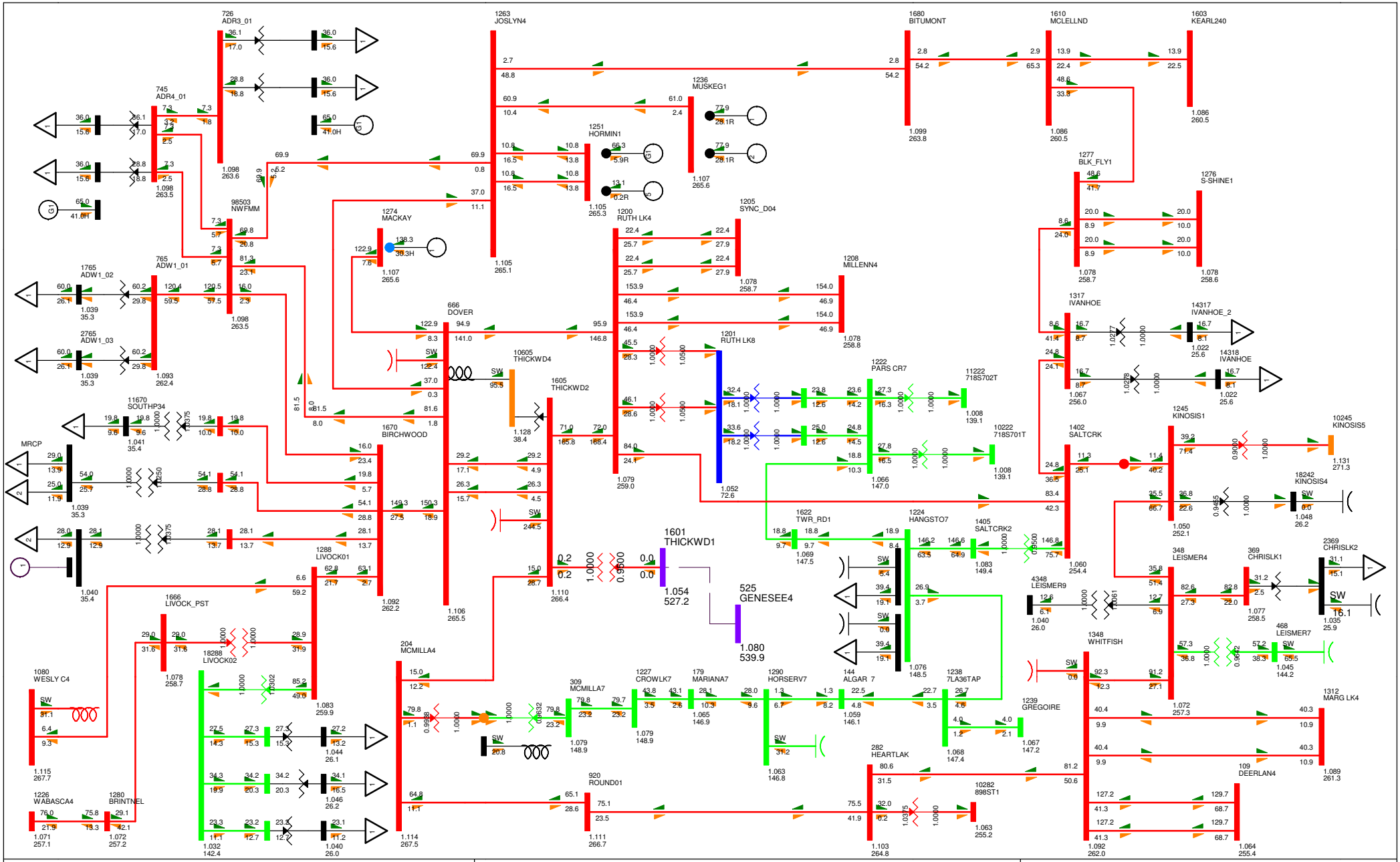

BC - Alberta (IMPORT)792.8 MW

TASMO MODEL; OUTPUT GENERATED 2010-03-01 14:16:46
SWINGBUS 1520 FOR FC-2009-S-2020-10-31:14:14--1--1-0-0
FRI, AUG 12 2011 14:30

2020 NW FMM STUDY

Figure G-2020SP-24

Bus - VOLTAGE (kV/PU)
Branch - MW/Mvar
Equipment - MW/Mvar

100.0%RATEA
1.120OV 0.950UV
kV: <=34.500 <=69.000 <=138.000 <=240.000 <=500.000 >500.000

Table G-2 Power Flow Analysis Summary- 2020 Winter Peak with NW FMM

Figure Game	Contingency	Thermal Violation	Voltage Violation
Figure G-2020WP-1	Base Case (N - 0)	None	None
Figure G-2020WP-2	Open 9L56 240kV line (WABASCA 720S to Brintnell 876S)	None	None
Figure G-2020WP-3	Open 9L15 240kV line (Wesley Creek 834S to Livock 939S)	None	None
Figure G-2020WP-4	Open 9L10 240kV line (Brintnell 876S to Livock 939S)	None	None
Figure G-2020WP-5	Open 9L57 240kV line (Livock 939S to Birchwood Creek 960S)	None	None
Figure G-2020WP-6	Open 9L74 240kV line (Birchwood Creek 960S to Dover 888S)	None	None
Figure G-2020WP-7	Open 9L95 240kV line (Birchwood Creek 960S to EllsRiver)	None	None
Figure G-2020WP-8	Open 9L09 240kV line (Dover 888S to Joslyn Creek 849S)	None	None
Figure G-2020WP-9	Open 9L08 240kV line (Ells River to to Dover 888S)	None	None
Figure G-2020WP-10	Open 9L76 240kV line (Ells River to Joslyn Creek 849S)	None	None
Figure G-2020WP-11	Open 9L32 240kV line (Joslyn Creek 849S to Bitumont 941S)	None	None
Figure G-2020WP-12	Open 9L01 240kV line (Dover 888S to Ruth Lake 848S)	None	None
Figure G-2020WP-13	Open 9L18 and 9L23 240kV line (Ruth Lake 848S to Salt Creek 977S)	None	None
Figure G-2020WP-14	Open 9L990 240kV line (Salt Creek 977S to Kinosis 856S)	None	None
Figure G-2020WP-15	Open 9L990 240kV line (Kinosis 856S to Leismer 72S)	None	None
Figure G-2020WP-16	Open 9L930 240kV line (Leismer 72S to Whitefish Lake 825S)	None	None
Figure G-2020WP-17	Open 9L22 240kV line (Whitefish Lake 825S to Heart Lake 898S)	None	None
Figure G-2020WP-18	Open 9L47 240kV line (Heart Lake 898S to RoundHill POD)	None	None
Figure G-2020WP-19	Open 9L55 240kV line (RoundHill POD to McMillan 885S)	None	None
Figure G-2020WP-20	Open 9L07 240kV line (McMillan 885S TO Dover 888S)	None	None

Figure G-2020WP-21	Open 9L58 240kV line (Ruth Lake 848S to Thickwood 951S)	None	None
Figure G-2020WP-22	Open 9L68 240kV line (Thickwood 951S TO Dover 888S)	None	None
Figure G-2020WP-23	Open 9L30 240kV line (McMillan 885S TO Dover 888S)	None	None
Figure G-2020WP-24	Open 500kV line (Thickwood 951S TO Genesee)	None	None

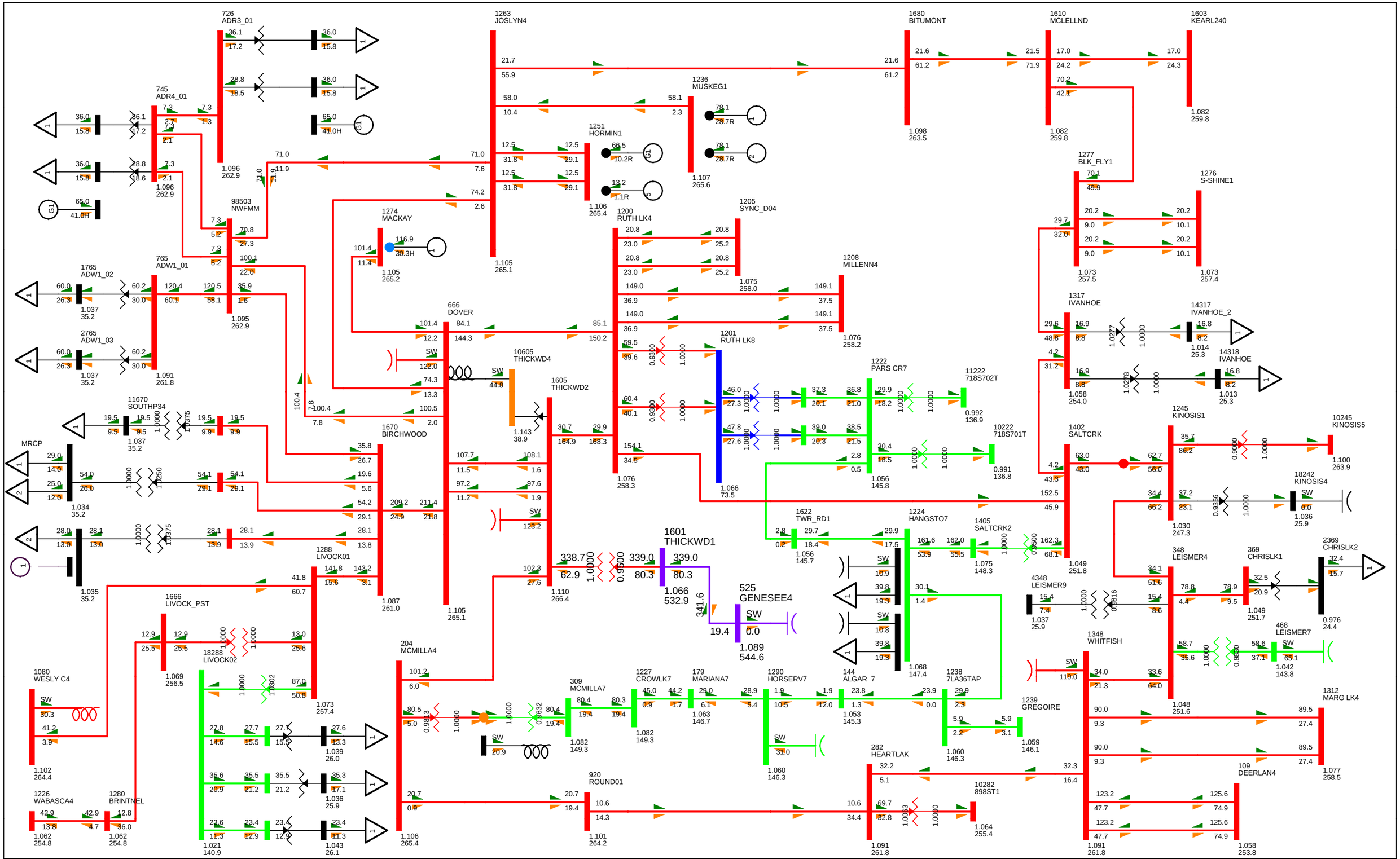

BC - Alberta (IMPORT)785.6 MW

2020WP BASE CASE
SWINGBUS 1520 FOR FC-2009-5:2021-04-30:19:24--1--1-0-0
FRI, JUN 24 2011 18:47

Figure G-2020WP-1
2020 NW FMM STUDY

Bus - VOLTAGE (kV/PU)
Branch - MW/Mvar
Equipment - MW/Mvar
100.0%RATEB
1.120OV 0.950UV
kV: <=34.500 <=69.000 <=138.000 <=240.000 <=500.000

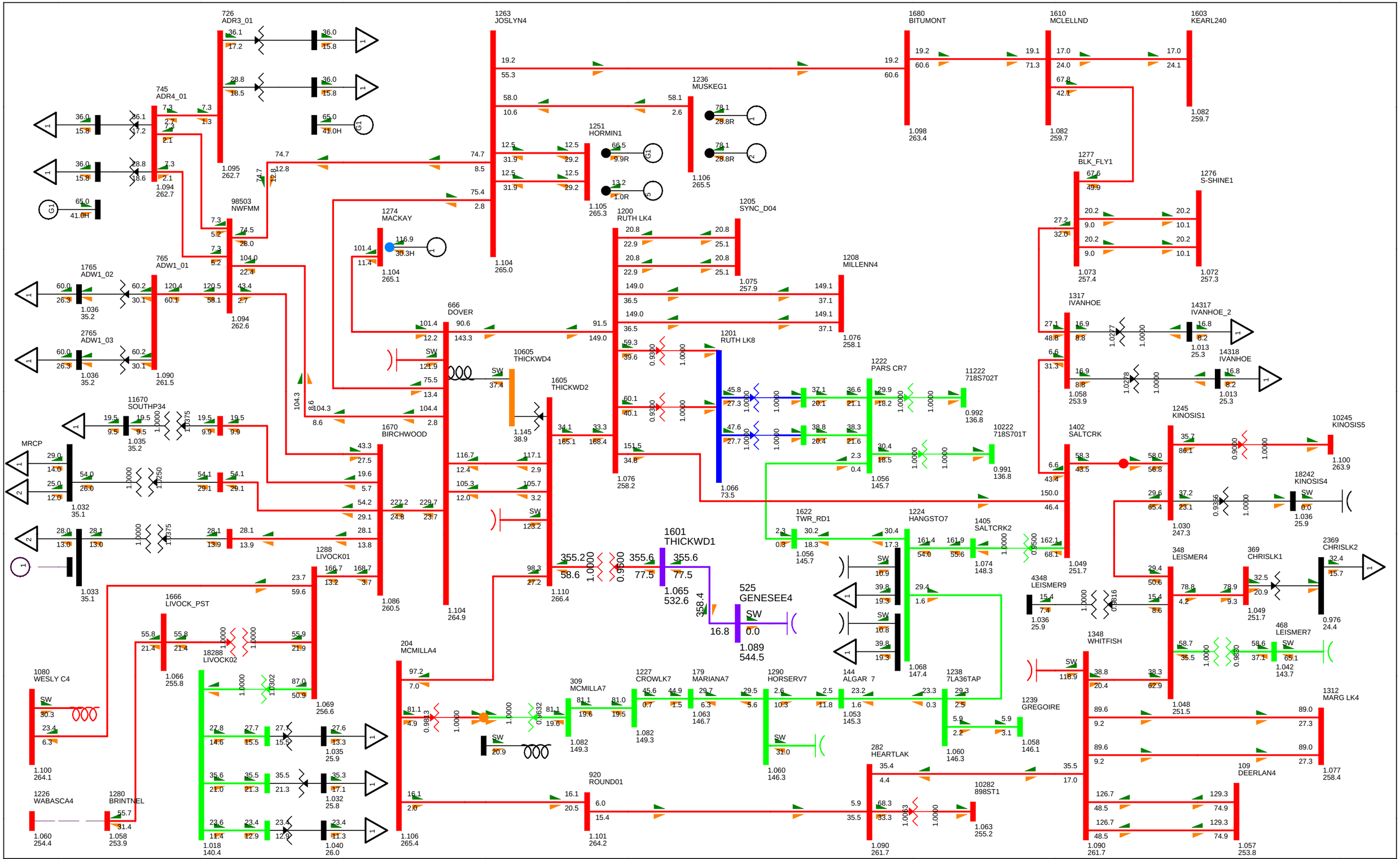

BC - Alberta (IMPORT)786.6 MW

2020WP BASE CASE
SWINGBUS 1520 FOR FC-2009-5:2021-04-30:19:24--1--1-0-0
FRI, JUN 24 2011 18:47

Figure G-2020WP-2
2020 NW FMM STUDY

Bus - VOLTAGE (kV/PU)
Branch - MW/Mvar
Equipment - MW/Mvar
100.0%RATEB
1.120OV 0.950UV
kV: <=34.500 <=69.000 <=138.000 <=240.000 <=500.000

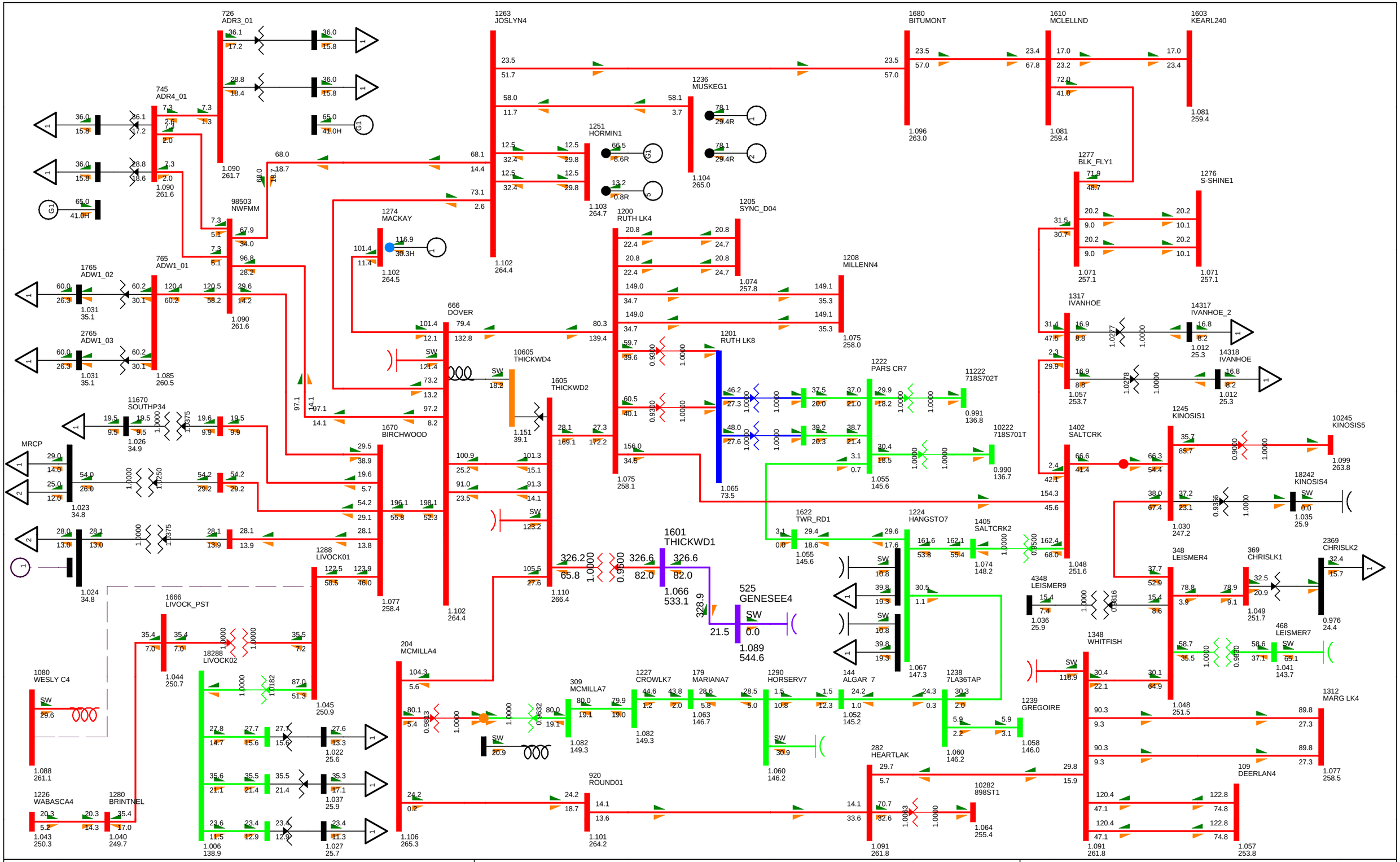

BC - Alberta (IMPORT)789.3 MW

2020WP BASE CASE
SWINGBUS 1520 FOR FC-2009-5:2021-04-30:19:24--1--1-0-0
FRI, JUN 24 2011 18:47

Figure G-2020WP-3

2020 NW FMM STUDY

Bus - VOLTAGE (kV/PU)
Branch - MW/Mvar
Equipment - MW/Mvar

100.0%RATEB
1.120OV 0.950UV
kV: <=34.500 <=69.000 <=138.000 <=240.000 <=500.000

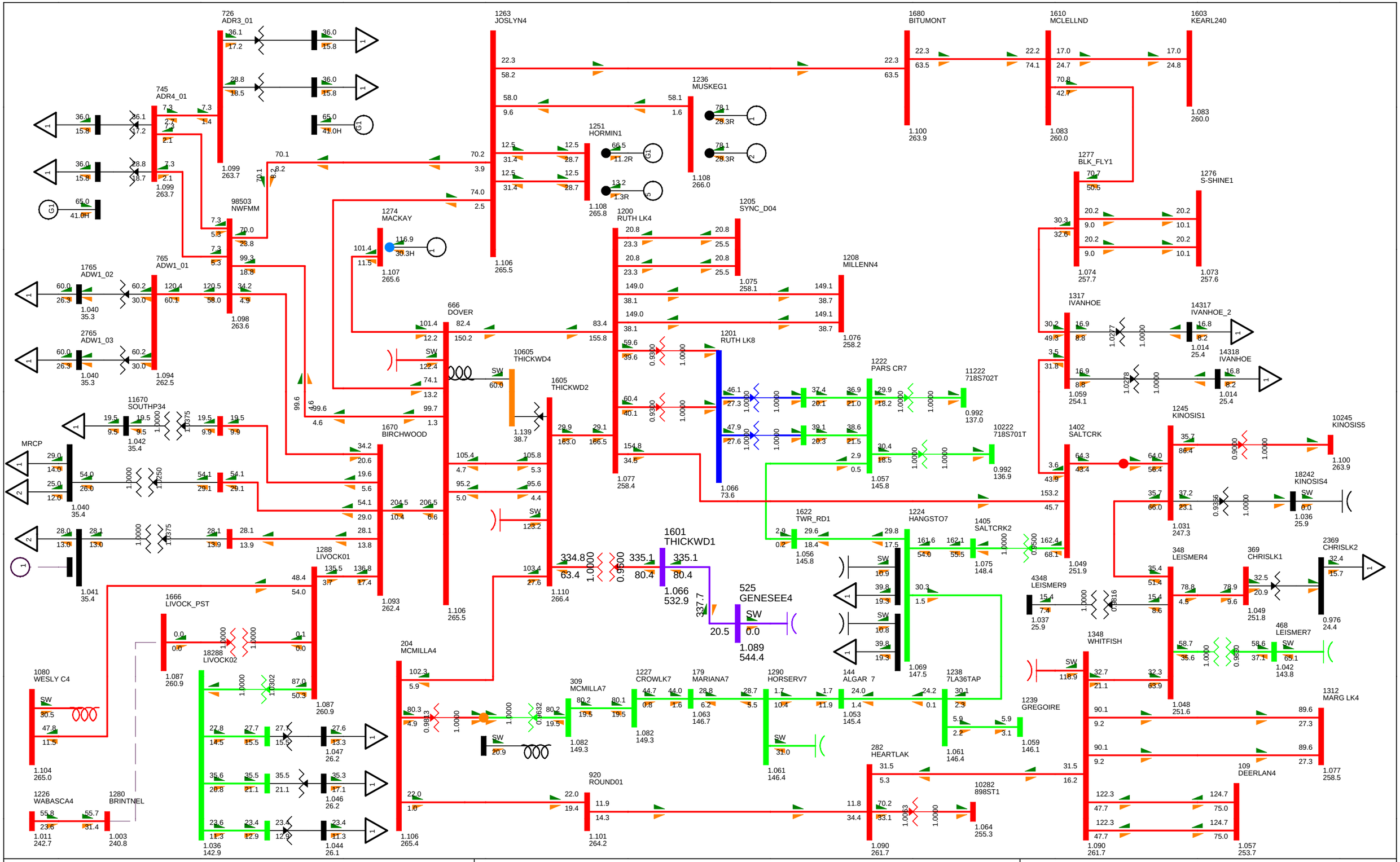

BC - Alberta (IMPORT)786.6 MW

2020WP BASE CASE
SWINGBUS 1520 FOR FC-2009-5:2021-04-30:19:24--1--1-0-0
FRI, JUN 24 2011 18:47

Figure G-2020WP-4

2020 NW FMM STUDY

Bus - VOLTAGE (kV/PU)
Branch - MW/Mvar
Equipment - MW/Mvar

100.0%RATEB
1.120OV 0.950UV
kV: <=34.500 <=69.000 <=138.000 <=240.000 <=500.000

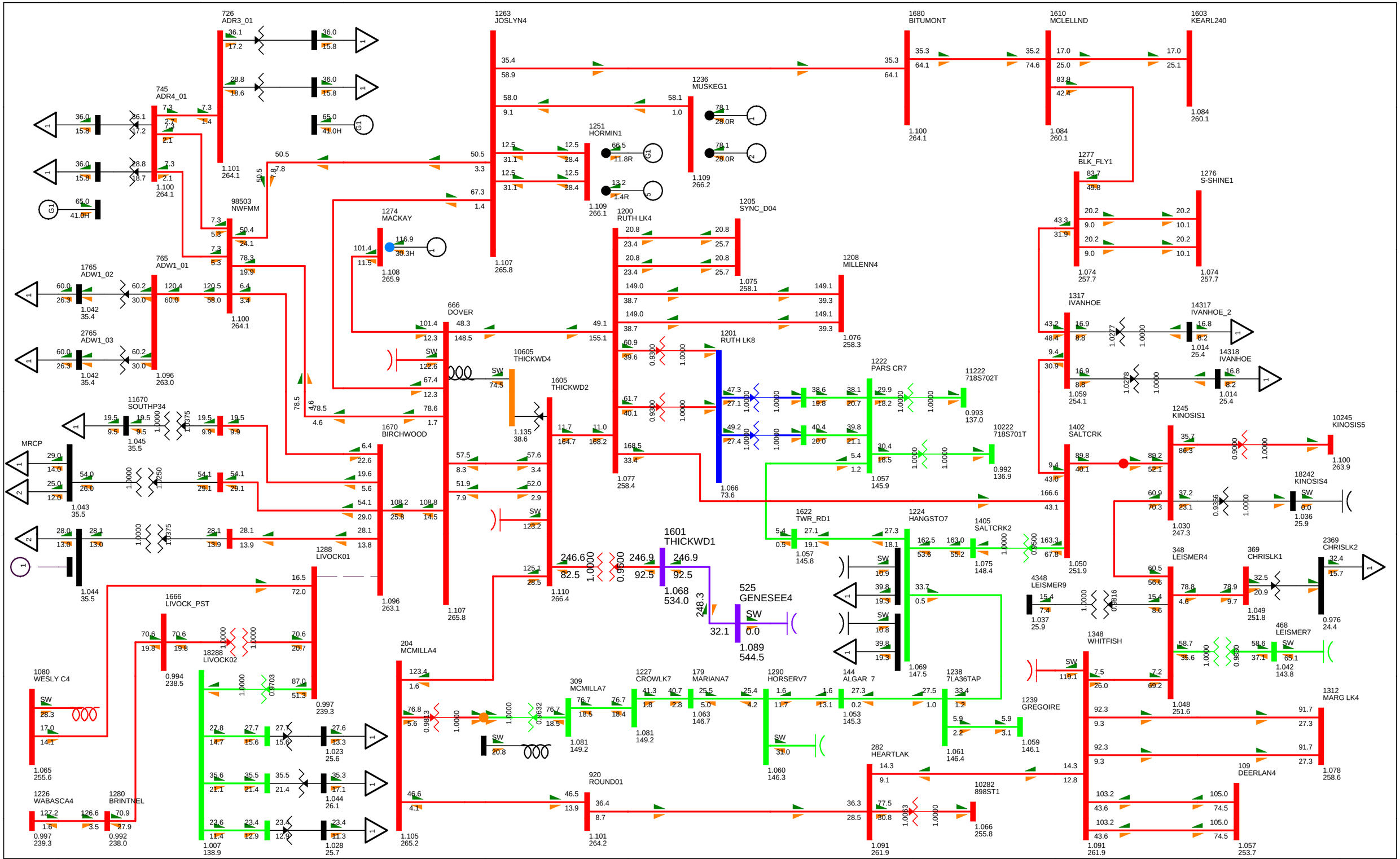

BC - Alberta (IMPORT)803.0 MW

2020WP BASE CASE
SWINGBUS 1520 FOR FC-2009-5:2021-04-30:19:24--1--1-0-0
FRI, JUN 24 2011 18:47

Figure G-2020WP-5

2020 NW FMM STUDY

Bus - VOLTAGE (kV/PU)
Branch - MW/Mvar
Equipment - MW/Mvar
100.0%RATEB
1.120OV 0.950UV
kV: <=34.500 <=69.000 <=138.000 <=240.000 <=500.000

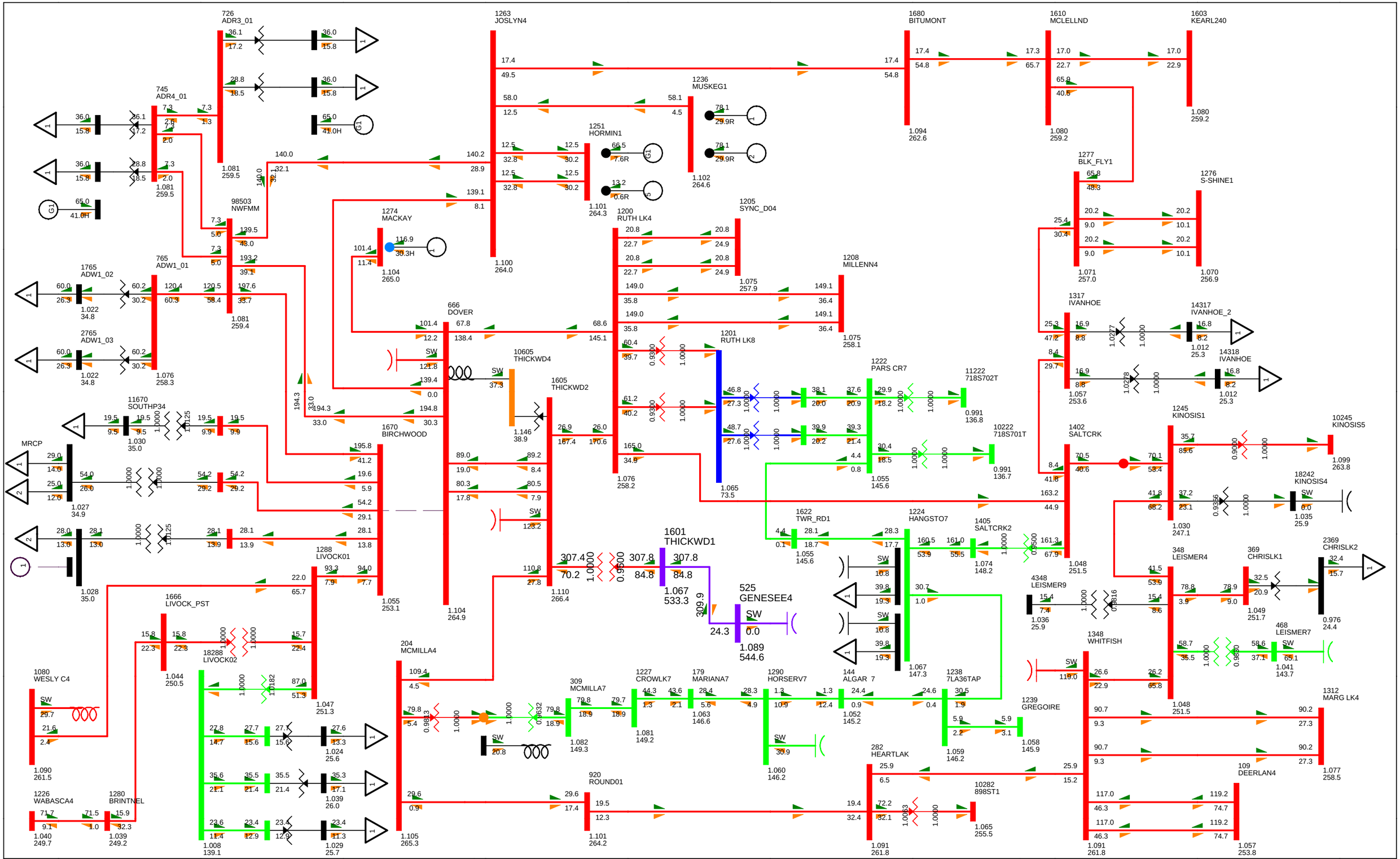
726
ADR3_01
745
ADR4_01
1263
JOSLYN4
1680
BITUMONT
1610
MCLELLND
1603
KEARL240
1236
MUSKEG1
1251
HORMIN1
1274
MACKAY
98503
NWFMM
1277
BLK_FLY1
1276
S-SHINE1
1765
ADW1_02
765
ADW1_01
2765
ADW1_03
1200
RUTH LK4
1205
SYNC_D04
1208
MILLENN4
1201
RUTH LK8
1222
PARS CR7
11222
718S702T
10222
718S701T
1317
IVANHOE
14317
IVANHOE_2
14318
IVANHOE
666
DOVER
10605
THICKWD4
1605
THICKWD2
11670
SOUTHP34
1670
BIRCHWOOD
MRCP
1245
KINOSIS1
10245
KINOSIS5
1402
SALTCRK
18242
KINOSIS4
1601
THICKWD1
525
GENESEE4
1622
TWR_RD1
1224
HANGSTO7
1405
SALTCRK2
4348
LEISMER9
348
LEISMER4
369
CHRISLK1
2369
CHRISLK2
468
LEISMER7
1288
LIVOCK01
1666
LIVOCK_PST
18288
LIVOCK02
204
MCMILLA4
309
MCMILLA7
1227
CROWLK7
179
MARIANA7
1290
HORSERV7
144
ALGAR 7
1238
7LA36TAP
1239
GREGOIRE
1348
WHITFISH
1312
MARG LK4
109
DEERLAN4
1080
WESLY C4
1226
WABASCA4
1280
BRINTNEL
920
ROUND01
282
HEARTLAK
10282
898ST1
1040
249.7
1039
249.2
1090
261.5
1008
139.1
1105
265.3
1104
264.9
1110
266.4
1101
264.2
1091
261.8
1065
255.5
1057
253.8
1077
258.5
1048
251.5
1049
251.7
1036
25.9
1030
247.1
1035
25.9
1099
263.8
1080
259.2
1094
262.6
1102
264.6
1101
264.3
1104
265.0
1100
264.0
1081
259.5
1081
259.4
1076
258.3
1022
34.8
1027
34.9
1028
35.0
1030
35.0
1044
250.5
1047
251.3
1024
25.6
1039
26.0
1029
25.7
1055
253.1
1075
257.9
1075
258.1
1076
258.2
1065
73.5
1055
145.6
1074
148.2
1067
147.3
1063
146.6
1052
145.2
1060
146.2
1082
149.3
1081
149.2
1059
146.2
1058
145.9
1071
257.0
1070
256.9
1057
253.6
1012
25.3
1041
143.7
1089
544.6
1067
533.3
1056
145.6
1055
145.6
1091
261.8
1012
25.3
1035
25.9
1049
251.7
1048
251.5
1036
25.9
1030
247.1
1057
253.8
1077
258.5
0.991
136.8
0.991
136.7
1.065
255.5
1.099
263.8
0.976
24.4
1.035
25.9
1.041
143.7
1.057
253.8
1.077
258.5
1.099
263.8
1.048
251.5
1.049
251.7
1.036
25.9
1.030
247.1
1.057
253.6
1.012
25.3
1.012
25.3
1.071
257.0
1.070
256.9
1.080
259.2
1.094
262.6
1.080
259.2
1.081
259.5
1.081
259.4
1.076
258.3
1.022
34.8
1.027
34.9
1.028
35.0
1.030
35.0
1.044
250.5
1.047
251.3
1.024
25.6
1.039
26.0
1.029
25.7
1.055
253.1
1.075
257.9
1.075
258.1
1.076
258.2
1.065
73.5
1.055
145.6
1.074
148.2
1.067
147.3
1.063
146.6
1.052
145.2
1.060
146.2
1.082
149.3
1.081
149.2
1.059
146.2
1.058
145.9
1.071
257.0
1.070
256.9
1.057
253.6
1.012
25.3
1.041
143.7
1.089
544.6
1.067
533.3
1.056
145.6
1.055
145.6
1.091
261.8
1.012
25.3
1.035
25.9
1.049
251.7
1.048
251.5
1.036
25.9
1.030
247.1
1.057
253.8
1.077
258.5
1.099
263.8
1.048
251.5
1.049
251.7
1.036
25.9
1.030
247.1
1.057
253.8
1.077
258.5
1.099
263.8
1.065
255.5
1.091
261.8

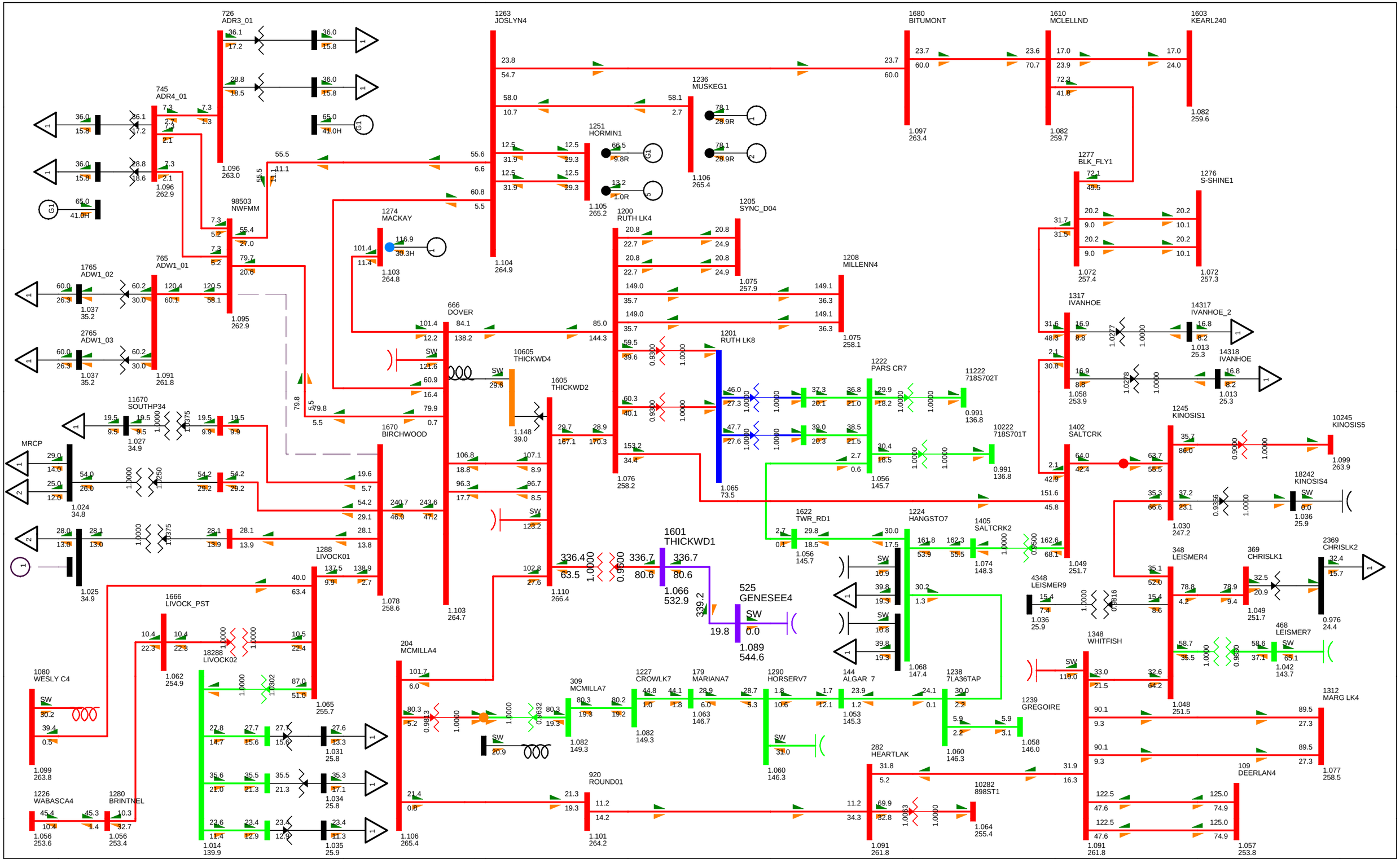

BC - Alberta (IMPORT)786.6 MW

2020WP BASE CASE
SWINGBUS 1520 FOR FC-2009-5:2021-04-30:19:24--1--1-0-0
FRI, JUN 24 2011 18:47

Figure G-2020WP-7
2020 NW FMM STUDY

Bus - VOLTAGE (kV/PU)
Branch - MW/Mvar
Equipment - MW/Mvar
100.0%RATEB
1.120OV 0.950UV
kV: <=34.500 <=69.000 <=138.000 <=240.000 <=500.000

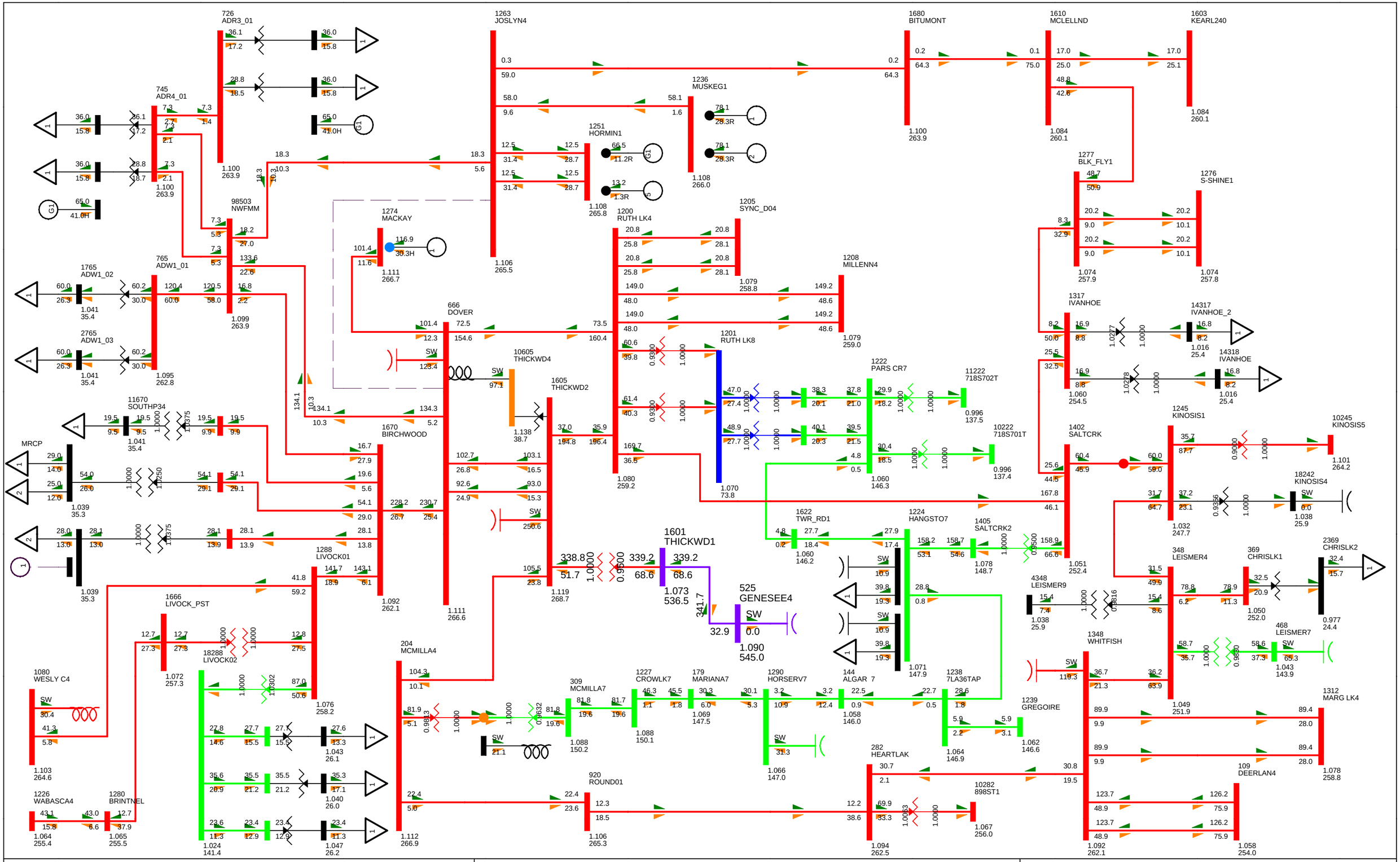

BC - Alberta (IMPORT)786.7 MW

2020WP BASE CASE
SWINGBUS 1520 FOR FC-2009-5:2021-04-30:19:24--1--1-0-0
FRI, JUN 24 2011 18:48

Figure G-2020WP-8

2020 NW FMM STUDY

Bus - VOLTAGE (kV/PU)
Branch - MW/Mvar
Equipment - MW/Mvar

100.0%RATEB
1.120OV 0.950UV
kV: <=34.500 <=69.000 <=138.000 <=240.000 <=500.000

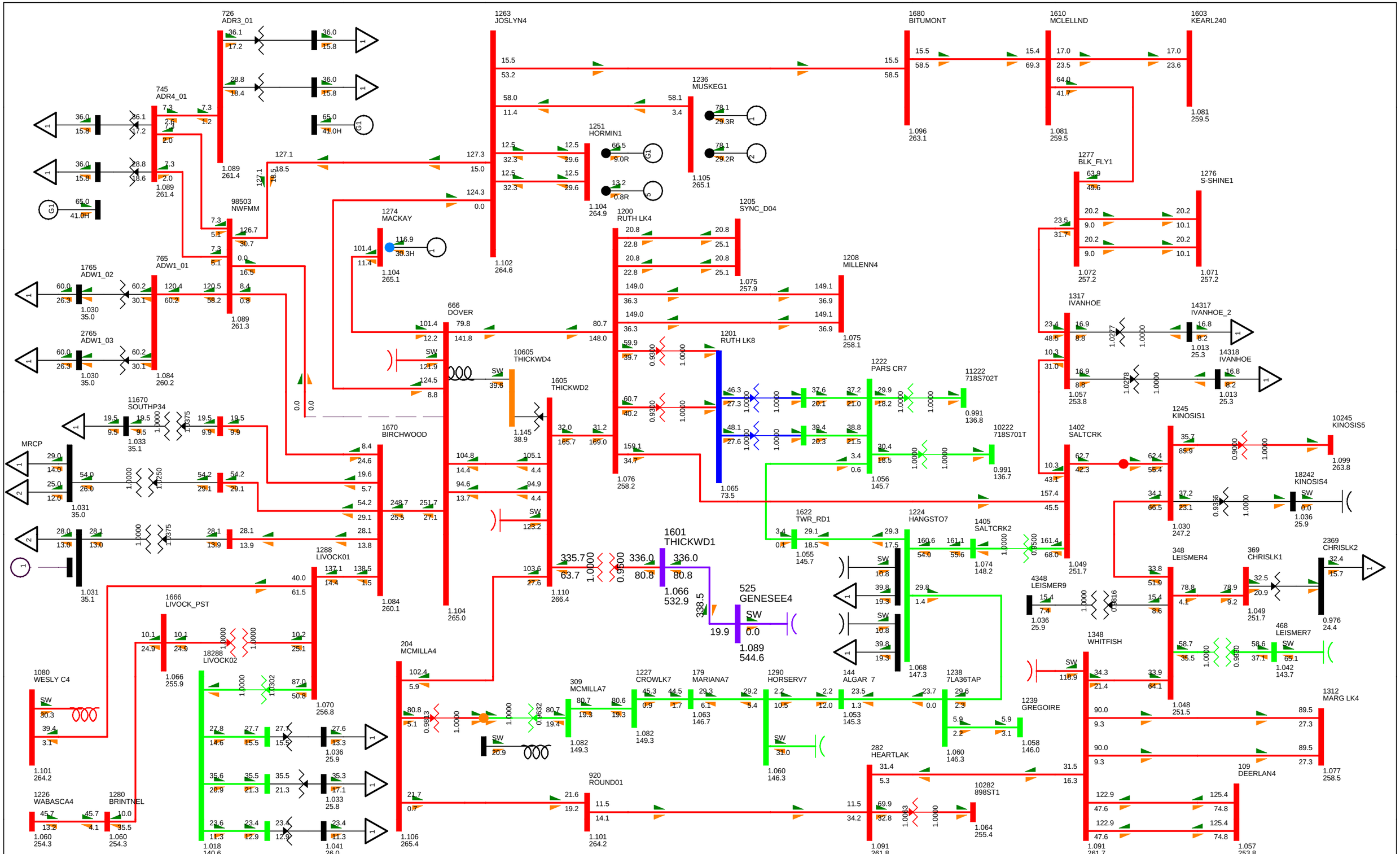

BC - Alberta (IMPORT)787.2 MW

2020WP BASE CASE
SWINGBUS 1520 FOR FC-2009-5:2021-04-30:19:24--1--1-0-0
FRI, JUN 24 2011 18:48

Figure G-2020WP-9

2020 NW FMM STUDY

Bus - VOLTAGE (kV/PU)
Branch - MW/Mvar
Equipment - MW/Mvar
100.0%RATEB
1.120OV 0.950UV
kV: <=34.500 <=69.000 <=138.000 <=240.000 <=500.000

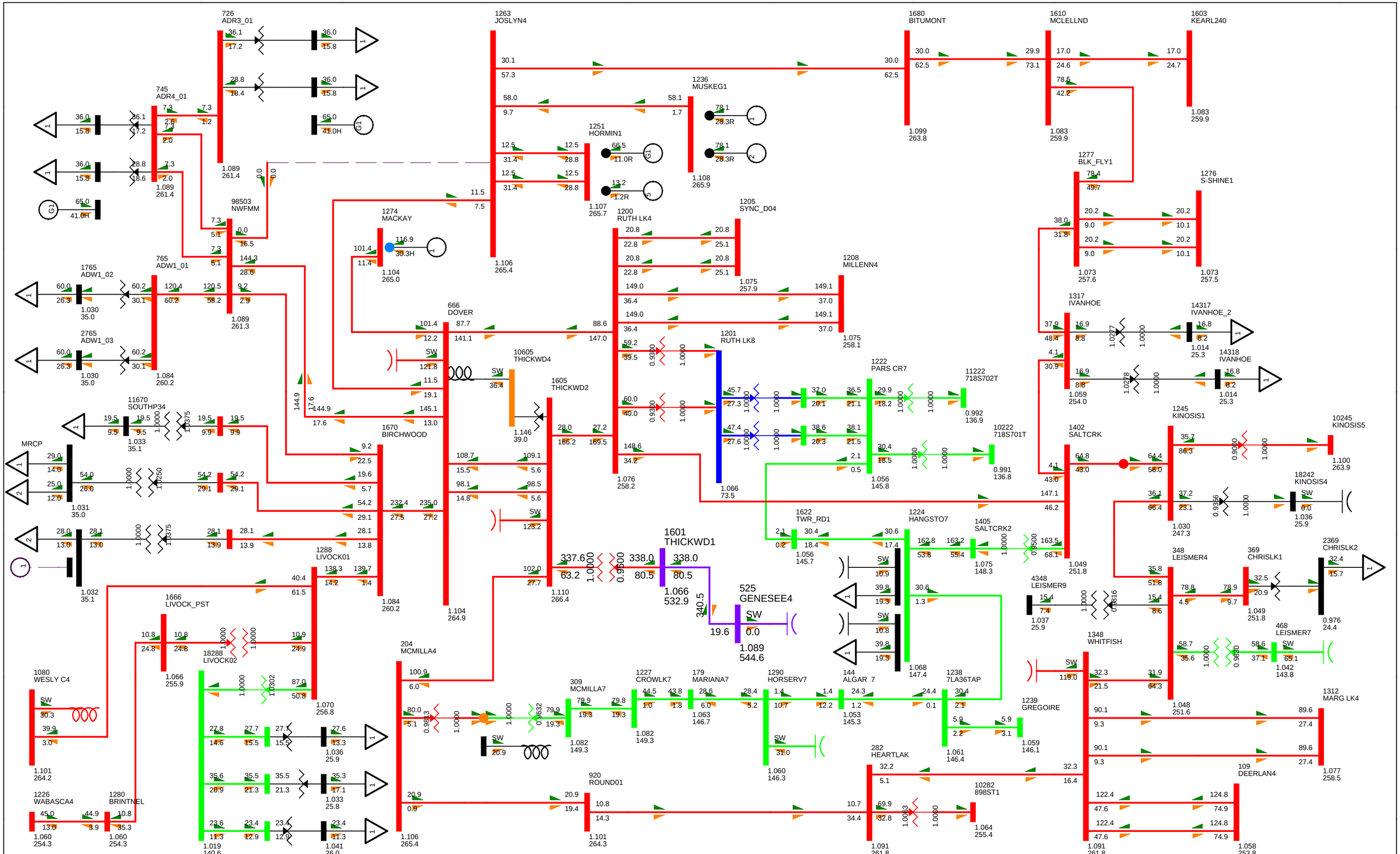
726 ADR3_01
745 ADR4_01
1263 JOSLYN4
1680 BITUMONT
1610 MCLELLND
1603 KEARL240
1236 MUSKEG1
1251 HORMIN1
1277 BLK_FLY1
1276 S-SHINE1
98503 NWFMM
1274 MACKAY
1200 RUTH LK4
1205 SYNC_D04
1208 MILLENN4
1765 ADW1_02
765 ADW1_01
2765 ADW1_03
666 DOVER
10605 THICKWD4
1605 THICKWD2
1201 RUTH LK8
1222 PARS CR7
11222 718S702T
10222 718S701T
1317 IVANHOE
14317 IVANHOE_2
14318 IVANHOE
1402 SALTCRK
1245 KINOSIS1
10245 KINOSIS5
18242 KINOSIS4
11670 SOUTHP34
MRCP
1670 BIRCHWOOD
1288 LIVOCK01
1666 LIVOCK_PST
18288 LIVOCK02
1601 THICKWD1
525 GENESEE4
1622 TWR_RD1
1224 HANGSTO7
1405 SALTCRK2
4348 LEISMER9
348 LEISMER4
369 CHRISLK1
2369 CHRISLK2
468 LEISMER7
1348 WHITFISH
1312 MARG LK4
109 DEERLAN4
1239 GREGOIRE
204 MCMILLA4
309 MCMILLA7
1227 CROWLK7
179 MARIANA7
1290 HORSERV7
144 ALGAR 7
1238 7LA36TAP
920 ROUND01
282 HEARTLAK
10282 898ST1
1080 WESLY C4
1226 WABASCA4
1280 BRINTNEL
SW
G1
BC - Alberta (IMPORT)786.4 MW
2020WP BASE CASE
SWINGBUS 1520 FOR FC-2009-5:2021-04-30:19:24--1--1-0-0
FRI, JUN 24 2011 18:48
Figure G-2020WP-10
2020 NW FMM STUDY
Bus - VOLTAGE (kV/PU)
Branch - MW/Mvar
Equipment - MW/Mvar
100.0%RATEB
1.120OV 0.950UV
kV: <=34.500 <=69.000 <=138.000 <=240.000 <=500.000

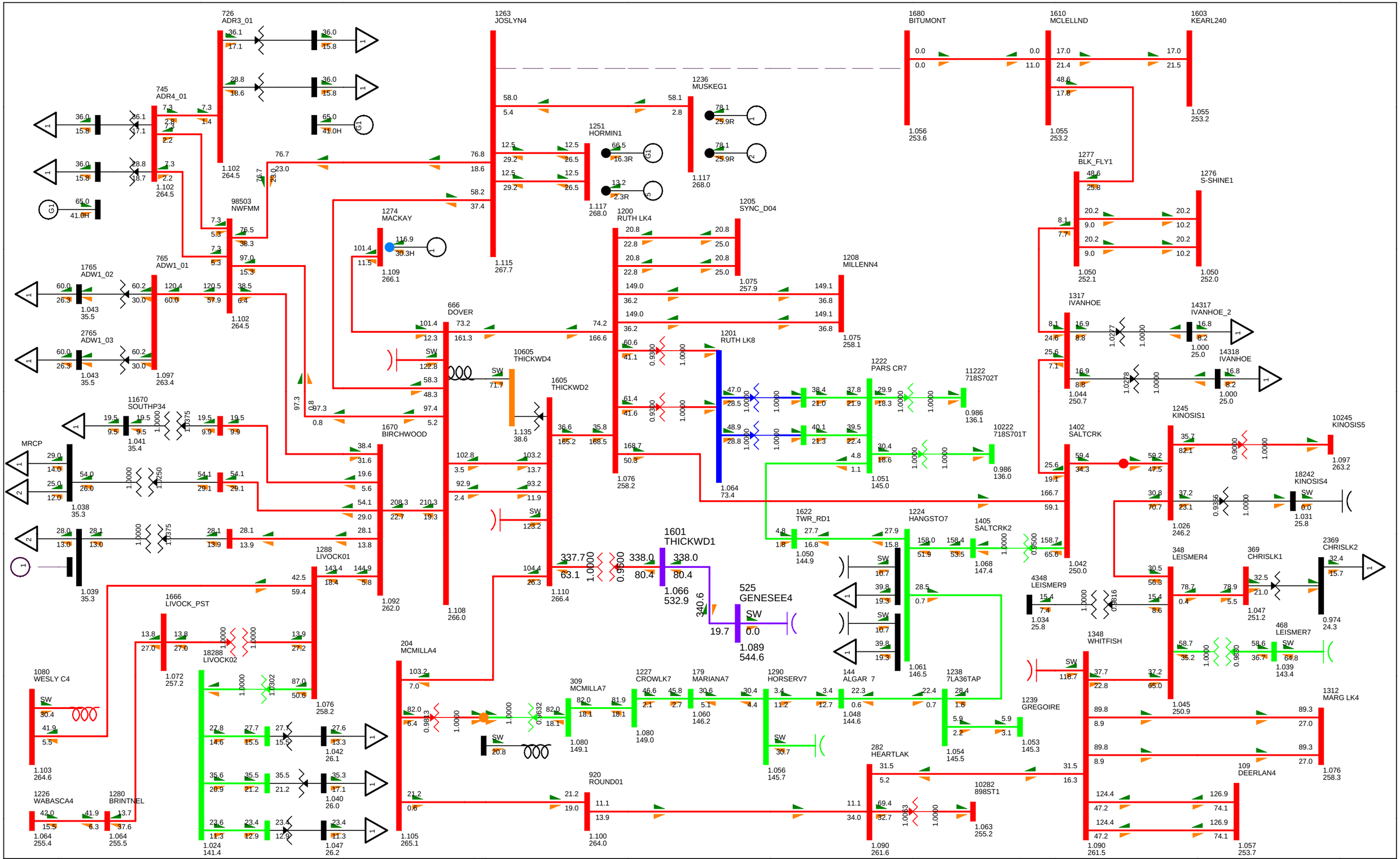

BC - Alberta (IMPORT)786.1 MW

2020WP BASE CASE
SWINGBUS 1520 FOR FC-2009-5:2021-04-30:19:24--1--1-0-0
FRI, JUN 24 2011 18:48

Figure G-2020WP-11
2020 NW FMM STUDY

Bus - VOLTAGE (kV/PU)
Branch - MW/Mvar
Equipment - MW/Mvar
100.0%RATEB
1.120OV 0.950UV
kV: <=34.500 <=69.000 <=138.000 <=240.000 <=500.000

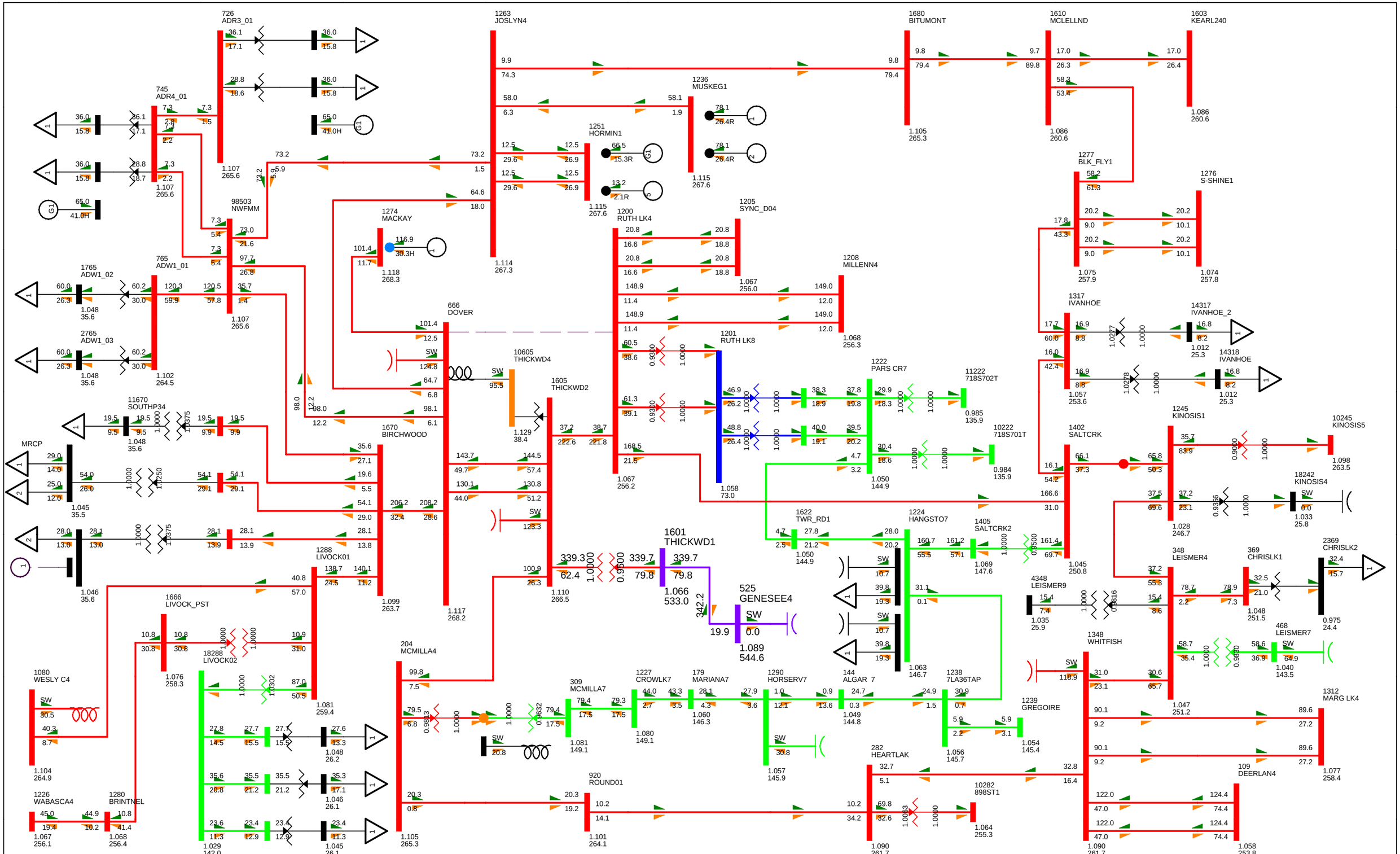

BC - Alberta (IMPORT)786.6 MW

2020WP BASE CASE
SWINGBUS 1520 FOR FC-2009-5:2021-04-30:19:24--1--1-0-0
FRI, JUN 24 2011 18:48

Figure G-2020WP-12
2020 NW FMM STUDY

Bus - VOLTAGE (kV/PU)
Branch - MW/Mvar
Equipment - MW/Mvar
100.0%RATEB
1.120OV 0.950UV
kV: <=34.500 <=69.000 <=138.000 <=240.000 <=500.000

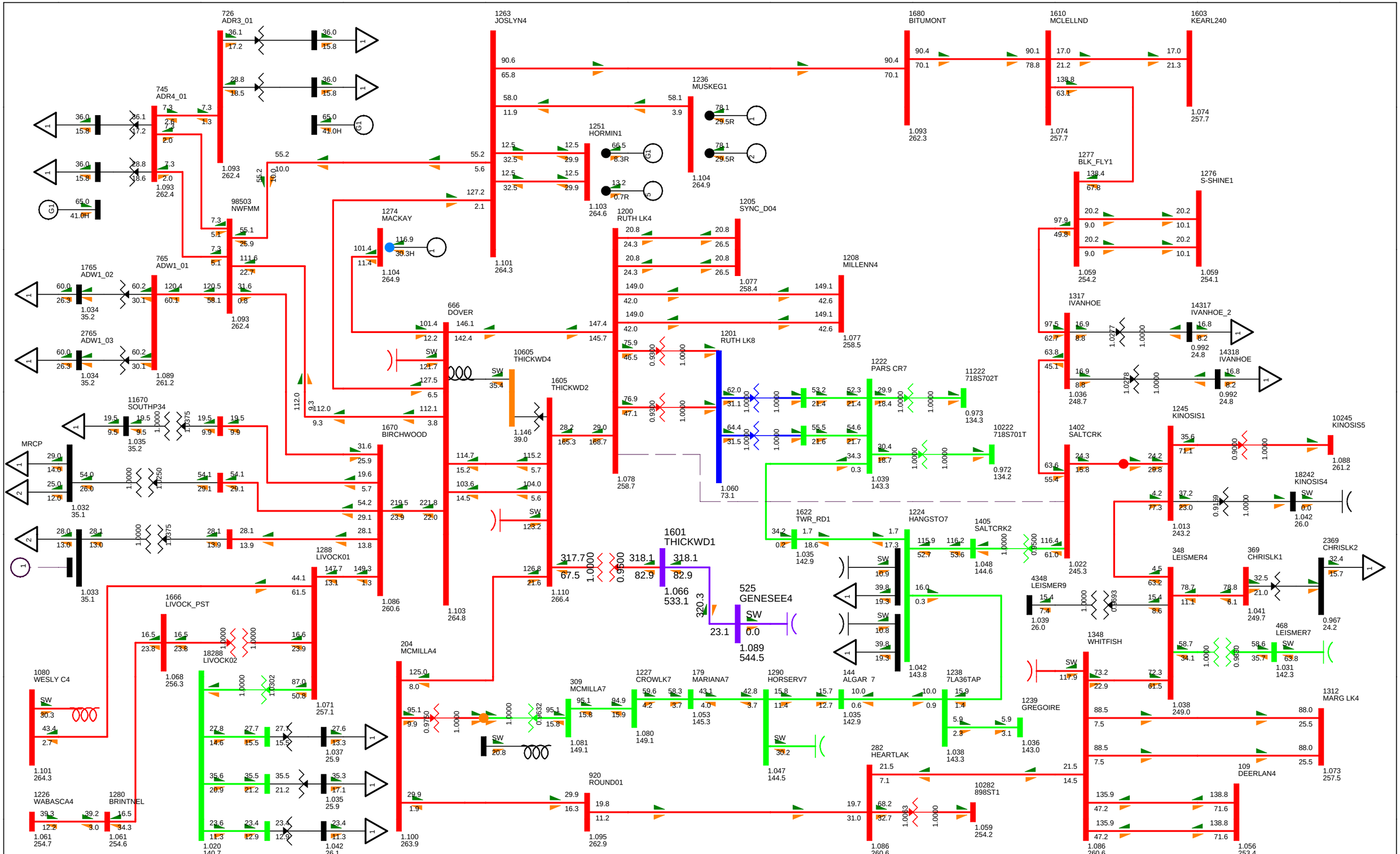
726
ADR3_01
745
ADR4_01
765
ADW1_01
1765
ADW1_02
2765
ADW1_03
98503
NWFMM
1263
JOSLYN4
1236
MUSKEG1
1251
HORMIN1
1680
BITUMONT
1610
MCLELLND
1603
KEARL240
1277
BLK_FLY1
1276
S-SHINE1
1274
MACKAY
1200
RUTH LK4
1205
SYNC_D04
1208
MILLENN4
1201
RUTH LK8
1222
PARS CR7
11222
718S702T
10222
718S701T
666
DOVER
10605
THICKWD4
1605
THICKWD2
1670
BIRCHWOOD
11670
SOUTHP34
MRCP
1288
LIVOCK01
1666
LIVOCK_PST
18288
LIVOCK02
1601
THICKWD1
525
GENESEE4
204
MCMILLA4
309
MCMILLA7
1227
CROWLK7
179
MARIANA7
1290
HORSERV7
144
ALGAR 7
1622
TWR_RD1
1224
HANGSTO7
1405
SALTCRK2
4348
LEISMER9
1317
IVANHOE
14317
IVANHOE_2
14318
IVANHOE
1402
SALTCRK
1245
KINOSIS1
10245
KINOSIS5
18242
KINOSIS4
348
LEISMER4
369
CHRISLK1
2369
CHRISLK2
468
LEISMER7
1348
WHITFISH
1312
MARG LK4
1239
GREGOIRE
109
DEERLAN4
1080
WESLY C4
1226
WABASCA4
1280
BRINTNEL
920
ROUND01
282
HEARTLAK
10282
898ST1
BC - Alberta (IMPORT)790.4 MW
2020WP BASE CASE
SWINGBUS 1520 FOR FC-2009-5:2021-04-30:19:24--1--1-0-0
FRI, JUN 24 2011 18:48
Figure G-2020WP-13
2020 NW FMM STUDY
Bus - VOLTAGE (kV/PU)
Branch - MW/Mvar
Equipment - MW/Mvar
100.0%RATEB
1.120OV 0.950UV
kV: <=34.500 <=69.000 <=138.000 <=240.000 <=500.000

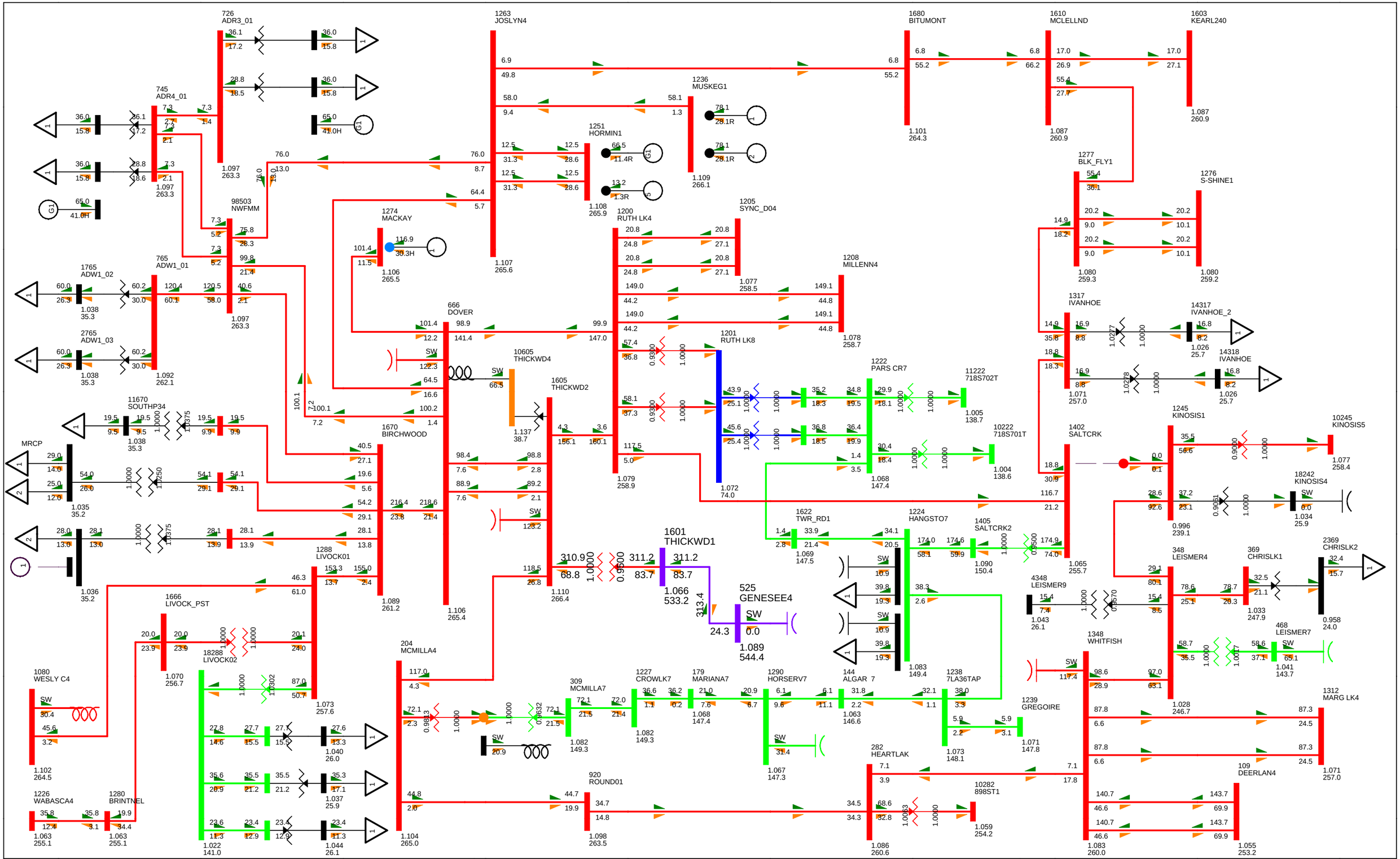

BC - Alberta (IMPORT)788.3 MW

2020WP BASE CASE
SWINGBUS 1520 FOR FC-2009-5:2021-04-30:19:24--1--1-0-0
FRI, JUN 24 2011 18:48

Figure G-2020WP-14

2020 NW FMM STUDY

Bus - VOLTAGE (kV/PU)
Branch - MW/Mvar
Equipment - MW/Mvar
100.0%RATEB
1.120OV 0.950UV
kV: <=34.500 <=69.000 <=138.000 <=240.000 <=500.000

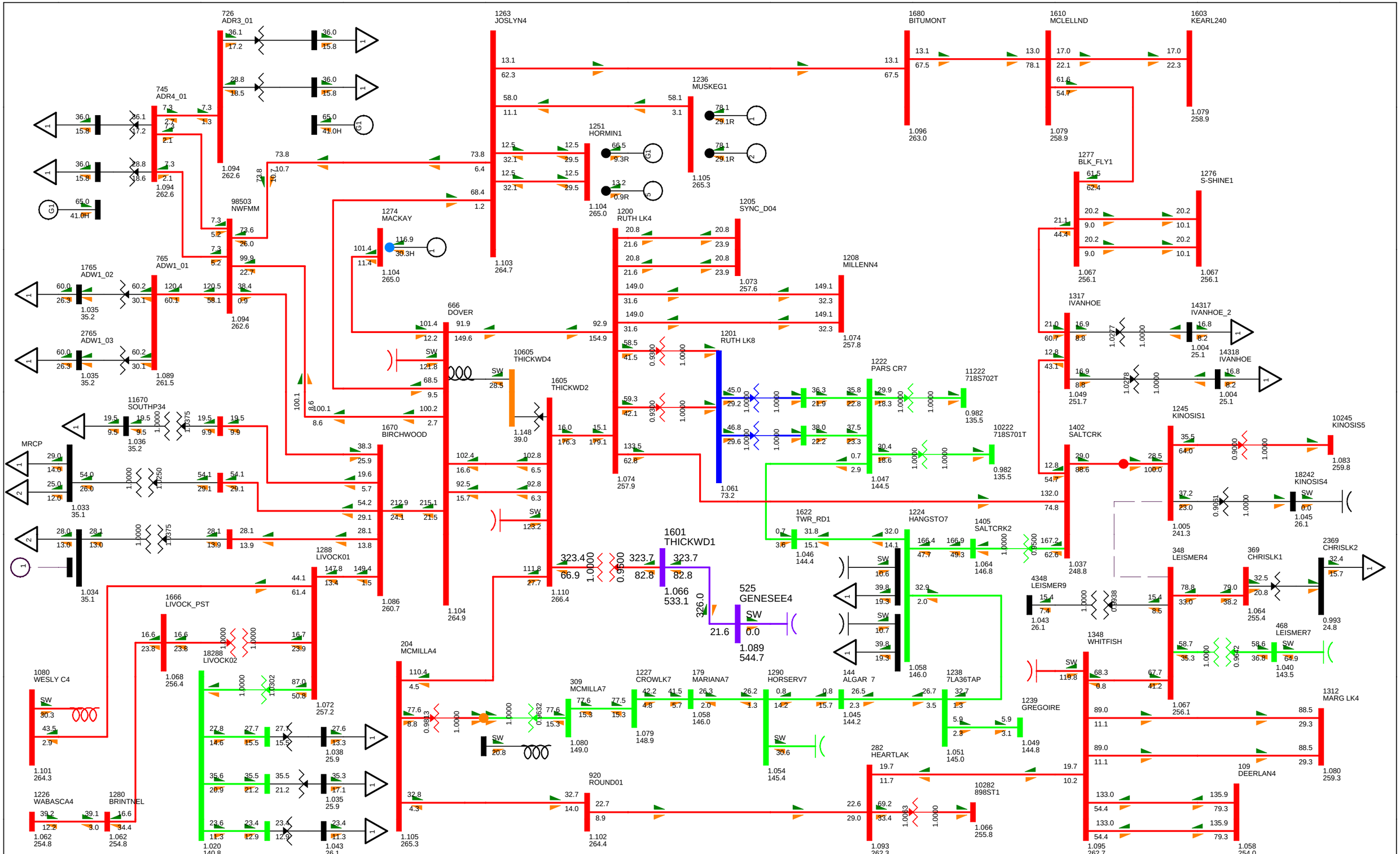
726
ADR3_01
745
ADR4_01
98503
NWFMM
765
ADW1_01
1765
ADW1_02
2765
ADW1_03
1263
JOSLYN4
1236
MUSKEG1
1251
HORMIN1
1274
MACKAY
1680
BITUMONT
1610
MCLELLND
1603
KEARL240
1277
BLK_FLY1
1276
S-SHINE1
1317
IVANHOE
14317
IVANHOE_2
14318
IVANHOE
1200
RUTH LK4
1205
SYNC_D04
1208
MILLENN4
1201
RUTH LK8
1222
PARS CR7
11222
718S702T
10222
718S701T
666
DOVER
10605
THICKWD4
1605
THICKWD2
1670
BIRCHWOOD
11670
SOUTHP34
MRCP
1288
LIVOCK01
1666
LIVOCK_PST
18288
LIVOCK02
1601
THICKWD1
525
GENESEE4
204
MCMILLA4
309
MCMILLA7
1227
CROWLK7
179
MARIANA7
1290
HORSERV7
144
ALGAR 7
1238
7LA36TAP
1239
GREGOIRE
1402
SALTCRK
1245
KINOSIS1
10245
KINOSIS5
18242
KINOSIS4
1622
TWR_RD1
1224
HANGSTO7
1405
SALTCRK2
4348
LEISMER9
348
LEISMER4
369
CHRISLK1
2369
CHRISLK2
468
LEISMER7
1348
WHITFISH
1312
MARG LK4
109
DEERLAN4
1080
WESLY C4
1226
WABASCA4
1280
BRINTNEL
920
ROUND01
282
HEARTLAK
10282
898ST1
1080
259.3
BC - Alberta (IMPORT)787.2 MW
2020WP BASE CASE
SWINGBUS 1520 FOR FC-2009-5:2021-04-30:19:24--1--1-0-0
FRI, JUN 24 2011 18:48
Figure G-2020WP-15
2020 NW FMM STUDY
Bus - VOLTAGE (kV/PU)
Branch - MW/Mvar
Equipment - MW/Mvar
100.0%RATEB
1.120OV 0.950UV
kV: <=34.500 <=69.000 <=138.000 <=240.000 <=500.000

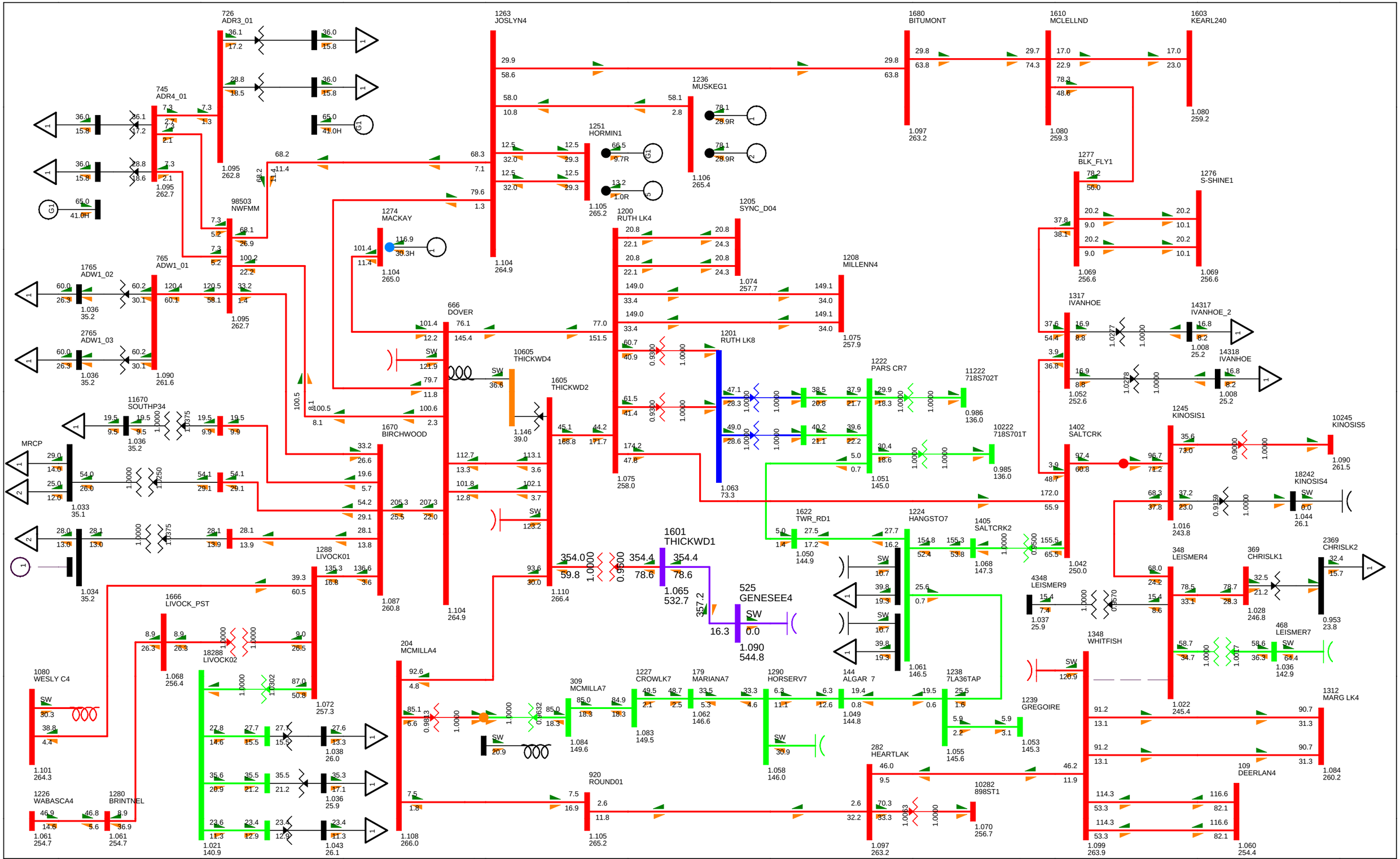
726
ADR3_01
745
ADR4_01
765
ADW1_01
1765
ADW1_02
2765
ADW1_03
98503
NWFMM
1263
JOSLYN4
1236
MUSKEG1
1251
HORMIN1
1680
BITUMONT
1610
MCLELLND
1603
KEARL240
1080
259.2
1097
263.2
1080
259.3
1277
BLK_FLY1
1276
S-SHINE1
1069
256.6
1069
256.6
1274
MACKAY
1104
265.0
1104
264.9
1105
265.2
1106
265.4
1200
RUTH LK4
1205
SYNC_D04
1074
257.7
1208
MILLENN4
1075
257.9
1201
RUTH LK8
1063
73.3
1222
PARS CR7
11222
718S702T
0.986
136.0
10222
718S701T
0.985
136.0
1051
145.0
666
DOVER
1104
264.9
10605
THICKWD4
1605
THICKWD2
1146
39.0
1110
266.4
1670
BIRCHWOOD
1075
258.0
1317
IVANHOE
14317
IVANHOE_2
1008
25.2
14318
IVANHOE
1008
25.2
1052
252.6
1245
KINOSIS1
10245
KINOSIS5
1090
261.5
1402
SALTCRK
18242
KINOSIS4
SW
0.0
1.044
26.1
1016
243.8
11670
SOUTHP34
10375
1036
35.2
MRCP
1033
35.1
10250
1288
LIVOCK01
1034
35.2
1087
260.8
1666
LIVOCK_PST
18288
LIVOCK02
1068
256.4
1072
257.3
1038
26.0
1036
25.9
1043
26.1
1021
140.9
1080
WESLY C4
1101
264.3
1226
WABASCA4
1061
254.7
1280
BRINTNEL
1061
254.7
204
MCMILLA4
1108
266.0
309
MCMILLA7
1084
149.6
1227
CROWLK7
1083
149.5
179
MARIANA7
1062
146.6
1290
HORSERV7
1058
146.0
1238
7LA36TAP
1055
145.6
1239
GREGOIRE
1053
145.3
920
ROUND01
1105
265.2
1601
THICKWD1
1065
532.7
525
GENESEE4
SW
0.0
1.090
544.8
1622
TWR_RD1
1050
144.9
1224
HANGSTO7
1061
146.5
1405
SALTCRK2
1068
147.3
1042
250.0
144
ALGAR 7
282
HEARTLAK
1097
263.2
10282
898ST1
1070
256.7
4348
LEISMER9
1037
25.9
348
LEISMER4
1022
245.4
369
CHRISLK1
1028
246.8
2369
CHRISLK2
0.953
23.8
468
LEISMER7
1036
142.9
1348
WHITFISH
1099
263.9
109
DEERLAN4
1060
254.4
1312
MARG LK4
1084
260.2
BC - Alberta (IMPORT)786.2 MW
2020WP BASE CASE
SWINGBUS 1520 FOR FC-2009-5:2021-04-30:19:24--1--1-0-0
FRI, JUN 24 2011 18:48
Figure G-2020WP-16
2020 NW FMM STUDY
Bus - VOLTAGE (kV/PU)
Branch - MW/Mvar
Equipment - MW/Mvar
100.0%RATEB
1.120OV 0.950UV
kV: <=34.500 <=69.000 <=138.000 <=240.000 <=500.000

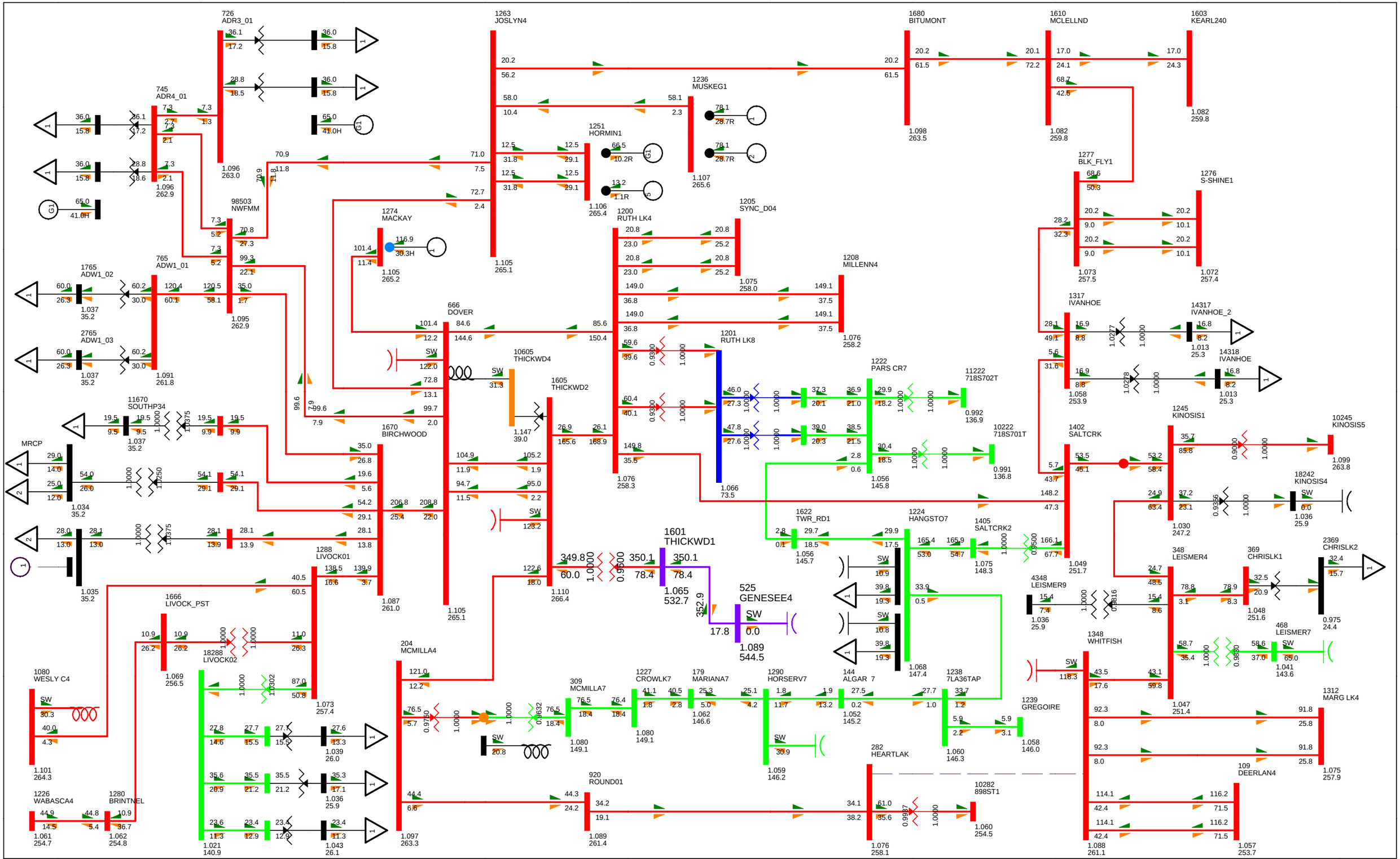
726
ADR3_01
745
ADR4_01
765
ADW1_01
98503
NWFMM
1263
JOSLYN4
1680
BITUMONT
1610
MCLELLND
1603
KEARL240
1236
MUSKEG1
1251
HORMIN1
1274
MACKAY
1200
RUTH LK4
1205
SYNC_D04
1208
MILLENN4
1201
RUTH LK8
1222
PARS CR7
11222
718S702T
10222
718S701T
1277
BLK_FLY1
1276
S-SHINE1
1317
IVANHOE
14317
IVANHOE_2
14318
IVANHOE
1765
ADW1_02
2765
ADW1_03
666
DOVER
10605
THICKWD4
1605
THICKWD2
1670
BIRCHWOOD
11670
SOUTHP34
MRCP
1245
KINOSIS1
10245
KINOSIS5
1402
SALTCRK
18242
KINOSIS4
1601
THICKWD1
525
GENESEE4
1622
TWR_RD1
1224
HANGSTO7
1405
SALTCRK2
1288
LIVOCK01
1666
LIVOCK_PST
18288
LIVOCK02
204
MCMILLA4
309
MCMILLA7
1227
CROWLK7
179
MARIANA7
1290
HORSERV7
144
ALGAR 7
1238
7LA36TAP
1239
GREGOIRE
4348
LEISMER9
348
LEISMER4
369
CHRISLK1
2369
CHRISLK2
468
LEISMER7
1348
WHITFISH
1312
MARG LK4
109
DEERLAN4
1080
WESLY C4
1226
WABASCA4
1280
BRINTNEL
920
ROUND01
282
HEARTLAK
10282
898ST1
1034
1035
1036
1037
1038
1039
1041
1043
1044
1045
1046
1047
1048
1049
1051
1053
1054
1056
1057
1058
1059
1060
1061
1062
1063
1065
1066
1068
1069
1070
1071
1072
1073
1075
1076
1080
1082
1087
1088
1089
1091
1095
1096
1097
1099
1101
1105
1106
1107
1110
1147
1204
1208
1213
1217
1218
1219
1220
1221
1222
1224
1225
1226
1227
1228
1229
1230
1231
1232
1233
1234
1235
1236
1238
1239
1240
1241
1242
1243
1244
1245
1246
1247
1248
1249
1250
1251
1252
1253
1254
1255
1256
1257
1258
1259
1260
1261
1262
1263
1264
1265
1266
1267
1268
1269
1270
1271
1272
1273
1274
1275
1276
1277

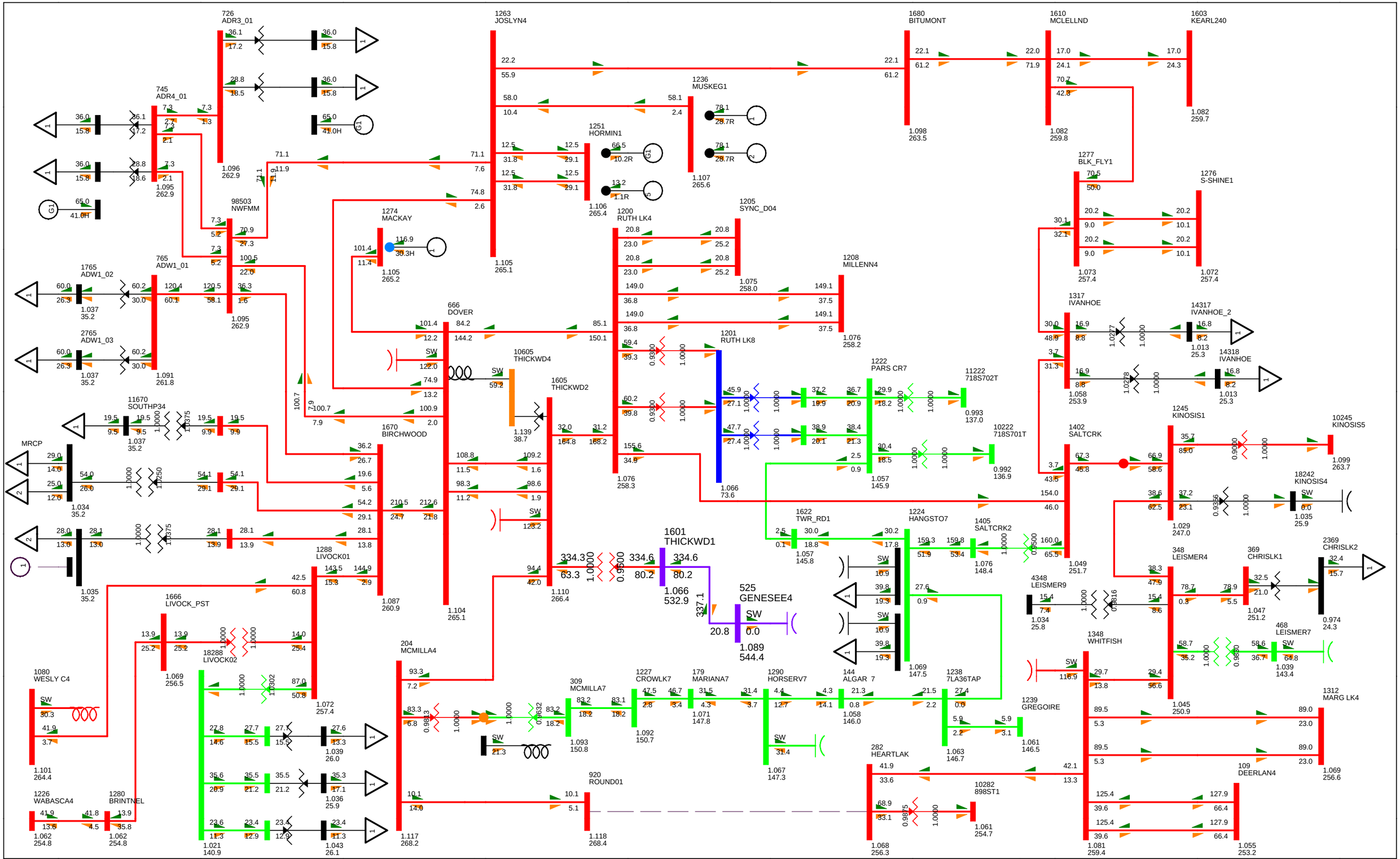

BC - Alberta (IMPORT)786.1 MW

2020WP BASE CASE
SWINGBUS 1520 FOR FC-2009-5:2021-04-30:19:24--1--1-0-0
FRI, JUN 24 2011 18:48

Figure G-2020WP-18
2020 NW FMM STUDY

Bus - VOLTAGE (kV/PU)
Branch - MW/Mvar
Equipment - MW/Mvar
100.0%RATEB
1.120OV 0.950UV
kV: <=34.500 <=69.000 <=138.000 <=240.000 <=500.000

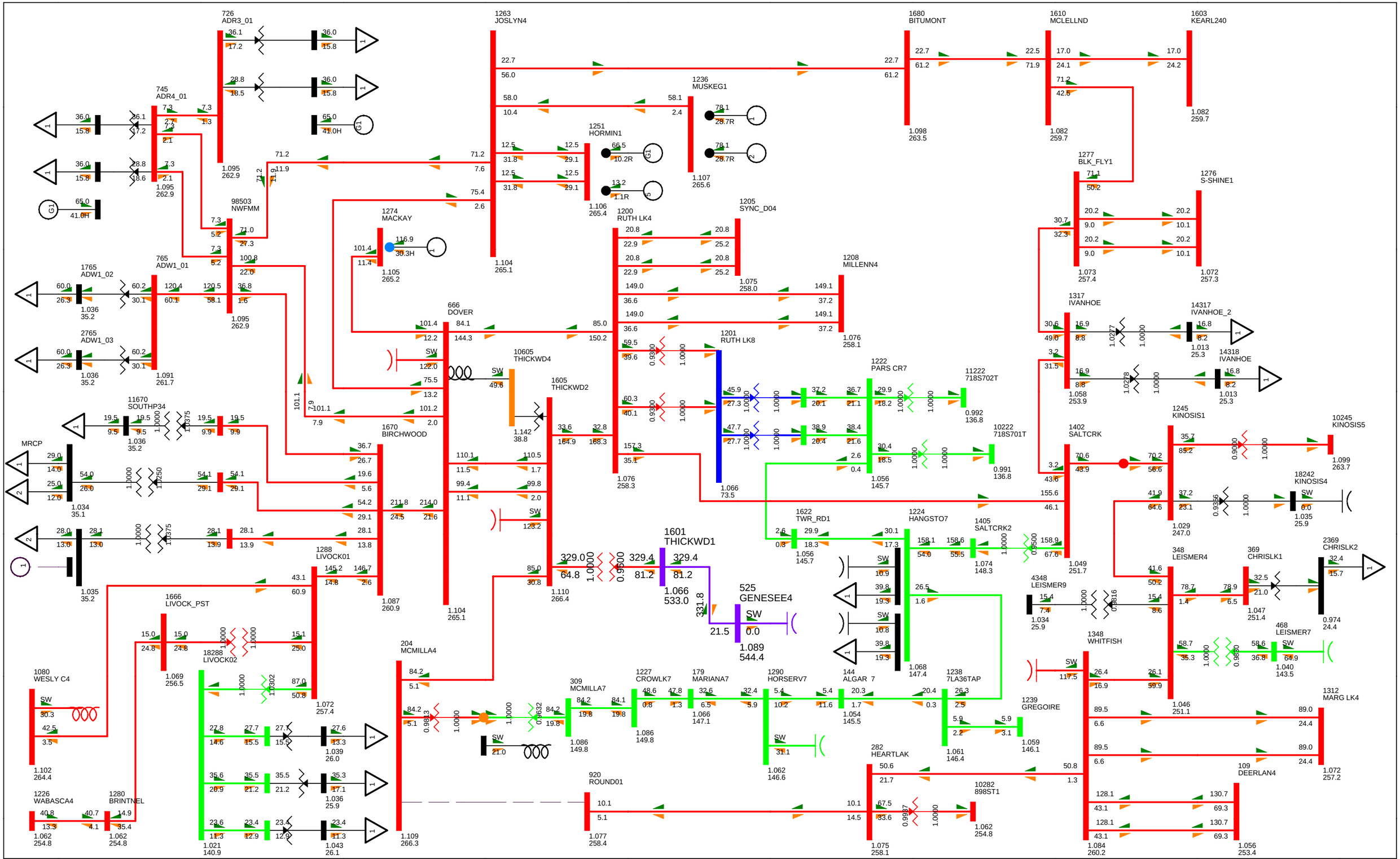

BC - Alberta (IMPORT)786.2 MW

2020WP BASE CASE
SWINGBUS 1520 FOR FC-2009-5:2021-04-30:19:24--1--1-0-0
FRI, JUN 24 2011 18:48

Figure G-2020WP-19
2020 NW FMM STUDY

Bus - VOLTAGE (kV/PU)
Branch - MW/Mvar
Equipment - MW/Mvar
100.0%RATEB
1.120OV 0.950UV
kV: <=34.500 <=69.000 <=138.000 <=240.000 <=500.000

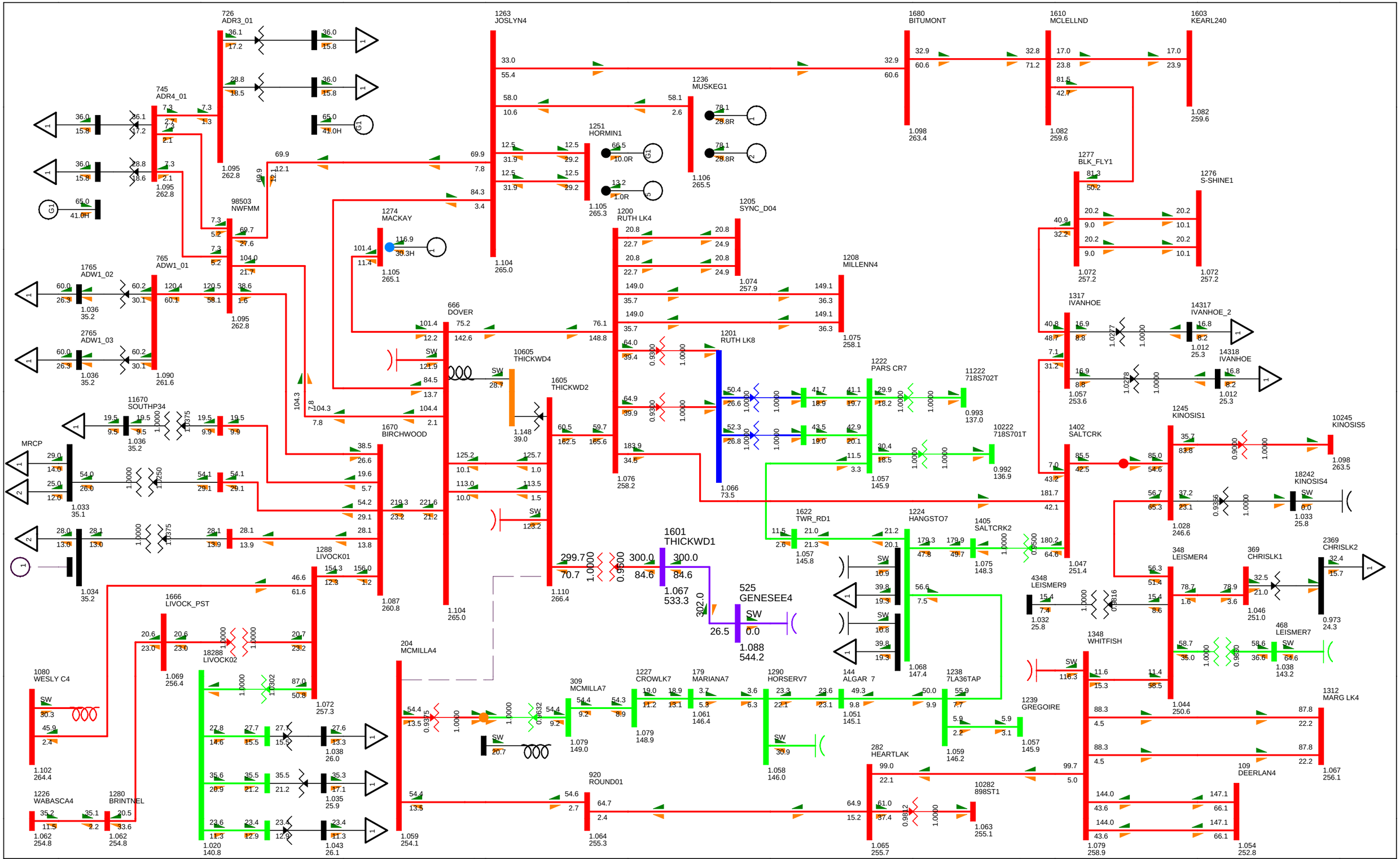

BC - Alberta (IMPORT)790.6 MW

2020WP BASE CASE
SWINGBUS 1520 FOR FC-2009-5:2021-04-30:19:24--1--1-0-0
FRI, JUN 24 2011 18:48

Figure G-2020WP-20
2020 NW FMM STUDY

Bus - VOLTAGE (kV/PU)
Branch - MW/Mvar
Equipment - MW/Mvar
100.0%RATEB
1.120OV 0.950UV
kV: <=34.500 <=69.000 <=138.000 <=240.000 <=500.000

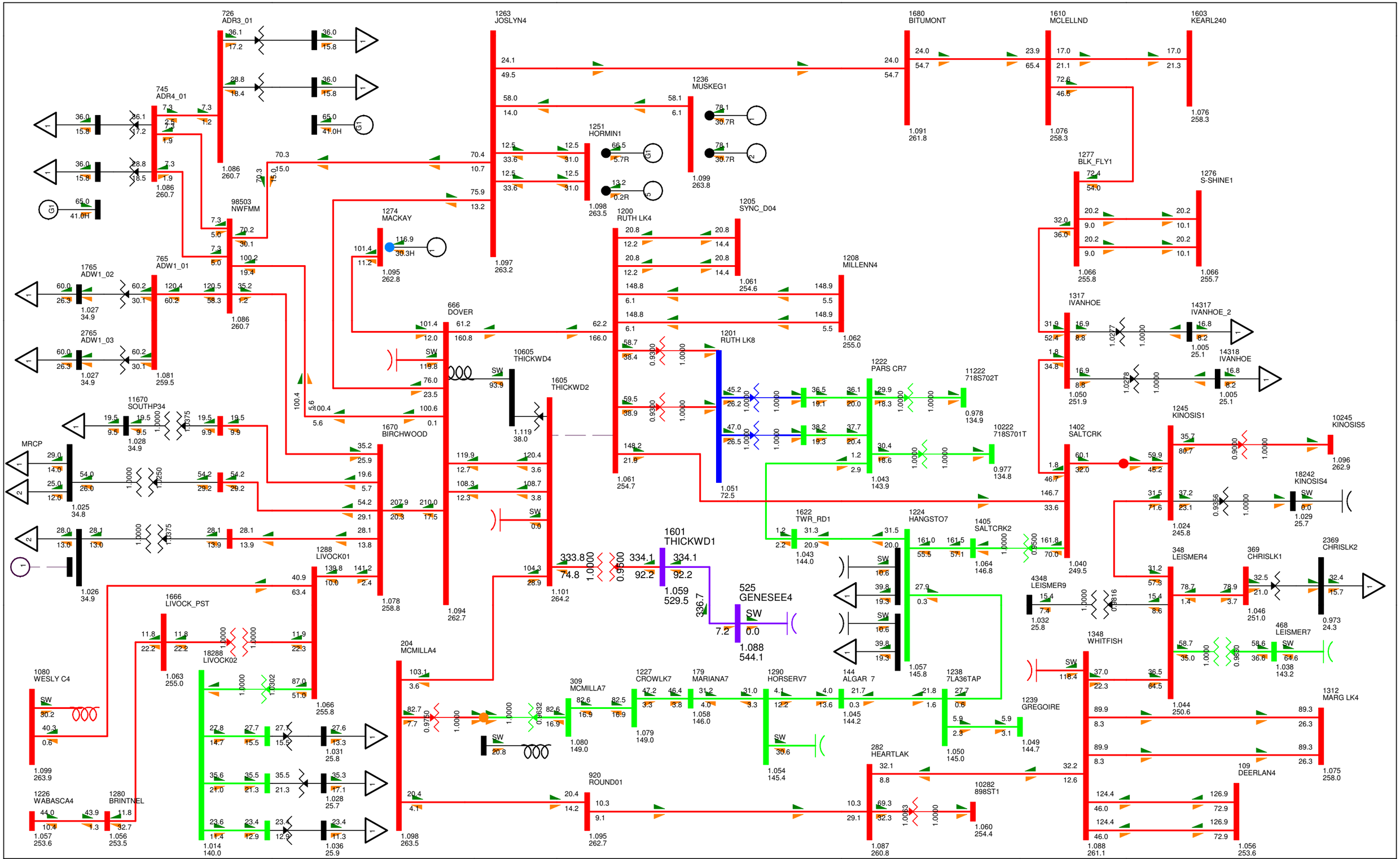
726 ADR3_01
745 ADR4_01
765 ADW1_01
1765 ADW1_02
2765 ADW1_03
98503 NWFMM
1263 JOSLYN4
1680 BITUMONT
1610 MCLELLND
1603 KEARL240
1236 MUSKEG1
1251 HORMIN1
1274 MACKAY
1277 BLK_FLY1
1276 S-SHINE1
1200 RUTH LK4
1205 SYNC_D04
1208 MILLENN4
1201 RUTH LK8
666 DOVER
10605 THICKWD4
1605 THICKWD2
1670 BIRCHWOOD
11670 SOUTHP34
MRCP
1222 PARS CR7
11222 718S702T
10222 718S701T
1317 IVANHOE
14317 IVANHOE_2
14318 IVANHOE
1402 SALTCRK
1245 KINOSIS1
10245 KINOSIS5
18242 KINOSIS4
1622 TWR_RD1
1224 HANGSTO7
1405 SALTCRK2
1601 THICKWD1
525 GENESEE4
1288 LIVOCK01
1666 LIVOCK_PST
18288 LIVOCK02
1080 WESLY C4
1226 WABASCA4
1280 BRINTNEL
204 MCMILLA4
309 MCMILLA7
1227 CROWLK7
179 MARIANA7
1290 HORSERV7
144 ALGAR 7
1238 7LA36TAP
1239 GREGOIRE
920 ROUND01
282 HEARTLAK
10282 898ST1
4348 LEISMER9
348 LEISMER4
369 CHRISLK1
2369 CHRISLK2
468 LEISMER7
1348 WHITFISH
1312 MARG LK4
109 DEERLAN4
1075 258.0
1044 250.6
1046 251.0
1024 245.8
1096 262.9
1029 25.7
1005 25.1
1050 251.9
1066 255.8
1066 255.7
1076 258.3
1076 258.3
1091 261.8
1099 263.8
1097 263.2
1095 262.8
1098 263.5
1086 260.7
1086 260.7
1081 259.5
1027 34.9
1027 34.9
1028 34.9
1025 34.8
1026 34.9
1078 258.8
1101 264.2
1094 262.7
1061 254.7
1062 255.0
1061 254.6
1051 72.5
1043 143.9
1043 144.0
1064 146.8
1040 249.5
1057 145.8
1045 144.2
1054 145.4
1058 146.0
1079 149.0
1080 149.0
1050 145.0
1049 144.7
1087 260.8
1088 261.1
1060 254.4
1095 262.7
1098 263.5
1014 140.0
1036 25.9
1031 25.8
1028 25.7
1063 255.0
1057 253.6
1056 253.5
1099 263.9
1088 544.1
1059 529.5
1101 264.2
1078 258.8
1094 262.7
1097 263.2
1095 262.8
1098 263.5
1086 260.7
1086 260.7
1081 259.5
1027 34.9
1027 34.9
1028 34.9
1025 34.8
1026 34.9
1066 255.8
1063 255.0
1057 253.6
1056 253.5
1099 263.9
1014 140.0
1036 25.9
1031 25.8
1028 25.7
1088 261.1
1060 254.4
1095 262.7
1098 263.5
1087 260.8
1054 145.4
1058 146.0
1079 149.0
1080 149.0
1050 145.0
1049 144.7
1045 144.2
1057 145.8
1064 146.8
1040 249.5
1043 144.0
1043 143.9
1051 72.5
1061 254.7
1062 255.0
1061 254.6
1095 262.8
1097 263.2
1098 263.5
1094 262.7
1101 264.2
1078 258.8

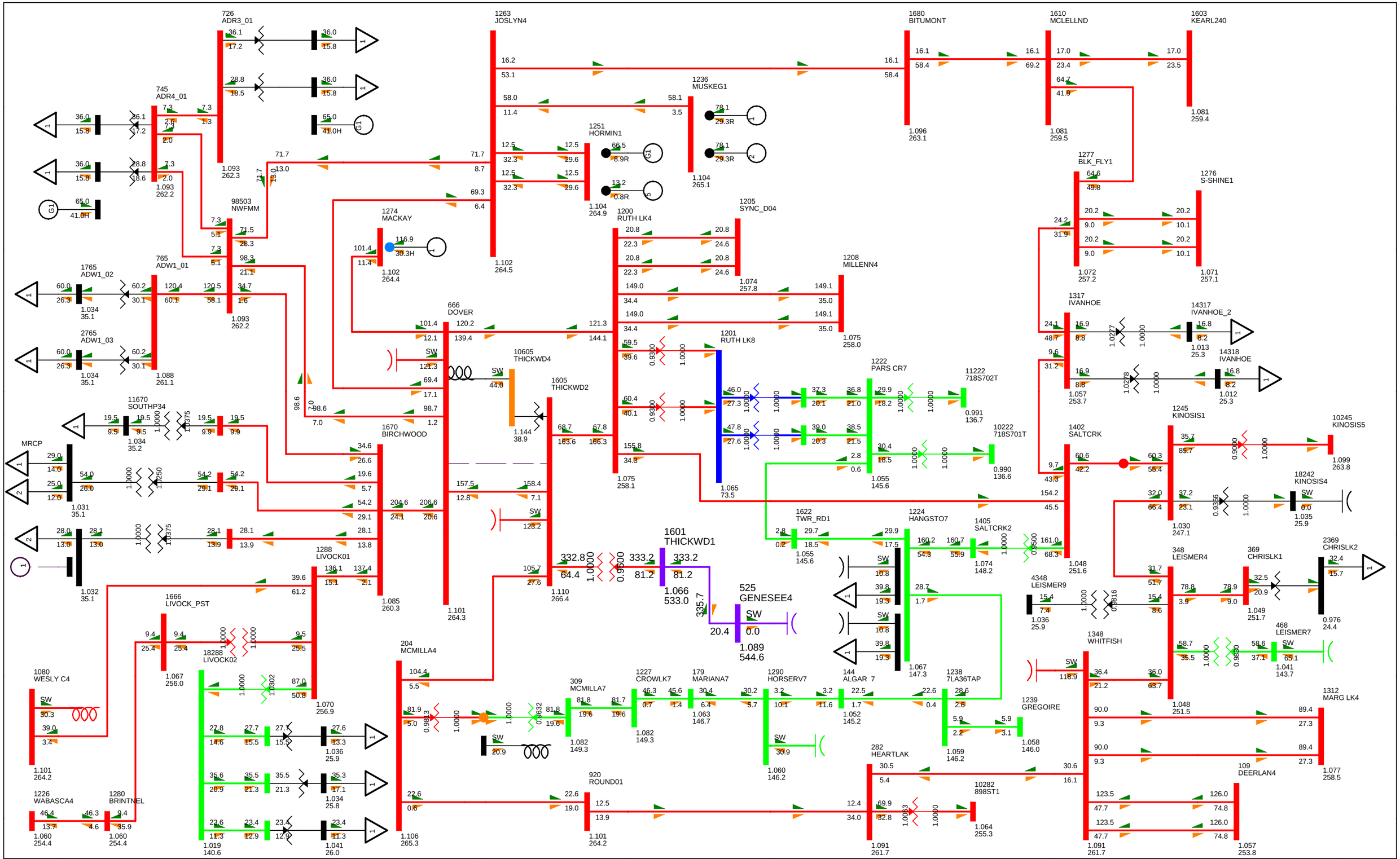
726
ADR3_01
745
ADR4_01
765
ADW1_01
1765
ADW1_02
2765
ADW1_03
11670
SOUTHP34
MRCP
1031
35.1
1093
262.3
1093
262.2
1088
261.1
1034
35.1
1034
35.2
98503
NWFMM
1093
262.2
1263
JOSLYN4
1102
264.5
1102
264.4
1274
MACKAY
1251
HORMIN1
1104
264.9
1236
MUSKEG1
1104
265.1
1680
BITUMONT
1096
263.1
1610
MCLELLND
1081
259.5
1603
KEARL240
1081
259.4
1277
BLK_FLY1
1072
257.2
1276
S-SHINE1
1071
257.1
1317
IVANHOE
14317
IVANHOE_2
14318
IVANHOE
1013
25.3
1012
25.3
1057
253.7
1245
KINOSIS1
10245
KINOSIS5
1099
263.8
1030
247.1
18242
KINOSIS4
1035
25.9
1402
SALTCRK
1048
251.6
4348
LEISMER9
1036
25.9
348
LEISMER4
1048
251.5
369
CHRISLK1
1049
251.7
2369
CHRISLK2
0.976
24.4
468
LEISMER7
1041
143.7
1348
WHITFISH
1312
MARG LK4
1077
258.5
109
DEERLAN4
1057
253.8
1239
GREGOIRE
1058
146.0
1200
RUTH LK4
1205
SYNC_D04
1074
257.8
1208
MILLENN4
1075
258.0
1201
RUTH LK8
1065
73.5
1075
258.1
1222
PARS CR7
1055
145.6
11222
718S702T
0.991
136.7
10222
718S701T
0.990
136.6
1622
TWR_RD1
1055
145.6
1224
HANGSTO7
1067
147.3
1405
SALTCRK2
1074
148.2
1601
THICKWD1
1066
533.0
525
GENESEE4
1089
544.6
666
DOVER
1101
264.3
10605
THICKWD4
1605
THICKWD2
1144
38.9
1110
266.4
1670
BIRCHWOOD
1085
260.3
1288
LIVOCK01
1032
35.1
1666
LIVOCK_PST
1067
256.0
18288
LIVOCK02
1070
256.9
1036
25.9
1034
25.8
1041
26.0
1019
140.6
204
MCMILLA4
1106
265.3
309
MCMILLA7
1082
149.3
1227
CROWLK7
1082
149.3
179
MARIANA7
1063
146.7
1290
HORSERV7
1060
146.2
1238
7LA36TAP
1059
146.2
920
ROUND01
1101
264.2
282
HEARTLAK
1091
261.7
10282
898ST1
1064
255.3
1080
WESLY C4
1101
264.2
1226
WABASCA4
1060
254.4
1280
BRINTNEL
1060
254.4
SW
SW
SW

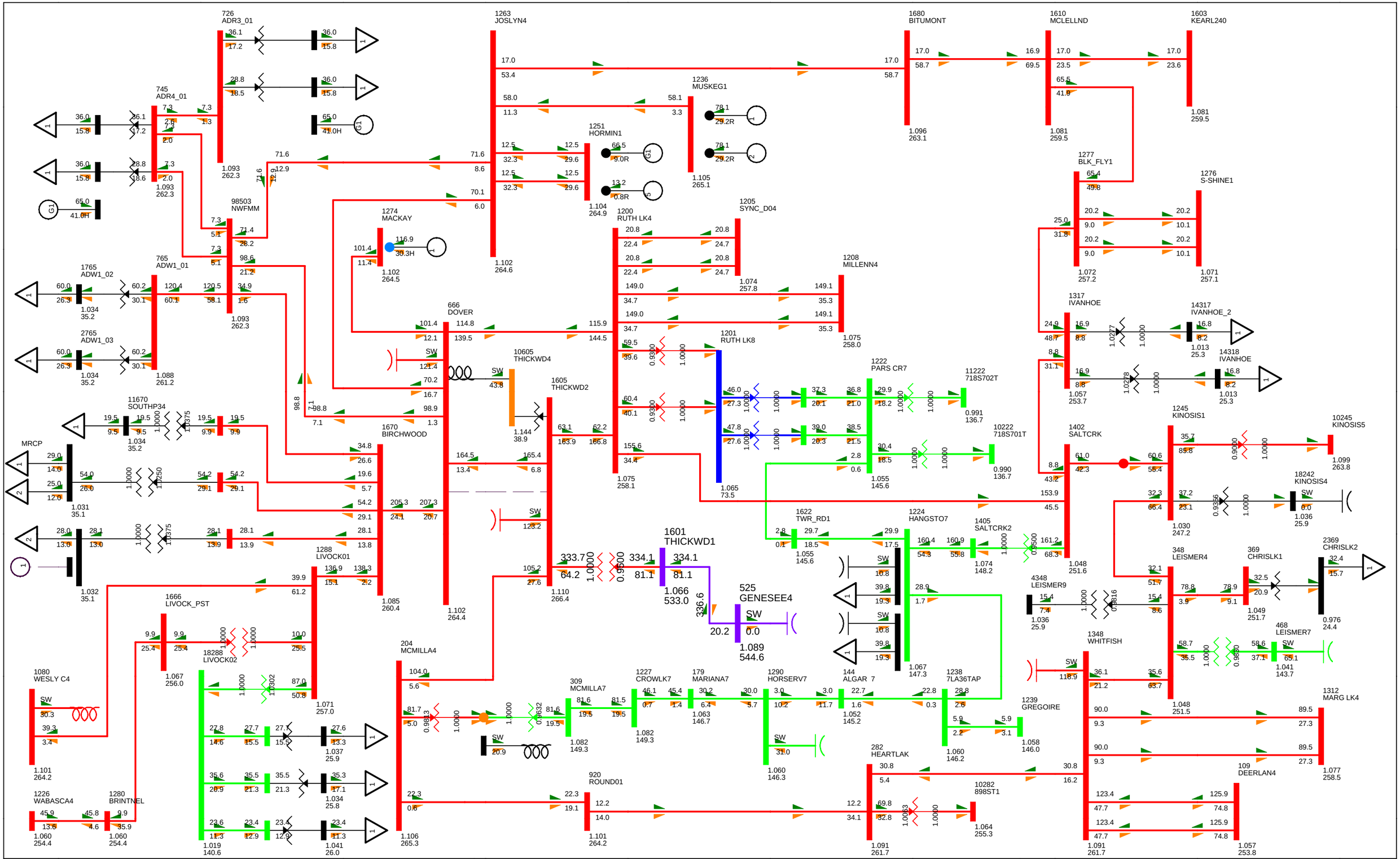
726
ADR3_01
745
ADR4_01
765
ADW1_01
1765
ADW1_02
2765
ADW1_03
98503
NWFMM
1263
JOSLYN4
1680
BITUMONT
1610
MCLELLND
1603
KEARL240
1236
MUSKEG1
1251
HORMIN1
1274
MACKAY
1277
BLK_FLY1
1276
S-SHINE1
1200
RUTH LK4
1205
SYNC_D04
1208
MILLENN4
666
DOVER
1201
RUTH LK8
1222
PARS CR7
11222
718S702T
10222
718S701T
1317
IVANHOE
14317
IVANHOE_2
14318
IVANHOE
1245
KINOSIS1
10245
KINOSIS5
18242
KINOSIS4
1402
SALTCRK
10605
THICKWD4
1605
THICKWD2
1670
BIRCHWOOD
11670
SOUTHP34
MRCP
1288
LIVOCK01
1666
LIVOCK_PST
18288
LIVOCK02
1601
THICKWD1
525
GENESEE4
204
MCMILLA4
309
MCMILLA7
1227
CROWLK7
179
MARIANA7
1290
HORSERV7
144
ALGAR 7
1238
7LA36TAP
1239
GREGOIRE
1348
WHITFISH
1312
MARG LK4
109
DEERLAN4
1622
TWR_RD1
1224
HANGSTO7
1405
SALTCRK2
4348
LEISMER9
348
LEISMER4
369
CHRISLK1
2369
CHRISLK2
468
LEISMER7
1080
WESLY C4
1226
WABASCA4
1280
BRINTNEL
920
ROUND01
282
HEARTLAK
10282
898ST1
1064
255.3
1080
WESLY C4
1101
264.2
1060
254.4
1280
BRINTNEL
1060
254.4
1031
35.1
1032
35.1
1034
35.2
1088
261.2
1093
262.3
1102
264.6
1104
264.9
1105
265.1
1096
263.1
1081
259.5
1072
257.2
1071
257.1
1057
253.7
1013
25.3
1099
263.8
1030
247.2
1036
25.9
1048
251.6
1049
251.7
1041
143.7
1077
258.5
1057
253.8
1091
261.7
1064
255.3
1060
146.2
1058
146.0
1060
146.3
1063
146.7
1082
149.3
1052
145.2
1067
147.3
1074
257.8
1075
258.0
1065
73.5
1055
145.6
1074
148.2
1048
251.5
1036
25.9
1041
143.7
1049
251.7
1030
247.2
1048
251.5
1071
257.0
1067
256.0
1037
25.9
1034
25.8
1041
26.0
1019
140.6
1106
265.3
1085
260.4
1110
266.4
1102
264.4
1102
264.5
1093
262.3
1088
261.2
1034
35.2
1031
35.1
1032
35.1
1101
264.2
1060
254.4
1060
254.4
1067
256.0
1071
257

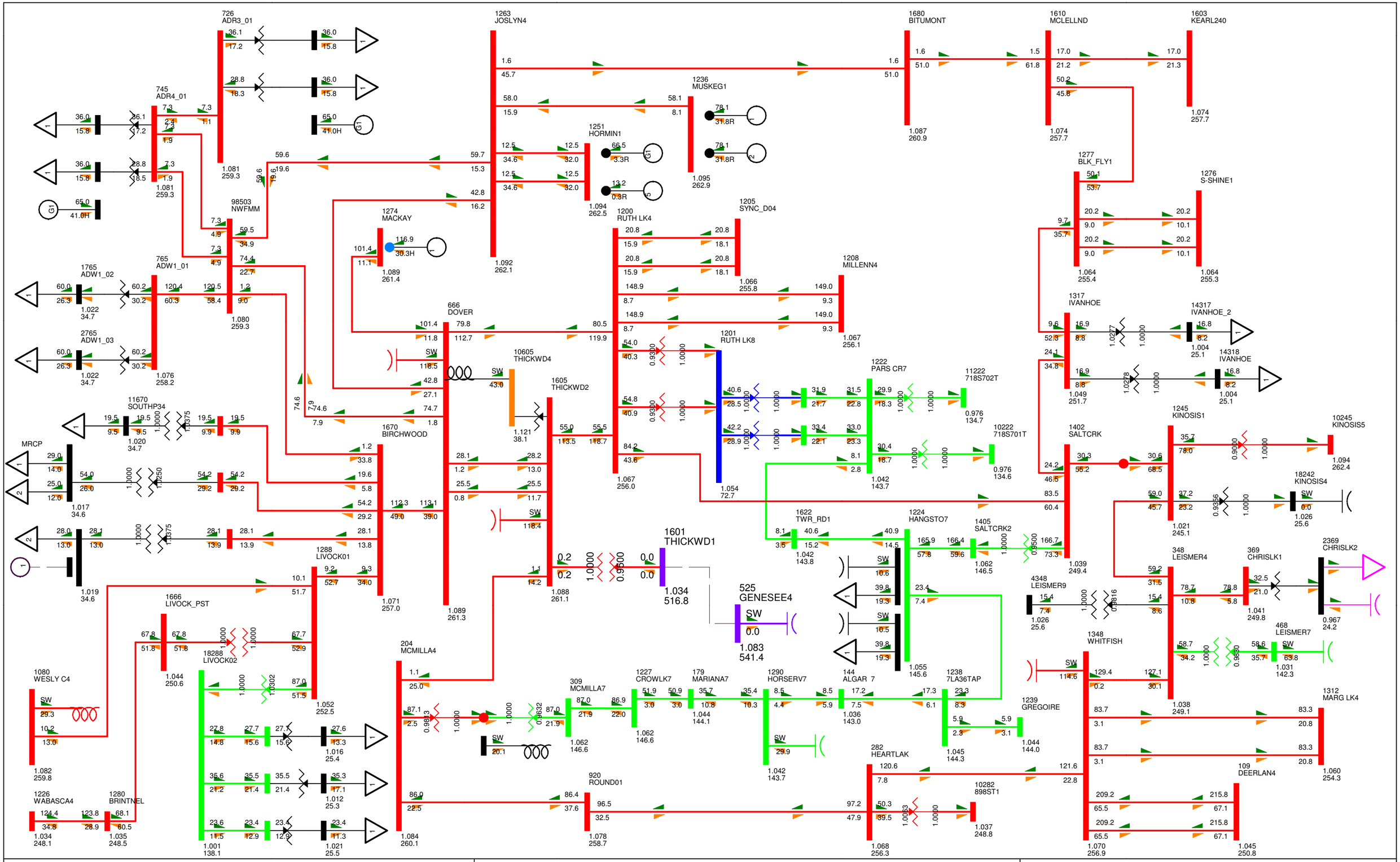

BC - Alberta (IMPORT)825.8 MW

TASMO MODEL; OUTPUT GENERATED 2010-03-01 14:06:46
SWINGBUS 1520 FOR FC-2009-5:2021-04-30:19:24--1--1-0-0
TUE, JUL 26 2011 17:41

Figure G-2020WP-24

2020 NW FMM STUDY

Bus - VOLTAGE (kV/PU)
Branch - MW/Mvar
Equipment - MW/Mvar

100.0%RATEA
1.120OV 0.950UV
kV: <=34.500 <=69.000 <=138.000 <=240.000 <=500.000 >500.000

Table G-3 Power Flow Analysis Summary- 2020 Summer Light with NW FMM

Figure Game	Contingency	Thermal Violation	Voltage Violation
Figure G-2020SL-1	Base Case (N - 0)	None	None
Figure G-2020SL-2	Open 9L56 240kV line (WABASCA 720S to Brintnell 876S)	None	None
Figure G-2020SL-3	Open 9L15 240kV line (Wesley Creek 834S to Livock 939S)	None	None
Figure G-2020SL-4	Open 9L10 240kV line (Brintnell 876S to Livock 939S)	None	None
Figure G-2020SL-5	Open 9L57 240kV line (Livock 939S to Birchwood Creek 960S)	None	None
Figure G-2020SL-6	Open 9L74 240kV line (Birchwood Creek 960S to Dover 888S)	None	None
Figure G-2020SL-7	Open 9L95 240kV line (Birchwood Creek 960S to EllsRiver)	None	None
Figure G-2020SL-8	Open 9L09 240kV line (Dover 888S to Joslyn Creek 849S)	None	None
Figure G-2020SL-9	Open 9L08 240kV line (Ells River to to Dover 888S)	None	None
Figure G-2020SL-10	Open 9L76 240kV line (Ells River to Joslyn Creek 849S)	None	None
Figure G-2020SL-11	Open 9L32 240kV line (Joslyn Creek 849S to Bitumont 941S)	None	None
Figure G-2020SL-12	Open 9L01 240kV line (Dover 888S to Ruth Lake 848S)	None	None
Figure G-2020SL-13	Open 9L18 and 9L23 240kV line (Ruth Lake 848S to Salt Creek 977S)	None	None
Figure G-2020SL-14	Open 9L990 240kV line (Salt Creek 977S to Kinosis 856S)	None	None
Figure G-2020SL-15	Open 9L990 240kV line (Kinosis 856S to Leismer 72S)	None	None
Figure G-2020SL-16	Open 9L930 240kV line (Leismer 72S to Whitefish Lake 825S)	None	None
Figure G-2020SL-17	Open 9L22 240kV line (Whitefish Lake 825S to Heart Lake 898S)	None	None
Figure G-2020SL-18	Open 9L47 240kV line (Heart Lake 898S to RoundHill POD)	None	None
Figure G-2020SL-19	Open 9L55 240kV line (RoundHill POD to McMillan 885S)	None	None
Figure G-2020SL-20	Open 9L07 240kV line (McMillan 885S TO Dover 888S)	None	None

Figure G-2020SL-21	Open 9L58 240kV line (Ruth Lake 848S to Thickwood 951S)	None	None
Figure G-2020SL-22	Open 9L68 240kV line (Thickwood 951S TO Dover 888S)	None	None
Figure G-2020SL-23	Open 9L30 240kV line (McMillan 885S TO Dover 888S)	None	None
Figure G-2020SL-24	Open 500kV line (Thickwood 951S TO Genesee)	None	None

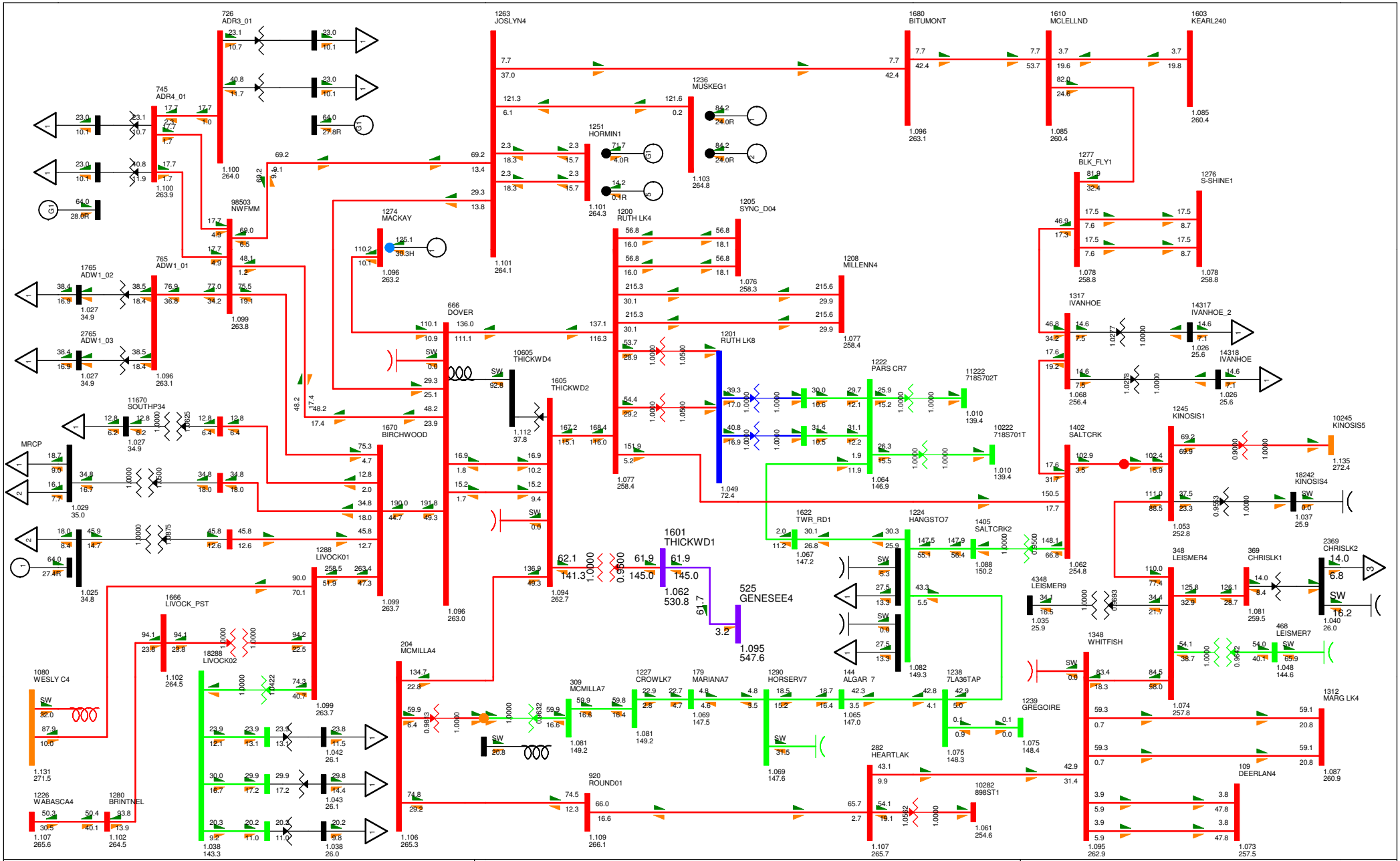

BC - Alberta (IMPORT)-35.7 MW

TASMO MODEL; OUTPUT GENERATED 2010-03-01 14:16:46
SWINGBUS 1520 FOR FC-2009-5-2020-10-31:14:14--1--1-0-0
FRI, AUG 12 2011 16:14

Figure G-2020SP-1

2020 NW FMM STUDY

Bus - VOLTAGE (kV/PU)
Branch - MW/Mvar
Equipment - MW/Mvar

100.0%RATEA
1.120OV 0.950UV
kV: <=34.500 <=69.000 <=138.000 <=240.000 <=500.000 >500.000

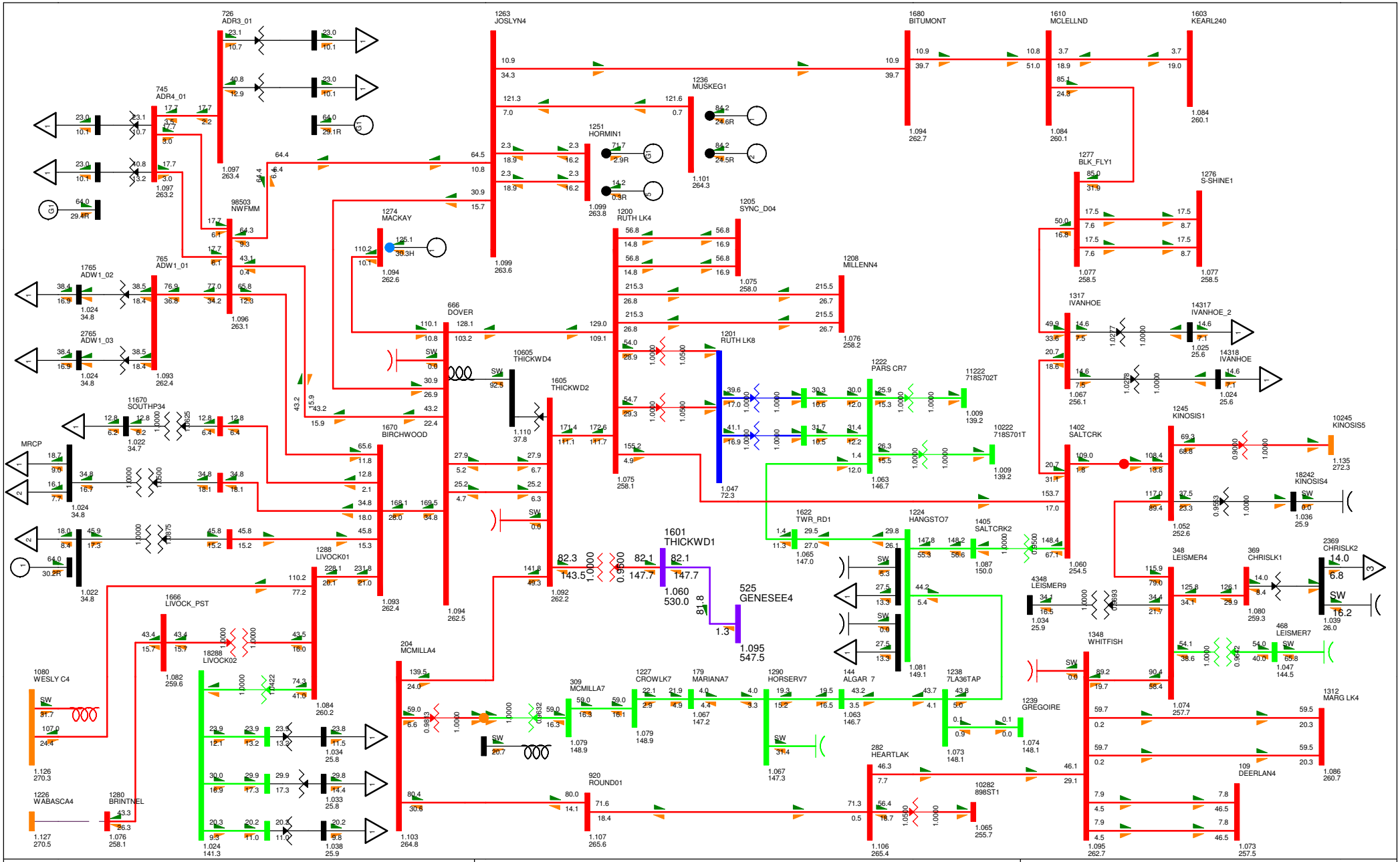

BC - Alberta (IMPORT)-35.7 MW

TASMO MODEL; OUTPUT GENERATED 2010-03-01 14:16:46
SWINGBUS 1520 FOR FC-2009-S-2020-10-31:14:14--1--1-0-0
FRI, AUG 12 2011 16:14

Figure G-2020SP-2

2020 NW FMM STUDY

Bus - VOLTAGE (kV/PU)
Branch - MW/Mvar
Equipment - MW/Mvar

100.0%RATEA
1.120OV 0.950UV
kV: <=34.500 <=69.000 <=138.000 <=240.000 <=500.000 >500.000

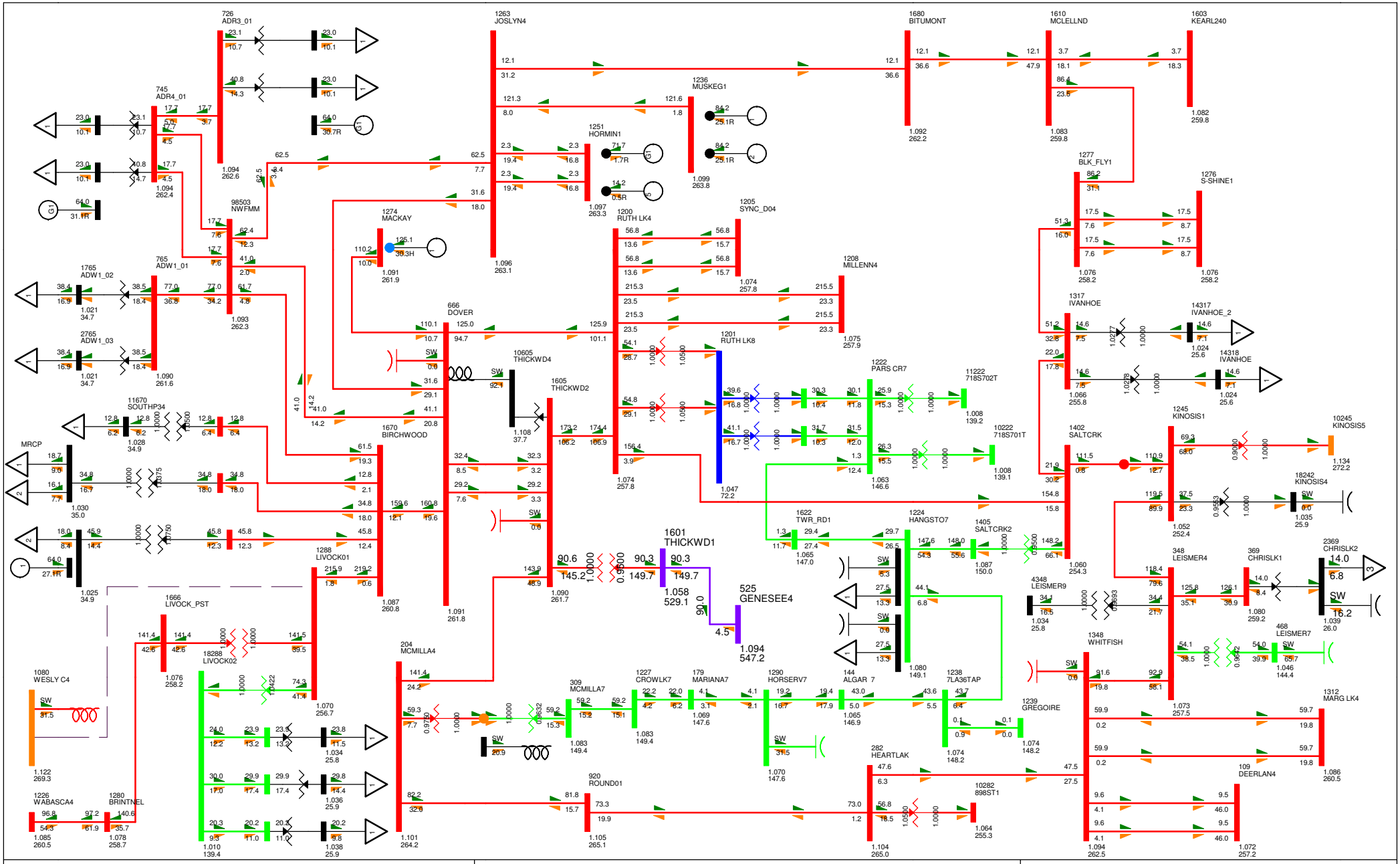

BC - Alberta (IMPORT)-31.4 MW

TASMO MODEL; OUTPUT GENERATED 2010-03-01 14:16:46
SWINGBUS 1520 FOR FC-2009-5-2020-10-31:14:14--1--1-0-0
FRI, AUG 12 2011 16:14

Figure G-2020SP-3

2020 NW FMM STUDY

Bus - VOLTAGE (kV/PU)
Branch - MW/Mvar
Equipment - MW/Mvar

100.0%RATEA
1.120OV 0.950UV
kV: <=34.500 <=69.000 <=138.000 <=240.000 <=500.000 >500.000

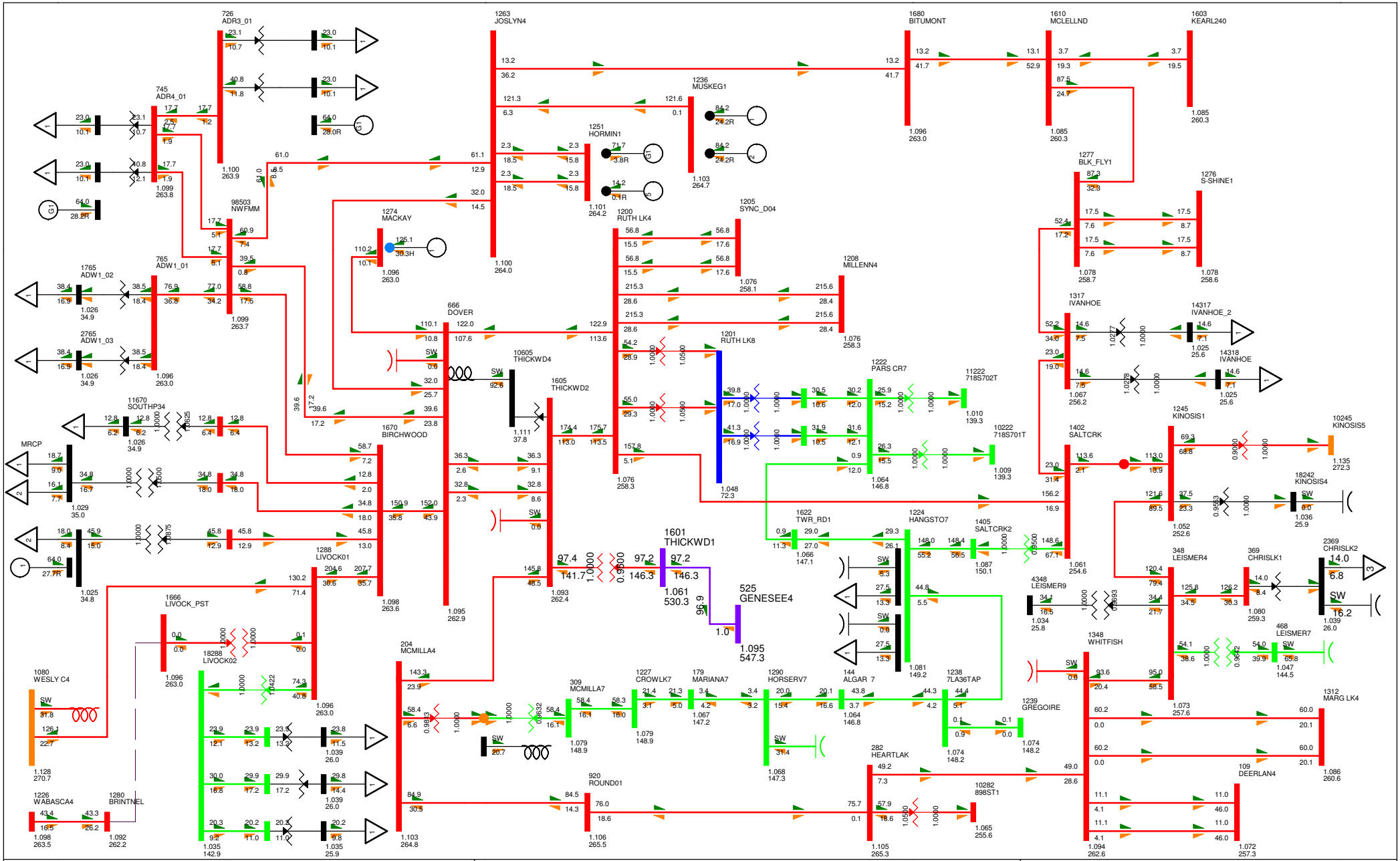
726 ADR3_01
745 ADR4_01
765 ADW1_01
1765 ADW1_02
2765 ADW1_03
98503 NWFMM
1263 JOSLYN4
1680 BITUMONT
1610 MCLELLND
1603 KEARL240
1236 MUSKEG1
1251 HORMIN1
1277 BLK_FLY1
1276 S-SHINE1
1274 MACKAY
1200 RUTH LK4
1205 SYNC_D04
1208 MILLENN4
1317 IVANHOE
14317 IVANHOE_2
14318 IVANHOE
666 DOVER
10605 THICKWD4
1605 THICKWD2
1201 RUTH LK8
1222 PARS CR7
11222 718S702T
10222 718S701T
1402 SALTCRK
1245 KINOSIS1
10245 KINOSIS5
18242 KINOSIS4
11670 SOUTHP34
MRCP
1670 BIRCHWOOD
1288 LIVOCK01
1666 LIVOCK_PST
18288 LIVOCK02
1601 THICKWD1
525 GENESEE4
1622 TWR_RD1
1224 HANGSTO7
1405 SALTCRK2
4348 LEISMER9
348 LEISMER4
369 CHRISLK1
2369 CHRISLK2
468 LEISMER7
1348 WHITFISH
1239 GREGOIRE
1312 MARG LK4
109 DEERLAN4
204 MCMILLA4
309 MCMILLA7
1227 CROWLK7
179 MARIANA7
1290 HORSERV7
144 ALGAR 7
1238 7LA36TAP
282 HEARTLAK
10282 898ST1
920 ROUND01
1080 WESLY C4
1226 WABASCA4
1280 BRINTNEL
BC - Alberta (IMPORT)-34.5 MW
TASMO MODEL; OUTPUT GENERATED 2010-03-01 14:16:46
SWINGBUS 1520 FOR FC-2009-5-2020-10-31:14:14--1--1-0-0
FRI, AUG 12 2011 16:14
Figure G-2020SP-4
2020 NW FMM STUDY
Bus - VOLTAGE (kV/PU)
Branch - MW/Mvar
Equipment - MW/Mvar
100.0%RATEA
1.120OV 0.950UV
kV: <=34.500 <=69.000 <=138.000 <=240.000 <=500.000 >500.000

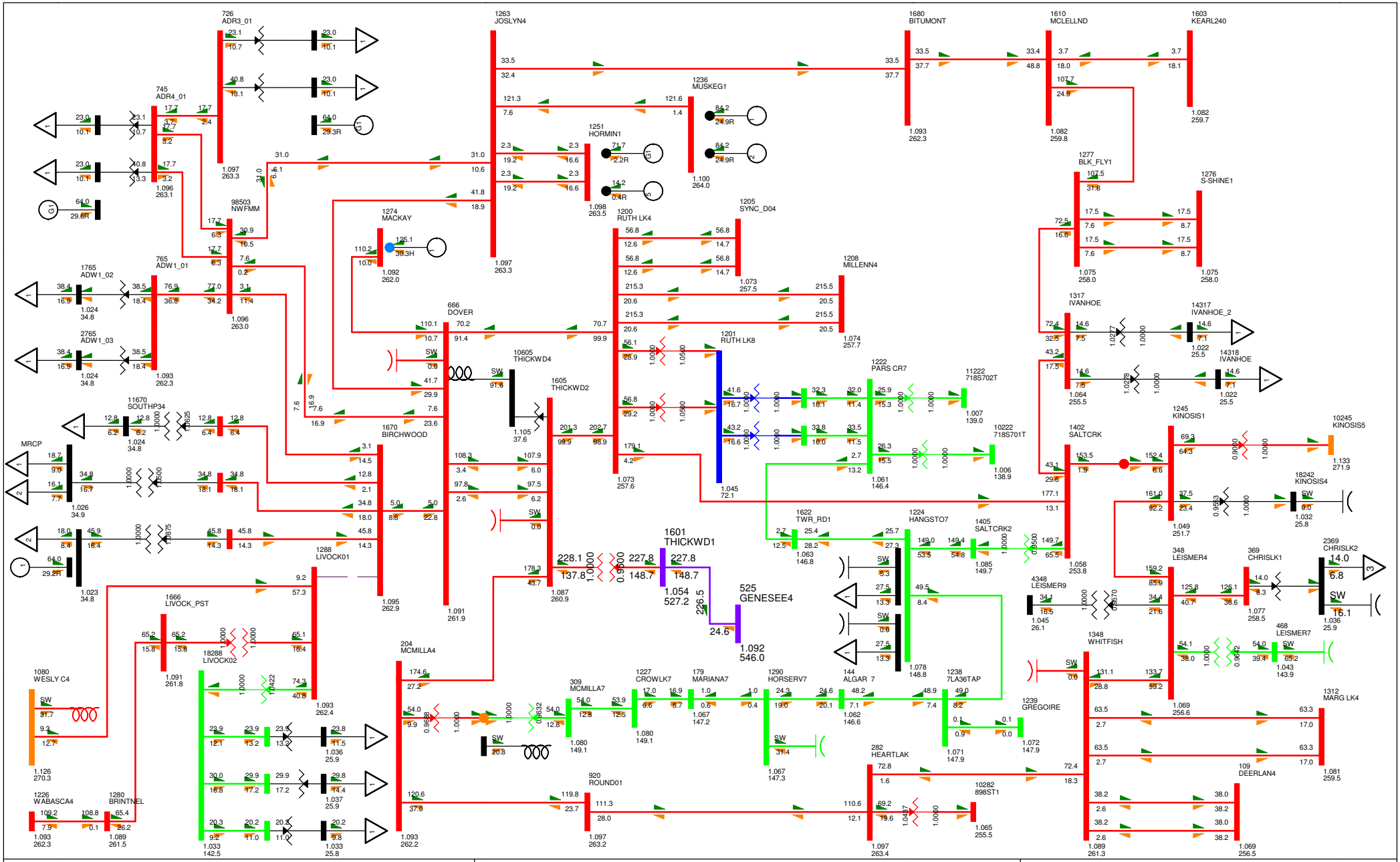

BC - Alberta (IMPORT)-17.8 MW

TASMO MODEL; OUTPUT GENERATED 2010-03-01 14:16:46
SWINGBUS 1520 FOR FC-2009-S-2020-10-31:14:14--1--1-0-0
FRI, AUG 12 2011 16:14

Figure G-2020SP-5

2020 NW FMM STUDY

Bus - VOLTAGE (kV/PU)
Branch - MW/Mvar
Equipment - MW/Mvar

100.0%RATEA
1.120OV 0.950UV
kV: <=34.500 <=69.000 <=138.000 <=240.000 <=500.000 >500.000

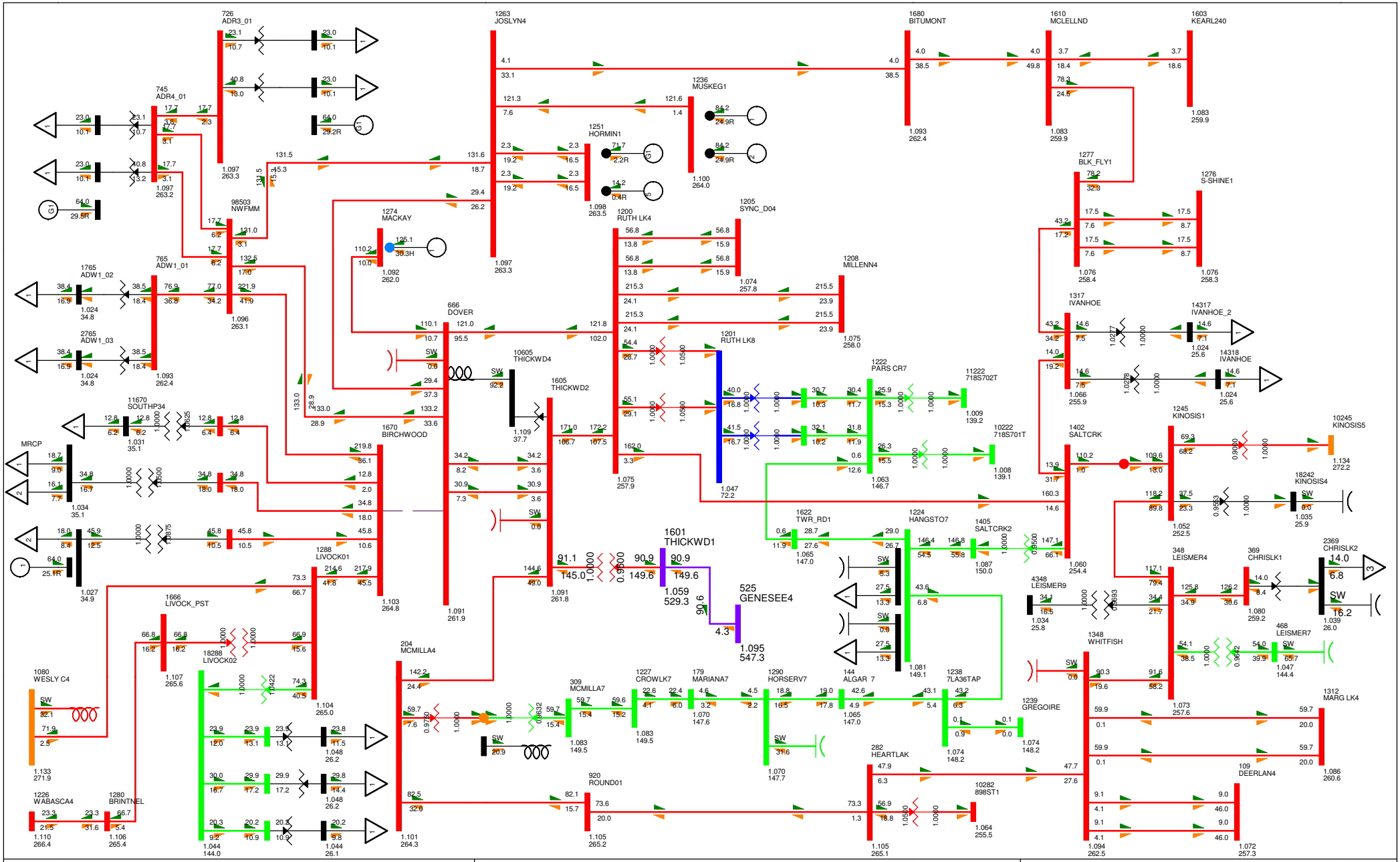

BC - Alberta (IMPORT)-34.7 MW

TASMO MODEL; OUTPUT GENERATED 2010-03-01 14:16:46
SWINGBUS 1520 FOR FC-2009-S-2020-10-31:14:14--1--1-0-0
FRI, AUG 12 2011 16:14

Figure G-2020SP-6

2020 NW FMM STUDY

Bus - VOLTAGE (kV/PU)
Branch - MW/Mvar
Equipment - MW/Mvar

100.0%RATEA
1.120OV 0.950UV
kV: <=34.500 <=69.000 <=138.000 <=240.000 <=500.000 >500.000

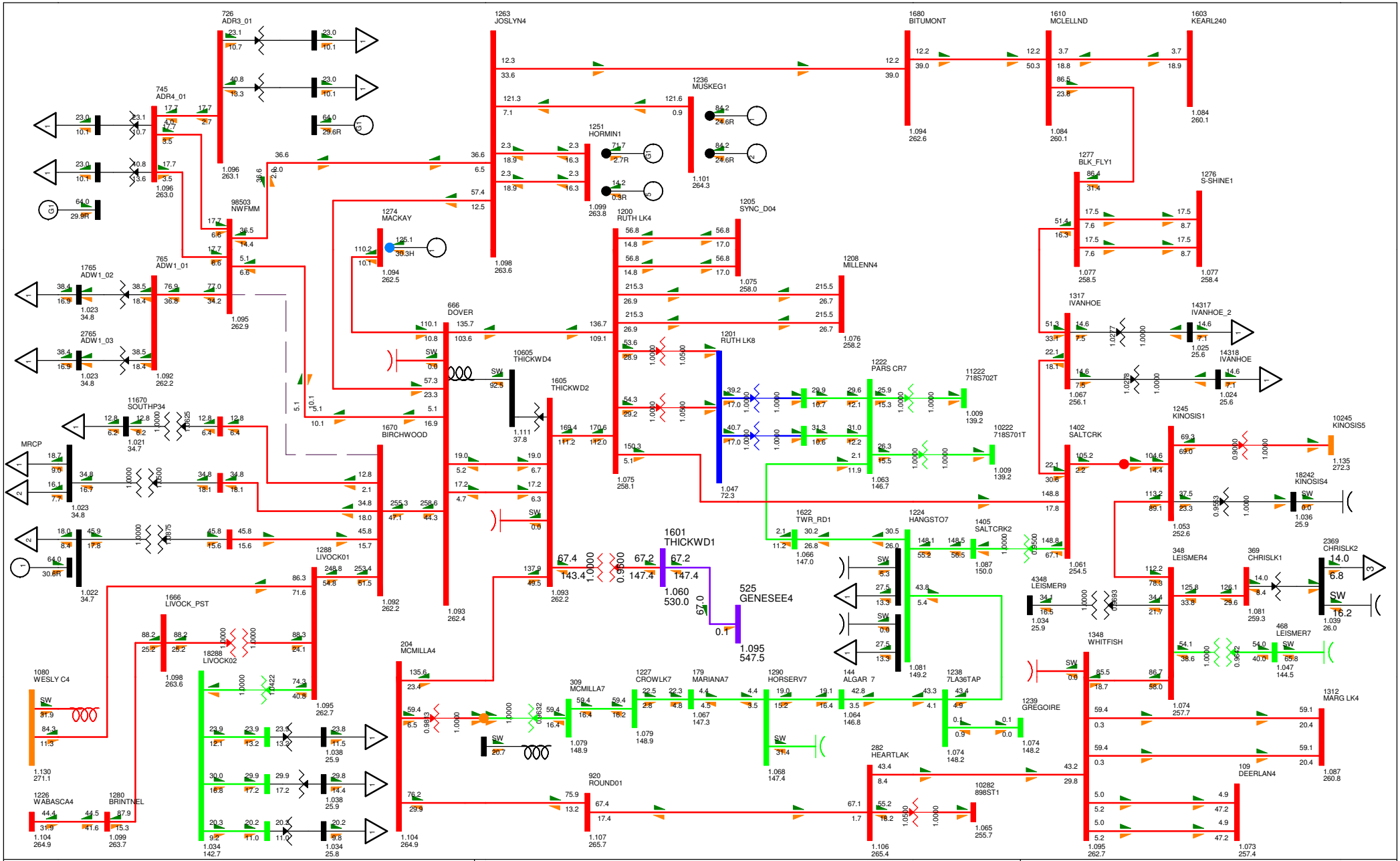
726 ADR3_01
745 ADR4_01
765 ADW1_01
1765 ADW1_02
2765 ADW1_03
98503 NWFMM
1263 JOSLYN4
1680 BITUMONT
1610 MCLELLND
1603 KEARL240
1236 MUSKEG1
1251 HORMIN1
1277 BLK_FLY1
1276 S-SHINE1
1274 MACKAY
1200 RUTH LK4
1205 SYNC_D04
1208 MILLENN4
1201 RUTH LK8
1222 PARS CR7
11222 718S702T
10222 718S701T
1317 IVANHOE
14317 IVANHOE_2
14318 IVANHOE
666 DOVER
10605 THICKWD4
1605 THICKWD2
1601 THICKWD1
525 GENESEE4
1670 BIRCHWOOD
11670 SOUTHP34
MRCP
1288 LIVOCK01
1666 LIVOCK_PST
18288 LIVOCK02
1622 TWR_RD1
1224 HANGSTO7
1405 SALTCRK2
1402 SALTCRK
1245 KINOSIS1
10245 KINOSIS5
18242 KINOSIS4
348 LEISMER4
4348 LEISMER9
369 CHRISLK1
2369 CHRISLK2
468 LEISMER7
1348 WHITFISH
1239 GREGOIRE
1312 MARG LK4
109 DEERLAN4
204 MCMILLA4
309 MCMILLA7
1227 CROWLK7
179 MARIANA7
1290 HORSERV7
144 ALGAR 7
1238 7LA36TAP
282 HEARTLAK
920 ROUND01
10282 898ST1
1080 WESLY C4
1226 WABASCA4
1280 BRINTNEL
BC - Alberta (IMPORT)-34.7 MW
TASMO MODEL; OUTPUT GENERATED 2010-03-01 14:16:46
SWINGBUS 1520 FOR FC-2009-S-2020-10-31:14:14--1--1-0-0
FRI, AUG 12 2011 16:14
Figure G-2020SP-7
2020 NW FMM STUDY
Bus - VOLTAGE (kV/PU)
Branch - MW/Mvar
Equipment - MW/Mvar
100.0%RATEA
1.120OV 0.950UV
kV: <=34.500 <=69.000 <=138.000 <=240.000 <=500.000 >500.000

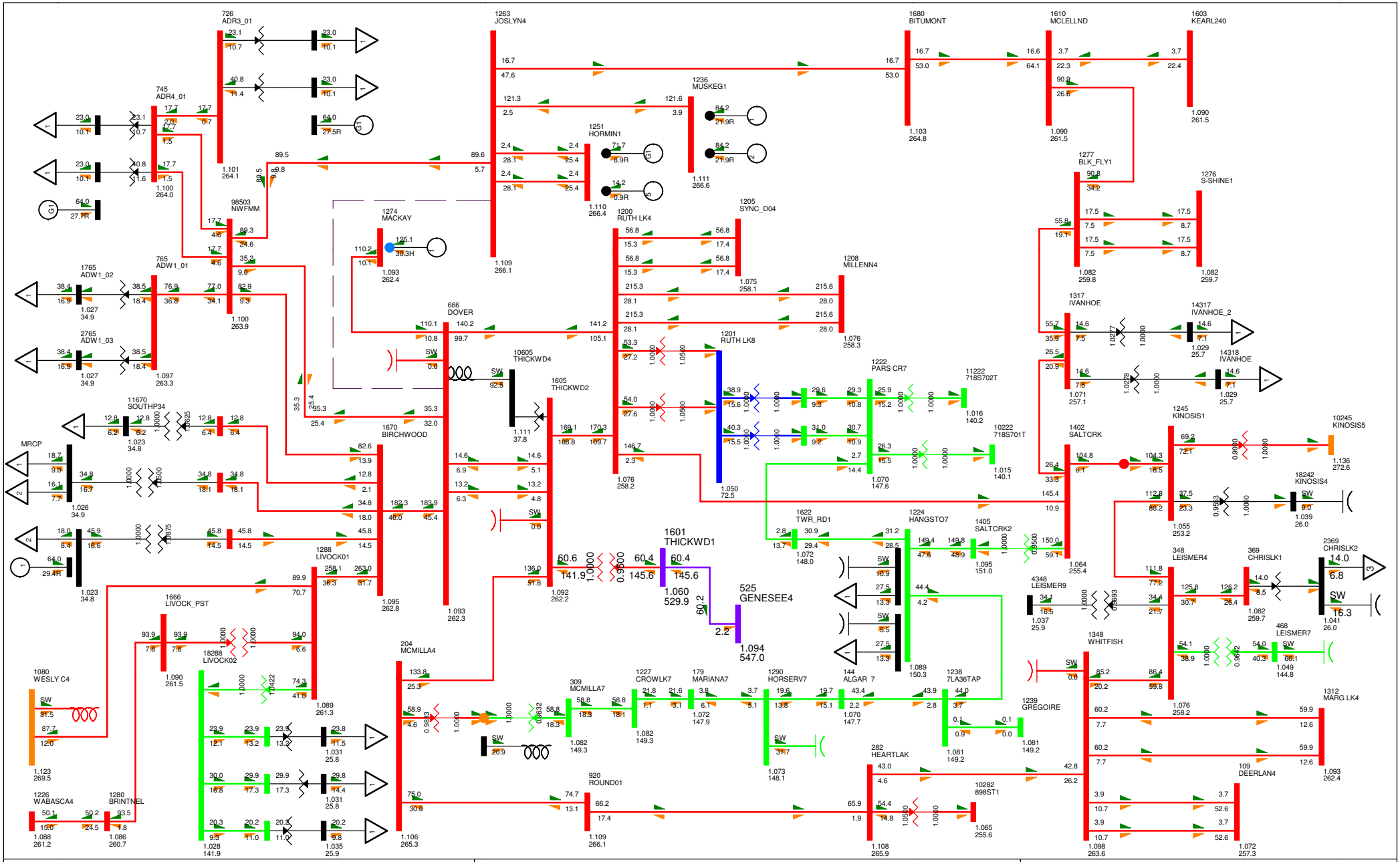

BC - Alberta (IMPORT)-33.7 MW

TASMO MODEL; OUTPUT GENERATED 2010-03-01 14:16:46
SWINGBUS 1520 FOR FC-2009-S-2020-10-31:14:14--1--1-0-0
FRI, AUG 12 2011 16:14

Figure G-2020SP-8

2020 NW FMM STUDY

Bus - VOLTAGE (kV/PU)
Branch - MW/Mvar
Equipment - MW/Mvar

100.0%RATEA
1.120OV 0.950UV
kV: <=34.500 <=69.000 <=138.000 <=240.000 <=500.000 >500.000

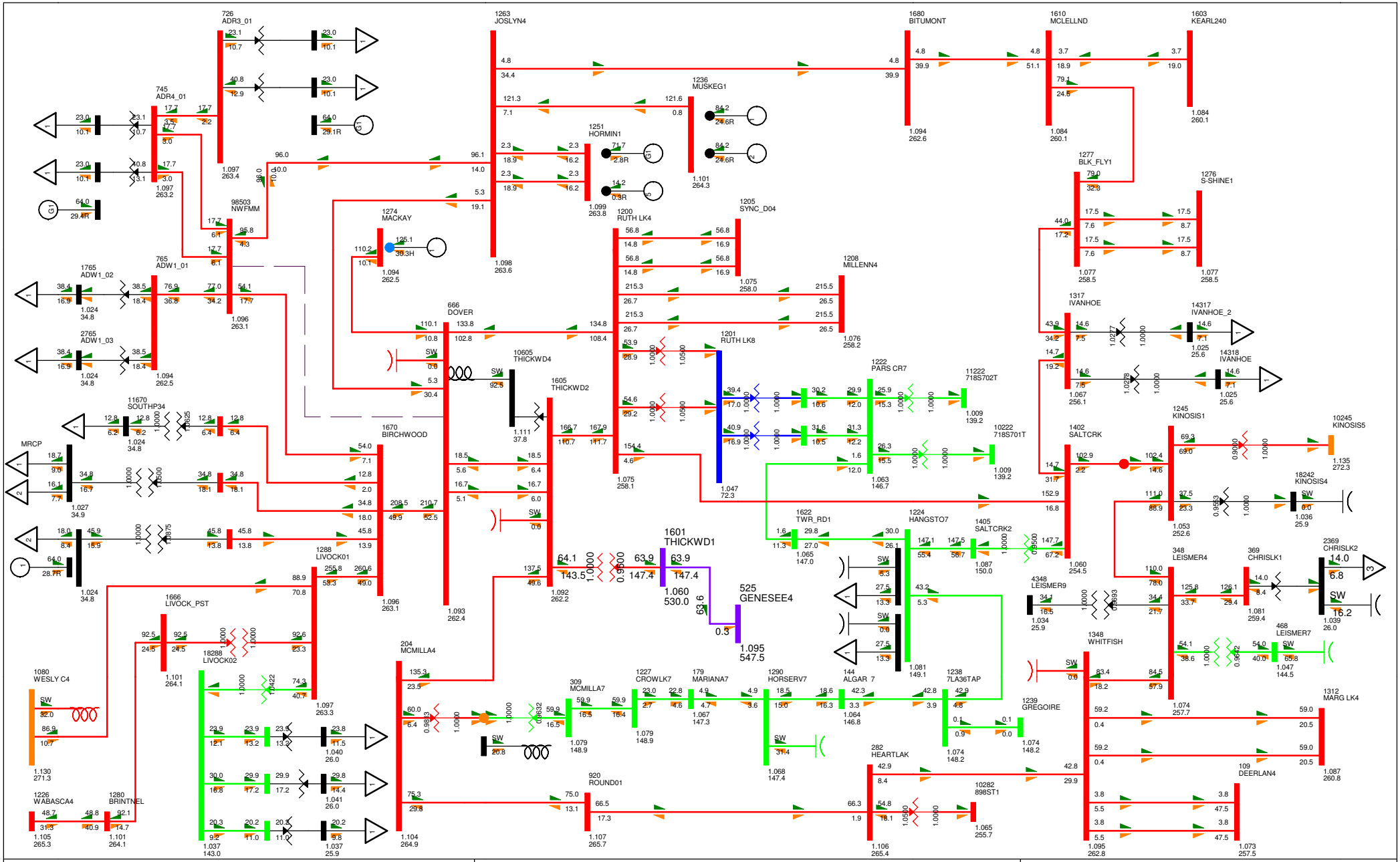

BC - Alberta (IMPORT)-35.4 MW

TASMO MODEL; OUTPUT GENERATED 2010-03-01 14:16:46
SWINGBUS 1520 FOR FC-2009-S-2020-10-31:14:14--1--1-0-0
FRI, AUG 12 2011 16:14

Figure G-2020SP-9

2020 NW FMM STUDY

Bus - VOLTAGE (kV/PU)
Branch - MW/Mvar
Equipment - MW/Mvar

100.0%RATEA
1.120OV 0.950UV
kV: <=34.500 <=69.000 <=138.000 <=240.000 <=500.000 >500.000

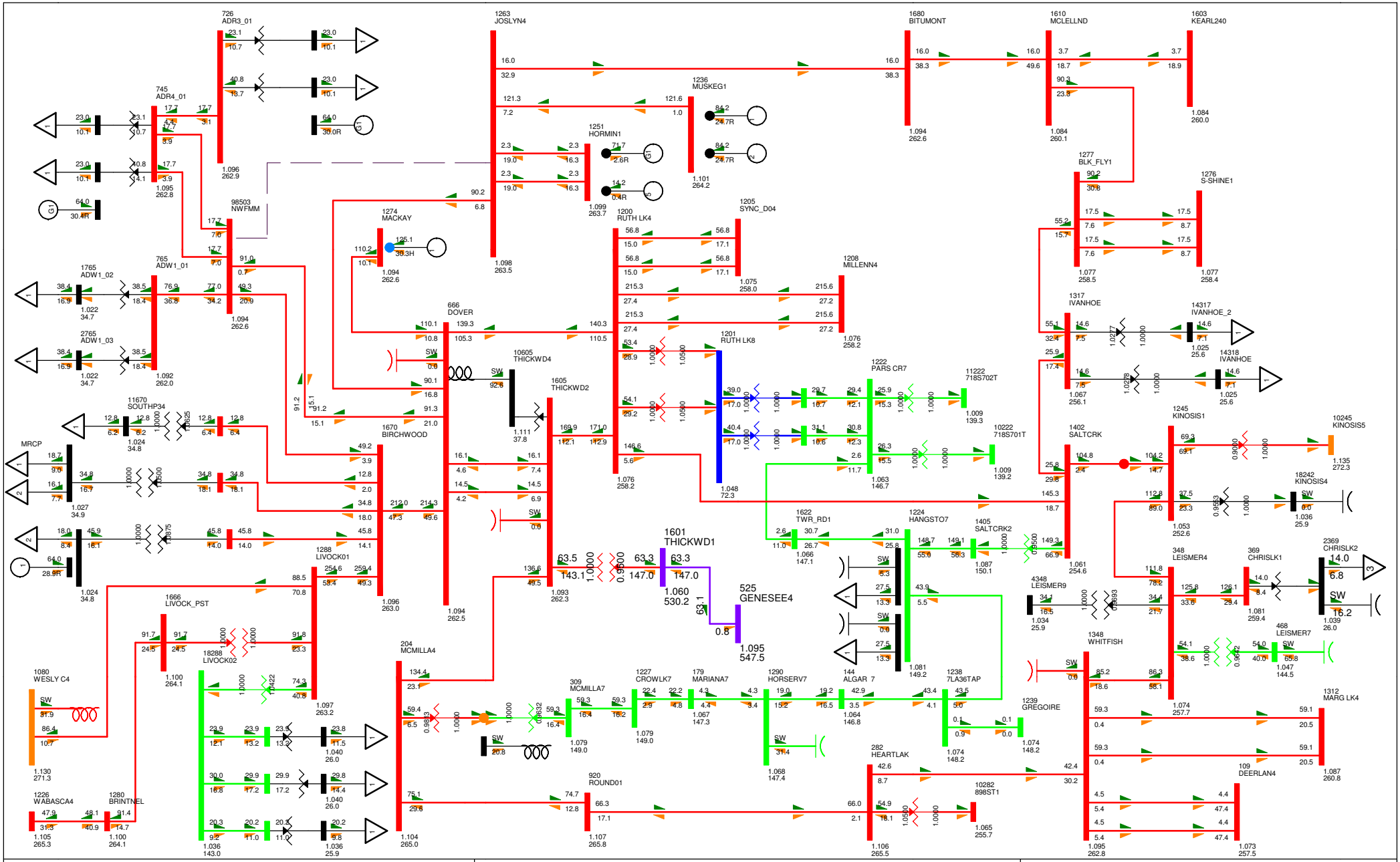

BC - Alberta (IMPORT)-35.2 MW

TASMO MODEL; OUTPUT GENERATED 2010-03-01 14:16:46
SWINGBUS 1520 FOR FC-2009-S-2020-10-31:14:14--1--1-0-0
FRI, AUG 12 2011 16:15

Figure G-2020SP-10

2020 NW FMM STUDY

Bus - VOLTAGE (kV/PU)
Branch - MW/Mvar
Equipment - MW/Mvar

100.0%RATEA
1.120OV 0.950UV
kV: <=34.500 <=69.000 <=138.000 <=240.000 <=500.000 >500.000

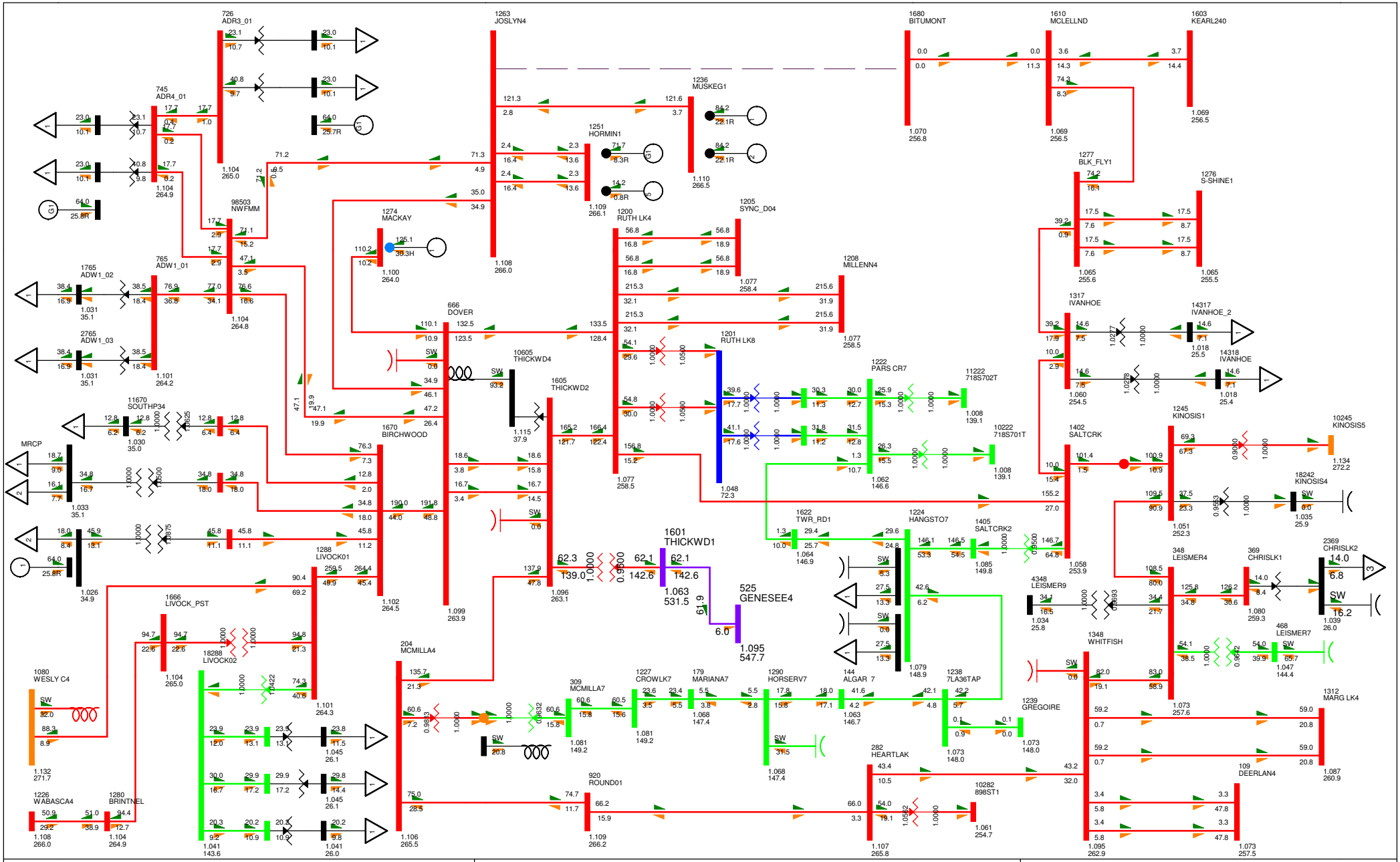
726 ADR3_01
1263 JOSLYN4
1680 BITUMONT
1610 MCLELLND
1603 KEARL240
745 ADR4_01
1236 MUSKEG1
1251 HORMIN1
1277 BLK_FLY1
1276 S-SHINE1
98503 NWFMM
1274 MACKAY
1200 RUTH LK4
1205 SYNC_D04
1765 ADW1_02
765 ADW1_01
1208 MILLENN4
1317 IVANHOE
14317 IVANHOE_2
14318 IVANHOE
2765 ADW1_03
666 DOVER
1201 RUTH LK8
1222 PARS CR7
11222 718S702T
10222 718S701T
10605 THICKWD4
1605 THICKWD2
11670 SOUTHP34
1670 BIRCHWOOD
1402 SALTCRK
1245 KINOSIS1
10245 KINOSIS5
18242 KINOSIS4
MRCP
1622 TWR_RD1
1224 HANGSTO7
1405 SALTCRK2
1601 THICKWD1
525 GENESEE4
348 LEISMER4
369 CHRISLK1
2369 CHRISLK2
4348 LEISMER9
468 LEISMER7
1348 WHITFISH
1080 WESLY C4
1666 LIVOCK_PST
1288 LIVOCK01
18288 LIVOCK02
204 MCMILLA4
309 MCMILLA7
1227 CROWLK7
179 MARIANA7
1290 HORSERV7
144 ALGAR 7
1238 7LA36TAP
1239 GREGOIRE
1312 MARG LK4
109 DEERLAN4
282 HEARTLAK
920 ROUND01
10282 898ST1
1226 WABASCA4
1280 BRINTNEL
BC - Alberta (IMPORT)-35.7 MW
TASMO MODEL; OUTPUT GENERATED 2010-03-01 14:16:46
SWINGBUS 1520 FOR FC-2009-5-2020-10-31:14:14--1--1-0-0
FRI, AUG 12 2011 16:15
Figure G-2020SP-11
2020 NW FMM STUDY
Bus - VOLTAGE (kV/PU)
Branch - MW/Mvar
Equipment - MW/Mvar
100.0%RATEA
1.120OV 0.950UV
kV: <=34.500 <=69.000 <=138.000 <=240.000 <=500.000 >500.000

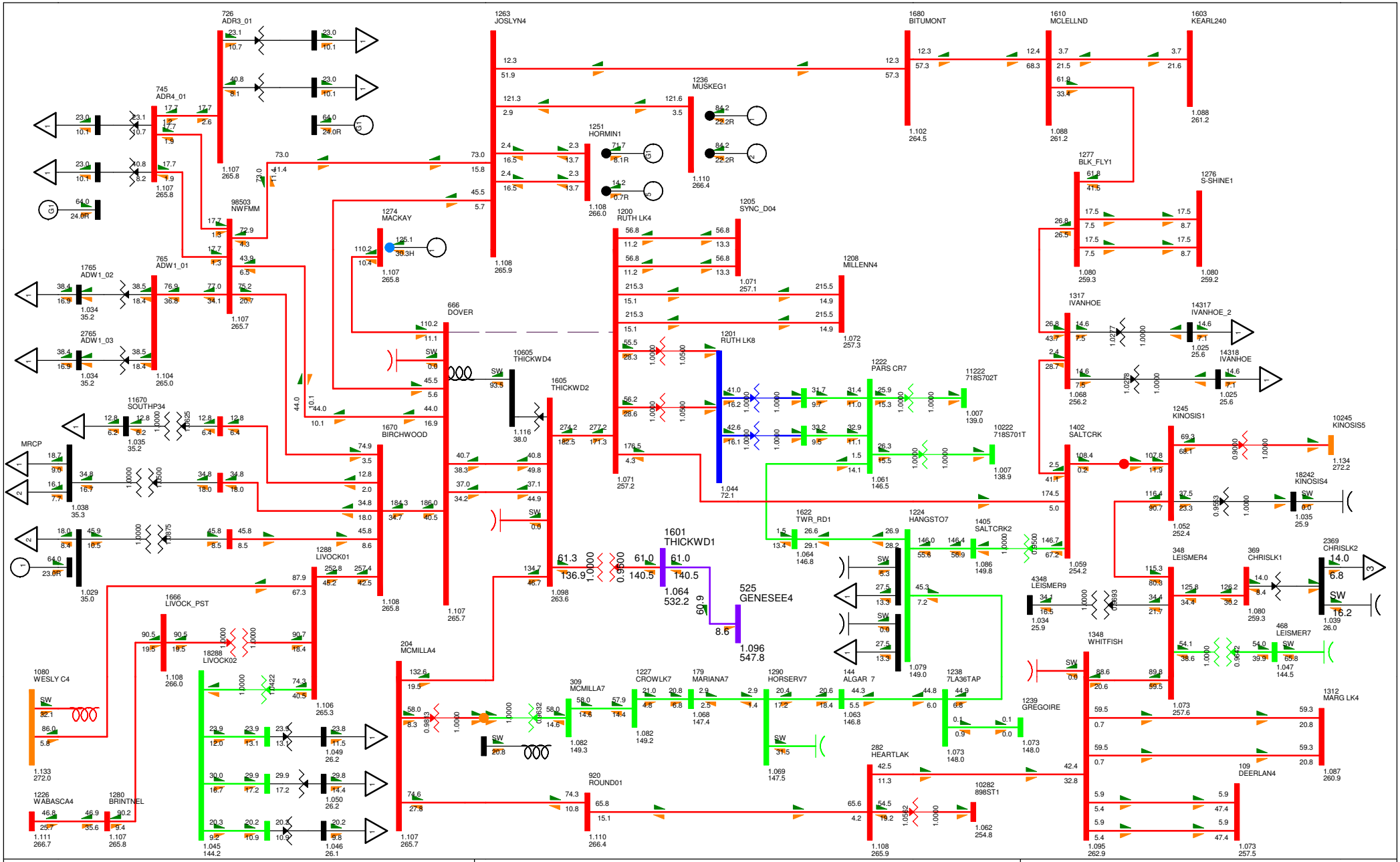
726 ADR3_01
745 ADR4_01
765 ADW1_01
1765 ADW1_02
2765 ADW1_03
98503 NWFMM
1263 JOSLYN4
1680 BITUMONT
1610 MCLELLND
1603 KEARL240
1236 MUSKEG1
1251 HORMIN1
1277 BLK_FLY1
1276 S-SHINE1
1274 MACKAY
1200 RUTH LK4
1205 SYNC_D04
1208 MILLENN4
1317 IVANHOE
14317 IVANHOE_2
14318 IVANHOE
666 DOVER
10605 THICKWD4
1605 THICKWD2
1201 RUTH LK8
1222 PARS CR7
11222 718S702T
10222 718S701T
11670 SOUTHP34
MRCP
1670 BIRCHWOOD
1402 SALTCRK
1245 KINOSIS1
10245 KINOSIS5
18242 KINOSIS4
1622 TWR_RD1
1224 HANGSTO7
1405 SALTCRK2
1601 THICKWD1
525 GENESEE4
348 LEISMER4
369 CHRISLK1
2369 CHRISLK2
4348 LEISMER9
468 LEISMER7
1348 WHITFISH
1239 GREGOIRE
1312 MARG LK4
109 DEERLAN4
1288 LIVOCK01
1666 LIVOCK_PST
18288 LIVOCK02
1080 WESLY C4
1226 WABASCA4
1280 BRINTNEL
204 MCMILLA4
309 MCMILLA7
920 ROUND01
1227 CROWLK7
179 MARIANA7
1290 HORSERV7
144 ALGAR 7
1238 7LA36TAP
282 HEARTLAK
10282 898ST1
BC - Alberta (IMPORT)-34.5 MW
TASMO MODEL; OUTPUT GENERATED 2010-03-01 14:16:46
SWINGBUS 1520 FOR FC-2009-5-2020-10-31:14:14--1--1-0-0
FRI, AUG 12 2011 16:15
Figure G-2020SP-12
2020 NW FMM STUDY
Bus - VOLTAGE (kV/PU)
Branch - MW/Mvar
Equipment - MW/Mvar
100.0%RATEA
1.120OV 0.950UV
kV: <=34.500 <=69.000 <=138.000 <=240.000 <=500.000 >500.000

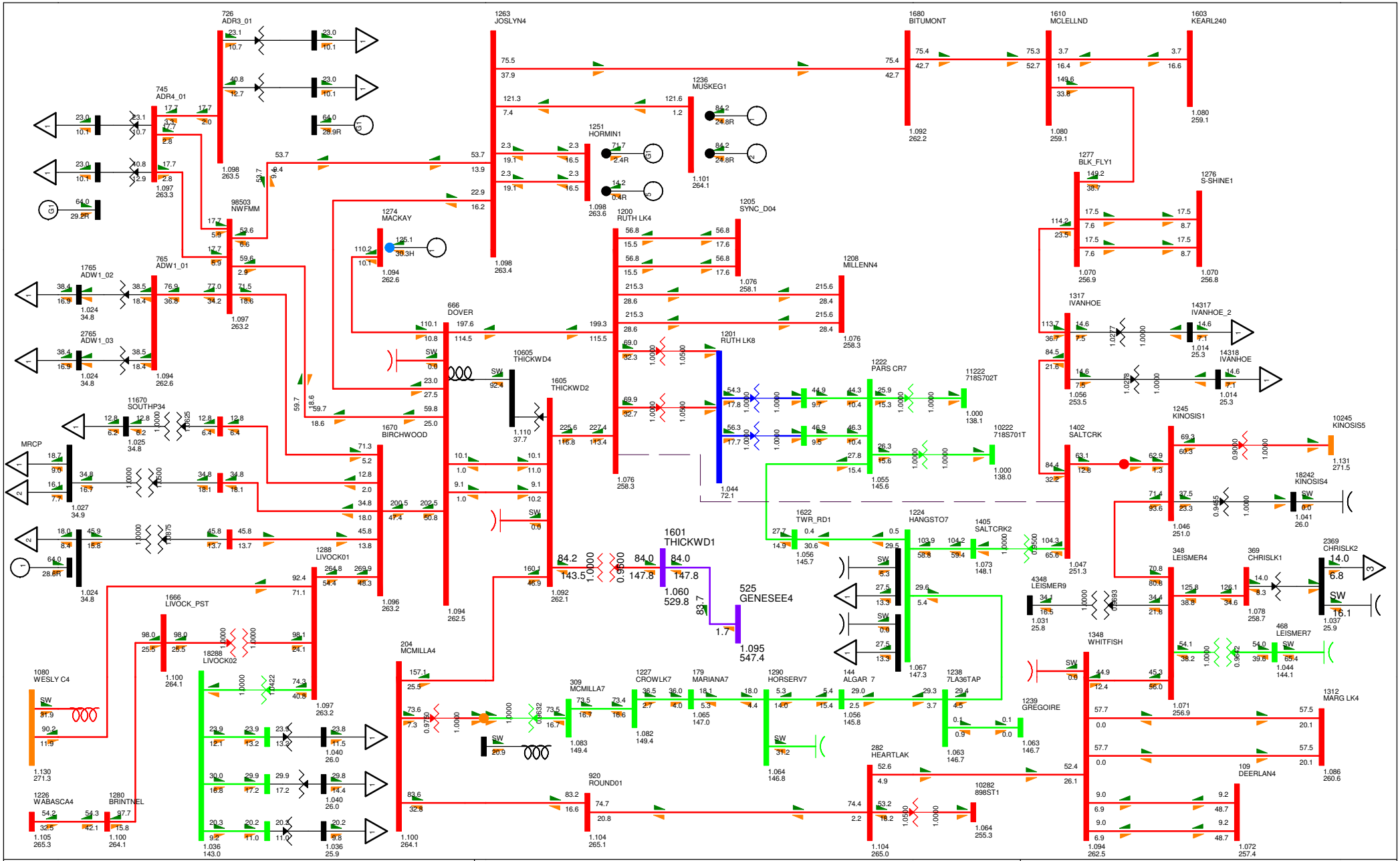

BC - Alberta (IMPORT)-34.0 MW

TASMO MODEL; OUTPUT GENERATED 2010-03-01 14:16:46
SWINGBUS 1520 FOR FC-2009-S-2020-10-31:14:14--1--1-0-0
FRI, AUG 12 2011 16:15

Figure G-2020SP-13

2020 NW FMM STUDY

Bus - VOLTAGE (kV/PU)
Branch - MW/Mvar
Equipment - MW/Mvar

100.0%RATEA
1.120OV 0.950UV
kV: <=34.500 <=69.000 <=138.000 <=240.000 <=500.000 >500.000

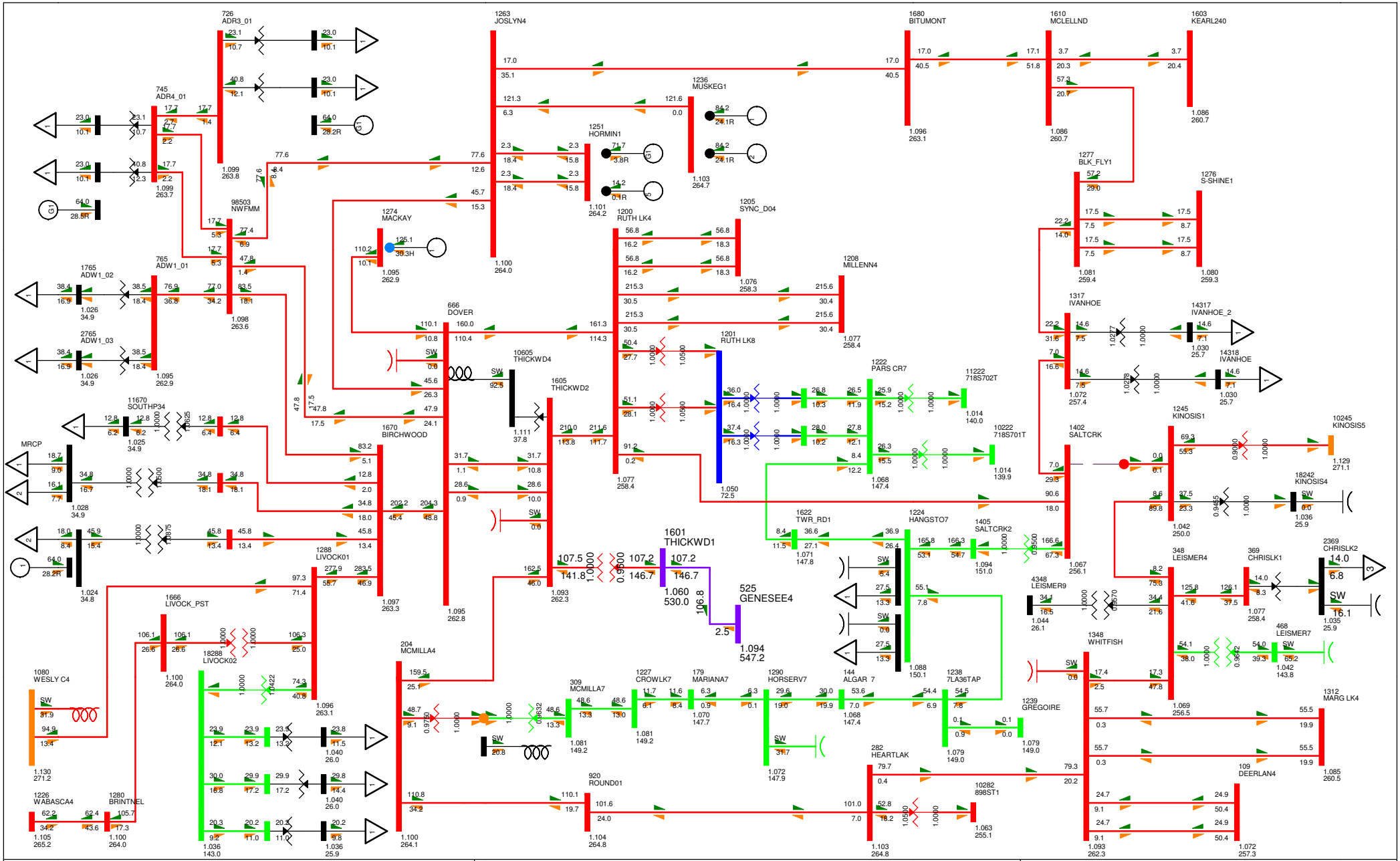

BC - Alberta (IMPORT)-33.8 MW

TASMO MODEL; OUTPUT GENERATED 2010-03-01 14:16:46
SWINGBUS 1520 FOR FC-2009-S-2020-10-31:14:14--1--1-0-0
FRI, AUG 12 2011 16:15

Figure G-2020SP-14

2020 NW FMM STUDY

Bus - VOLTAGE (kV/PU)
Branch - MW/Mvar
Equipment - MW/Mvar

100.0%RATEA
1.120OV 0.950UV
kV: <=34.500 <=69.000 <=138.000 <=240.000 <=500.000 >500.000

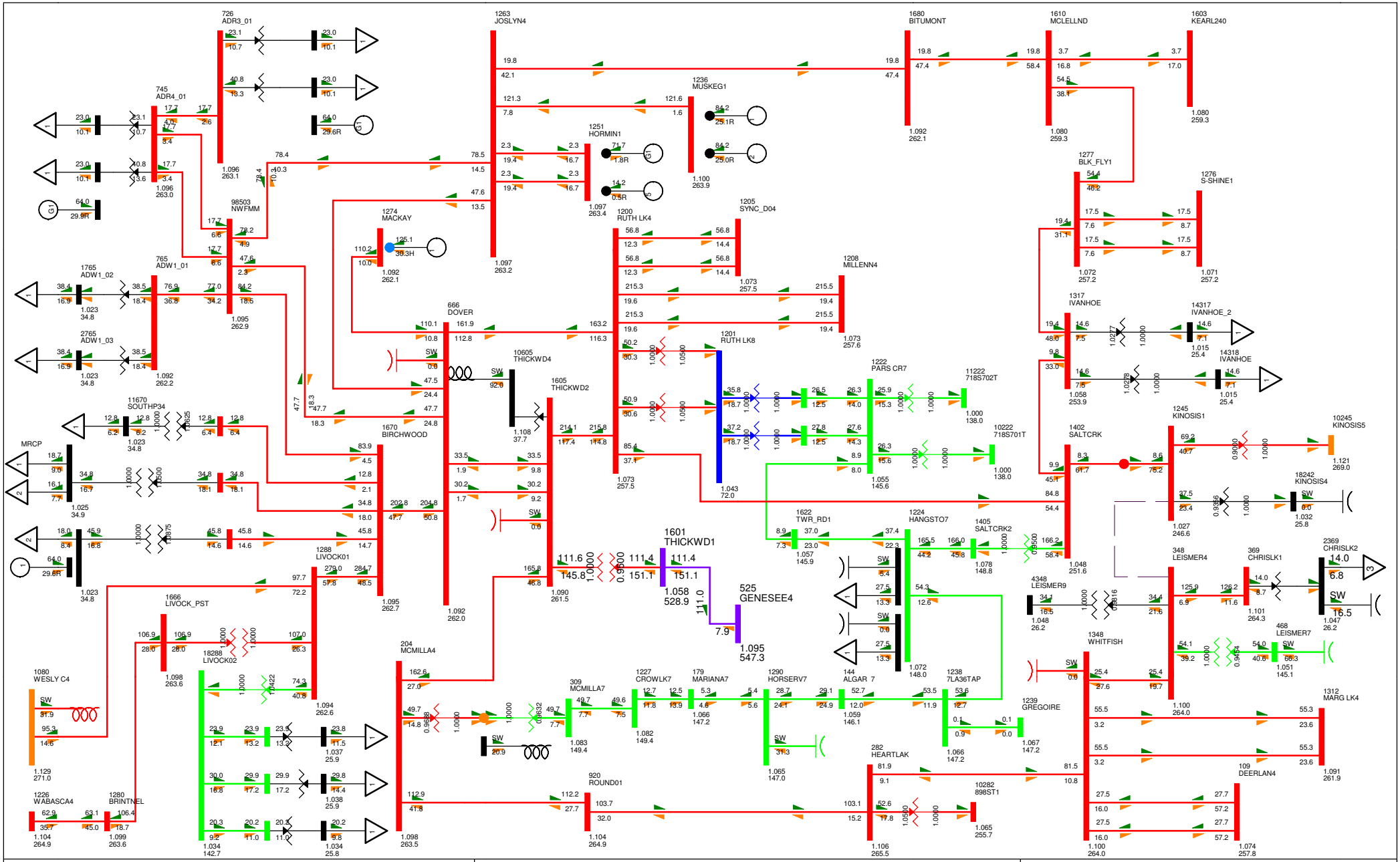

BC - Alberta (IMPORT)-33.0 MW

TASMO MODEL; OUTPUT GENERATED 2010-03-01 14:16:46
SWINGBUS 1520 FOR FC-2009-S-2020-10-31:14:14--1--1-0-0
FRI, AUG 12 2011 16:15

Figure G-2020SP-15

2020 NW FMM STUDY

Bus - VOLTAGE (kV/PU)
Branch - MW/Mvar
Equipment - MW/Mvar

100.0%RATEA
1.120OV 0.950UV
kV: <=34.500 <=69.000 <=138.000 <=240.000 <=500.000 >500.000

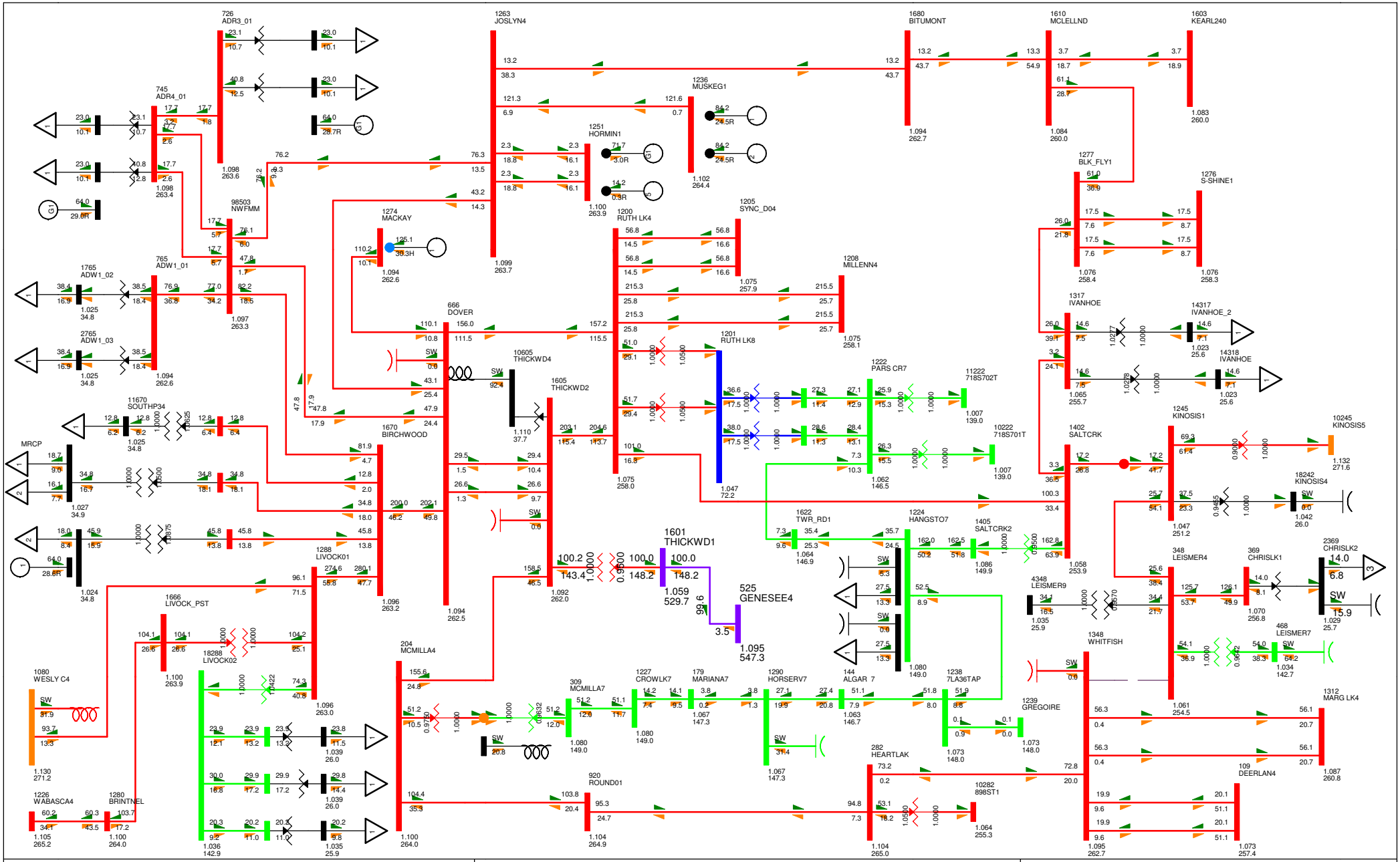
726 ADR3_01
745 ADR4_01
1263 JOSLYN4
1680 BITUMONT
1610 MCLELLND
1603 KEARL240
1236 MUSKEG1
1251 HORMIN1
1277 BLK_FLY1
1276 S-SHINE1
98503 NWFMM
1274 MACKAY
1200 RUTH LK4
1205 SYNC_D04
1765 ADW1_02
765 ADW1_01
2765 ADW1_03
1208 MILLENN4
1317 IVANHOE
14317 IVANHOE_2
14318 IVANHOE
666 DOVER
1201 RUTH LK8
1222 PARS CR7
11222 718S702T
10222 718S701T
10605 THICKWD4
1605 THICKWD2
11670 SOUTHP34
1670 BIRCHWOOD
MRCP
1402 SALTCRK
1245 KINOSIS1
10245 KINOSIS5
18242 KINOSIS4
1601 THICKWD1
525 GENESEE4
1622 TWR_RD1
1224 HANGSTO7
1405 SALTCRK2
348 LEISMER4
369 CHRISLK1
2369 CHRISLK2
4348 LEISMER9
468 LEISMER7
1348 WHITFISH
1239 GREGOIRE
1312 MARG LK4
109 DEERLAN4
1666 LIVOCK_PST
1288 LIVOCK01
18288 LIVOCK02
204 MCMILLA4
309 MCMILLA7
1227 CROWLK7
179 MARIANA7
1290 HORSERV7
144 ALGAR 7
1238 7LA36TAP
282 HEARTLAK
920 ROUND01
10282 898ST1
1080 WESLY C4
1226 WABASCA4
1280 BRINTNEL
BC - Alberta (IMPORT)-34.6 MW
TASMO MODEL; OUTPUT GENERATED 2010-03-01 14:16:46
SWINGBUS 1520 FOR FC-2009-5-2020-10-31:14:14--1--1-0-0
FRI, AUG 12 2011 16:15
Figure G-2020SP-16
2020 NW FMM STUDY
Bus - VOLTAGE (kV/PU)
Branch - MW/Mvar
Equipment - MW/Mvar
100.0%RATEA
1.120OV 0.950UV
kV: <=34.500 <=69.000 <=138.000 <=240.000 <=500.000 >500.000

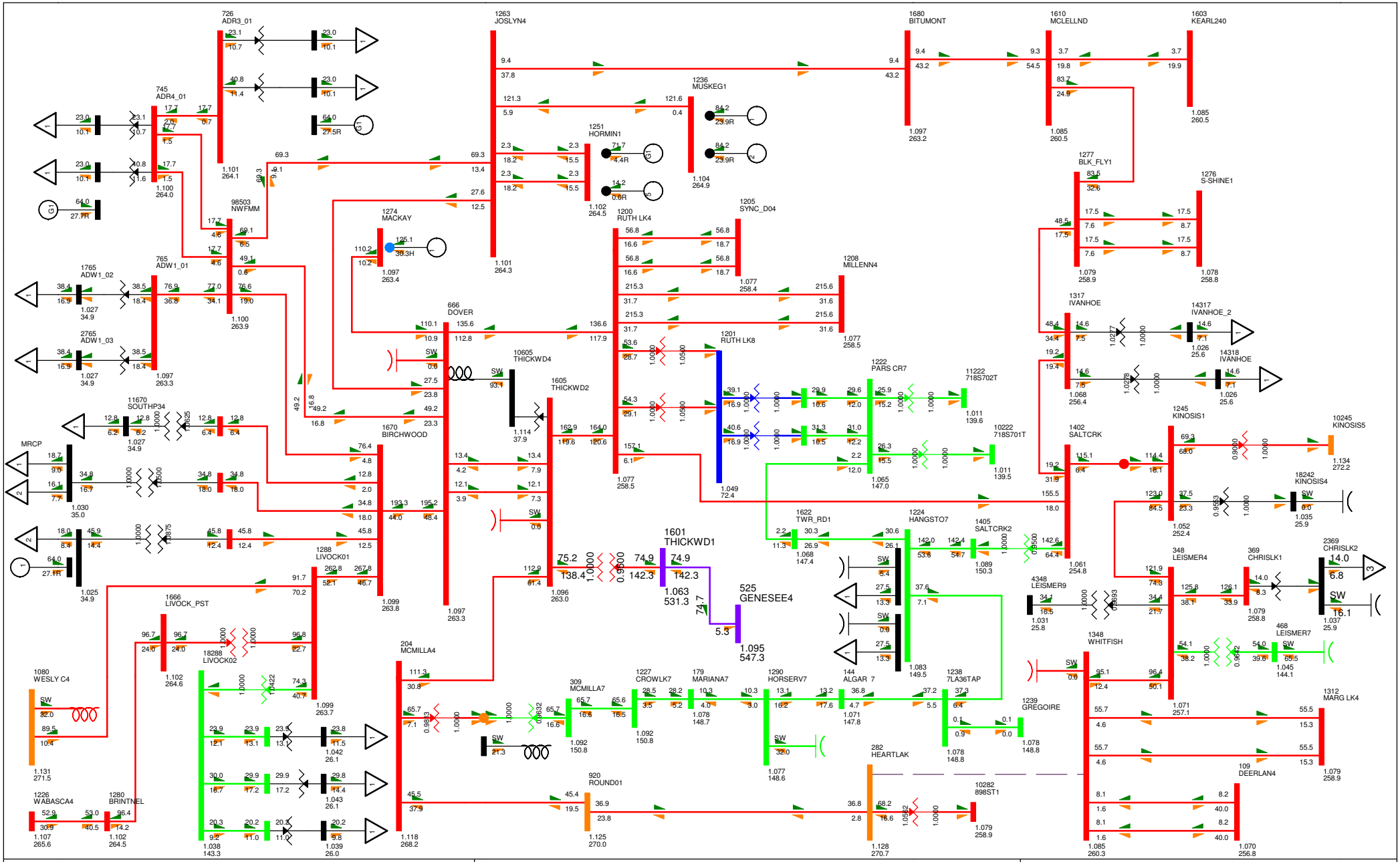

BC - Alberta (IMPORT)-35.2 MW

TASMO MODEL; OUTPUT GENERATED 2010-03-01 14:16:46
SWINGBUS 1520 FOR FC-2009-S-2020-10-31:14:14--1--1-0-0
FRI, AUG 12 2011 16:15

Figure G-2020SP-17

2020 NW FMM STUDY

Bus - VOLTAGE (kV/PU)
Branch - MW/Mvar
Equipment - MW/Mvar

100.0%RATEA
1.120OV 0.950UV
kV: <=34.500 <=69.000 <=138.000 <=240.000 <=500.000 >500.000

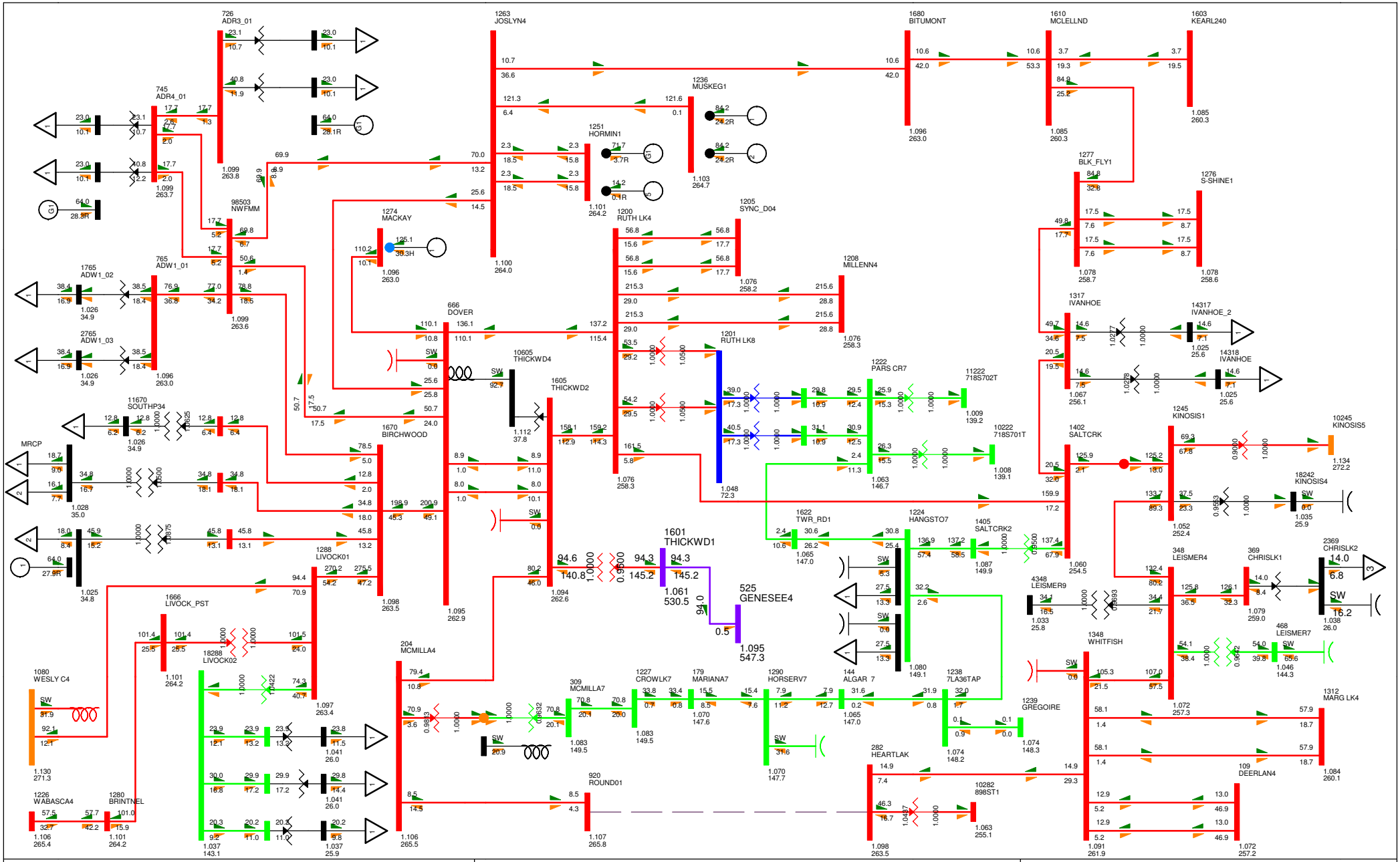

BC - Alberta (IMPORT)-35.7 MW

TASMO MODEL; OUTPUT GENERATED 2010-03-01 14:16:46
SWINGBUS 1520 FOR FC-2009-5-2020-10-31:14:14--1--1-0-0
FRI, AUG 12 2011 16:15

Figure G-2020SP-18

2020 NW FMM STUDY

Bus - VOLTAGE (kV/PU)
Branch - MW/Mvar
Equipment - MW/Mvar

100.0%RATEA
1.120OV 0.950UV
kV: <=34.500 <=69.000 <=138.000 <=240.000 <=500.000 >500.000

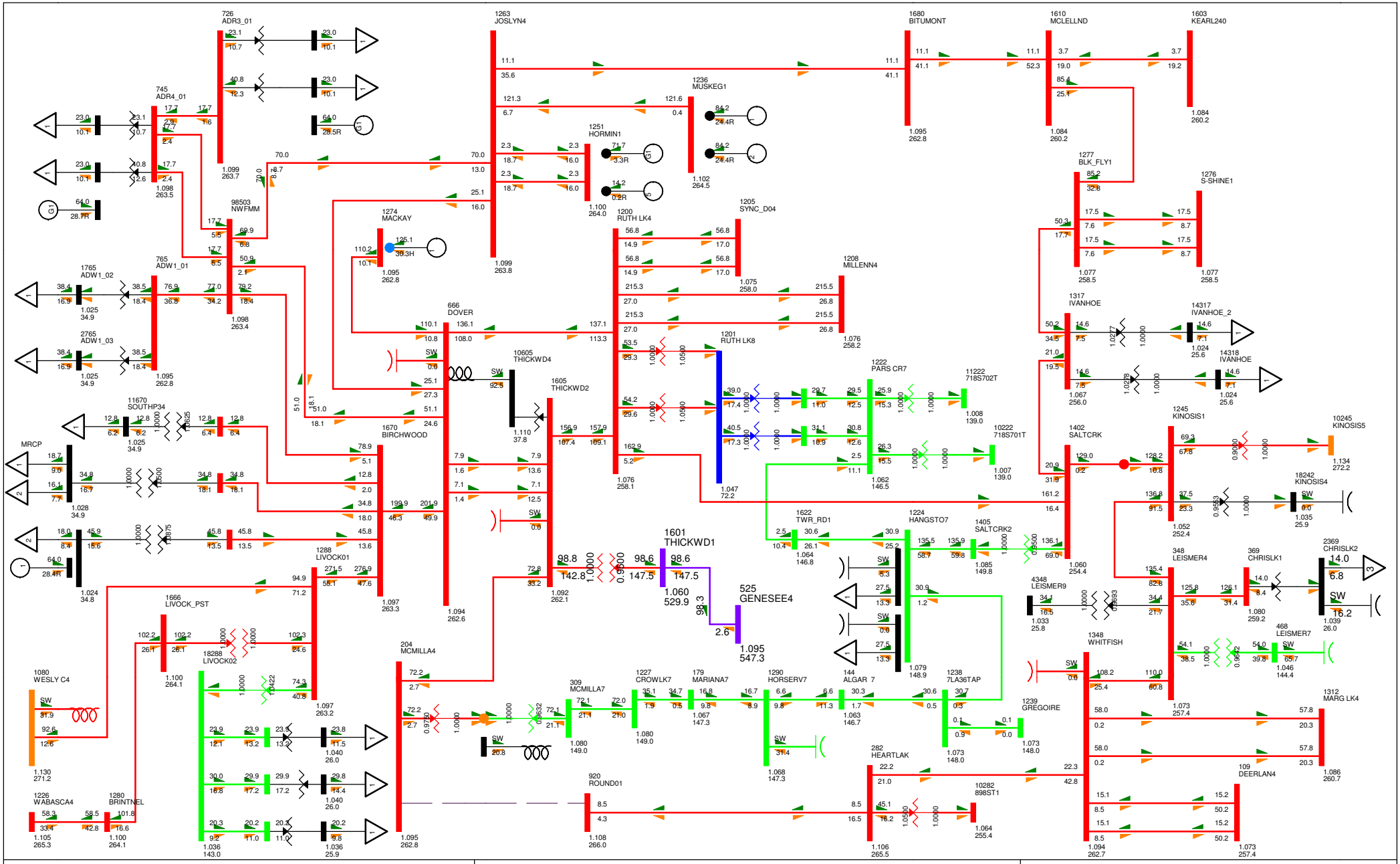

BC - Alberta (IMPORT)-35.5 MW

TASMO MODEL; OUTPUT GENERATED 2010-03-01 14:16:46
SWINGBUS 1520 FOR FC-2009-S-2020-10-31:14:14--1--1-0-0
FRI, AUG 12 2011 16:15

Figure G-2020SP-19

2020 NW FMM STUDY

Bus - VOLTAGE (kV/PU)
Branch - MW/Mvar
Equipment - MW/Mvar

100.0%RATEA
1.120OV 0.950UV
kV: <=34.500 <=69.000 <=138.000 <=240.000 <=500.000 >500.000

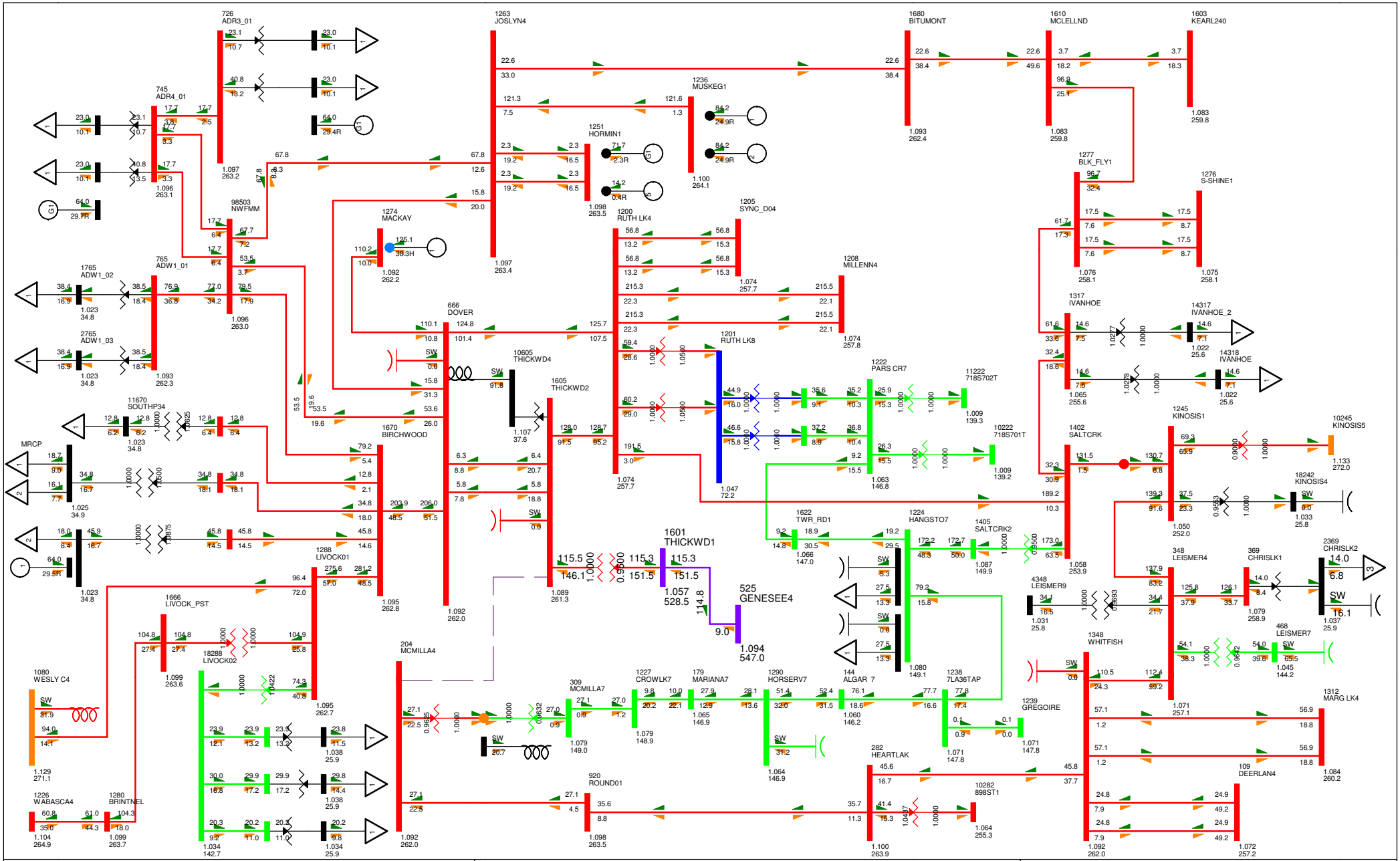

BC - Alberta (IMPORT)-31.4 MW

TASMO MODEL; OUTPUT GENERATED 2010-03-01 14:16:46
SWINGBUS 1520 FOR FC-2009-S-2020-10-31:14:14--1--1-0-0
FRI, AUG 12 2011 16:15

Figure G-2020SP-20

2020 NW FMM STUDY

Bus - VOLTAGE (kV/PU)
Branch - MW/Mvar
Equipment - MW/Mvar

100.0%RATEA
1.120OV 0.950UV
kV: <=34.500 <=69.000 <=138.000 <=240.000 <=500.000 >500.000

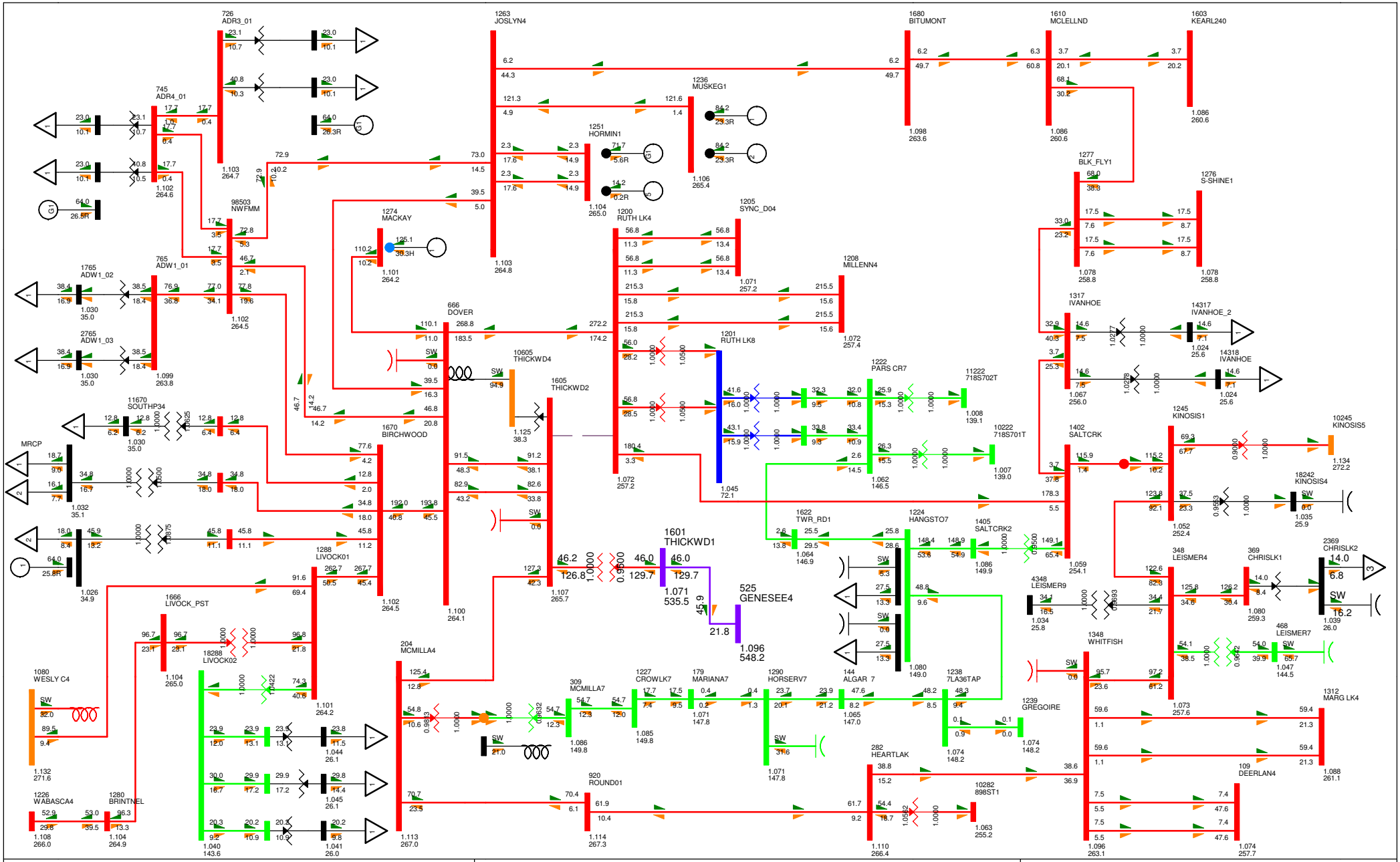

Figure G-2020SP-21

2020 NW FMM STUDY

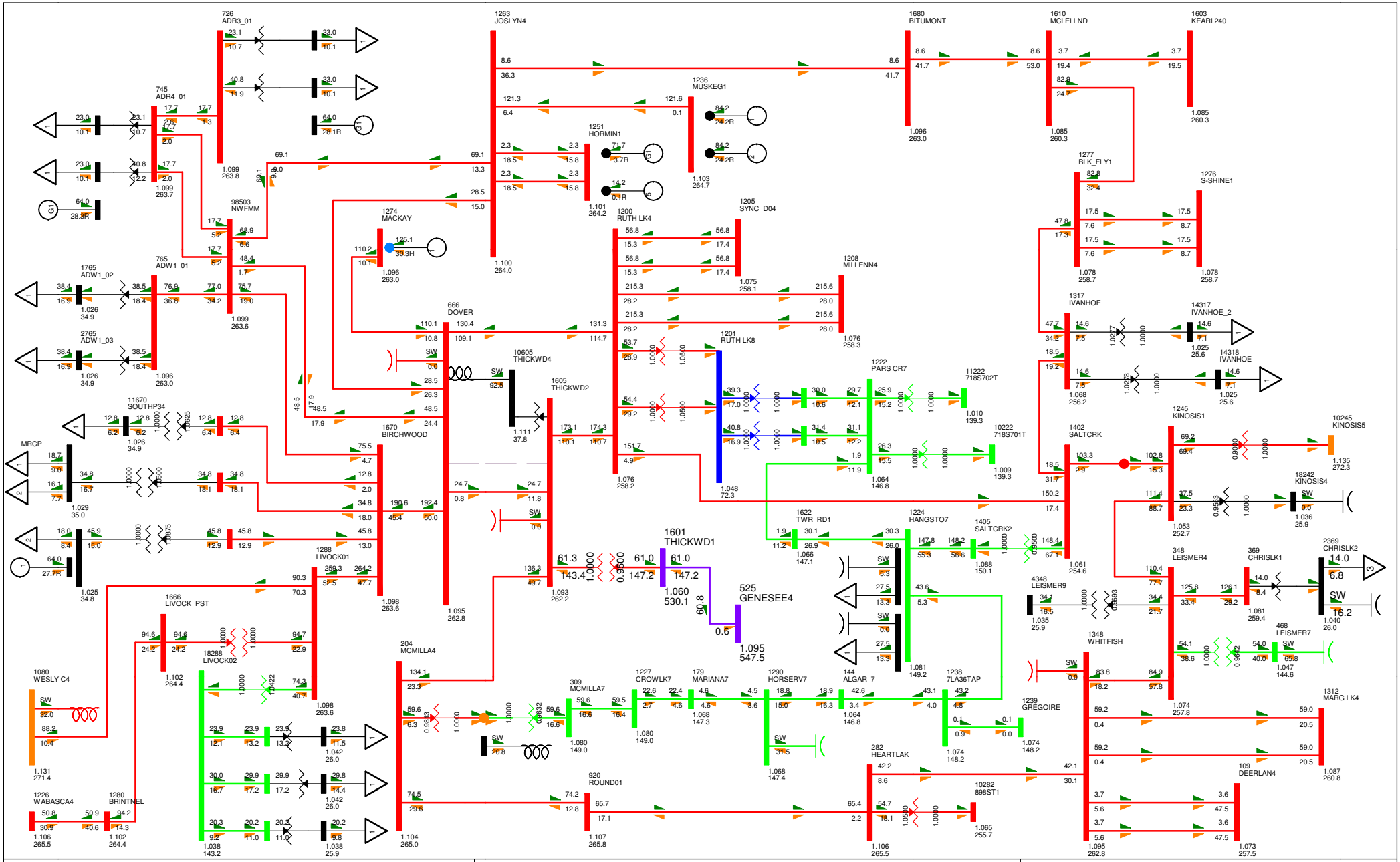

BC - Alberta (IMPORT)-35.7 MW

TASMO MODEL; OUTPUT GENERATED 2010-03-01 14:16:46
SWINGBUS 1520 FOR FC-2009-S-2020-10-31:14:14--1--1-0-0
FRI, AUG 12 2011 16:15

Figure G-2020SP-22

2020 NW FMM STUDY

Bus - VOLTAGE (kV/PU)
Branch - MW/Mvar
Equipment - MW/Mvar

100.0%RATEA
1.120OV 0.950UV
kV: <=34.500 <=69.000 <=138.000 <=240.000 <=500.000 >500.000

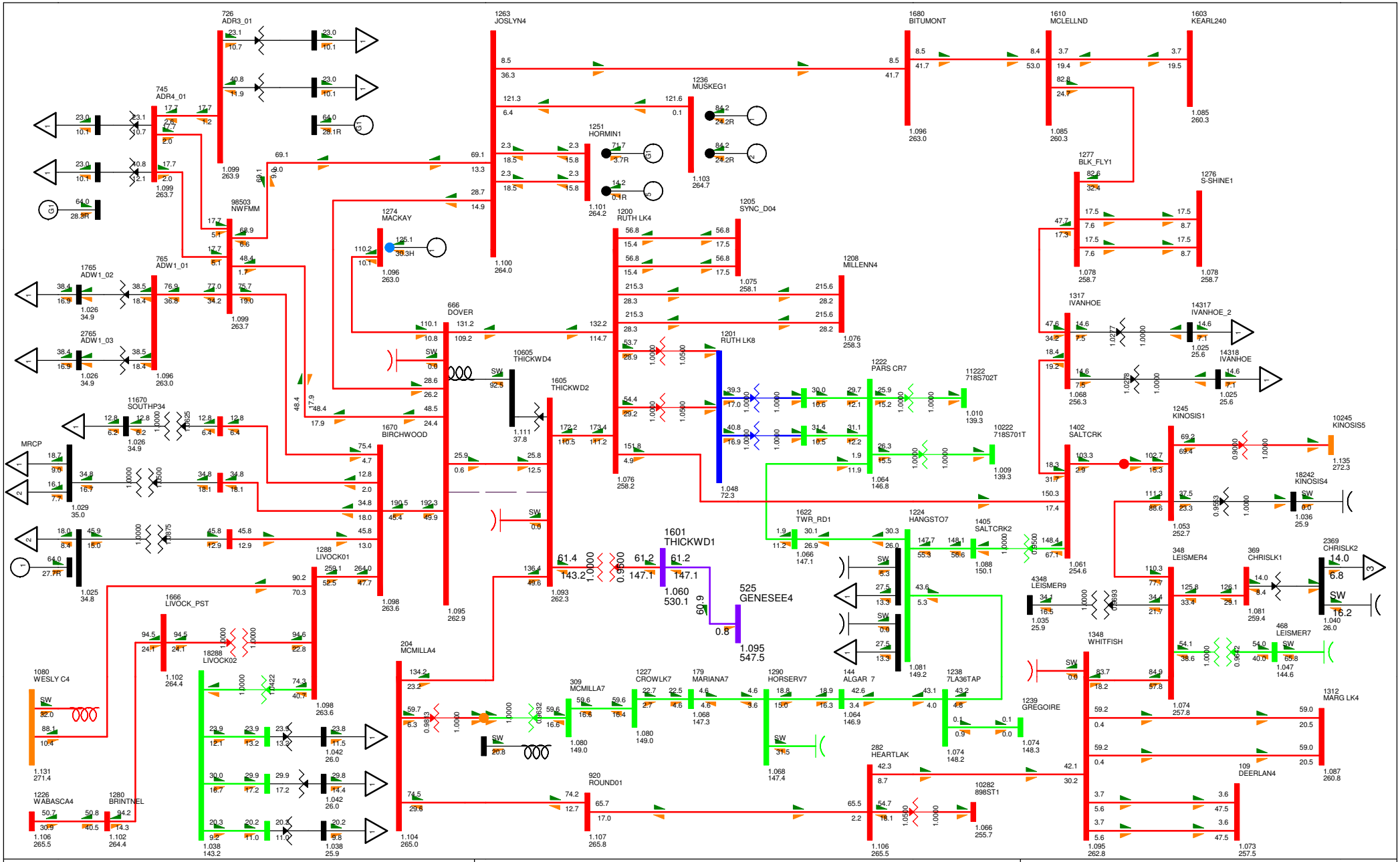

BC - Alberta (IMPORT)-35.7 MW

TASMO MODEL; OUTPUT GENERATED 2010-03-01 14:16:46
SWINGBUS 1520 FOR FC-2009-5-2020-10-31:14:14--1--1-0-0
FRI, AUG 12 2011 16:15

Figure G-2020SP-23

2020 NW FMM STUDY

Bus - VOLTAGE (kV/PU)
Branch - MW/Mvar
Equipment - MW/Mvar

100.0%RATEA
1.120OV 0.950UV
kV: <=34.500 <=69.000 <=138.000 <=240.000 <=500.000 >500.000

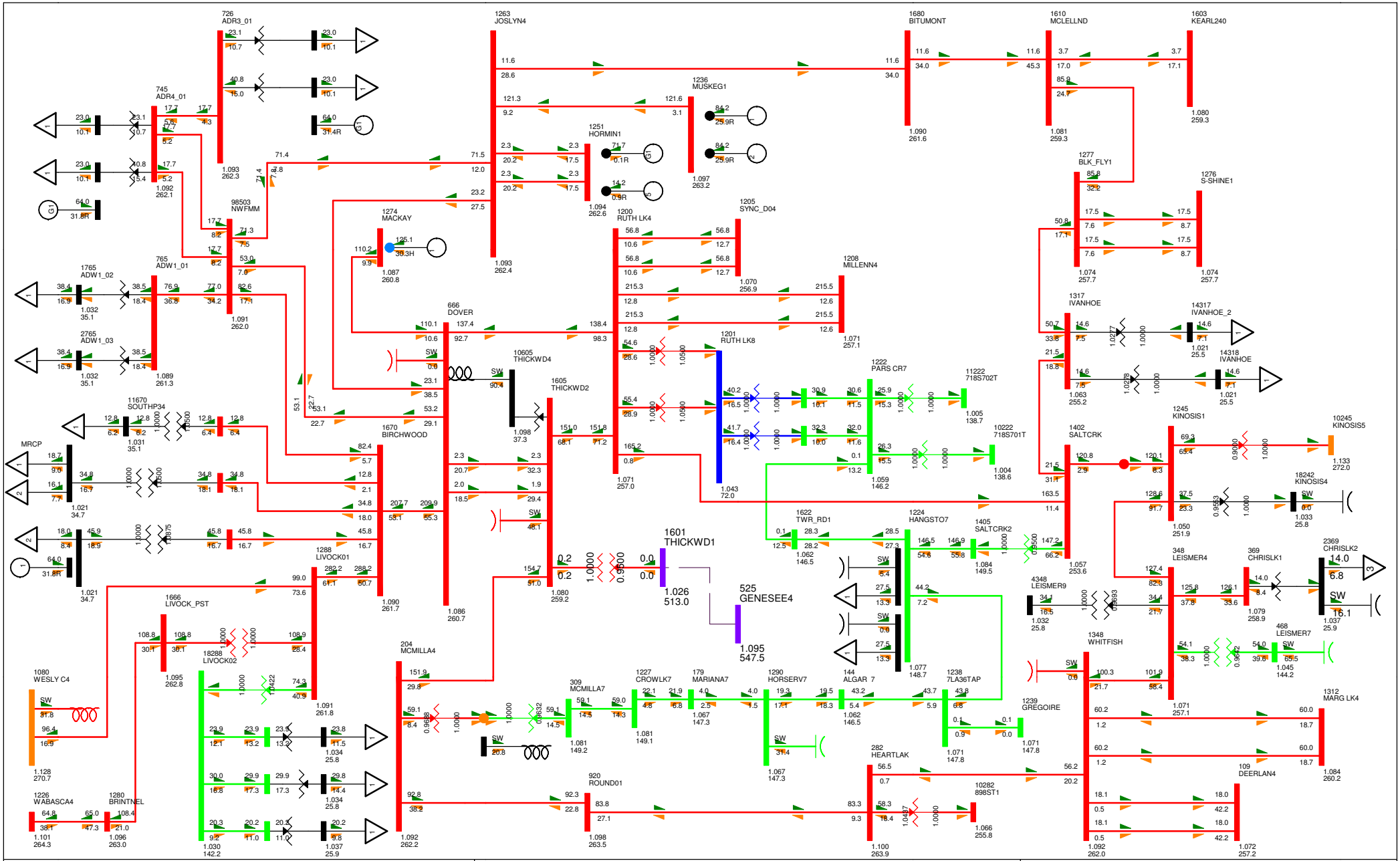
726 ADR3_01
745 ADR4_01
98503 NWFMM
765 ADW1_01
1765 ADW1_02
2765 ADW1_03
11670 SOUTHP34
MRCP
1080 WESLY C4
1226 WABASCA4
1280 BRINTNEL
1263 JOSLYN4
1236 MUSKEG1
1251 HORMIN1
1274 MACKAY
666 DOVER
1670 BIRCHWOOD
10605 THICKWD4
1605 THICKWD2
1601 THICKWD1
525 GENESEE4
1200 RUTH LK4
1201 RUTH LK8
1205 SYNC_D04
1208 MILLENN4
1222 PARS CR7
11222 718S702T
10222 718S701T
1680 BITUMONT
1610 MCLELLND
1603 KEARL240
1277 BLK_FLY1
1276 S-SHINE1
1317 IVANHOE
14317 IVANHOE_2
14318 IVANHOE
1402 SALTCRK
1245 KINOSIS1
10245 KINOSIS5
18242 KINOSIS4
348 LEISMER4
4348 LEISMER9
369 CHRISLK1
2369 CHRISLK2
468 LEISMER7
1348 WHITFISH
1239 GREGOIRE
1312 MARG LK4
109 DEERLAN4
1622 TWR_RD1
1405 SALTCRK2
1224 HANGSTO7
144 ALGAR 7
1227 CROWLK7
179 MARIANA7
1290 HORSERV7
1238 7LA36TAP
282 HEARTLAK
10282 898ST1
1666 LIVOCK_PST
18288 LIVOCK02
1288 LIVOCK01
204 MCMILLA4
309 MCMILLA7
920 ROUND01
BC - Alberta (IMPORT)-32.3 MW
TASMO MODEL; OUTPUT GENERATED 2010-03-01 14:16:46
SWINGBUS 1520 FOR FC-2009-5-2020-10-31:14:14--1--1-0-0
FRI, AUG 12 2011 16:15
Figure G-2020SP-24
2020 NW FMM STUDY
Bus - VOLTAGE (kV/PU)
Branch - MW/Mvar
Equipment - MW/Mvar
100.0%RATEA
1.120OV 0.950UV
kV: <=34.500 <=69.000 <=138.000 <=240.000 <=500.000 >500.000

ATTACHMENT H
Long Term PV Analysis

Table H-1: P-V Analysis Summary – 2020 Summer Peak

Figure Number	System Normal and Category B Contingencies	Forecasted 2020 Summer Peak (MW)	105% Margin (MW)	Nose Point (MW)
Figure H1-2020SP-1	Normal operation condition	2685	2819	3355
Figure H1-2020SP-2	SaltCreek 240/144 kV transformer	2685	2819	Voltage Collapse
Figure H1-2020SP-3	500 kV Thickwood 951S to Genesee	2685	2819	3165
Figure H1-2020SP-4	9L66 Muskeg River 847S to Joslyn 849S	2685	2819	3195
Figure H1-2020SP-5	240 kV 971L Conklin 762S to Sunday Creek	2685	2819	3245
Figure H1-2020SP-6	240 kV Kinosis 856S to Leismer 72S	2685	2819	3275
	Category C5 Contingencies	**Forecasted 2020 Summer Peak (MW)**	**102.5% Margin (MW)**	**Maximum Operating Limit (MW)**
Figure H1-2020SP-7	9L08 9L09, Dover 888S to Ells River 2079S and Joslyn 849S Double Circuit 240 kV Lines	2685	2752	3235
Figure H1-2020SP-8	9L76 9L09, Joslyn 849S to Ells River 2079S and Dover 888S Double Circuit 240 kV Lines	2685	2752	3165
Figure H1-2020SP-9	9L01 9L58, Dover 888S to Ruth Lake 848S Double Circuit 240 kV Lines	2685	2752	3335

TASMO MODEL; OUTPUT GENERATED 2010-03-01 14:45:14
SWINGBUS 1520 FOR FC-2009-5:2016-04-30:19:24--1--1-0-0
MON, AUG 08 2011 14:26

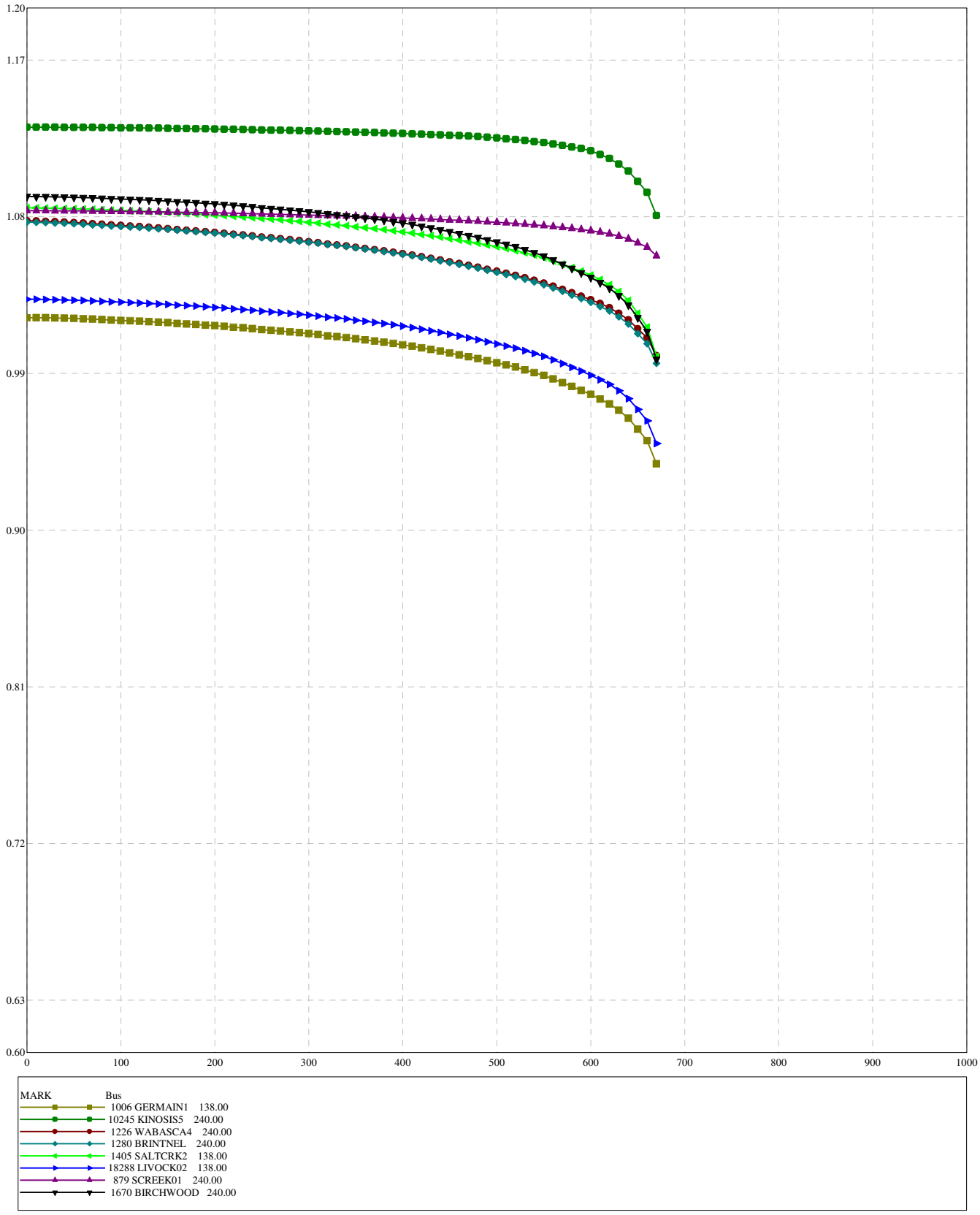

Figure H1-2020SP-1

TASMO MODEL; OUTPUT GENERATED 2010-03-01 14:16:46
SWINGBUS 1520 FOR FC-2009-5:2020-10-31:14:14--1--1-0-0
MON, AUG 08 2011 16:18

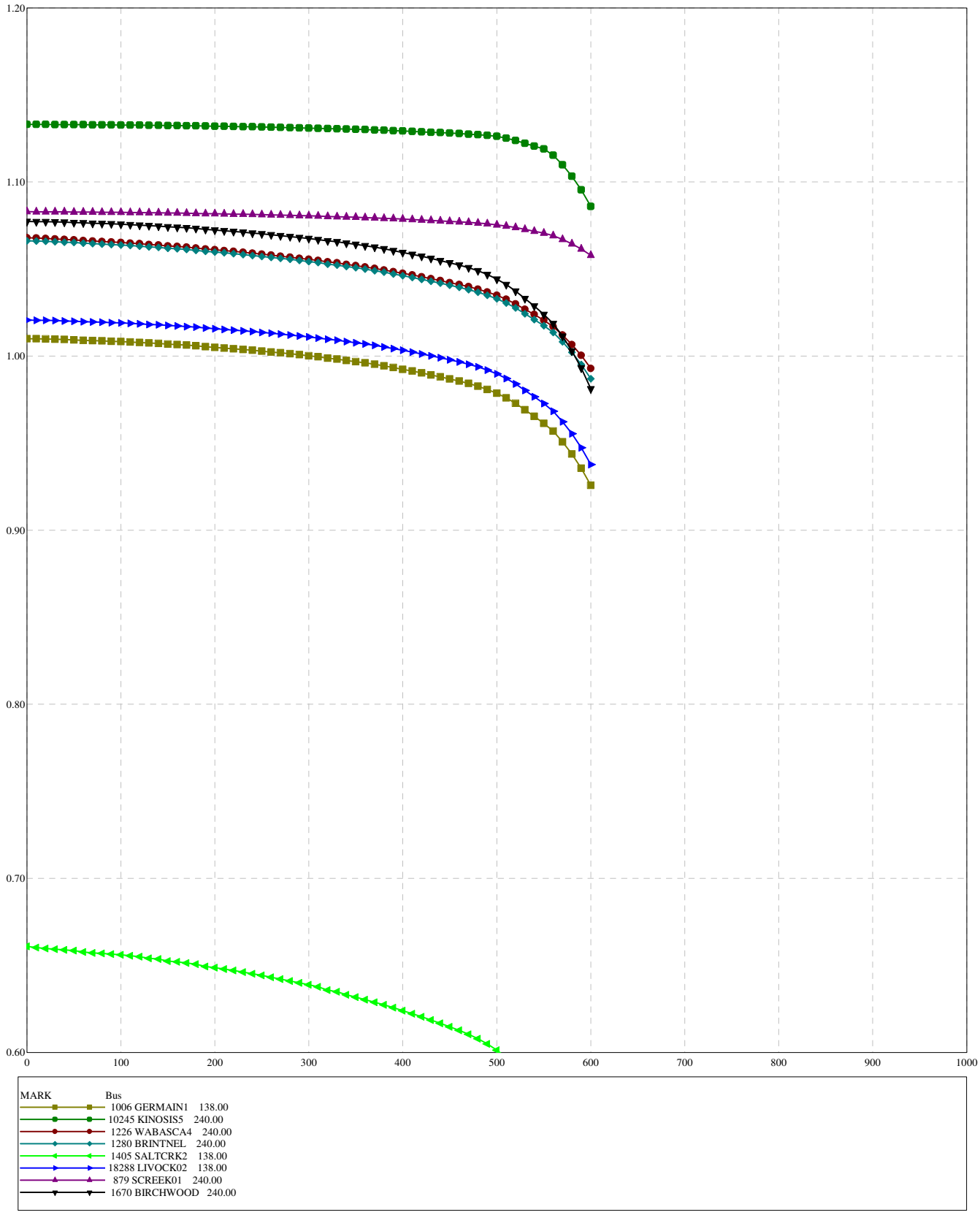

Figure H1-2020SP-2

TASMO MODEL; OUTPUT GENERATED 2010-03-01 14:45:14
SWINGBUS 1520 FOR FC-2009-5:2016-04-30:19:24--1--1-0-0
MON, AUG 08 2011 14:27

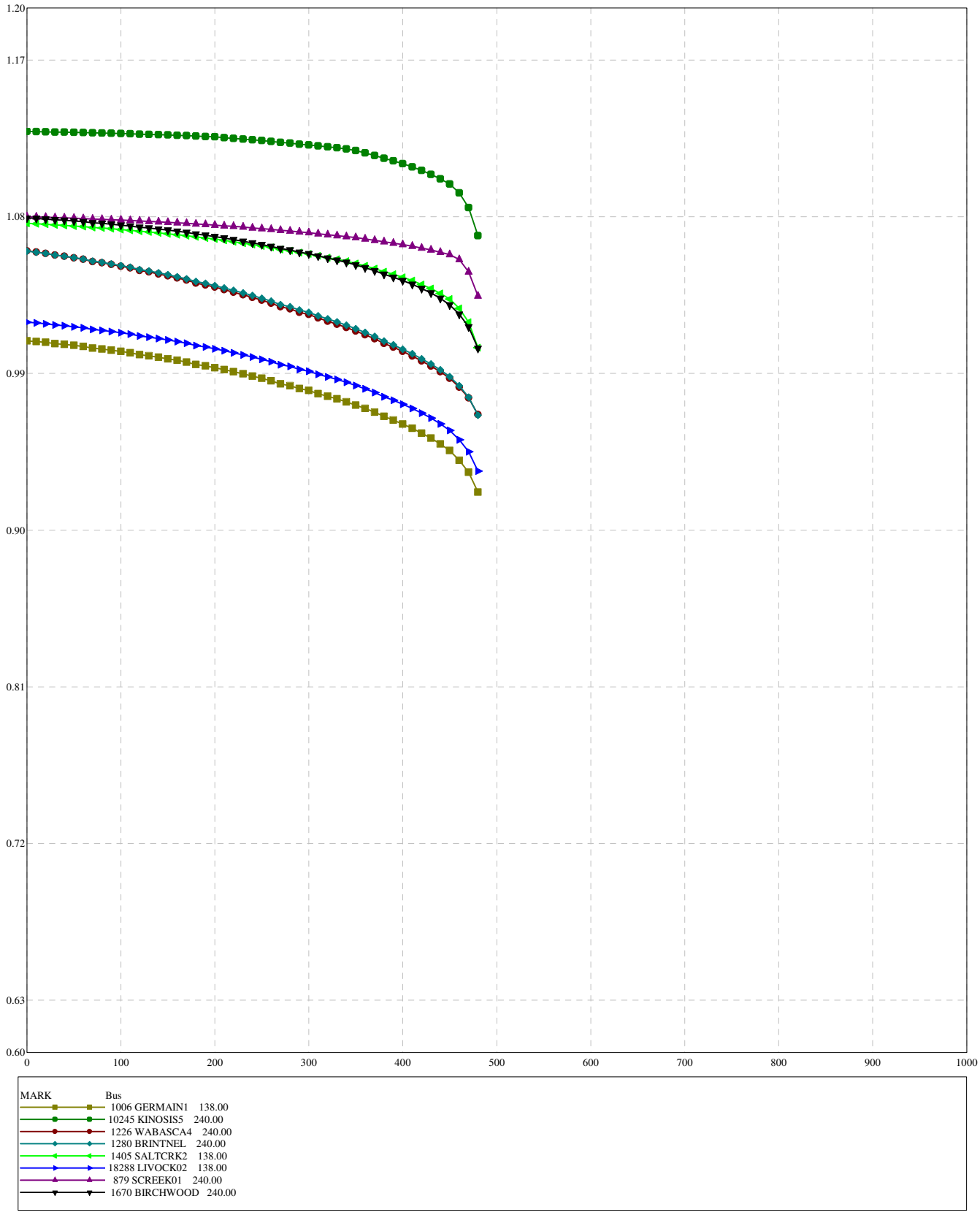

Figure H1-2020SP-3

TASMO MODEL; OUTPUT GENERATED 2010-03-01 14:45:14
SWINGBUS 1520 FOR FC-2009-5:2016-04-30:19:24--1--1-0-0
MON, AUG 08 2011 14:28

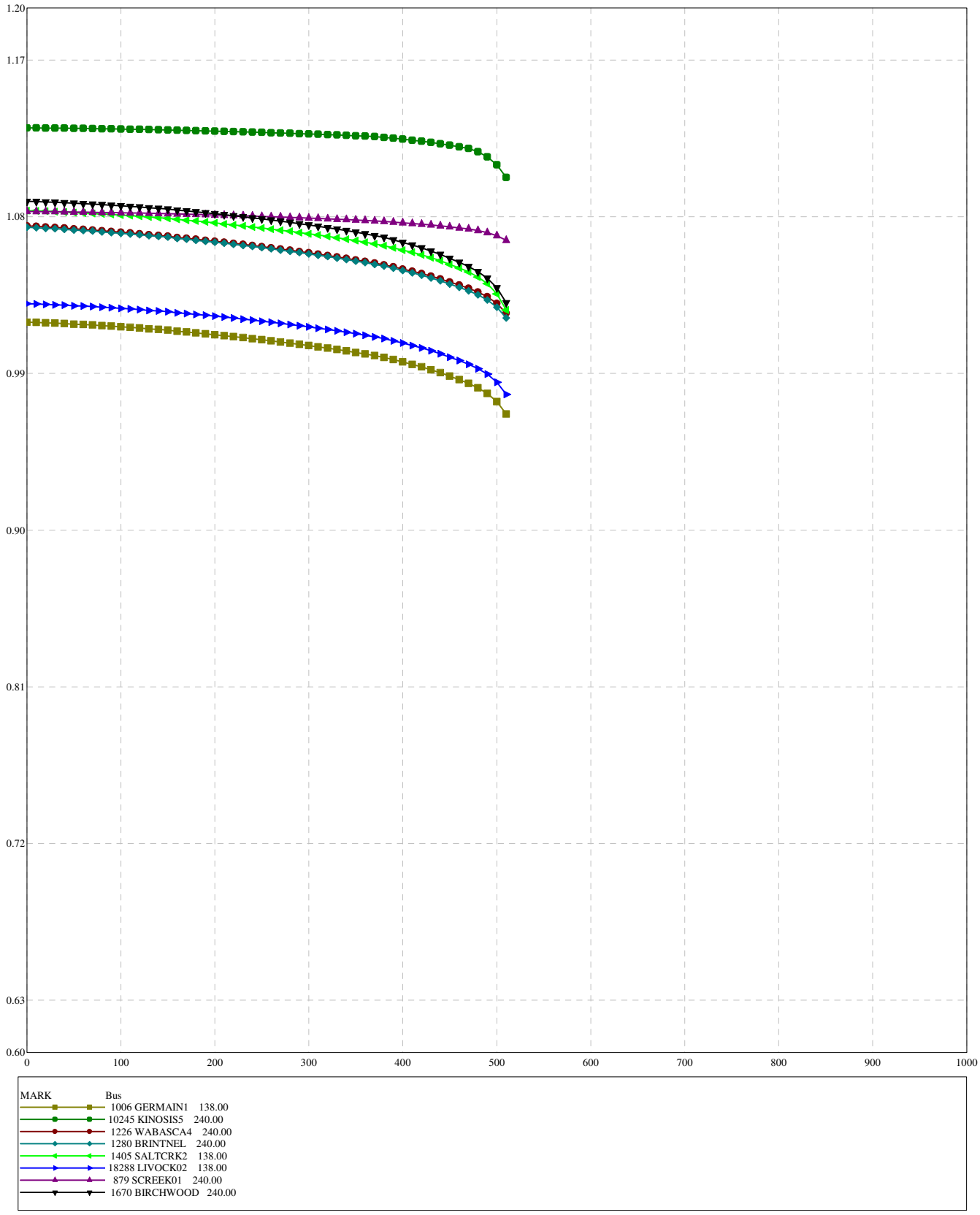

Figure H1-2020SP-4

TASMO MODEL; OUTPUT GENERATED 2010-03-01 14:45:14
SWINGBUS 1520 FOR FC-2009-5:2016-04-30:19:24--1--1-0-0
MON, AUG 08 2011 14:28

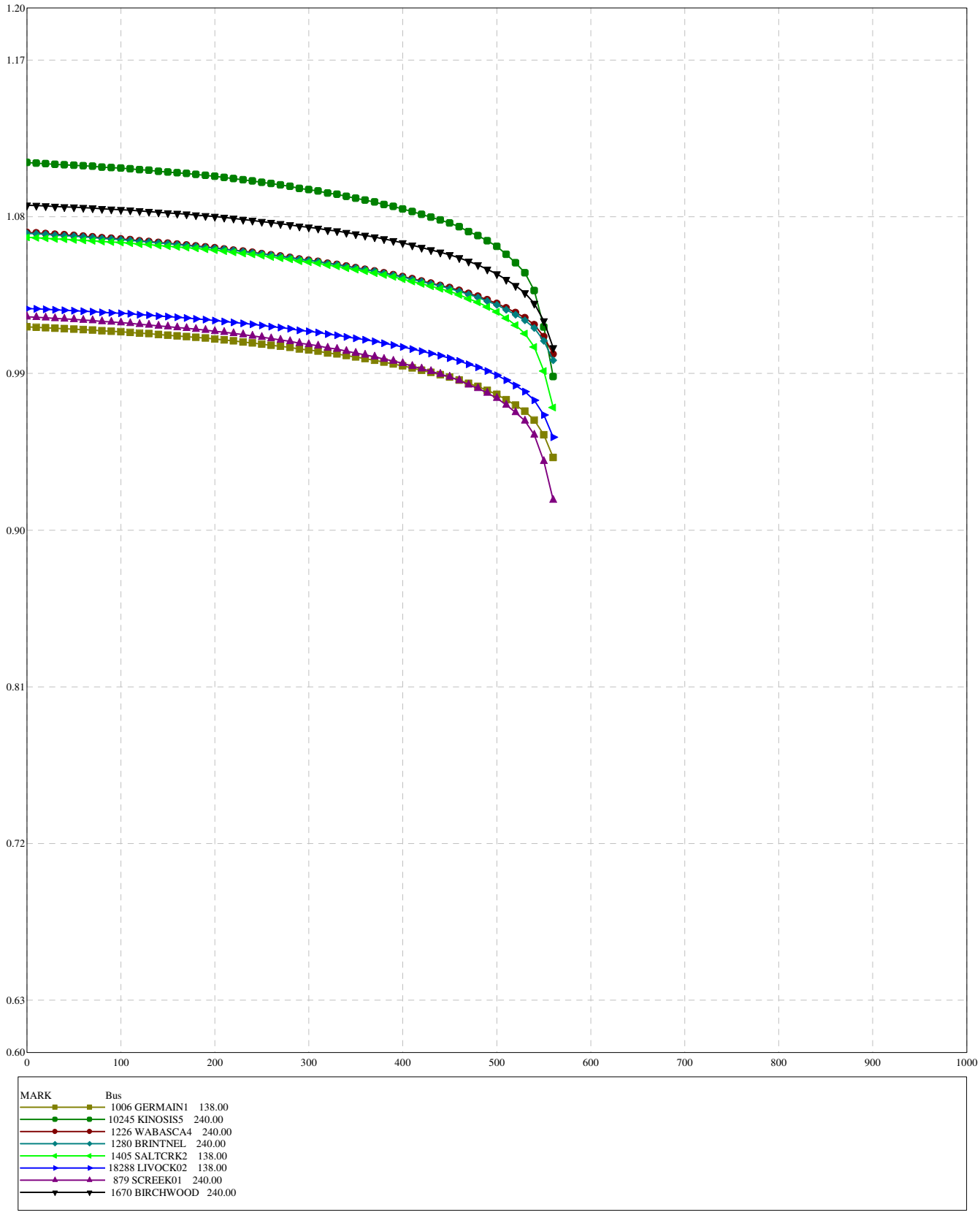

Figure H1-2020SP-5

TASMO MODEL; OUTPUT GENERATED 2010-03-01 14:16:46
SWINGBUS 1520 FOR FC-2009-5:2020-10-31:14:14--1--1-0-0
MON, AUG 08 2011 16:19

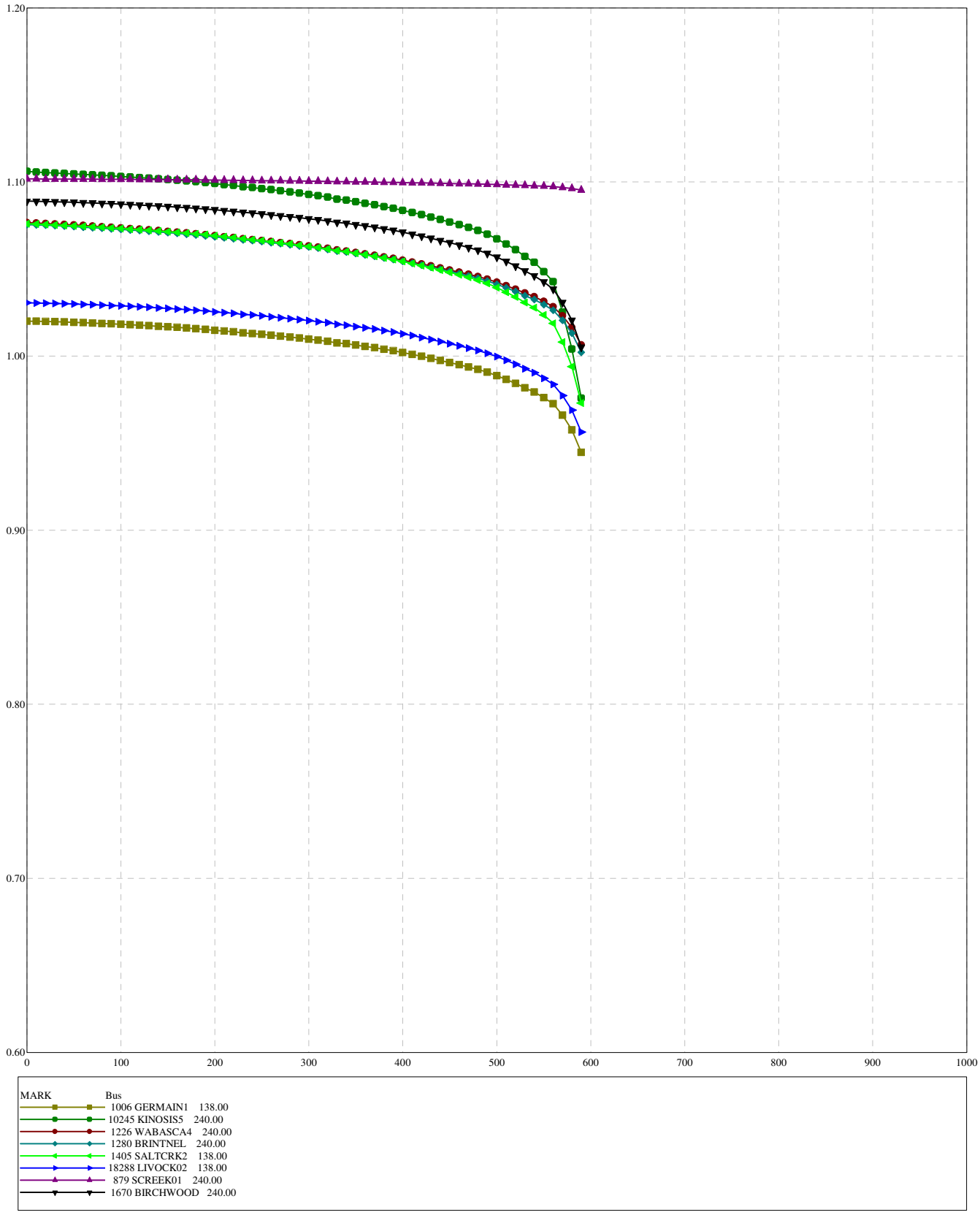

Figure H1-2020SP-6

TASMO MODEL; OUTPUT GENERATED 2010-03-01 14:45:14
SWINGBUS 1520 FOR FC-2009-5:2016-04-30:19:24--1--1-0-0
MON, AUG 08 2011 14:27

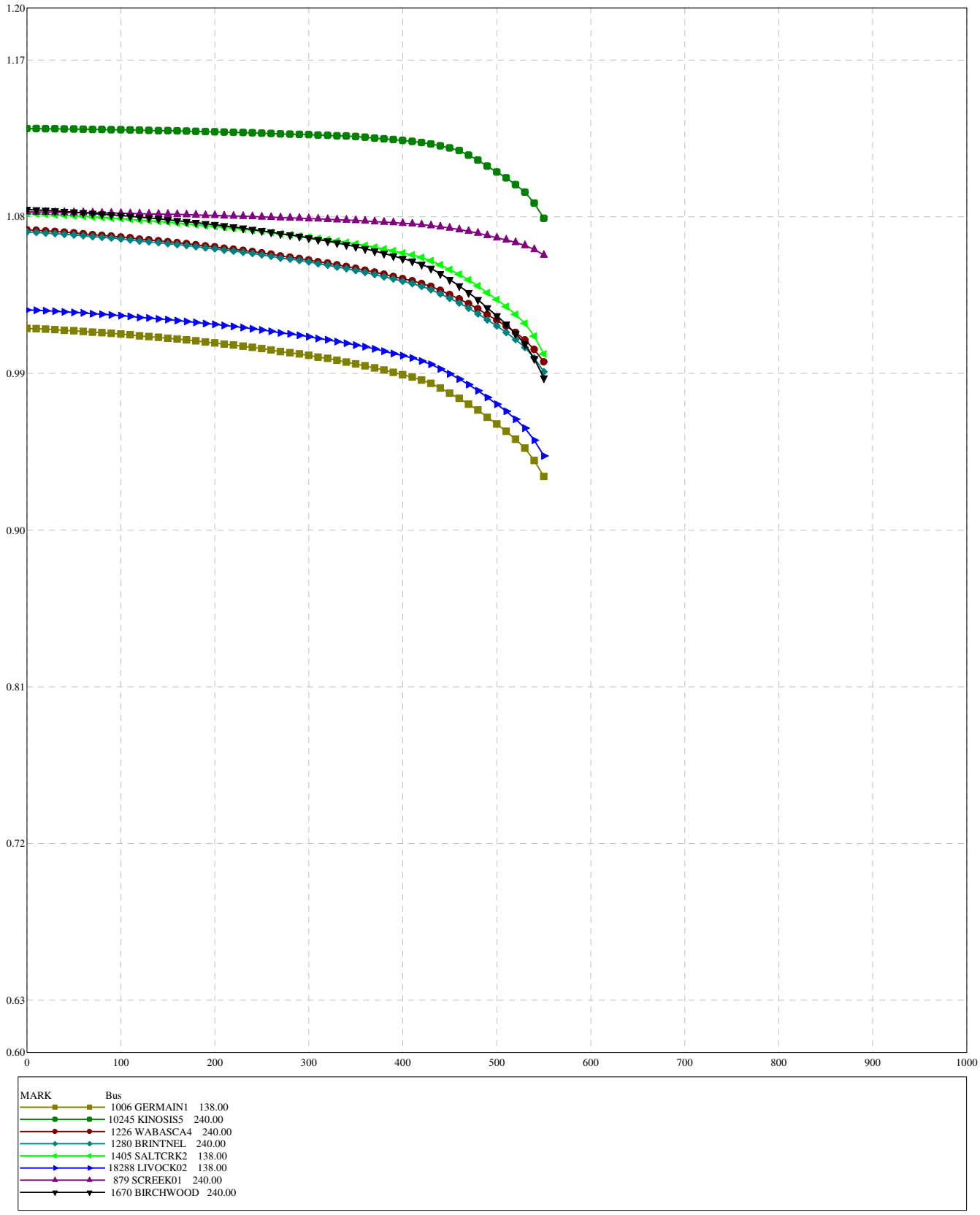

Figure H1-2020SP-7

TASMO MODEL; OUTPUT GENERATED 2010-03-01 14:45:14
SWINGBUS 1520 FOR FC-2009-5:2016-04-30:19:24--1--1-0-0
MON, AUG 08 2011 14:27

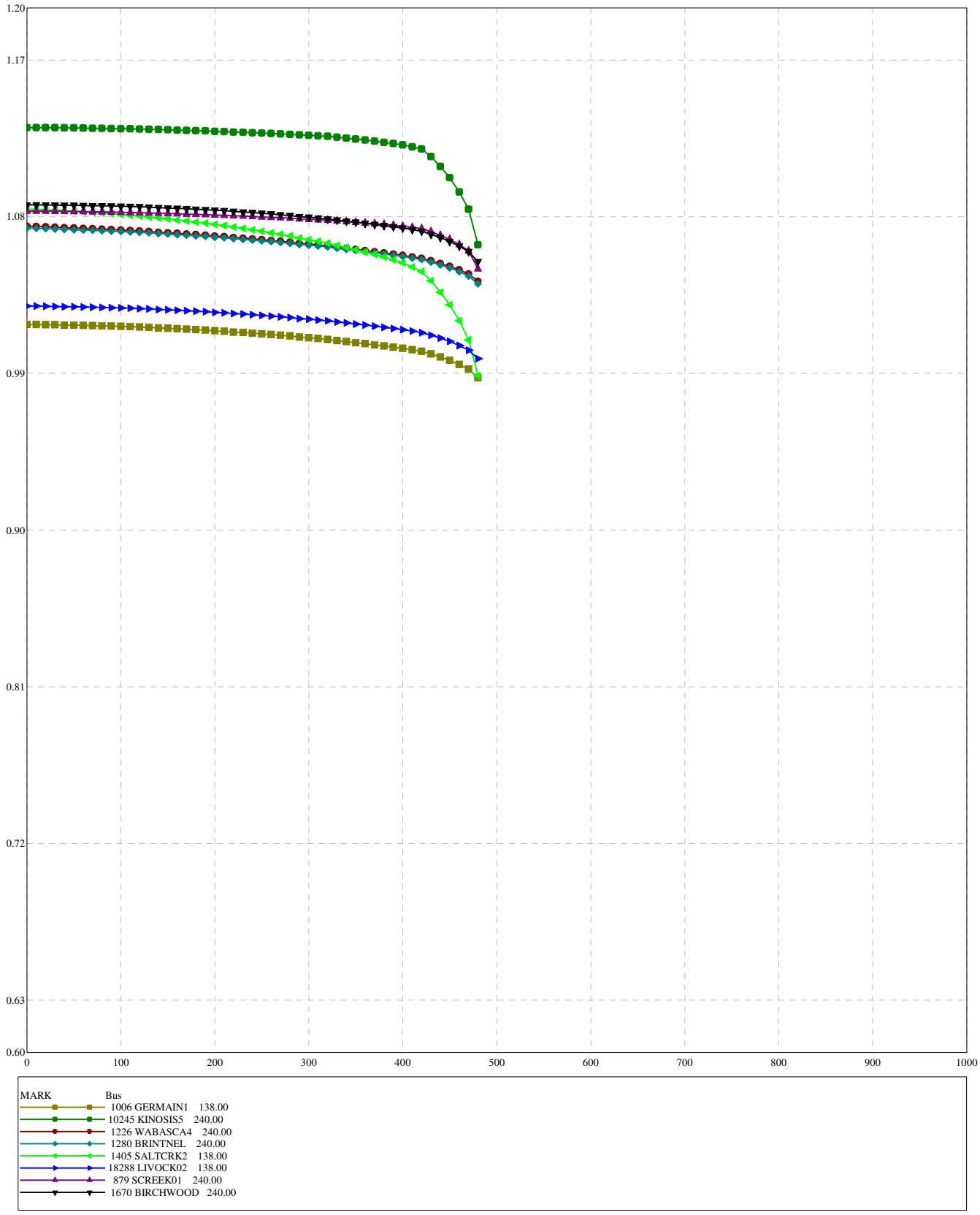

Figure H1-2020SP-8

TASMO MODEL; OUTPUT GENERATED 2010-03-01 14:45:14
SWINGBUS 1520 FOR FC-2009-5:2016-04-30:19:24--1--1-0-0
MON, AUG 08 2011 14:26

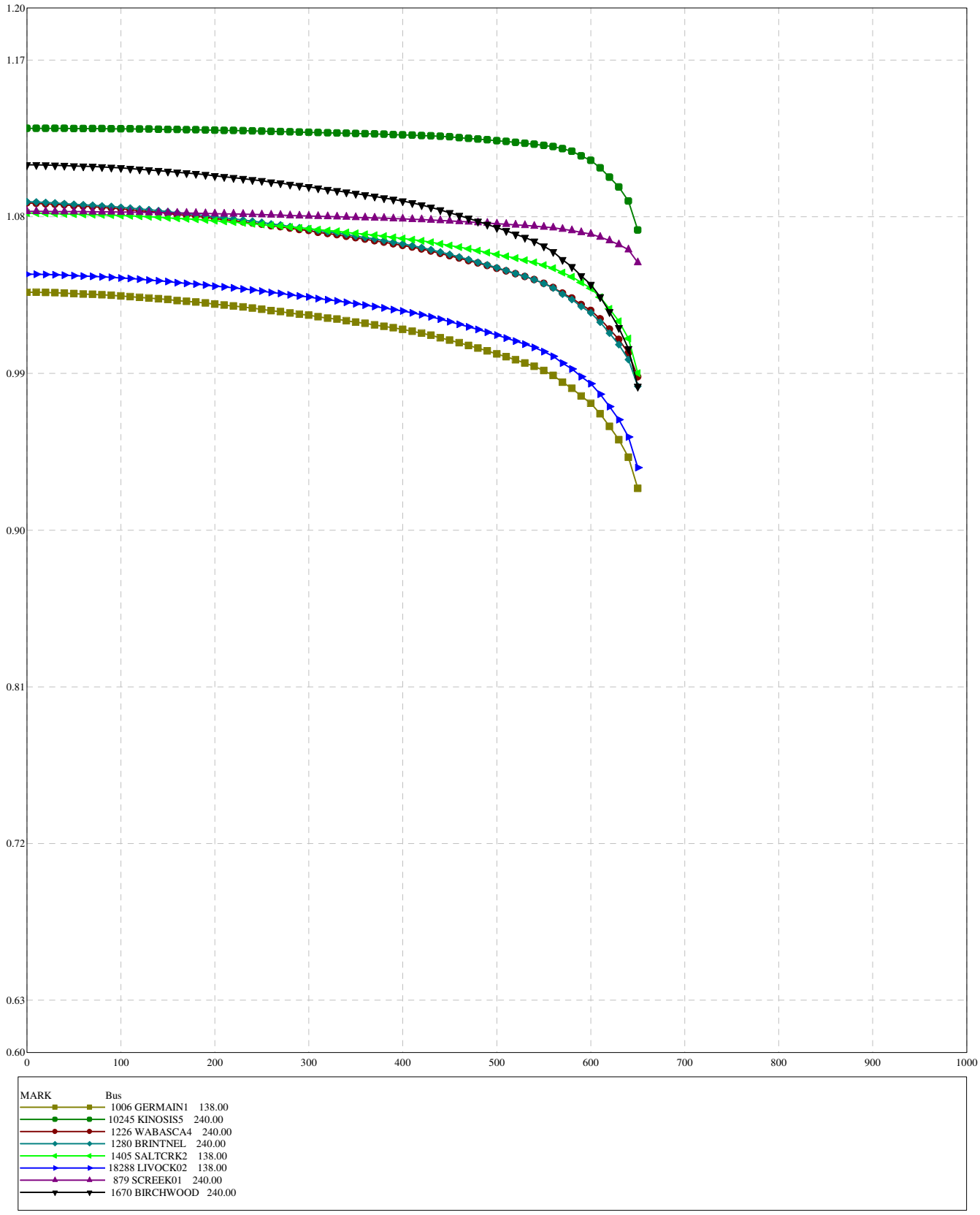

Figure H1-2020SP-9

Table H-2: P-V Analysis Summary – 2020 Winter Peak

Figure Number	System Normal and Category B Contingencies	Forecasted 2020 Winter Peak (MW)	105% Margin (MW)	Nose Point (MW)
Figure H2-2020WP-1	Normal operation condition	2782	2921	3472
Figure H2-2020WP-2	SaltCreek 240/144 kV transformer	2782	2921	Voltage collapse
Figure H2-2020WP-3	500 kV Thickwood 951S to Genesee	2782	2921	3202
Figure H2-2020WP-4	9L66 Muskeg River 847S to Joslyn 849S	2782	2921	3312
Figure H2-2020WP-5	240 kV 971L Conklin 762S to Sunday Creek	2782	2921	3332
Figure H2-2020WP-6	240 kV Kinosis 856S to Leismer 72S	2782	2921	3402
	Category C5 Contingencies	**Forecasted 2020 Winter Peak (MW)**	**102.5% Margin (MW)**	**Maximum Operating Limit (MW)**
Figure H2-2020WP-7	9L08 9L09, Dover 888S to Ells River 2079S and Joslyn 849S Double Circuit 240 kV Lines	2782	2852	3352
Figure H2-2020WP-8	9L76 9L09, Joslyn 849S to Ells River 2079S and Dover 888S Double Circuit 240 kV Lines	2782	2852	3252
Figure H2-2020WP-9	9L01 9L58, Dover 888S to Ruth Lake 848S Double Circuit 240 kV Lines	2782	2852	3442

TASMO MODEL; OUTPUT GENERATED 2010-03-01 14:45:14
SWINGBUS 1520 FOR FC-2009-5:2016-04-30:19:24--1--1-0-0
MON, AUG 08 2011 14:26

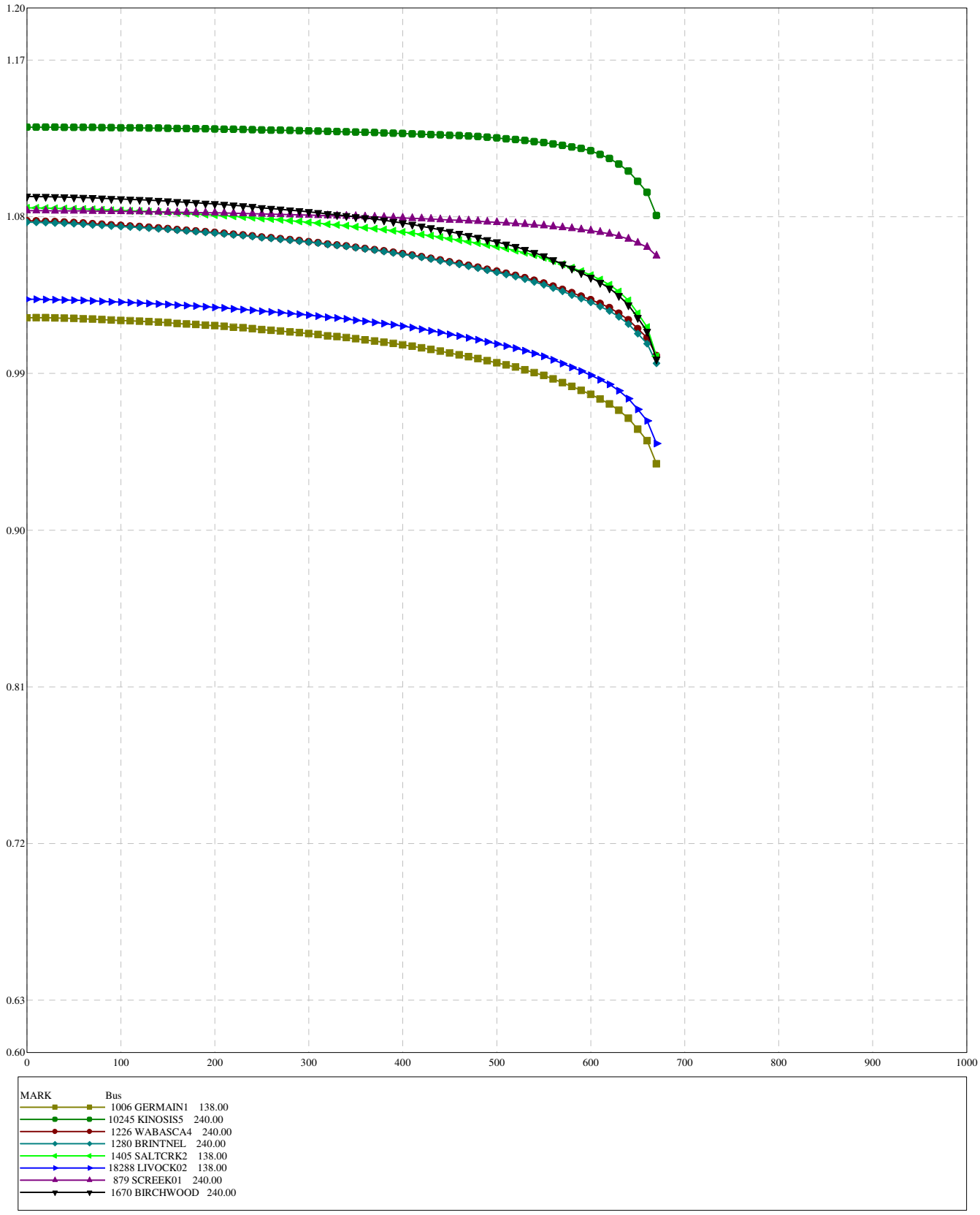

Figure H1-2020SP-1

TASMO MODEL; OUTPUT GENERATED 2010-03-01 14:16:46
SWINGBUS 1520 FOR FC-2009-5:2020-10-31:14:14--1--1-0-0
MON, AUG 08 2011 16:18

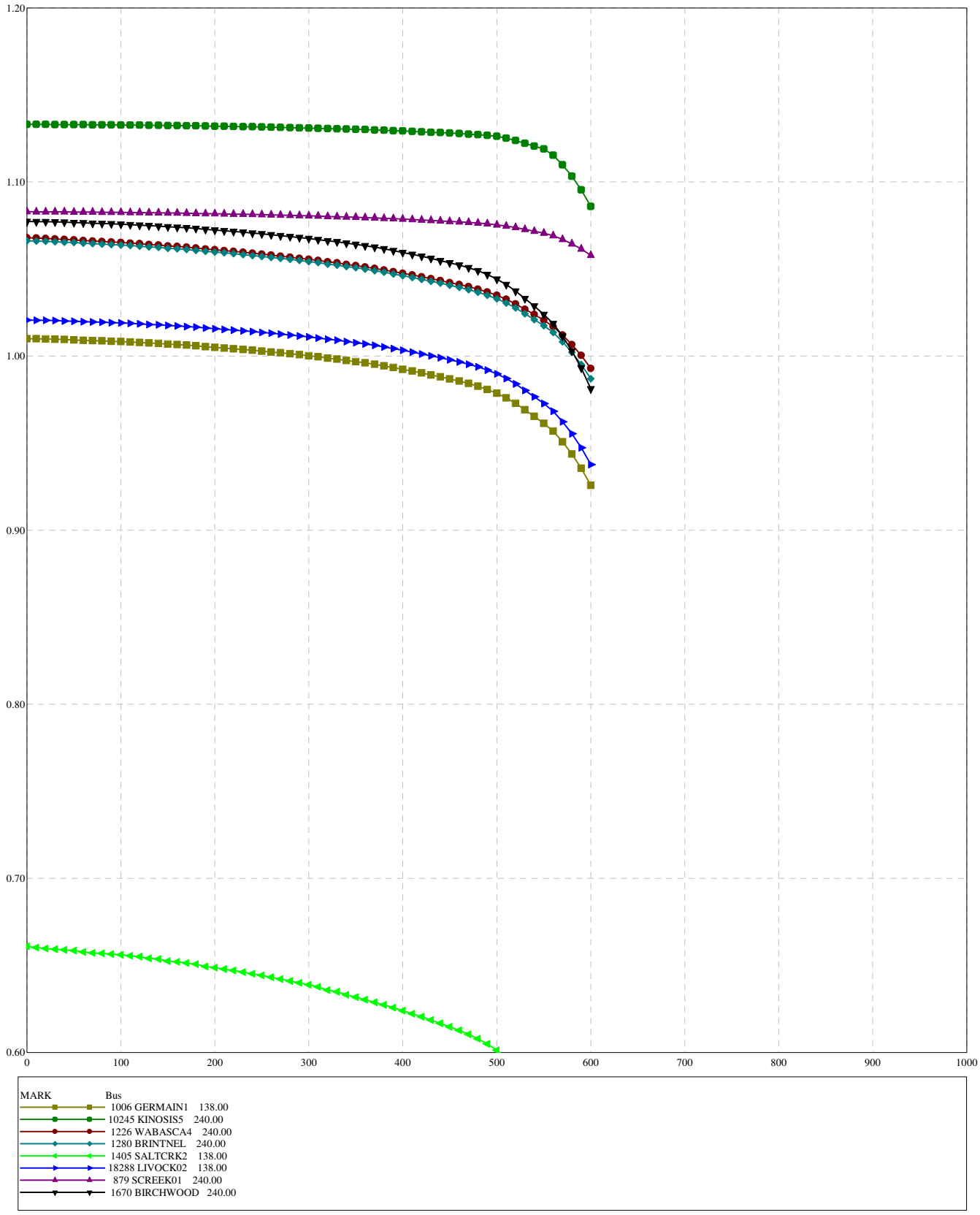

Figure H1-2020SP-2

TASMO MODEL; OUTPUT GENERATED 2010-03-01 14:45:14
SWINGBUS 1520 FOR FC-2009-5:2016-04-30:19:24--1--1-0-0
MON, AUG 08 2011 14:27

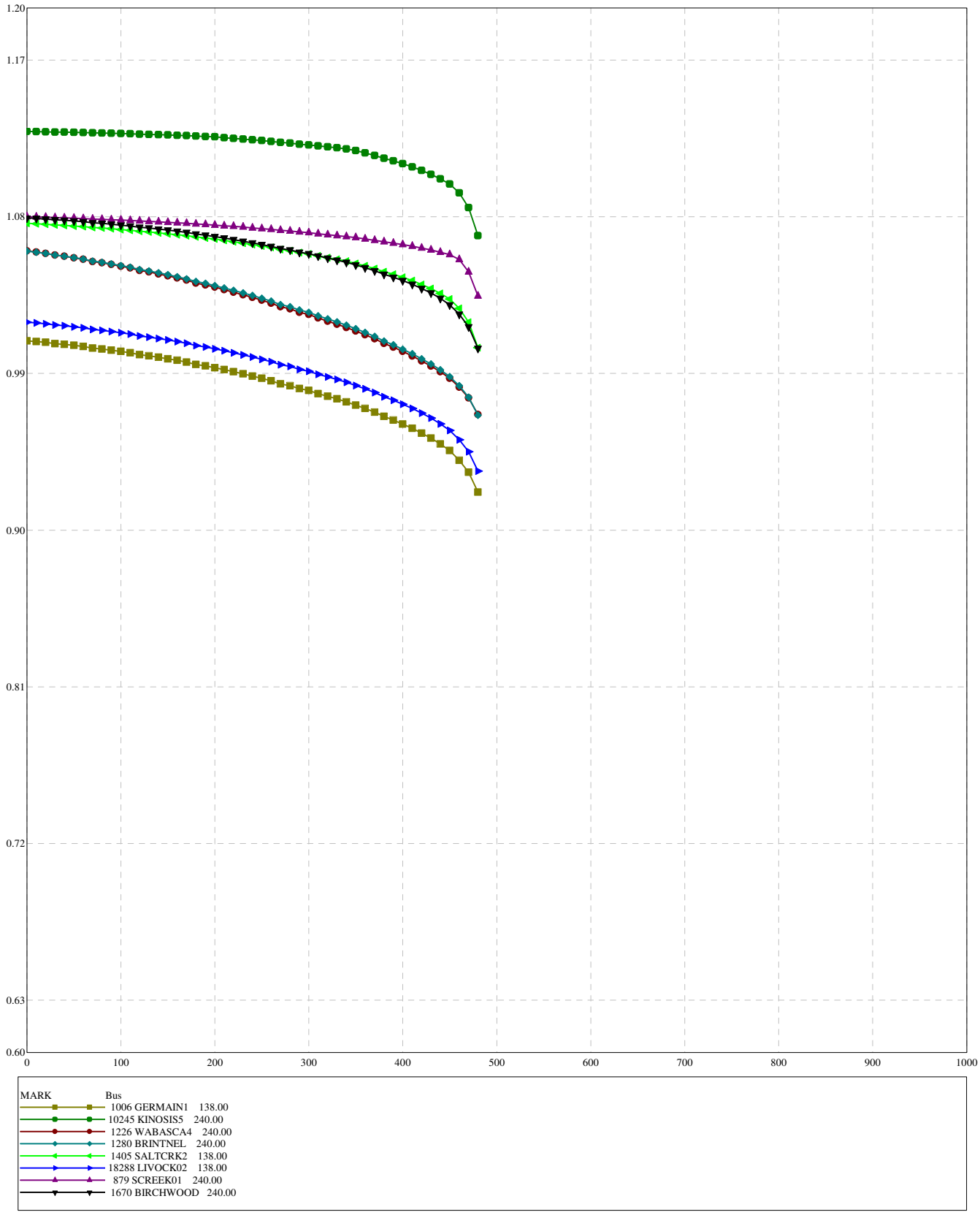

Figure H1-2020SP-3

TASMO MODEL; OUTPUT GENERATED 2010-03-01 14:45:14
SWINGBUS 1520 FOR FC-2009-5:2016-04-30:19:24--1--1-0-0
MON, AUG 08 2011 14:28

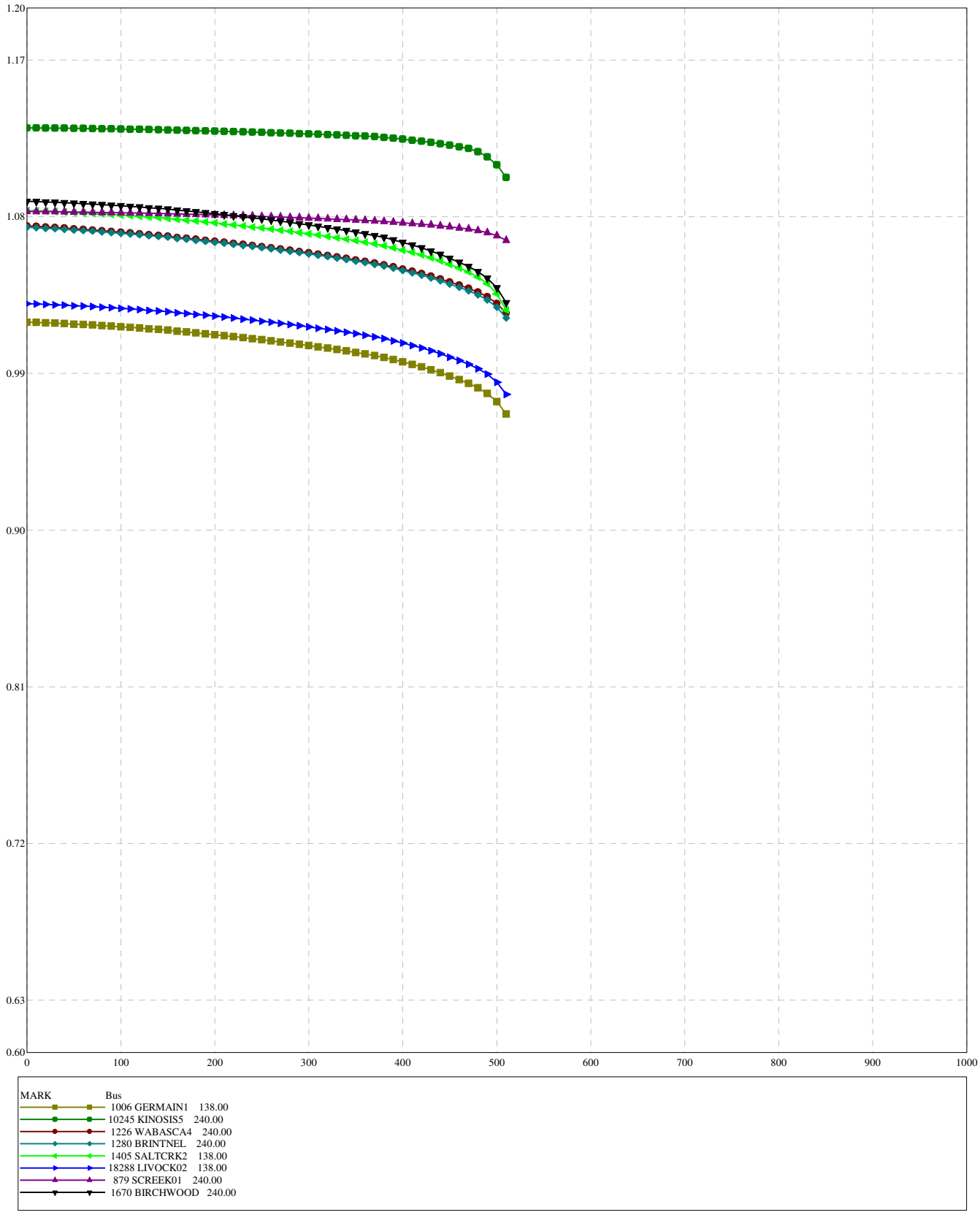

Figure H1-2020SP-4

TASMO MODEL; OUTPUT GENERATED 2010-03-01 14:45:14
SWINGBUS 1520 FOR FC-2009-5:2016-04-30:19:24--1--1-0-0
MON, AUG 08 2011 14:28

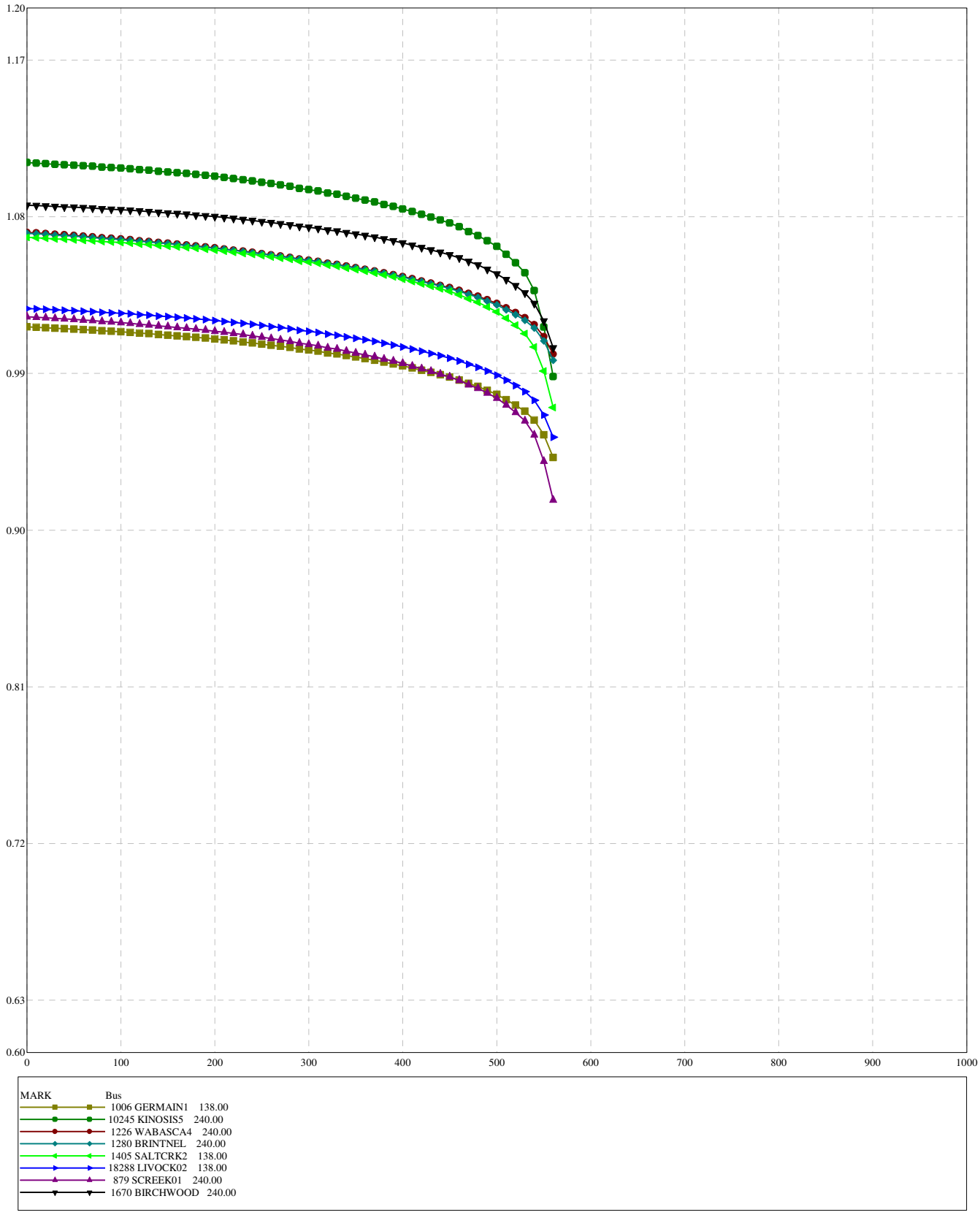

Figure H1-2020SP-5

TASMO MODEL; OUTPUT GENERATED 2010-03-01 14:16:46
SWINGBUS 1520 FOR FC-2009-5:2020-10-31:14:14--1--1-0-0
MON, AUG 08 2011 16:19

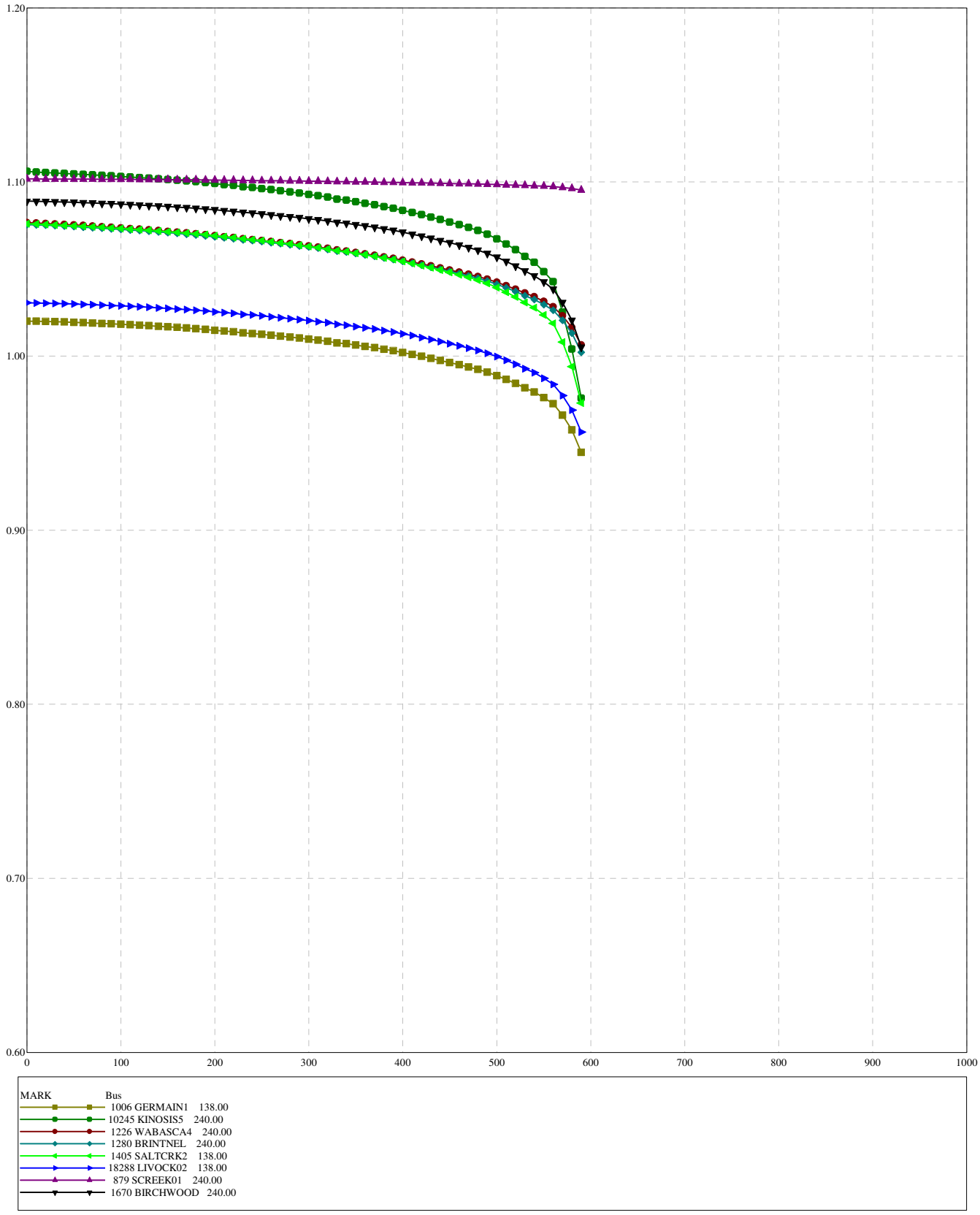

Figure H1-2020SP-6

TASMO MODEL; OUTPUT GENERATED 2010-03-01 14:45:14
SWINGBUS 1520 FOR FC-2009-5:2016-04-30:19:24--1--1-0-0
MON, AUG 08 2011 14:27

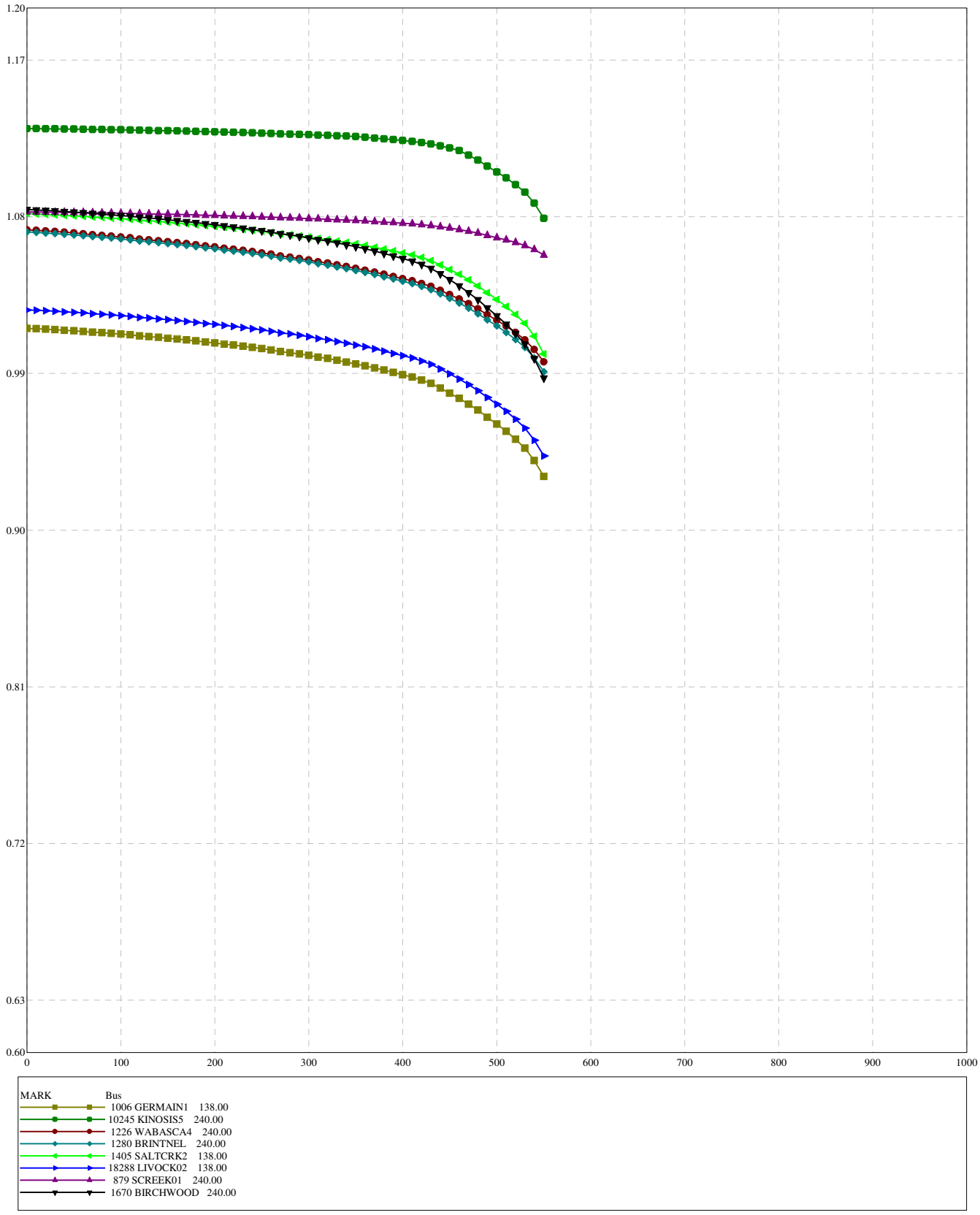

Figure H1-2020SP-7

TASMO MODEL; OUTPUT GENERATED 2010-03-01 14:45:14
SWINGBUS 1520 FOR FC-2009-5:2016-04-30:19:24--1--1-0-0
MON, AUG 08 2011 14:27

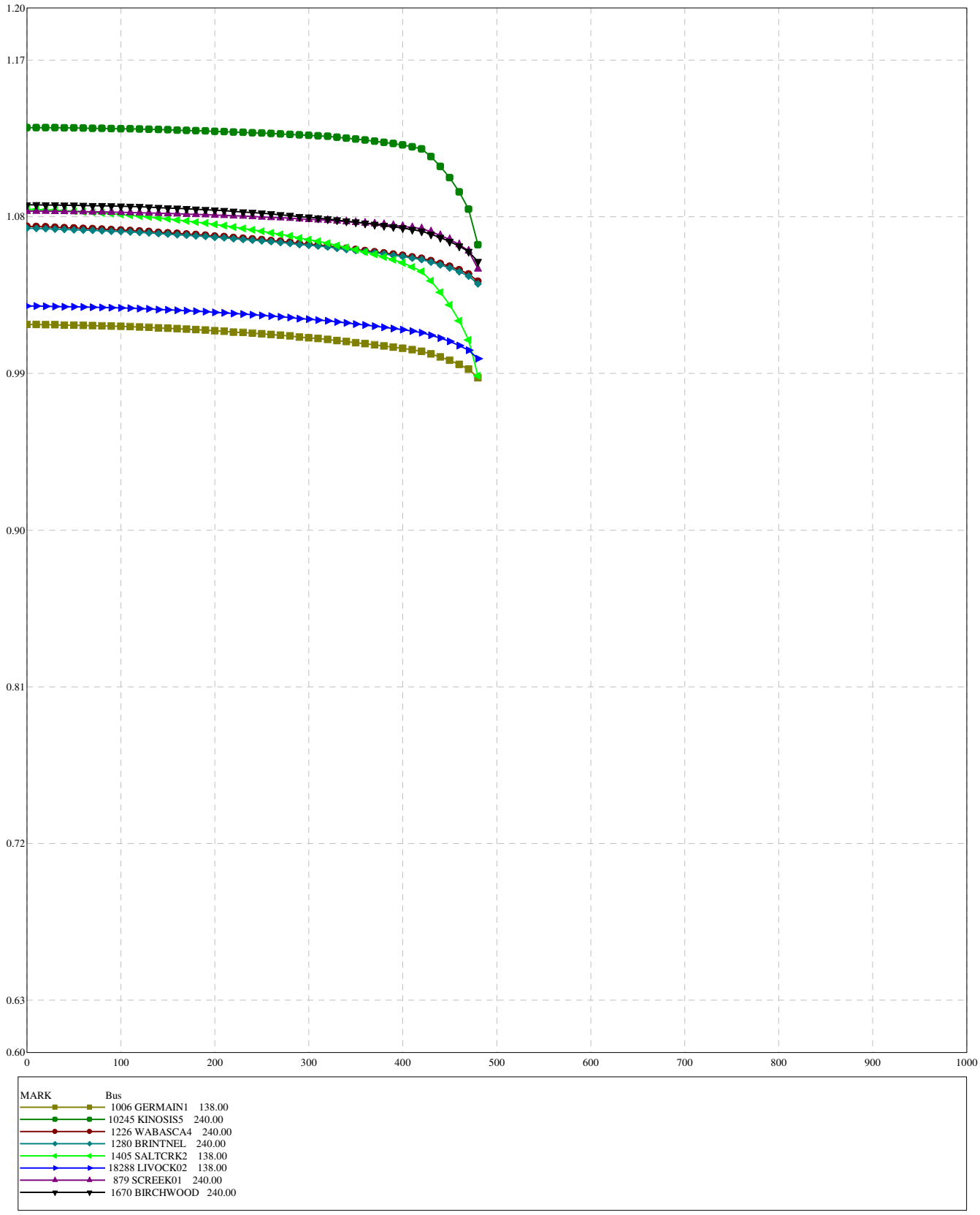

Figure H1-2020SP-8

TASMO MODEL; OUTPUT GENERATED 2010-03-01 14:45:14
SWINGBUS 1520 FOR FC-2009-5:2016-04-30:19:24--1--1-0-0
MON, AUG 08 2011 14:26

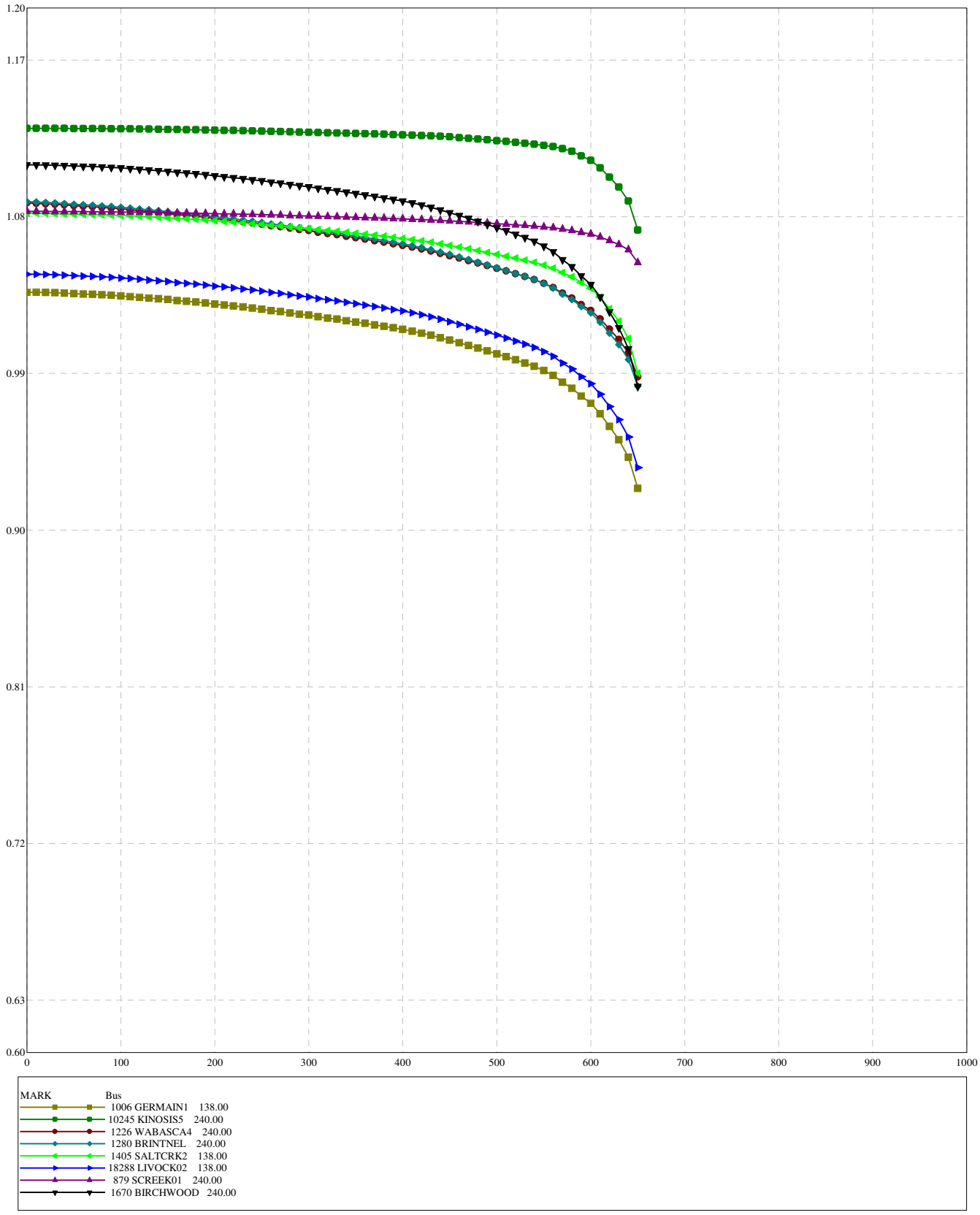

Figure H1-2020SP-9

ATTACHMENT I
Short Circuit Analysis

Table I-1: 2013 Existing System Maximum Short Circuit Results

Substation	Base Voltage (kV)	Pre-fault Voltage (p.u.)	3-phase		Single-phase-to-ground	
			Positive Sequence Impedance (p.u.) [1]	Current (kA)	Zero Sequence Impedance (p.u.) [1]	Current (kA)
Dover 888S	240	1.12	0.004052+j0.022065	11.9	0.004414+j0.030888	10.7
Joslyn 849S	240	1.1	0.005031+j0.027780	9.4	0.011635+j0.069203	6.4
Livock 939S	240	1.11	0.012959+j0.056742	4.6	0.046399+j0.287172	2.0
Brintnell 876S	240	1.1	0.014224+j0.056119	4.6	0.002546+j0.057030	4.6
Wesley Creek 834S	240	1.1	0.018062+j0.064977	4.0	0.002179+j0.042958	4.5
RuthLake 848S	240	1.1	0.003050+j0.018389	14.2	0.001387+j0.015110	15.3
Kinosis 856S	240	1.067	0.009051+j0.040371	6.2	0.017506+j0.085119	4.5
McMillan 885S	240	1.11	0.014049+j0.065058	4.0	0.009585+j0.085491	3.7
Salt Creek 977S	240	1.076	0.007514+j0.033693	7.5	0.008583+j0.050914	6.5

Note: 1) per unit (p.u.) quantities are on 100MVA base.

Table I-2: 2013 Existing System Minimum Short Circuit Results

Substation	Base Voltage (kV)	Pre-fault Voltage (p.u.)	3-phase		Single-phase-to-ground	
			Positive Sequence Impedance (p.u.) [1]	Current (kA)	Zero Sequence Impedance (p.u.) [1]	Current (kA)
Dover 888S	240	1.096	0.005669+j0.028023	9.2	0.006181+j0.038652	8.3
Joslyn 849S	240	1.088	0.006536+j0.032639	7.9	0.012307+j0.073725	5.6
Livock 939S	240	1.088	0.035307+j0.113324	2.2	0.018562+j0.150465	2.0
Brintnell 876S	240	1.093	0.029906+j0.092261	2.7	0.002546+j0.057030	3.2
Wesley Creek 834S	240	1.109	0.022549+j0.072205	3.5	0.002179+j0.042958	4.1

RuthLake 848S	240	1.086	0.003763+j0.020985	12.3	0.001376+j0.015630	13.6
Kinosis 856S	240	1.050	0.009711+j0.041535	5.9	0.017345+j0.084625	4.4
McMillan 885S	240	1.088	0.014864+j0.067089	3.8	0.009569+j0.085826	3.5
Salt Creek 977S	240	1.061	0.008332+j0.035551	7.0	0.008563+j0.051031	6.2

Note: 1) per unit (p.u.) quantities are on 100MVA base.

Table I-3: 2013 System Maximum Short Circuit Results with MRCP and Dover West connection

Substation	Base Voltage (kV)	Pre-fault Voltage (p.u.)	3-phase		Single-phase-to-ground	
			Positive Sequence Impedance (p.u.) [1]	Current (kA)	Zero Sequence Impedance (p.u.) [1]	Current (kA)
Dover 888S	240	1.106	0.004297+j0.022086	11.8	0.004399+j0.030868	10.6
Joslyn 849S	240	1.093	0.005948+j0.030638	8.4	0.010658+j0.069006	6.0
Livock 939S	240	1.105	0.012988+j0.056127	4.6	0.046104+j0.285754	2.0
Brintnell 876S	240	1.104	0.014226+j0.055844	4.6	0.002548+j0.057050	4.6
Wesley Creek 834S	240	1.115	0.018161+j0.065096	4.0	0.002180+j0.042958	4.5
RuthLake 848S	240	1.092	0.003154+j0.018285	14.1	0.001372+j0.015016	15.3
Kinosis 856S	240	1.055	0.009263+j0.040470	6.1	0.017262+j0.084291	4.5
McMillan 885S	240	1.102	0.014142+j0.064905	4.0	0.009588+j0.085345	3.6
Salt Creek 977S	240	1.067	0.007677+j0.033651	7.4	0.008565+j0.050813	6.4
Ellsr River	240	1.096	0.007727+j0.043836	5.9	0.022710+j0.121004	3.7
Mackay MRCP (937S)	240	1.107	0.008855+j0.041669	6.3	0.009861+j0.083358	4.7
ADW01 147S (Dover West)	240	1.093	0.009066+j0.050055	5.2	0.028559+j0.143625	3.2
Birchwood 960S	240	1.107	0.008754+j0.041570	6.2	0.009761+j0.083258	4.8

Note: 1) per unit (p.u.) quantities are on 100MVA base.

Table I-4: 2013 System Minimum Short Circuit Results with MRCP and Dover West connection

Substation	Base Voltage (kV)	Pre-fault Voltage (p.u.)	3-phase		Single-phase-to-ground	
			Positive Sequence Impedance (p.u.) [1]	Current (kA)	Zero Sequence Impedance (p.u.) [1]	Current (kA)
Dover 888S	240	1.070	0.006086+j0.027827	9.0	0.006155+j0.038565	8.1
Joslyn 849S	240	1.062	0.007586+j0.034729	7.2	0.011423+j0.073549	5.3
Livock 939S	240	1.086	0.035315+j0.113231	2.2	0.018564+j0.150485	2.0
Brintnell 876S	240	1.09	0.029911+j0.092175	2.7	0.002548+j0.057050	3.2
Wesley Creek 834S	240	1.106	0.022550+j0.072159	3.5	0.002179+j0.042958	4.1
RuthLake 848S	240	1.062	0.003935+j0.020637	12.2	0.001345+j0.015416	13.5
Kinosis 856S	240	1.016	0.009614+j0.040445	5.9	0.016713+j0.082620	4.4
McMillan 885S	240	1.050	0.014980+j0.066453	3.7	0.009580+j0.085373	3.4
Salt Creek 977S	240	1.032	0.008440+j0.034956	6.9	0.008524+j0.050785	6.1
Ellsr River	240	1.062	0.009597+j0.048560	5.2	0.023948+j0.127055	3.4
Mackay MRCP (937S)	240	1.070	0.012094+j0.057436	4.4	0.009894+j0.084920	3.8
ADW01 147S (Dover West)	240	1.059	0.010983+j0.054721	4.6	0.029798+j0.149677	2.9
Birchwood 960S	240	1.070	0.011993+j0.057337	4.4	0.009793+j0.084820	3.8

Note: 1) per unit (p.u.) quantities are on 100MVA base.

Table I-5: 2015 System Maximum Short Circuit Results with MRCP and Dover West connection

Substation	Base Voltage (kV)	Pre-fault Voltage (p.u.)	3-phase		Single-phase-to-ground	
			Positive Sequence Impedance (p.u.) [1]	Current (kA)	Zero Sequence Impedance (p.u.) [1]	Current (kA)
Dover 888S	240	1.068	0.004297+j0.022086	13.5	0.004399+j0.030868	12.6
Joslyn 849S	240	1.062	0.005948+j0.030638	9.8	0.010658+j0.069006	7.0
Livock 939S	240	1.060	0.012988+j0.056127	5.5	0.046104+j0.285754	2.9
Brintnell 876S	240	1.037	0.014226+j0.055844	4.2	0.002548+j0.057050	4.2
Wesley Creek 834S	240	1.107	0.018161+j0.065096	4.2	0.002180+j0.042958	4.6
RuthLake 848S	240	1.065	0.003154+j0.018285	16.6	0.001372+j0.015016	18.6
Kinosis 856S	240	1.031	0.009263+j0.040470	8.9	0.017262+j0.084291	6.3
McMillan 885S	240	1.059	0.014142+j0.064905	4.6	0.009588+j0.085345	4.1
Salt Creek 977S	240	1.044	0.007677+j0.033651	8.3	0.008565+j0.050813	7.1
Ellsr River	240	1.046	0.007727+j0.043836	7.7	0.022710+j0.121004	6.5
Mackay MRCP (937S)	240	1.055	0.008855+j0.041669	8.2	0.009861+j0.083358	6.2
ADW01 147S (Dover West)	240	1.043	0.009066+j0.050055	6.4	0.028559+j0.143625	4.9
ADR4 144S (Dover North)	240	1.042	0.008754+j0.041570	7.0	0.009761+j0.083258	6.1
ADR3 141S (Dover South)	240	1.038	0.007677+j0.033651	5.4	0.008565+j0.050813	4.6
Birchwood 960S	240	1.055	0.007727+j0.043836	8.2	0.022710+j0.121004	4.4

Note: 1) per unit (p.u.) quantities are on 100MVA base.

Table I-6: 2015 System Minimum Short Circuit Results with MRCP and Dover West connection

Substation	Base Voltage (kV)	Pre-fault Voltage (p.u.)	3-phase		Single-phase-to-ground	
			Positive Sequence Impedance (p.u.) [1]	Current (kA)	Zero Sequence Impedance (p.u.) [1]	Current (kA)
Dover 888S	240	1.068	0.006120+j0.023307	10.7	0.005102+j0.028577	10.0
Joslyn 849S	240	1.069	0.007357+j0.029390	8.5	0.009612+j0.059763	6.4
Livock 939S	240	1.110	0.032062+j0.108453	2.3	0.231099+j0.775264	0.8
Brintnell 876S	240	1.091	0.031453+j0.096973	2.6	0.001652+j0.062042	3.0
Wesley Creek 834S	240	1.129	0.022974+j0.071852	3.6	0.002158+j0.050175	4.1
RuthLake 848S	240	1.067	0.003592+j0.017175	14.6	0.001071+j0.010993	16.8
Kinosis 856S	240	1.043	0.006366+j0.029231	8.4	0.014292+j0.061475	6.1
McMillan 885S	240	1.061	0.012671+j0.054869	4.5	0.009467+j0.076508	4.1
Salt Creek 977S	240	1.056	0.007374+j0.031594	7.8	0.008210+j0.046183	6.8
Ellsr River	240	1.053	0.009804+j0.037566	6.5	0.007386+j0.053439	5.8
Mackay MRCP (937S)	240	1.057	0.010257+j0.040251	6.1	0.009382+j0.066943	5.1
ADW01 147S (Dover West)	240	1.051	0.011068+j0.043826	5.6	0.013222+j0.076035	4.5
ADR4 144S (Dover North)	240	1.050	0.010583+j0.040418	6.0	0.006872+j0.054647	5.5
ADR3 141S (Dover South)	240	1.046	0.012813+j0.050951	4.8	0.009442+j0.071980	4.3
Birchwood 960S	240	1.057	0.010157+j0.040156	6.1	0.008744+j0.064434	5.2

Note: 1) per unit (p.u.) quantities are on 100MVA base.

Table I-7: 2020 System Maximum Short Circuit Results with MRCP and Dover West connection

Substation	Base Voltage (kV)	Pre-fault Voltage (p.u.)	3-phase		Single-phase-to-ground	
			Positive Sequence Impedance (p.u.) [1]	Current (kA)	Zero Sequence Impedance (p.u.) [1]	Current (kA)
Dover 888S	240	1.060	0.002328+j0.012307	20.4	0.003546+j0.020070	16.9
Joslyn 849S	240	1.051	0.003208+j0.017094	14.6	0.001374+j0.016448	14.9
Livock 939S	240	1.077	0.009145+j0.039771	6.4	0.031934+j0.166507	3.1
Brintnell 876S	240	1.073	0.011984+j0.047417	5.3	0.002677+j0.056469	5.0
Wesley Creek 834S	240	1.104	0.012701+j0.049027	5.2	0.002798+j0.043362	5.5
RuthLake 848S	240	1.049	0.001557+j0.010014	24.9	0.000966+j0.009094	25.9
Kinosis 856S	240	1.016	0.004889+j0.023131	10.4	0.005006+j0.034392	9.0
McMillan 885S	240	1.065	0.011210+j0.050205	5.0	0.009267+j0.075569	4.3
Salt Creek 977S	240	1.014	0.005848+j0.024769	9.6	0.007702+j0.042793	7.8
Ellsr River	240	1.054	0.004223+j0.023640	10.6	0.007086+j0.047318	8.0
Mackay MRCP (937S)	240	1.062	0.004785+j0.023489	10.7	0.009144+j0.059531	7.1
ADW01 147S (Dover West)	240	1.052	0.005447+j0.029968	8.3	0.012921+j0.069912	5.8
ADR4 144S (Dover North)	240	1.054	0.004681+j0.025971	9.6	0.006966+j0.050182	7.4
ADR3 141S (Dover South)	240	1.054	0.006277+j0.035276	7.1	0.010109+j0.070054	5.4
Birchwood 960S	240	1.062	0.004685+j0.023392	10.7	0.008506+j0.057022	7.3

Note: 1) per unit (p.u.) quantities are on 100MVA base.

Table I-8: 2020 System Minimum Short Circuit Results with MRCP and Dover West connection

Substation	Base Voltage (kV)	Pre-fault Voltage (p.u.)	3-phase		Single-phase-to-ground	
			Positive Sequence Impedance (p.u.) [1]	Current (kA)	Zero Sequence Impedance (p.u.) [1]	Current (kA)
Dover 888S	240	1.046	0.003514+j0.015239	16.1	0.004488+j0.023764	13.7
Joslyn 849S	240	1.040	0.003933+j0.018432	13.3	0.001374+j0.016623	14.0
Livock 939S	240	1.053	0.009705+j0.040578	6.1	0.032144+j0.167400	3.0
Brintnell 876S	240	1.040	0.012481+j0.047702	5.1	0.002683+j0.056528	4.9
Wesley Creek 834S	240	1.082	0.013174+j0.049369	5.1	0.002798+j0.043374	3.4
RuthLake 848S	240	1.037	0.002198+j0.011832	20.7	0.000947+j0.009258	22.6
Kinosis 856S	240	0.990	0.005375+j0.023845	9.7	0.005000+j0.034426	8.6
McMillan 885S	240	1.026	0.012004+j0.051452	4.7	0.009242+j0.075546	4.0
Salt Creek 977S	240	0.994	0.006533+j0.025818	9.0	0.007707+j0.042855	7.4
Ellsr River	240	1.040	0.005070+j0.025217	9.7	0.007084+j0.047601	7.6
Mackay MRCP (937S)	240	1.045	0.005620+j0.025239	9.7	0.009387+j0.060787	6.7
ADW01 147S (Dover West)	240	1.037	0.006307+j0.031525	7.8	0.012919+j0.070196	5.5
ADR4 144S (Dover North)	240	1.040	0.005504+j0.027475	8.9	0.006903+j0.050232	7.0
ADR3 141S (Dover South)	240	1.040	0.007055+j0.036653	6.7	0.009937+j0.069691	5.2
Birchwood 960S	240	1.045	0.005519+j0.025143	9.8	0.008748+j0.058278	6.8

Note: 1) per unit (p.u.) quantities are on 100MVA base.

Disclaimer

Short circuit current calculation is based on modeling information provided to the AESO by third parties. Short circuit estimation is subject to change. The information provided in this study is not intended to be used as the sole source of

information for electrical equipment specification and the design of public or worker safety-grounding systems.

ATTACHMENT J
Dynamic Stability Analysis

Category B Fault Analysis Results

Category B fault analysis was performed for the proposed NW FMM development. Category B faults are defined as three-phase faults of a transmission line or transformer with normal clearing time. Table J-1 summarizes the fault descriptions and results for the Category B fault analysis. Specific transient simulation plots for Category B contingencies can be found in Appendix J.

TABLE J-1

STABILITY RESULTS FOR CATEGORY B FAULTS

Case ID	Description	Observations
B01	3ph fault at Brintnell 876S on 9L56 240kV line Wabasca 720S to Brintnell 876S 5 cycles: trip Brintnell CB on 9L56 7 cycles: trip Wabasca CB on 9L56	System stable Good voltage recovery
B02	3ph fault at Wabasca 720S on 9L56 240kV line Wabasca 720S to Brintnell 876S 5 cycles: trip Wabasca CB on 9L56 7 cycles: trip Brintnell CB on 9L56	System stable Good voltage recovery
B03	3ph fault at Livock 939S on 9L10 240kV line Brintnell 876S to Livock 939S 5 cycles: trip Livock CB on 9L10 7 cycles: trip Brintnell CB on 9L10	System stable Good voltage recovery
B04	3ph fault at Brintnell 876S on 9L10 240kV line Brintnell 876S to Livock 939S 5 cycles: trip Brintnell CB on 9L10 7 cycles: trip Livock CB on 9L10	System stable Good voltage recovery
B05	3ph fault at Livock 939S on 9L15 240kV line Wesley Creek 834S to Livock 939S 5 cycles: trip Livock CB on 9L15 7 cycles: trip Wesley Creek CB on 9L15	System stable Good voltage recovery
B06	3ph fault at Wesley Creek 834S on 9L15 240kV line Wesley Creek 834S to Livock 939S 5 cycles: trip Wesley Creek CB on 9L15 7 cycles: trip Livock CB on 9L15	System stable Good voltage recovery
B07	3ph fault at Birchwood Creek 960S on 9L57 240kV line Livock 939S to Birchwood Creek 960S 5 cycles: trip Birchwood Creek CB on 9L57 7 cycles: trip Livock 939S CB on 9L57	System stable Good voltage recovery
B08	3ph fault at Livock 939S on 9L57 240kV line Livock 939S to Birchwood Creek 960S 5 cycles: trip Livock 939S CB on 9L57 7 cycles: trip Birchwood Creek CB on 9L57	System stable Good voltage recovery
B09	3ph fault at Birchwood Creek 960S on 9L95 240kV line Ells River 2079S to Birchwood Creek 960S 5 cycles: trip Birchwood Creek CB on 9L95 7 cycles: trip Ells River CB on 9L95	System stable Good voltage recovery
B10	3ph fault at Ells River 2079S on 9L95 240kV line Ells River 2079S to Birchwood Creek 960S 5 cycles: trip Ells River CB on 9L95 7 cycles: trip Birchwood Creek CB on 9L95	System stable Good voltage recovery
B11	3ph fault at Birchwood Creek 960S on 9L74 240kV line Dover 888S to Birchwood Creek 960S 5 cycles: trip Birchwood Creek CB on 9L74 7 cycles: trip Dover CB on 9L74	System stable Good voltage recovery
B12	3ph fault at Dover 888S on 9L74 240kV line Dover 888S to Birchwood Creek 960S 5 cycles: trip Dover CB on 9L74 7 cycles: trip Birchwood Creek CB on 9L74	System stable Good voltage recovery
B13	3ph fault at Dover 888S on 9L08 240kV line Dover 888S to Ells River 2079S	System stable Good voltage recovery

	5 cycles: trip Dover CB on 9L08 7 cycles: trip Ells River CB on 9L08	
B14	3ph fault at Ells River 2079S on 9L08 240kV line Dover 888S to Ells River 2079S 5 cycles: trip Ells River CB on 9L08 7 cycles: trip Dover CB on 9L08	System stable Good voltage recovery
B15	3ph fault at Dover 888S on 9L09 240kV line Dover 888S to Josyn 849S 5 cycles: trip Dover CB on 9L09 7 cycles: trip Josyn CB on 9L09	System stable Good voltage recovery
B16	3ph fault at Josyn 849S on 9L09 240kV line Dover 888S to Josyn 849S 5 cycles: trip Josyn CB on 9L09 7 cycles: trip Dover CB on 9L09	System stable Good voltage recovery
B17	3ph fault at Ells River 2079S on 9L76 240kV line Josyn 849S to Ells River 2079S 5 cycles: trip Ells River CB on 9L08 7 cycles: trip Josyn CB on 9L08	System stable Good voltage recovery
B18	3ph fault at Josyn 849S on 9L76 240kV line Josyn 849S to Ells River 2079S 5 cycles: trip Josyn CB on 9L08 7 cycles: trip Ells River CB on 9L08	System stable Good voltage recovery
B19	3ph fault at Dover 888S on 9L30 240kV line Dover 888S to Thickwood 951S 5 cycles: trip Dover CB on 9L30 7 cycles: trip Thickwood CB on 9L30	System stable Good voltage recovery
B20	3ph fault at Thickwood 951S on 9L30 240kV line Dover 888S to Thickwood 951S 5 cycles: trip Thickwood CB on 9L30 7 cycles: trip Dover CB on 9L30	System stable Good voltage recovery
B21	3ph fault at Dover 888S on 9L01 240kV line Dover 888S to Ruth lake 848S 5 cycles: trip Dover CB on 9L01 7 cycles: trip Ruth lake CB on 9L01	System stable Good voltage recovery
B22	3ph fault at Ruth lake 848S on 9L01 240kV line Dover 888S to Ruth lake 848S 5 cycles: trip Ruth lake CB on 9L01 7 cycles: trip Dover CB on 9L01	System stable Good voltage recovery
B23	3ph fault at Ruth lake 848S on 9L990 240kV line SaltCreek 977S to Ruth lake 848S 5 cycles: trip Ruth lake CB on 9L990 8 cycles: trip SaltCreek CB on 9L990	System stable Good voltage recovery
B24	3ph fault at SaltCreek 977S on 9L990 240kV line SaltCreek 977S to Ruth lake 848S 5 cycles: trip SaltCreek CB on 9L990 8 cycles: trip Ruth lake CB on 9L990	System stable Good voltage recovery
B25	3ph fault at Thickwood 951S on 9L07 240kV line McMillan 885S to Thickwood 951S 5 cycles: trip Thickwood CB on 9L07 7 cycles: trip McMillan CB on 9L07	System stable Good voltage recovery
B26	3ph fault at McMillan 885S on 9L07 240kV line McMillan 885S to Thickwood 951S 5 cycles: trip McMillan CB on 9L07 7 cycles: trip Thickwood CB on 9L07	System stable Good voltage recovery
B27	3ph fault at Thickwood 951S on 500kV line	System stable

	Genessee to Thickwood 951S 4 cycles: trip Thickwood CB 7 cycles: trip Genessee CB	Good voltage recovery
B28	3ph fault at Genessee on 500kV line Genessee to Thickwood 951S 4 cycles: trip Genessee CB 7 cycles: trip Thickwood CB	System stable Good voltage recovery

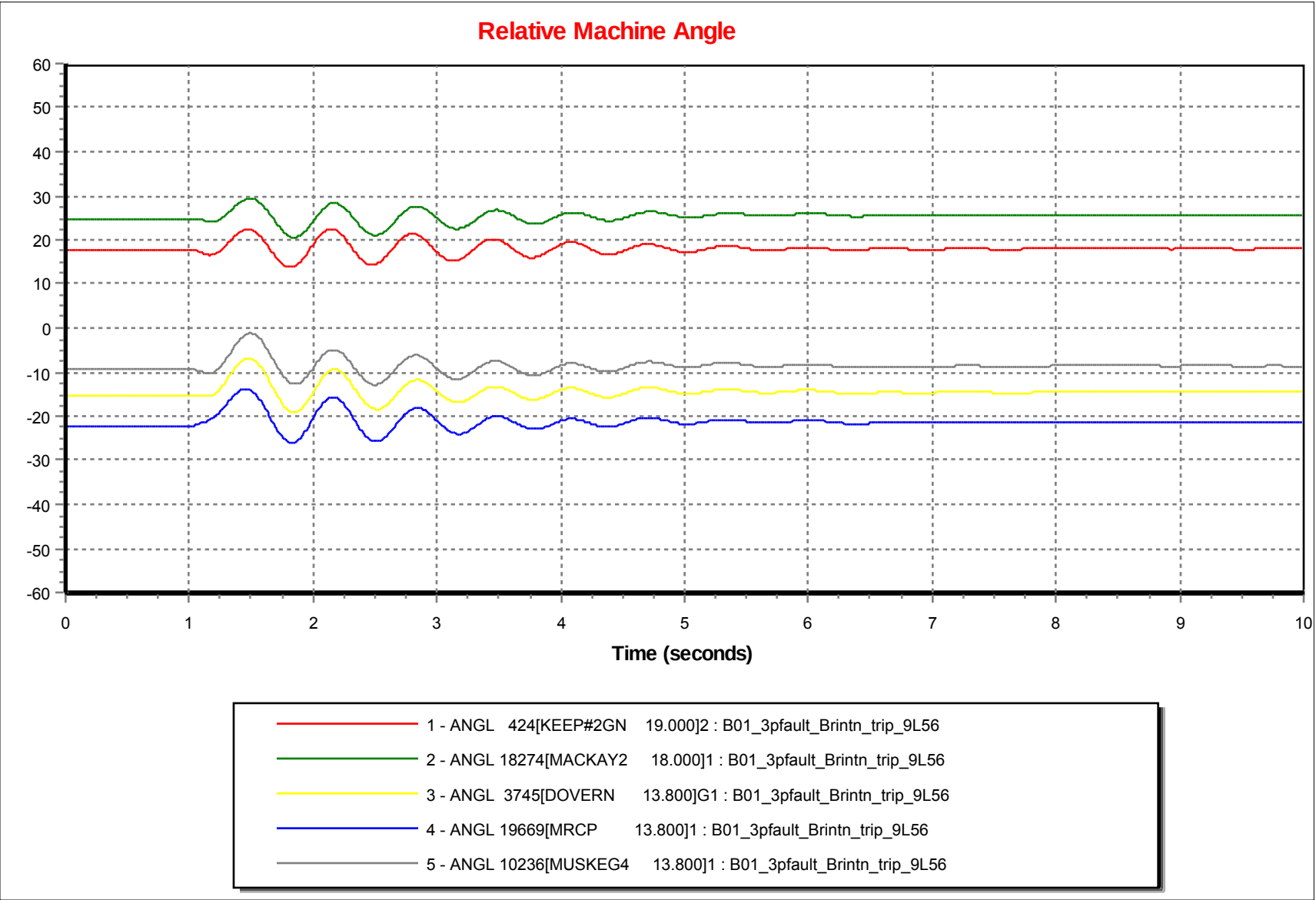
Relative Machine Angle
60
50
40
30
20
10
0
-10
-20
-30
-40
-50
-60
0
1
2
3
4
5
6
7
8
9
10
Time (seconds)
1 - ANGL 424[KEEP#2GN 19.000]2 : B01_3pfault_Brintn_trip_9L56
2 - ANGL 18274[MACKAY2 18.000]1 : B01_3pfault_Brintn_trip_9L56
3 - ANGL 3745[DOVERN 13.800]G1 : B01_3pfault_Brintn_trip_9L56
4 - ANGL 19669[MRCP 13.800]1 : B01_3pfault_Brintn_trip_9L56
5 - ANGL 10236[MUSKEG4 13.800]1 : B01_3pfault_Brintn_trip_9L56

Machine Power

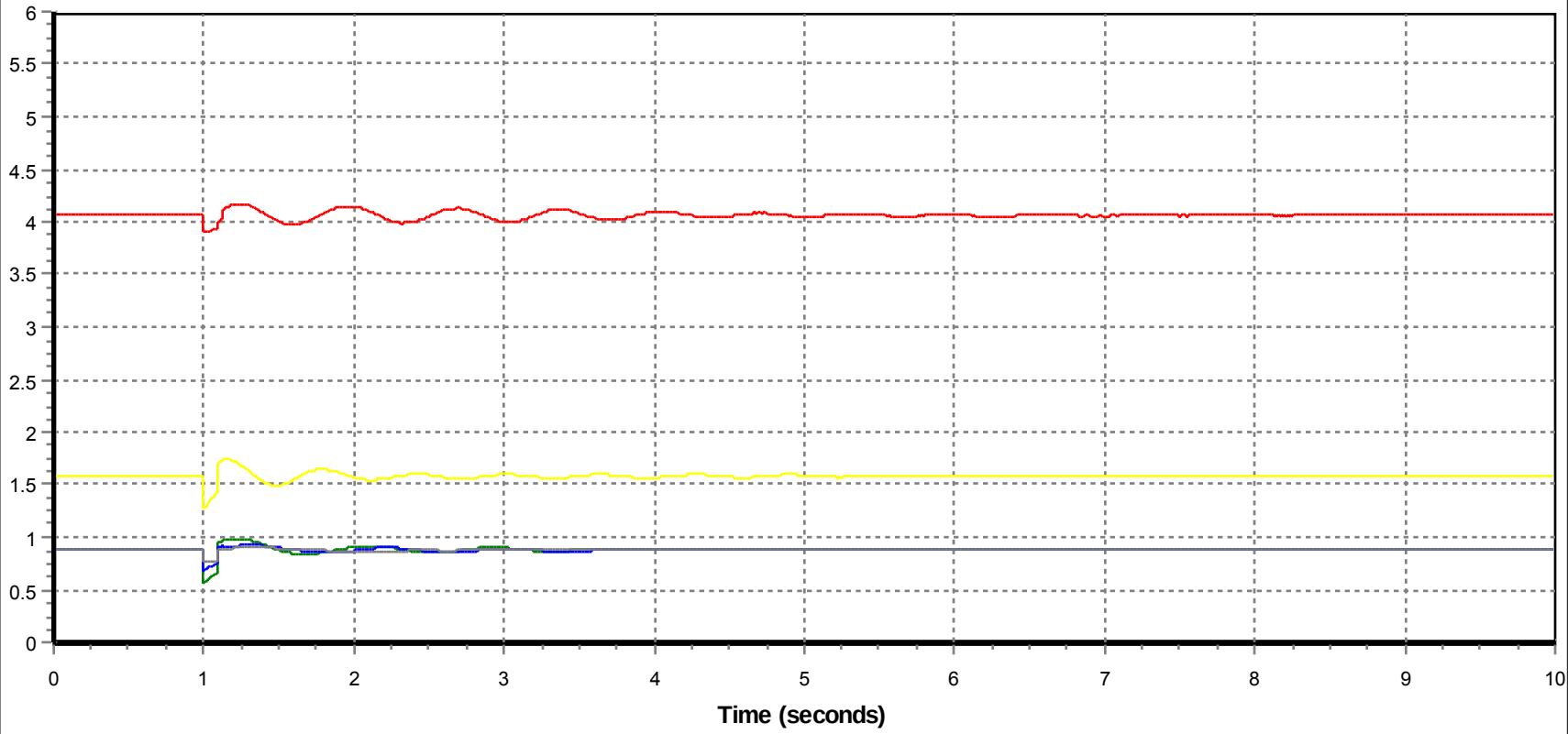

6 - POWR 424[KEEP#2GN 19.000]2 : B01_3pfault_Brintn_trip_9L56

9 - POWR 19669[MRCP 13.800]1 : B01_3pfault_Brintn_trip_9L56

7 - POWR 18274[MACKAY2 18.000]1 : B01_3pfault_Brintn_trip_9L56

8 - POWR 3745[DOVERN 13.800]G1 : B01_3pfault_Brintn_trip_9L56

10 - POWR 10236[MUSKEG4 13.800]1 : B01_3pfault_Brintn_trip_9L56

Frequence Deviation

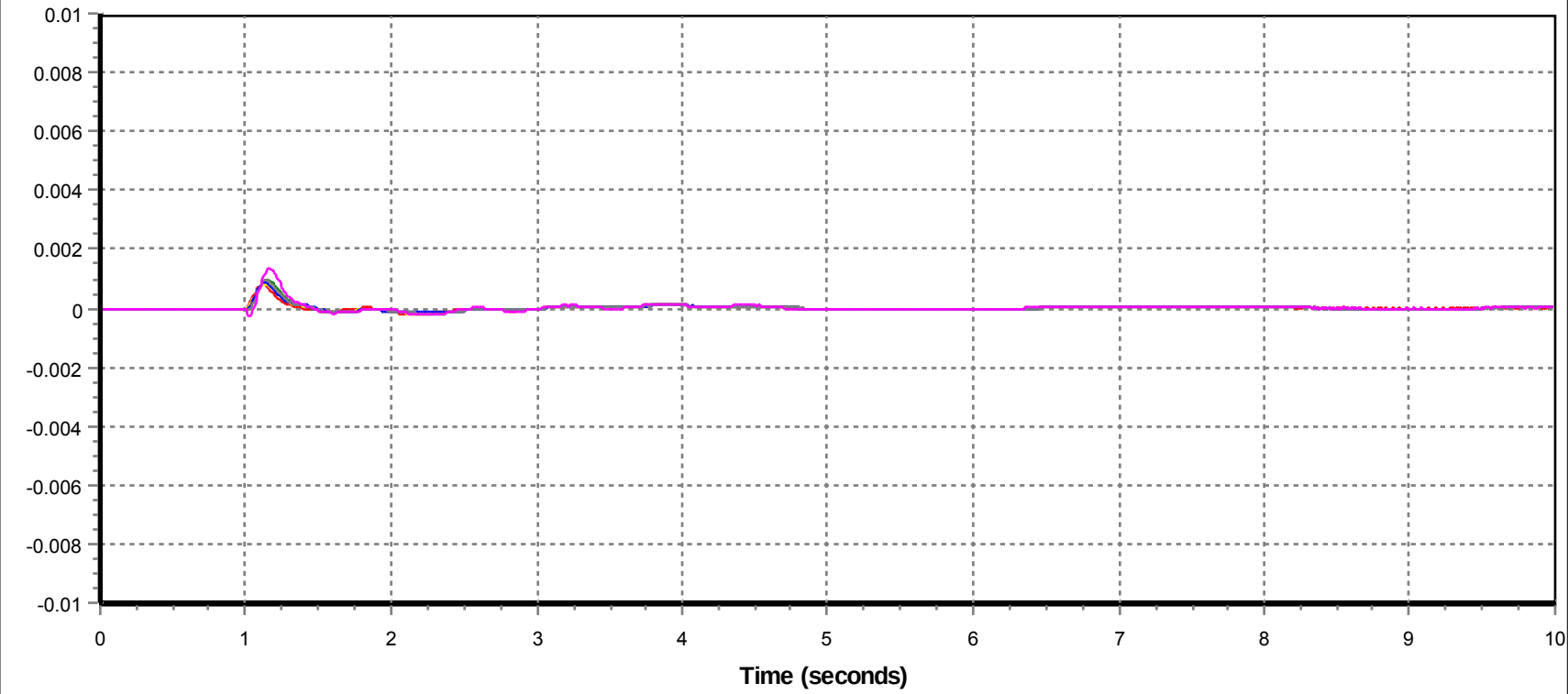

11 - FREQ 1601 [THICKWD1 500.00] : B01_3pfault_Brintn_trip_9L56

12 - FREQ 1670 [BIRCHWOOD 240.00] : B01_3pfault_Brintn_trip_9L56

13 - FREQ 666 [DOVER 240.00] : B01_3pfault_Brintn_trip_9L56

14 - FREQ 1263 [JOSLYN4 240.00] : B01_3pfault_Brintn_trip_9L56

15 - FREQ 98503 [ELLSR 240.00] : B01_3pfault_Brintn_trip_9L56

16 - FREQ 1288 [LIVOCK01 240.00] : B01_3pfault_Brintn_trip_9L56

Voltage

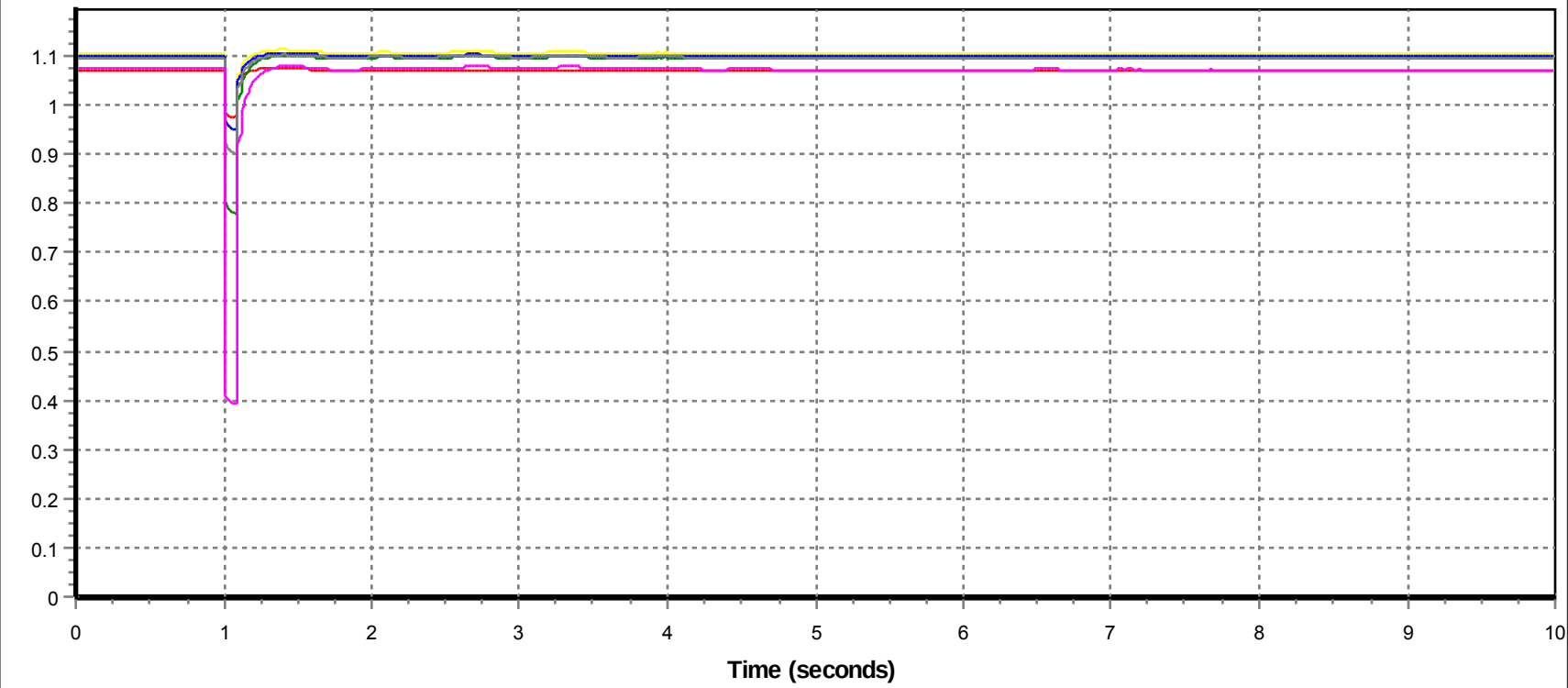

17 - VOLT 1601 [THICKWD1 500.00] : B01_3pfault_Brintn_trip_9L56

18 - VOLT 1670 [BIRCHWOOD 240.00] : B01_3pfault_Brintn_trip_9L56

19 - VOLT 666 [DOVER 240.00] : B01_3pfault_Brintn_trip_9L56

20 - VOLT 1263 [JOSLYN4 240.00] : B01_3pfault_Brintn_trip_9L56

21 - VOLT 98503 [ELLSR 240.00] : B01_3pfault_Brintn_trip_9L56

22 - VOLT 1288 [LIVOCK01 240.00] : B01_3pfault_Brintn_trip_9L56

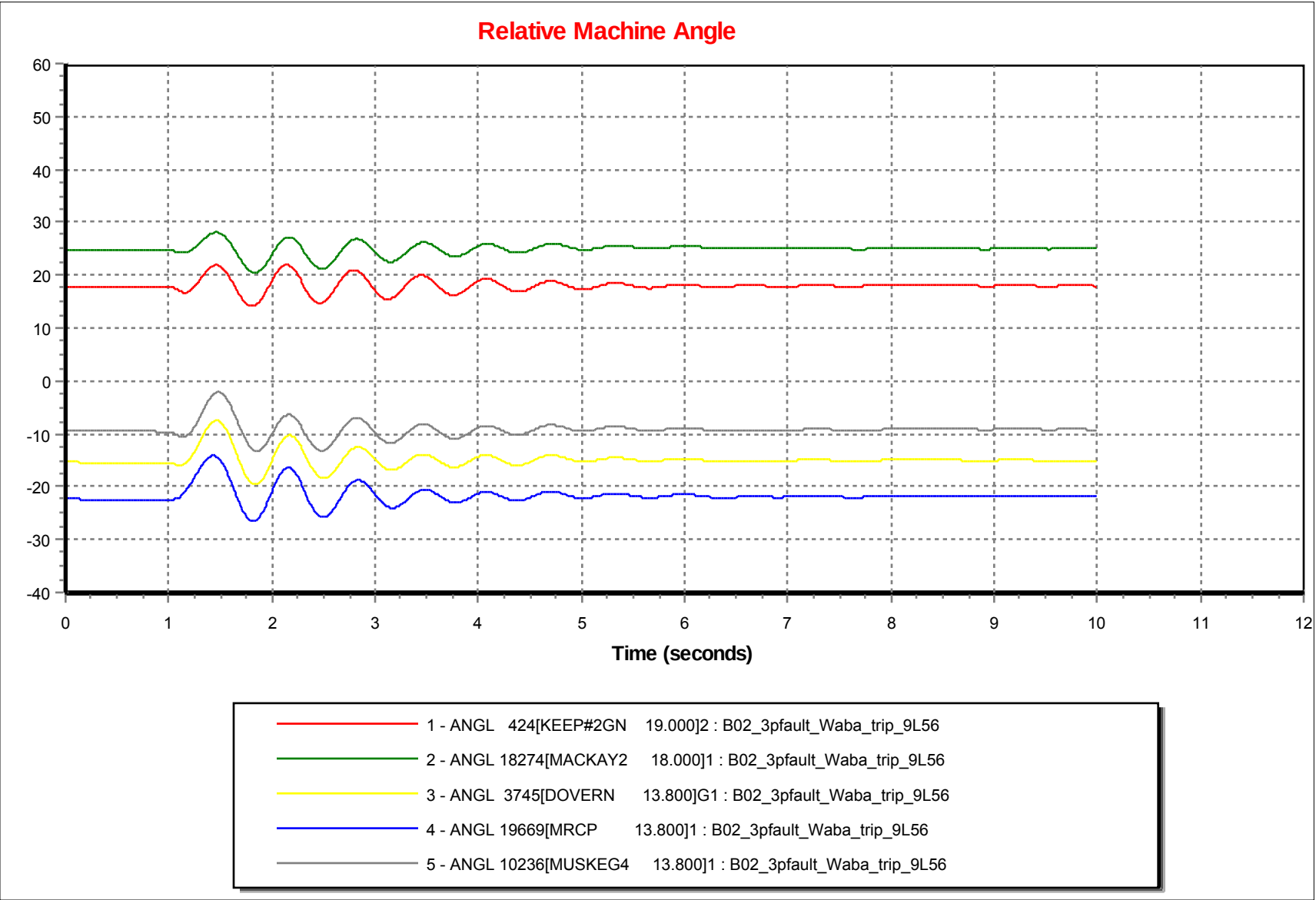
Relative Machine Angle
60
50
40
30
20
10
0
-10
-20
-30
-40
0
1
2
3
4
5
6
7
8
9
10
11
12
Time (seconds)
1 - ANGL 424[KEEP#2GN 19.000]2 : B02_3pfault_Waba_trip_9L56
2 - ANGL 18274[MACKAY2 18.000]1 : B02_3pfault_Waba_trip_9L56
3 - ANGL 3745[DOVERN 13.800]G1 : B02_3pfault_Waba_trip_9L56
4 - ANGL 19669[MRCP 13.800]1 : B02_3pfault_Waba_trip_9L56
5 - ANGL 10236[MUSKEG4 13.800]1 : B02_3pfault_Waba_trip_9L56

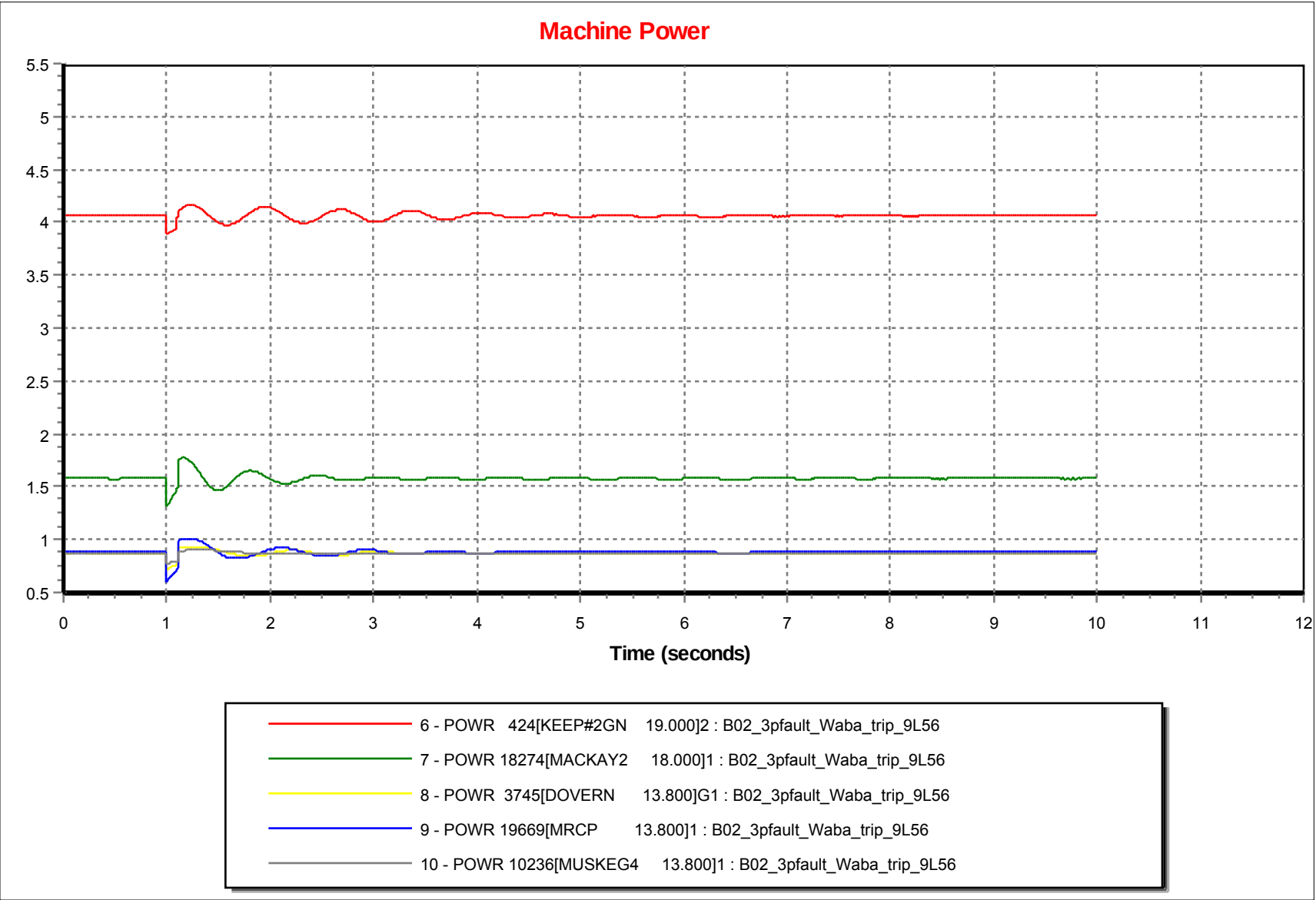
Machine Power
5.5
5
4.5
4
3.5
3
2.5
2
1.5
1
0.5
0
1
2
3
4
5
6
7
8
9
10
11
12
Time (seconds)
6 - POWR 424[KEEP#2GN 19.000]2 : B02_3pfault_Waba_trip_9L56
7 - POWR 18274[MACKAY2 18.000]1 : B02_3pfault_Waba_trip_9L56
8 - POWR 3745[DOVERN 13.800]G1 : B02_3pfault_Waba_trip_9L56
9 - POWR 19669[MRCP 13.800]1 : B02_3pfault_Waba_trip_9L56
10 - POWR 10236[MUSKEG4 13.800]1 : B02_3pfault_Waba_trip_9L56

Frequence Deviation

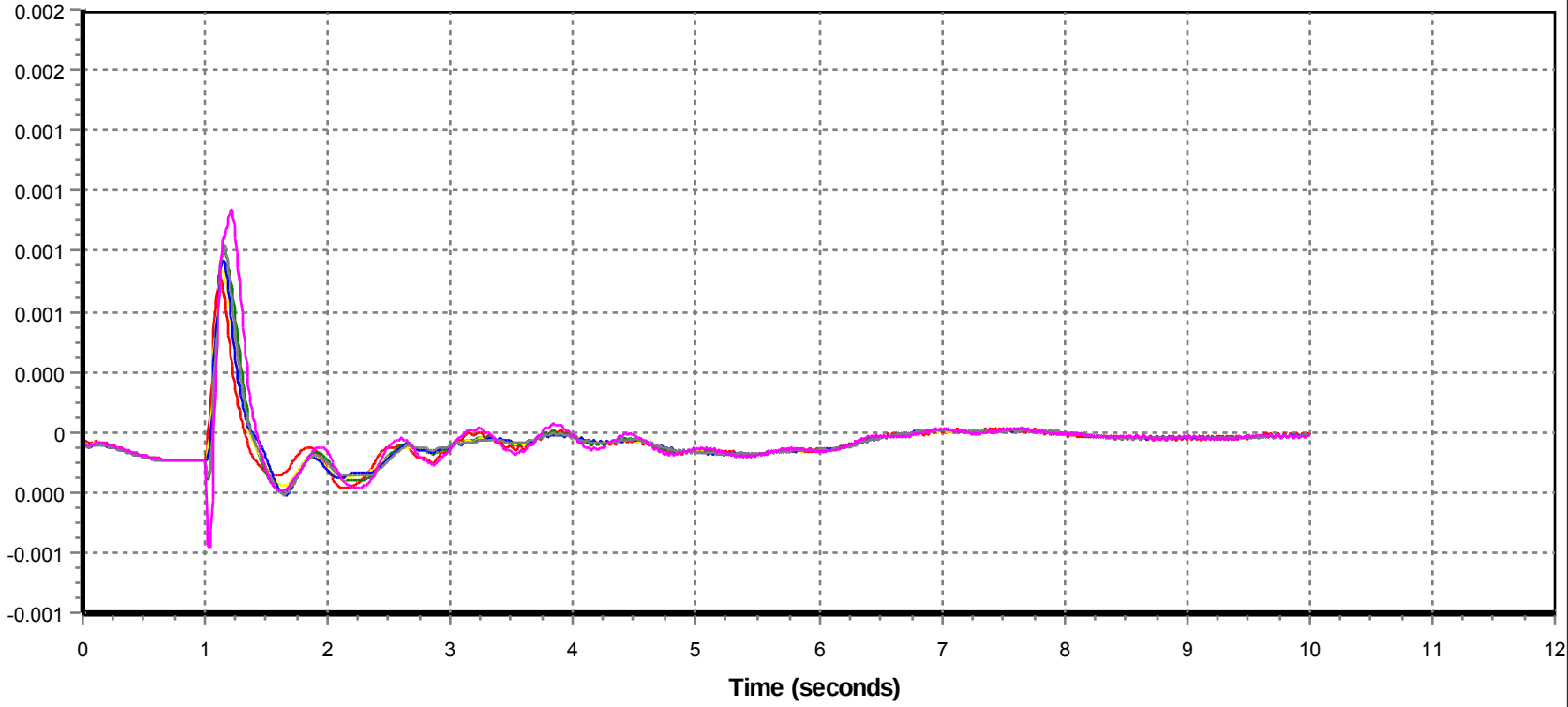

11 - FREQ 1601 [THICKWD1 500.00] : B02_3pfault_Waba_trip_9L56

12 - FREQ 1670 [BIRCHWOOD 240.00] : B02_3pfault_Waba_trip_9L56

13 - FREQ 666 [DOVER 240.00] : B02_3pfault_Waba_trip_9L56

14 - FREQ 1263 [JOSLYN4 240.00] : B02_3pfault_Waba_trip_9L56

15 - FREQ 98503 [ELLSR 240.00] : B02_3pfault_Waba_trip_9L56

16 - FREQ 1288 [LIVOCK01 240.00] : B02_3pfault_Waba_trip_9L56

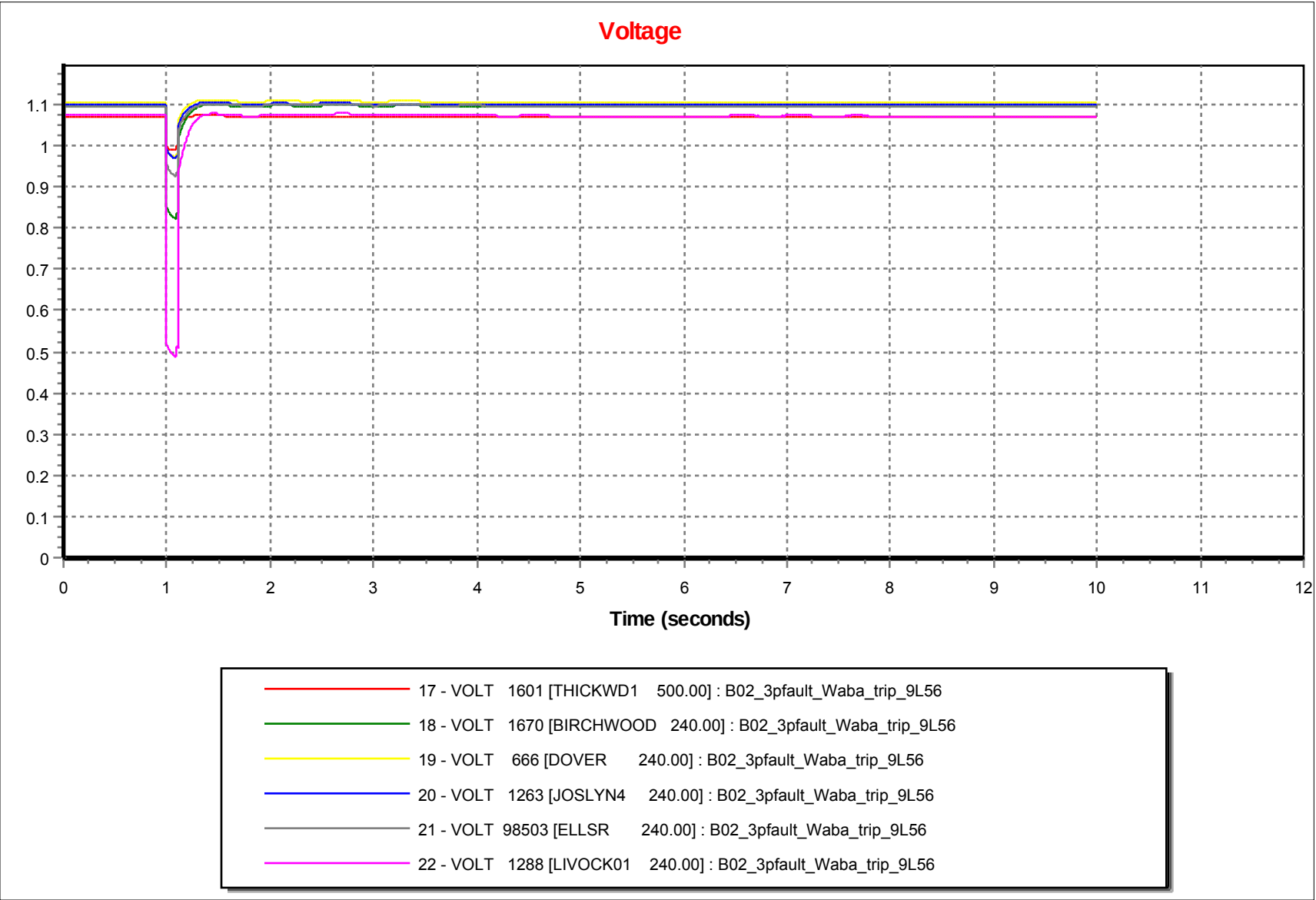
Voltage
1.1
1
0.9
0.8
0.7
0.6
0.5
0.4
0.3
0.2
0.1
0
0
1
2
3
4
5
6
7
8
9
10
11
12
Time (seconds)
17 - VOLT 1601 [THICKWD1 500.00] : B02_3pfault_Waba_trip_9L56
18 - VOLT 1670 [BIRCHWOOD 240.00] : B02_3pfault_Waba_trip_9L56
19 - VOLT 666 [DOVER 240.00] : B02_3pfault_Waba_trip_9L56
20 - VOLT 1263 [JOSLYN4 240.00] : B02_3pfault_Waba_trip_9L56
21 - VOLT 98503 [ELLSR 240.00] : B02_3pfault_Waba_trip_9L56
22 - VOLT 1288 [LIVOCK01 240.00] : B02_3pfault_Waba_trip_9L56

Relative Machine Angle

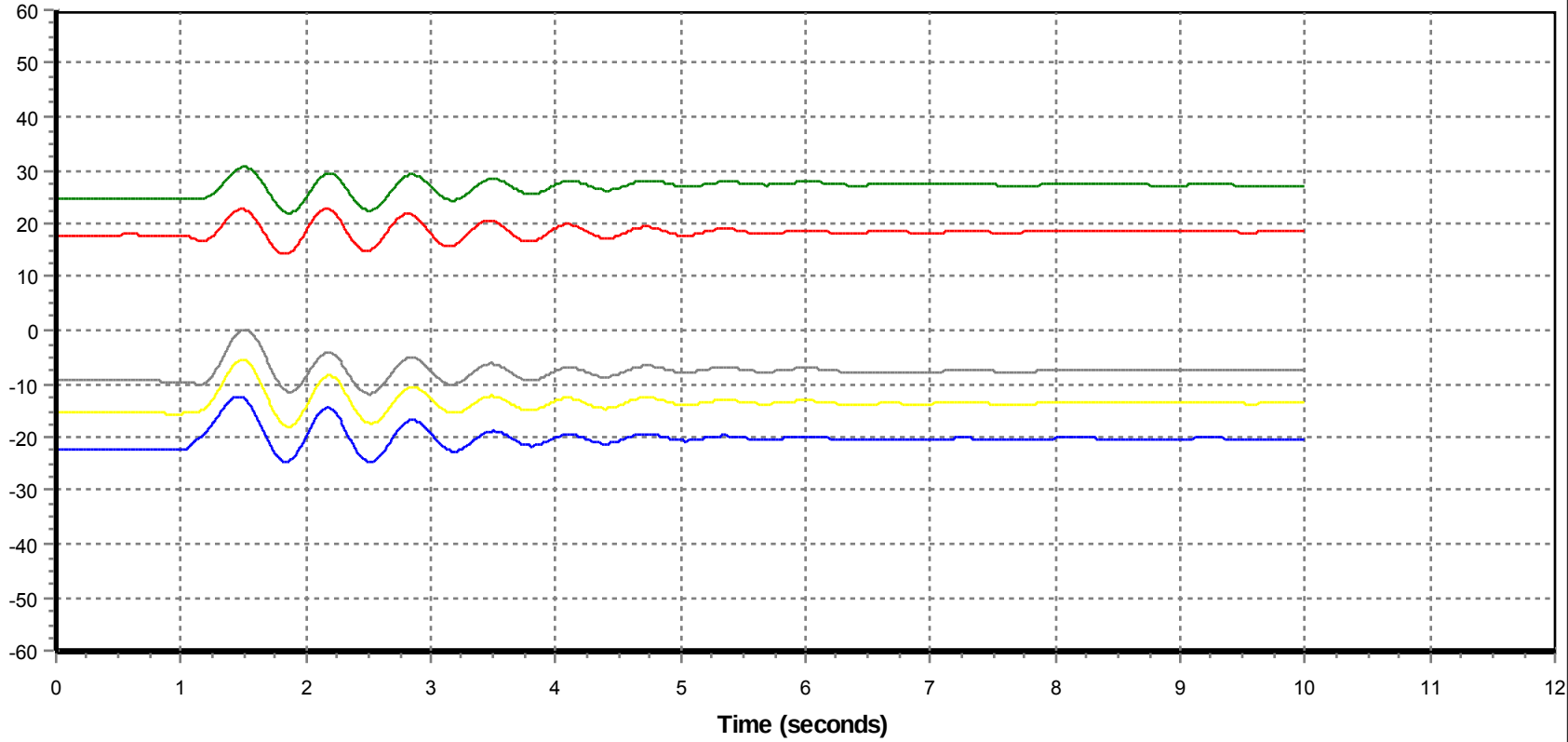

1 - ANGL 424[KEEP#2GN 19.000]2 : B03_3pfault_Livock_trip_9L10

2 - ANGL 18274[MACKAY2 18.000]1 : B03_3pfault_Livock_trip_9L10

3 - ANGL 3745[DOVERN 13.800]G1 : B03_3pfault_Livock_trip_9L10

4 - ANGL 19669[MRCP 13.800]1 : B03_3pfault_Livock_trip_9L10

5 - ANGL 10236[MUSKEG4 13.800]1 : B03_3pfault_Livock_trip_9L10

Machine Power

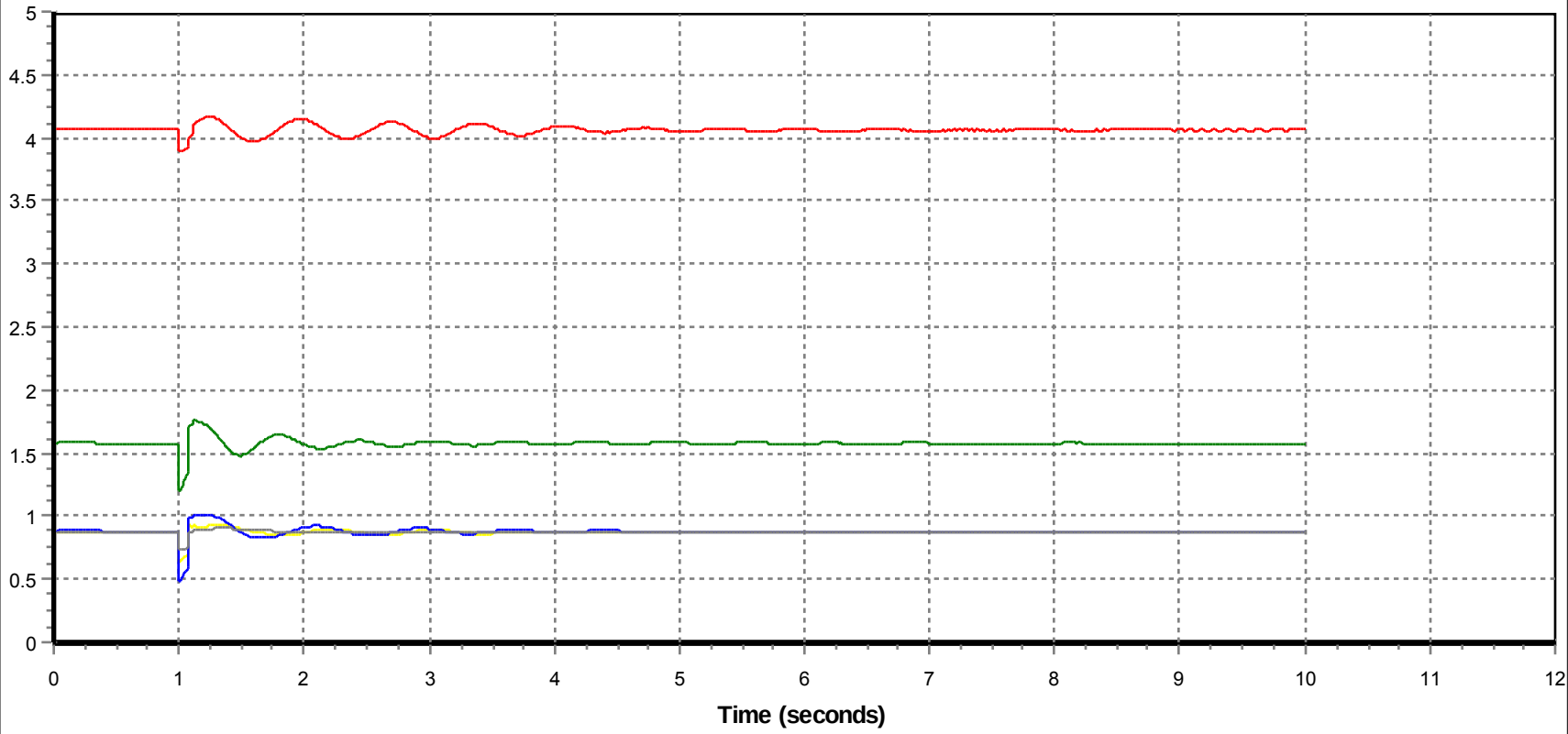

6 - POWR 424[KEEP#2GN 19.000]2 : B03_3pfault_Livock_trip_9L10

7 - POWR 18274[MACKAY2 18.000]1 : B03_3pfault_Livock_trip_9L10

8 - POWR 3745[DOVERN 13.800]G1 : B03_3pfault_Livock_trip_9L10

9 - POWR 19669[MRCP 13.800]1 : B03_3pfault_Livock_trip_9L10

10 - POWR 10236[MUSKEG4 13.800]1 : B03_3pfault_Livock_trip_9L10

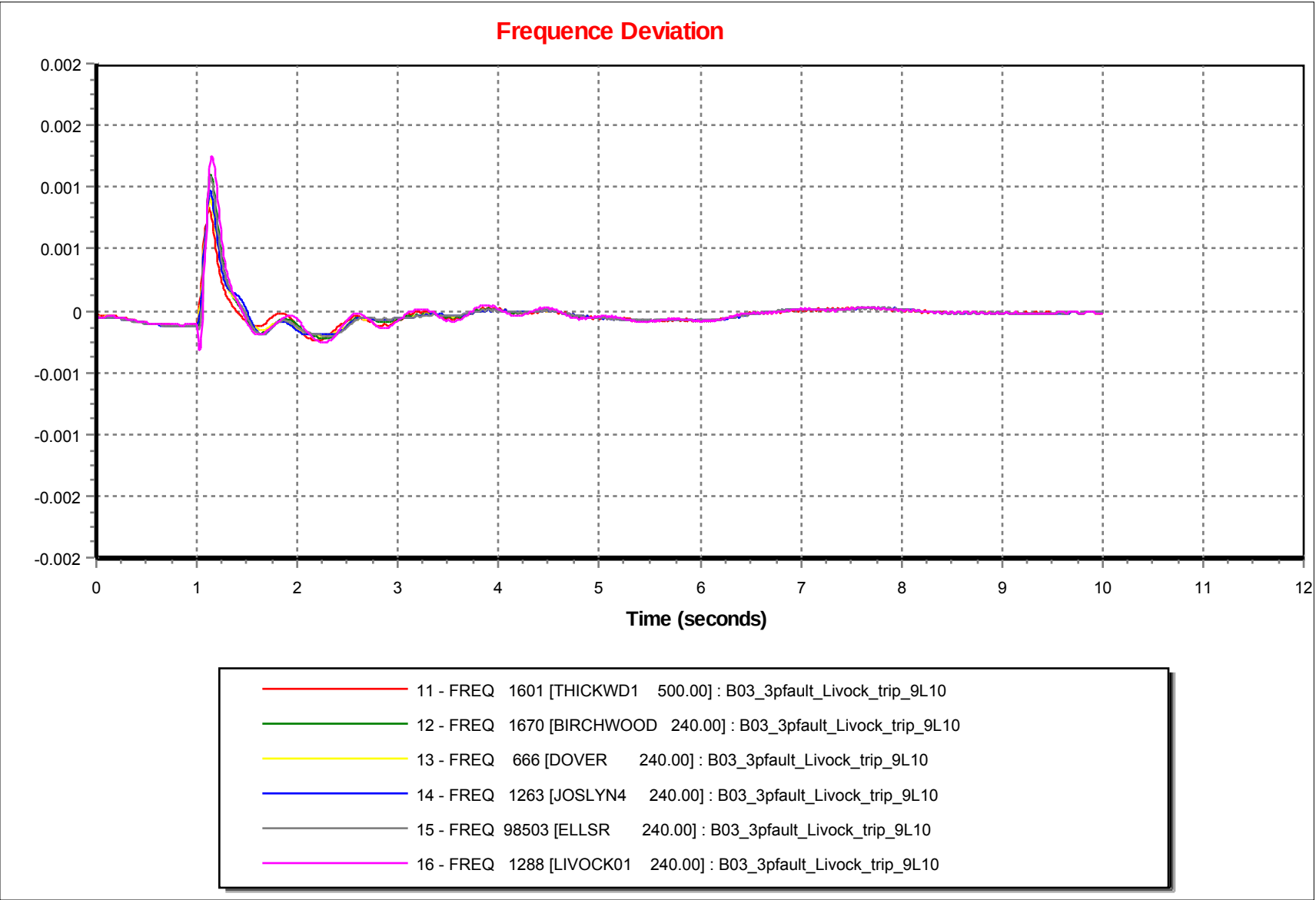
Frequence Deviation
0.002
0.002
0.001
0.001
0
-0.001
-0.001
-0.002
-0.002
0
1
2
3
4
5
6
7
8
9
10
11
12
Time (seconds)
11 - FREQ 1601 [THICKWD1 500.00] : B03_3pfault_Livock_trip_9L10
12 - FREQ 1670 [BIRCHWOOD 240.00] : B03_3pfault_Livock_trip_9L10
13 - FREQ 666 [DOVER 240.00] : B03_3pfault_Livock_trip_9L10
14 - FREQ 1263 [JOSLYN4 240.00] : B03_3pfault_Livock_trip_9L10
15 - FREQ 98503 [ELLSR 240.00] : B03_3pfault_Livock_trip_9L10
16 - FREQ 1288 [LIVOCK01 240.00] : B03_3pfault_Livock_trip_9L10

Voltage

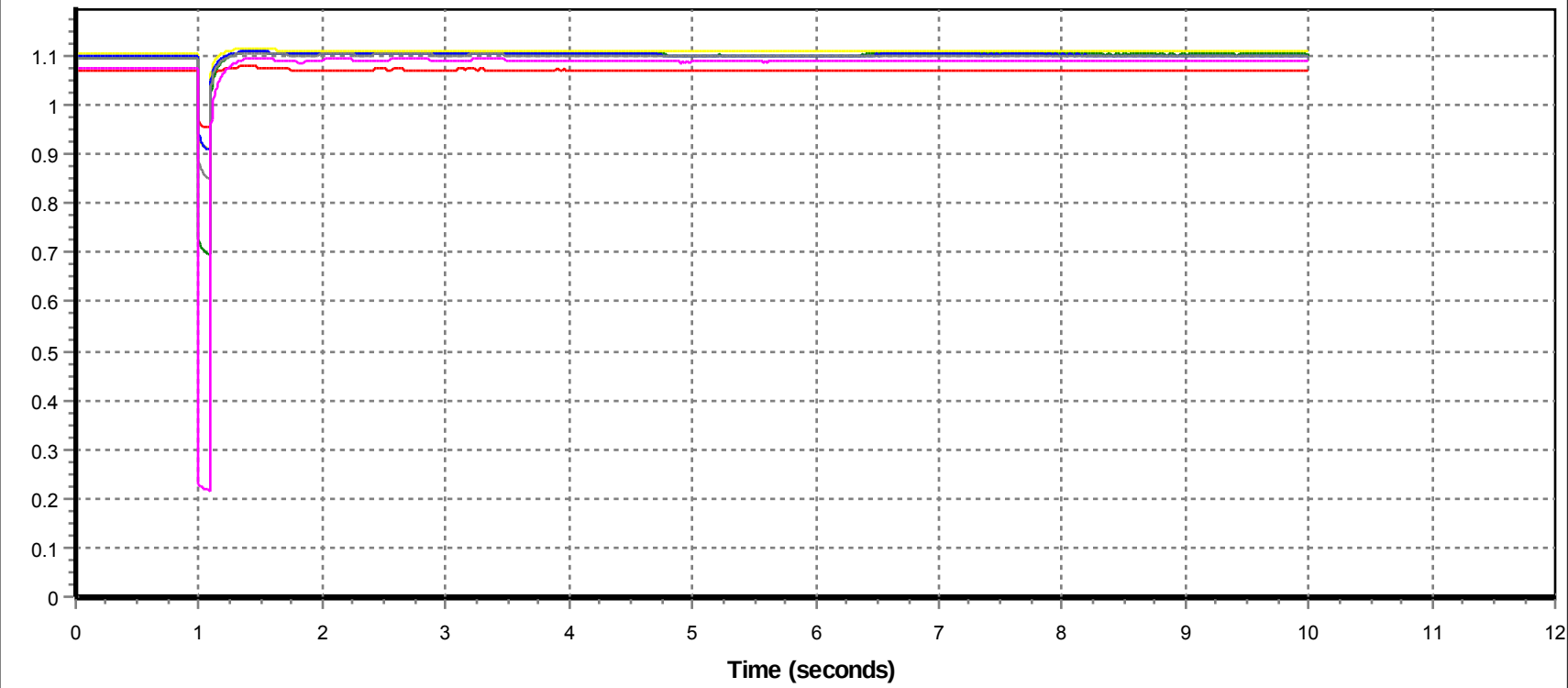

17 - VOLT 1601 [THICKWD1 500.00] : B03_3pfault_Livock_trip_9L10

18 - VOLT 1670 [BIRCHWOOD 240.00] : B03_3pfault_Livock_trip_9L10

19 - VOLT 666 [DOVER 240.00] : B03_3pfault_Livock_trip_9L10

20 - VOLT 1263 [JOSLYN4 240.00] : B03_3pfault_Livock_trip_9L10

21 - VOLT 98503 [ELLSR 240.00] : B03_3pfault_Livock_trip_9L10

22 - VOLT 1288 [LIVOCK01 240.00] : B03_3pfault_Livock_trip_9L10

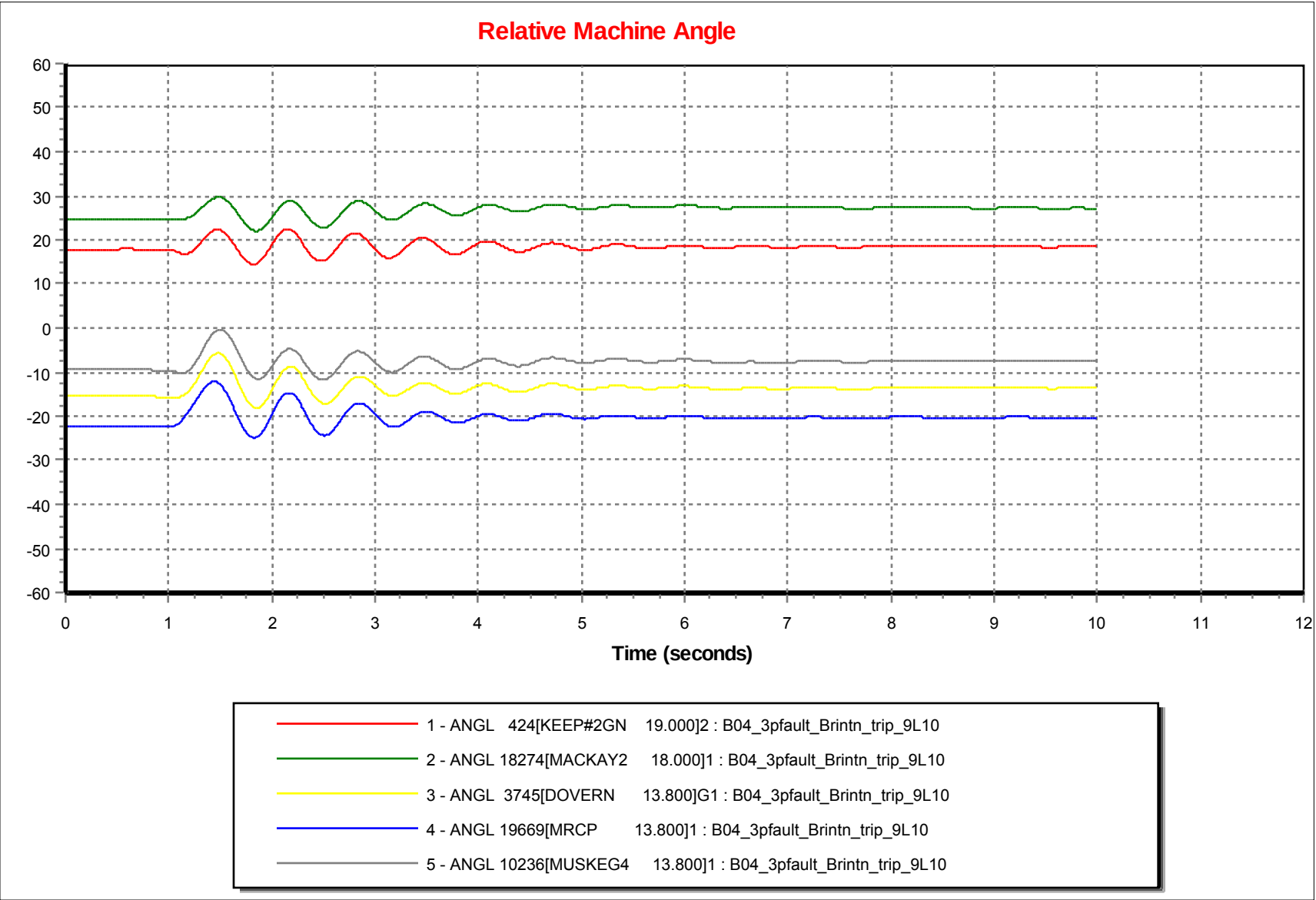
Relative Machine Angle
60
50
40
30
20
10
0
-10
-20
-30
-40
-50
-60
0
1
2
3
4
5
6
7
8
9
10
11
12
Time (seconds)
1 - ANGL 424[KEEP#2GN 19.000]2 : B04_3pfault_Brintn_trip_9L10
2 - ANGL 18274[MACKAY2 18.000]1 : B04_3pfault_Brintn_trip_9L10
3 - ANGL 3745[DOVERN 13.800]G1 : B04_3pfault_Brintn_trip_9L10
4 - ANGL 19669[MRCP 13.800]1 : B04_3pfault_Brintn_trip_9L10
5 - ANGL 10236[MUSKEG4 13.800]1 : B04_3pfault_Brintn_trip_9L10

Machine Power

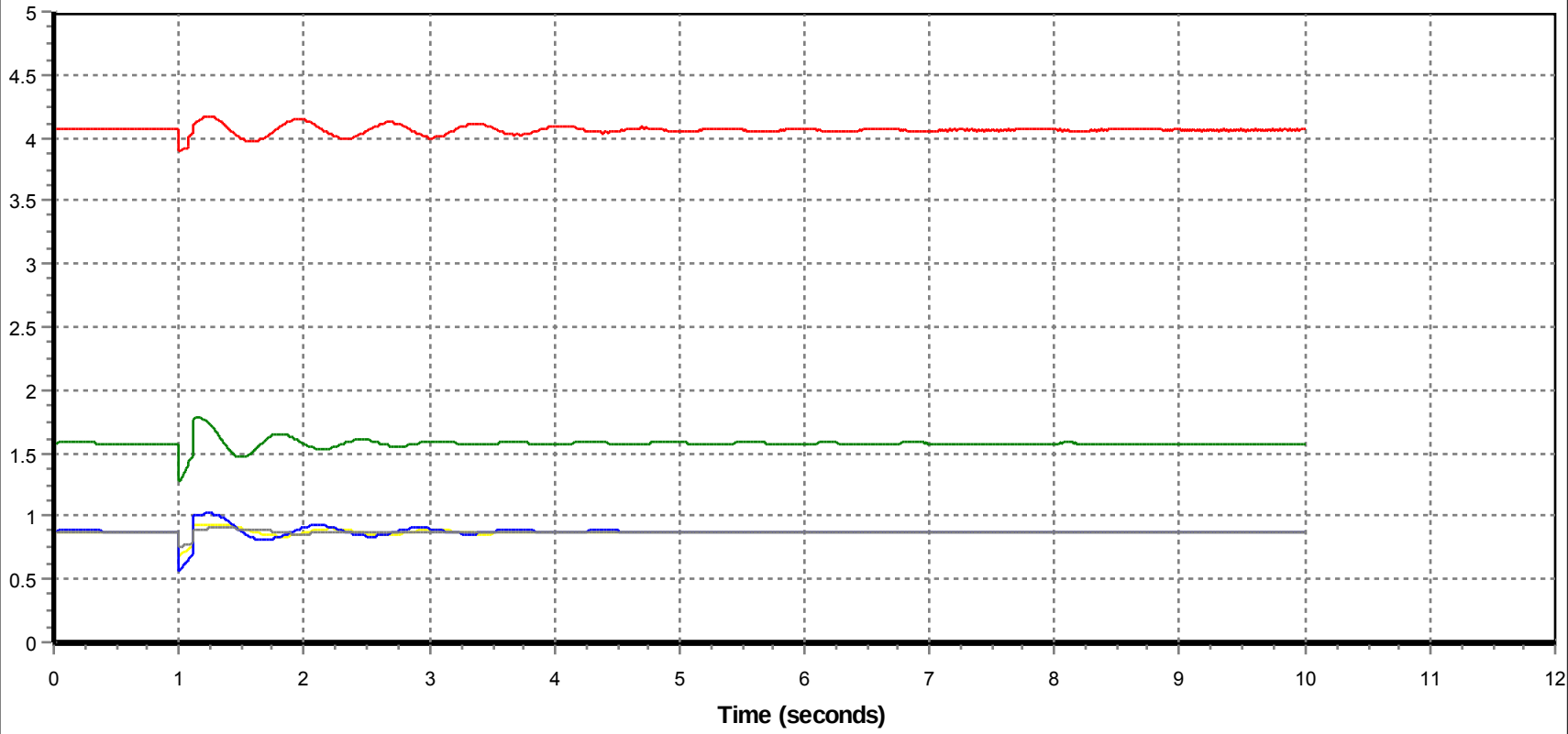

6 - POWR 424[KEEP#2GN 19.000]2 : B04_3pfault_Brintn_trip_9L10

7 - POWR 18274[MACKAY2 18.000]1 : B04_3pfault_Brintn_trip_9L10

8 - POWR 3745[DOVERN 13.800]G1 : B04_3pfault_Brintn_trip_9L10

9 - POWR 19669[MRCP 13.800]1 : B04_3pfault_Brintn_trip_9L10

10 - POWR 10236[MUSKEG4 13.800]1 : B04_3pfault_Brintn_trip_9L10

Frequence Deviation

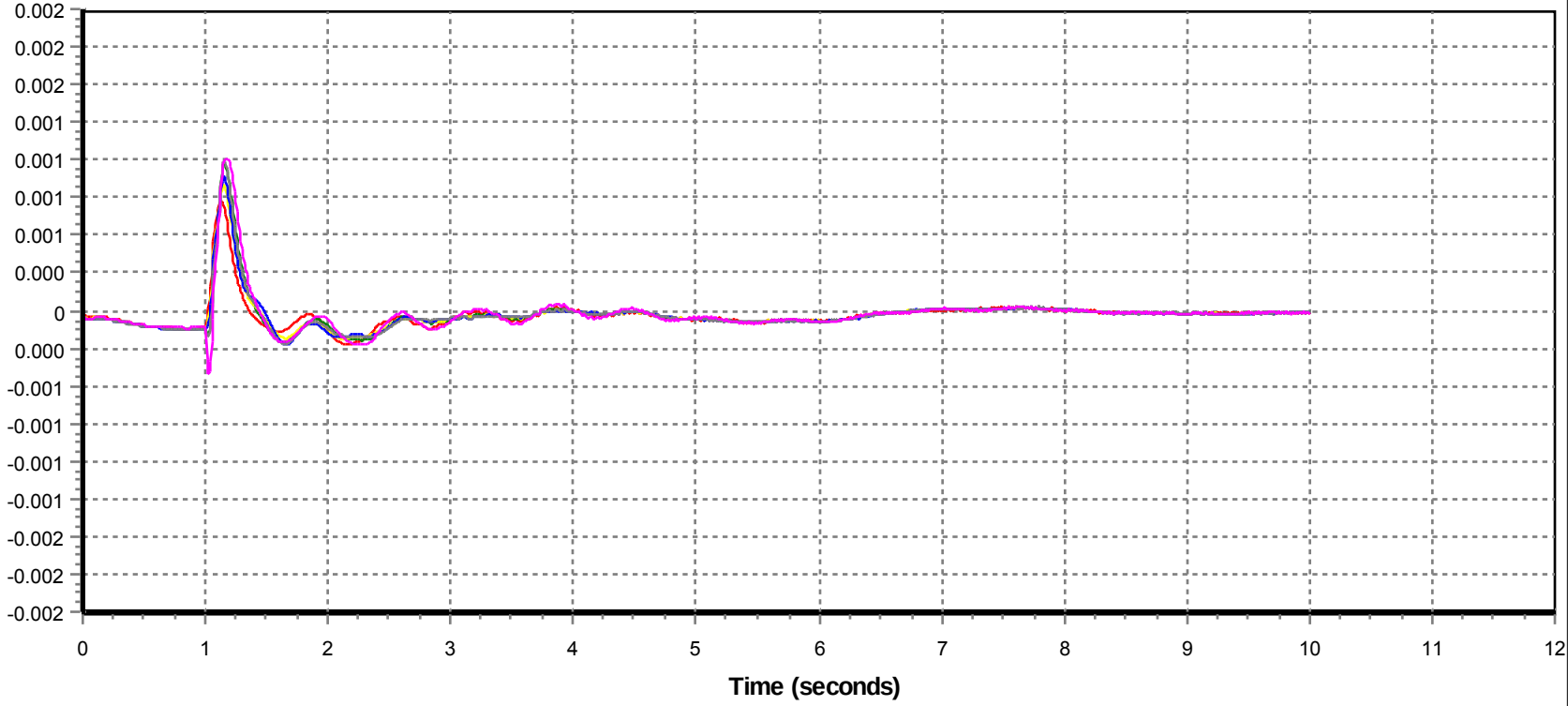

11 - FREQ 1601 [THICKWD1 500.00] : B04_3pfault_Brintn_trip_9L10

12 - FREQ 1670 [BIRCHWOOD 240.00] : B04_3pfault_Brintn_trip_9L10

13 - FREQ 666 [DOVER 240.00] : B04_3pfault_Brintn_trip_9L10

14 - FREQ 1263 [JOSLYN4 240.00] : B04_3pfault_Brintn_trip_9L10

15 - FREQ 98503 [ELLSR 240.00] : B04_3pfault_Brintn_trip_9L10

16 - FREQ 1288 [LIVOCK01 240.00] : B04_3pfault_Brintn_trip_9L10

Voltage

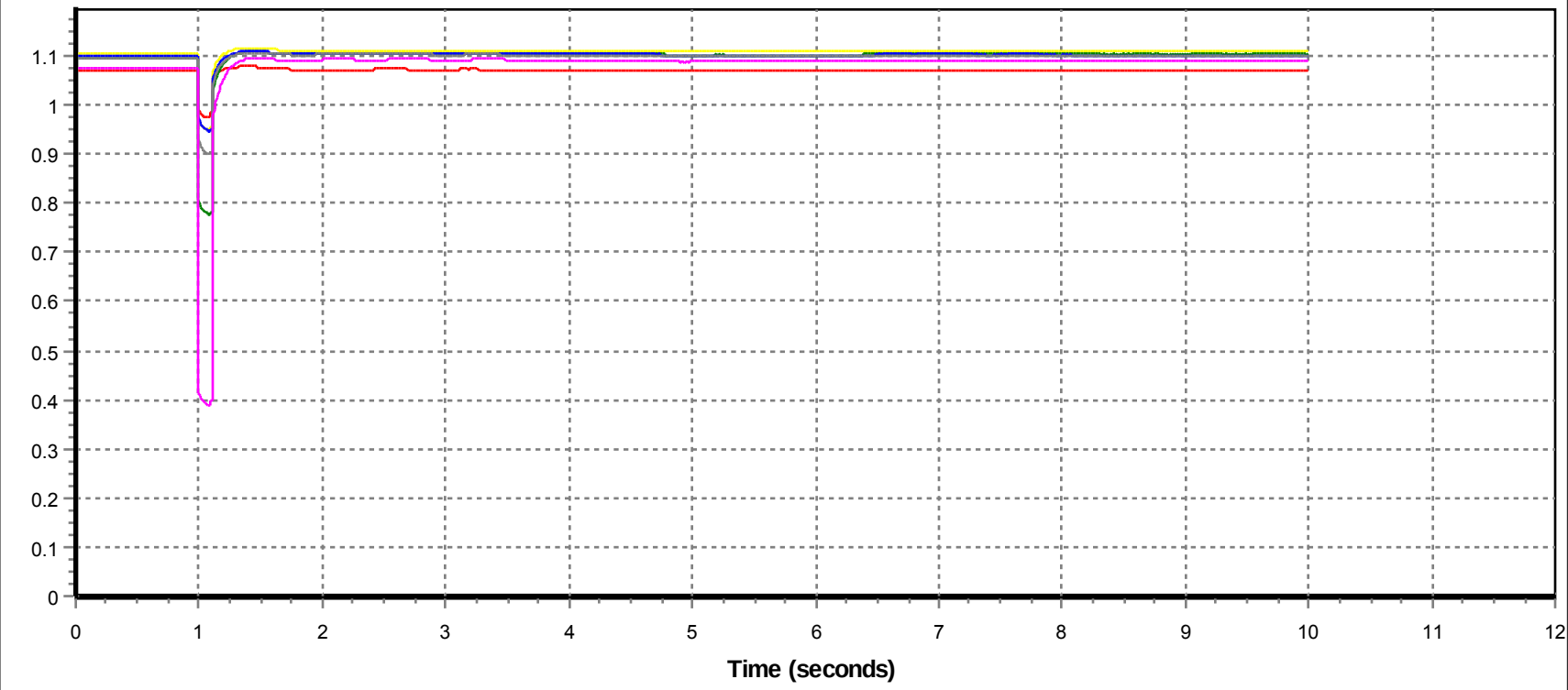

17 - VOLT 1601 [THICKWD1 500.00] : B04_3pfault_Brintn_trip_9L10

18 - VOLT 1670 [BIRCHWOOD 240.00] : B04_3pfault_Brintn_trip_9L10

19 - VOLT 666 [DOVER 240.00] : B04_3pfault_Brintn_trip_9L10

20 - VOLT 1263 [JOSLYN4 240.00] : B04_3pfault_Brintn_trip_9L10

21 - VOLT 98503 [ELLSR 240.00] : B04_3pfault_Brintn_trip_9L10

22 - VOLT 1288 [LIVOCK01 240.00] : B04_3pfault_Brintn_trip_9L10

Relative Machine Angle

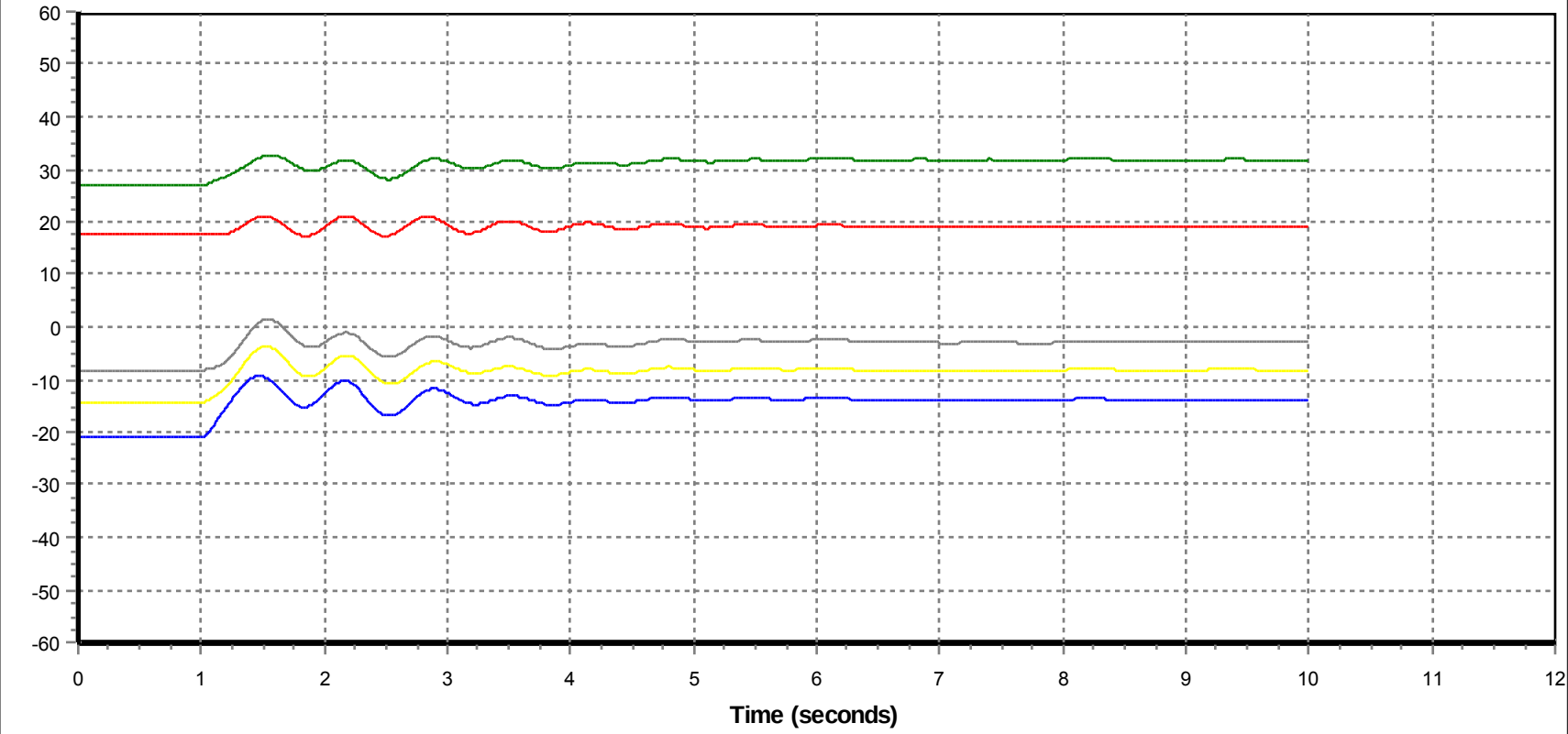

1 - ANGL 424[KEEP#2GN 19.000]2 : B05_3pfault_Livock_trip_9L15

2 - ANGL 18274[MACKAY2 18.000]1 : B05_3pfault_Livock_trip_9L15

3 - ANGL 3745[DOVERN 13.800]G1 : B05_3pfault_Livock_trip_9L15

4 - ANGL 19669[MRCP 13.800]1 : B05_3pfault_Livock_trip_9L15

5 - ANGL 10236[MUSKEG4 13.800]1 : B05_3pfault_Livock_trip_9L15

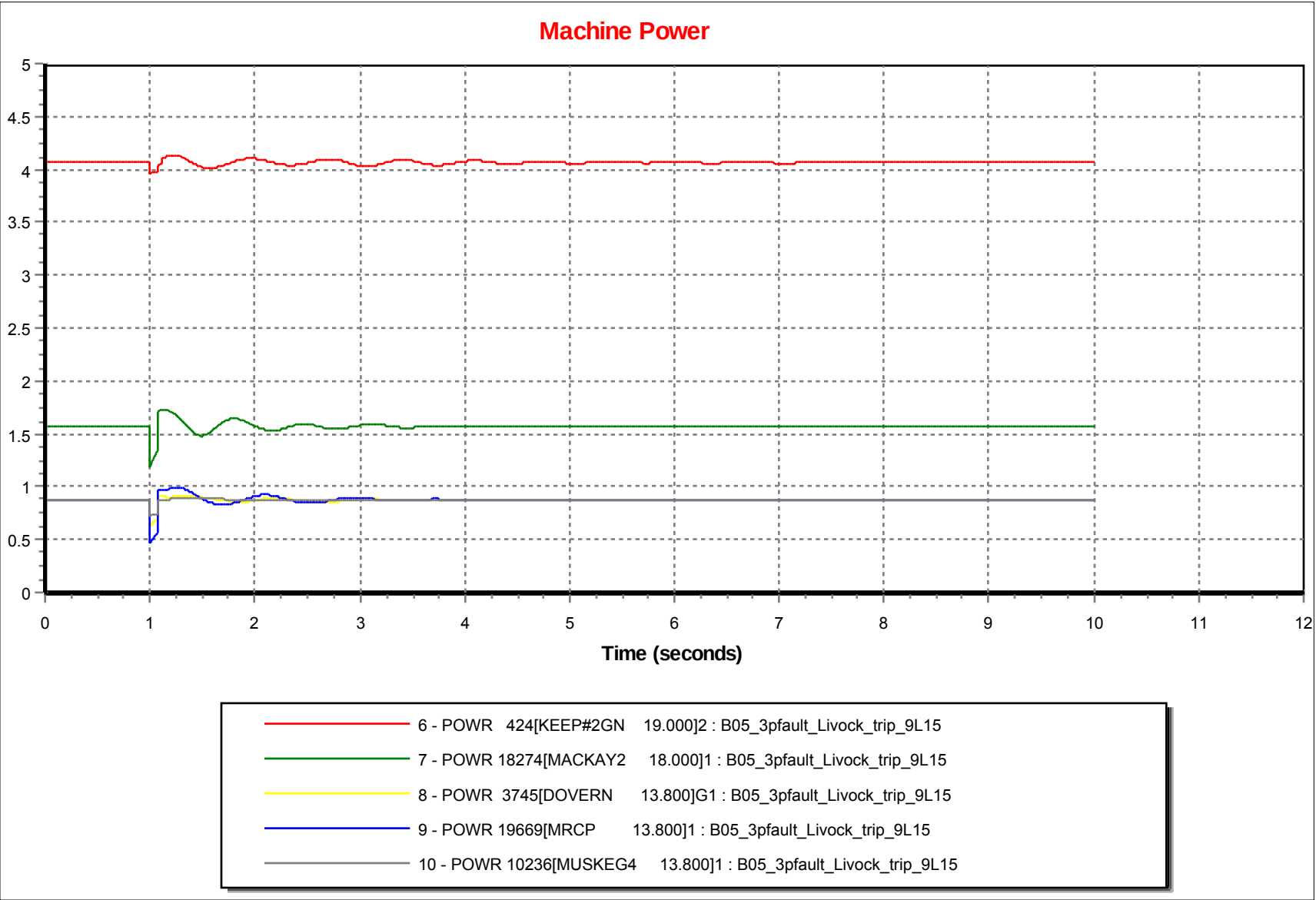
Machine Power
5
4.5
4
3.5
3
2.5
2
1.5
1
0.5
0
0
1
2
3
4
5
6
7
8
9
10
11
12
Time (seconds)
6 - POWR 424[KEEP#2GN 19.000]2 : B05_3pfault_Livock_trip_9L15
7 - POWR 18274[MACKAY2 18.000]1 : B05_3pfault_Livock_trip_9L15
8 - POWR 3745[DOVERN 13.800]G1 : B05_3pfault_Livock_trip_9L15
9 - POWR 19669[MRCP 13.800]1 : B05_3pfault_Livock_trip_9L15
10 - POWR 10236[MUSKEG4 13.800]1 : B05_3pfault_Livock_trip_9L15

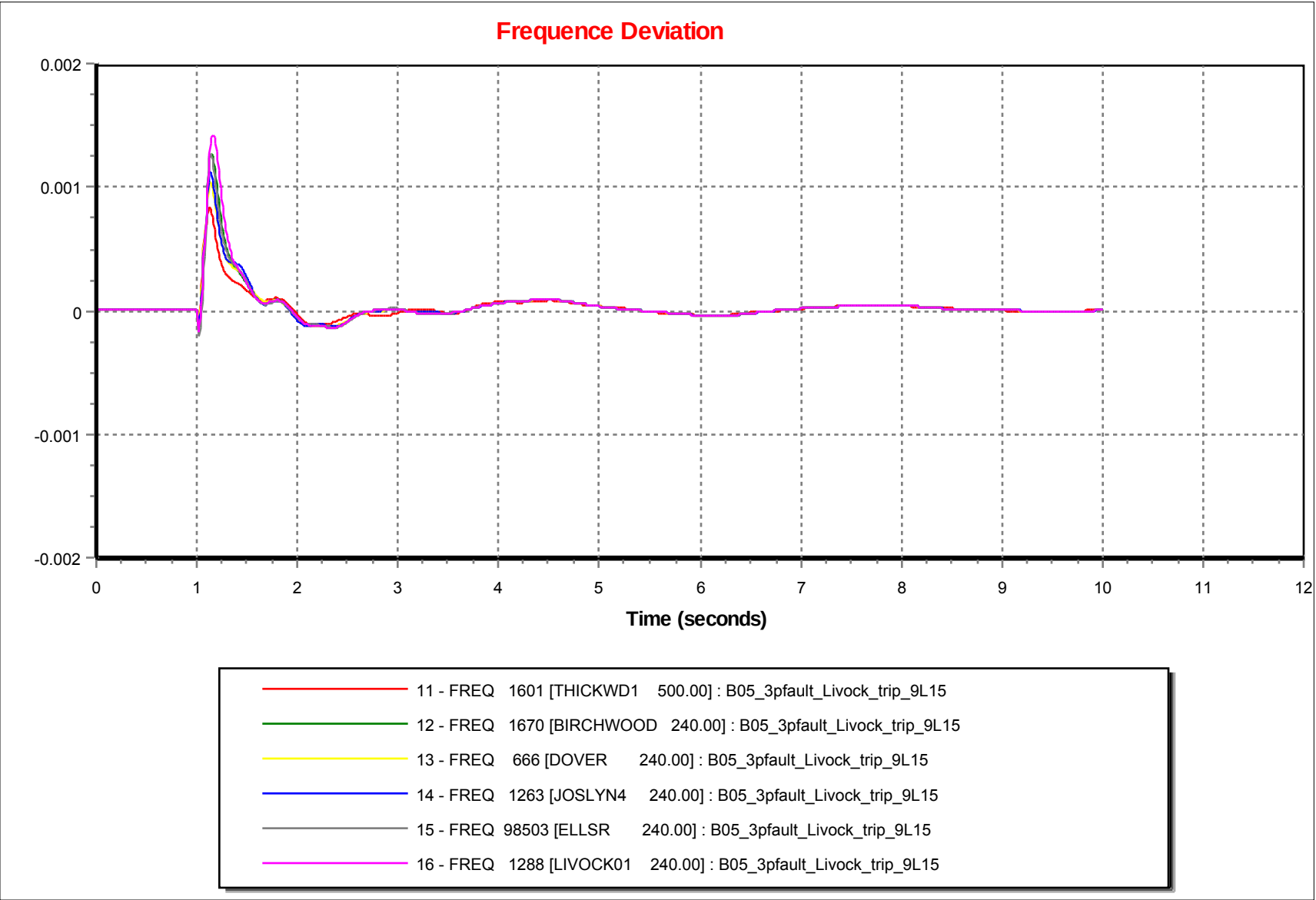
Frequence Deviation
0.002
0.001
0
-0.001
-0.002
0
1
2
3
4
5
6
7
8
9
10
11
12
Time (seconds)
11 - FREQ 1601 [THICKWD1 500.00] : B05_3pfault_Livock_trip_9L15
12 - FREQ 1670 [BIRCHWOOD 240.00] : B05_3pfault_Livock_trip_9L15
13 - FREQ 666 [DOVER 240.00] : B05_3pfault_Livock_trip_9L15
14 - FREQ 1263 [JOSLYN4 240.00] : B05_3pfault_Livock_trip_9L15
15 - FREQ 98503 [ELLSR 240.00] : B05_3pfault_Livock_trip_9L15
16 - FREQ 1288 [LIVOCK01 240.00] : B05_3pfault_Livock_trip_9L15

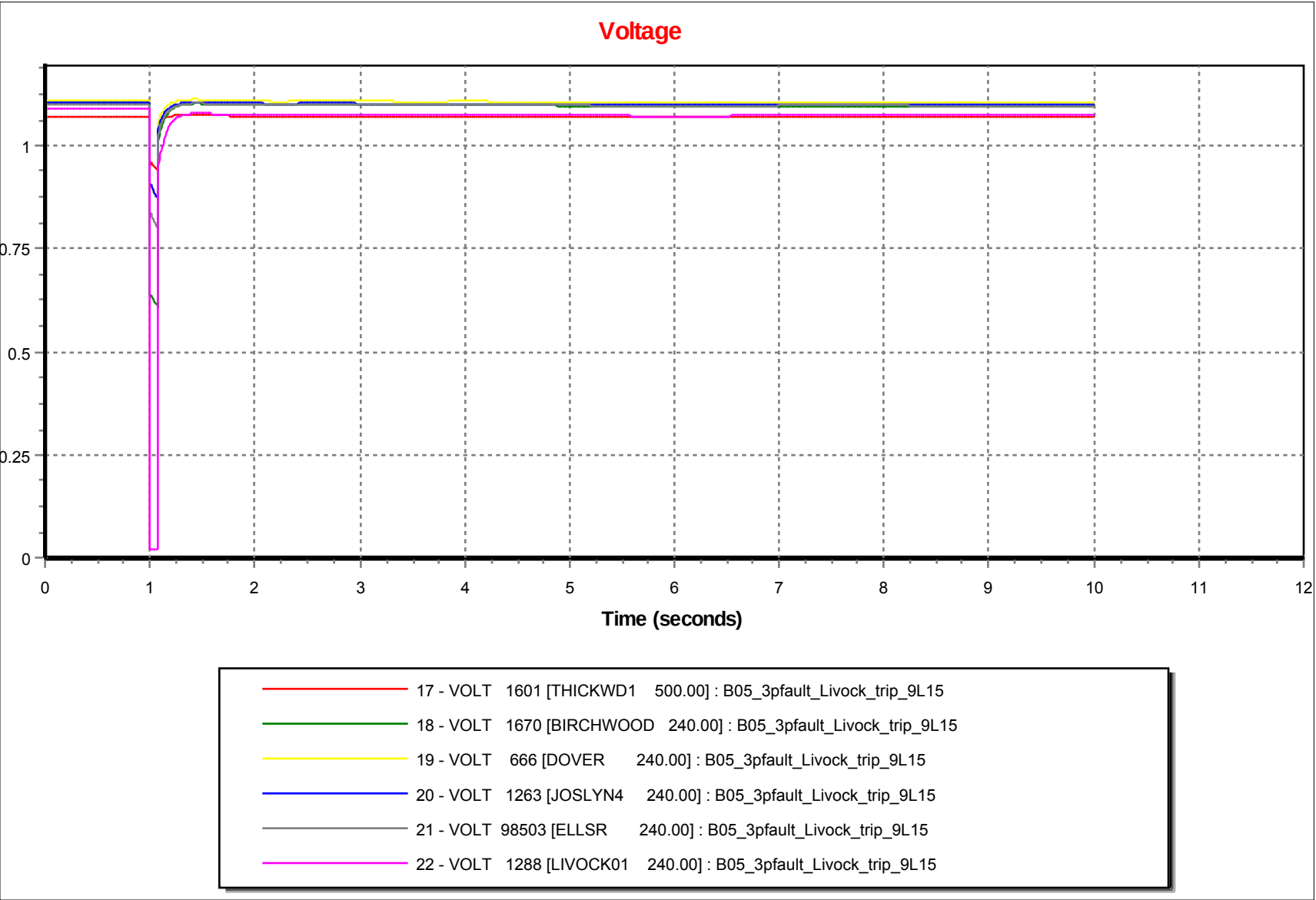
Voltage
1
0.75
0.5
0.25
0
0
1
2
3
4
5
6
7
8
9
10
11
12
Time (seconds)
17 - VOLT 1601 [THICKWD1 500.00] : B05_3pfault_Livock_trip_9L15
18 - VOLT 1670 [BIRCHWOOD 240.00] : B05_3pfault_Livock_trip_9L15
19 - VOLT 666 [DOVER 240.00] : B05_3pfault_Livock_trip_9L15
20 - VOLT 1263 [JOSLYN4 240.00] : B05_3pfault_Livock_trip_9L15
21 - VOLT 98503 [ELLSR 240.00] : B05_3pfault_Livock_trip_9L15
22 - VOLT 1288 [LIVOCK01 240.00] : B05_3pfault_Livock_trip_9L15

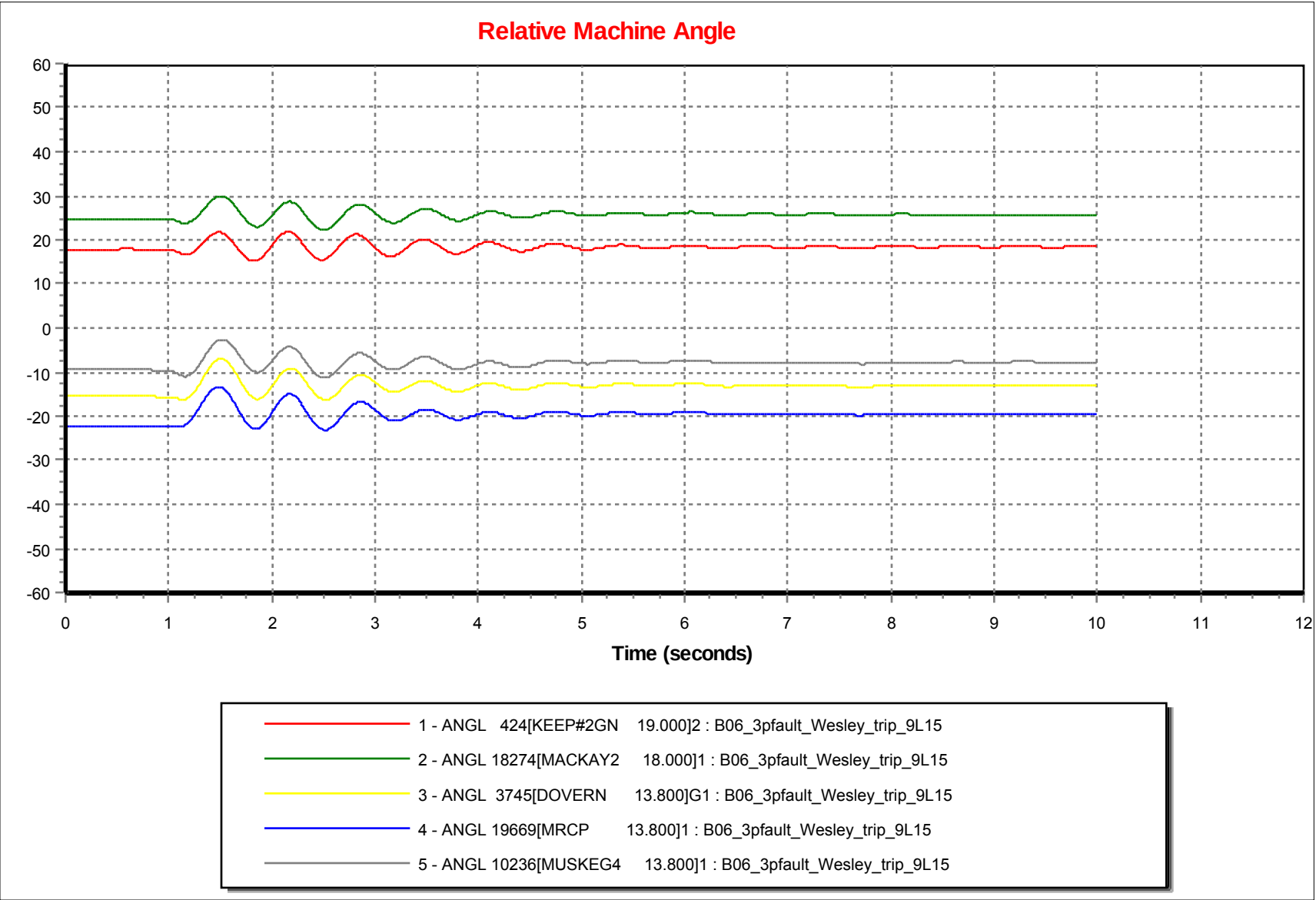
Relative Machine Angle
60
50
40
30
20
10
0
-10
-20
-30
-40
-50
-60
0
1
2
3
4
5
6
7
8
9
10
11
12
Time (seconds)
1 - ANGL 424[KEEP#2GN 19.000]2 : B06_3pfault_Wesley_trip_9L15
2 - ANGL 18274[MACKAY2 18.000]1 : B06_3pfault_Wesley_trip_9L15
3 - ANGL 3745[DOVERN 13.800]G1 : B06_3pfault_Wesley_trip_9L15
4 - ANGL 19669[MRCP 13.800]1 : B06_3pfault_Wesley_trip_9L15
5 - ANGL 10236[MUSKEG4 13.800]1 : B06_3pfault_Wesley_trip_9L15

Machine Power

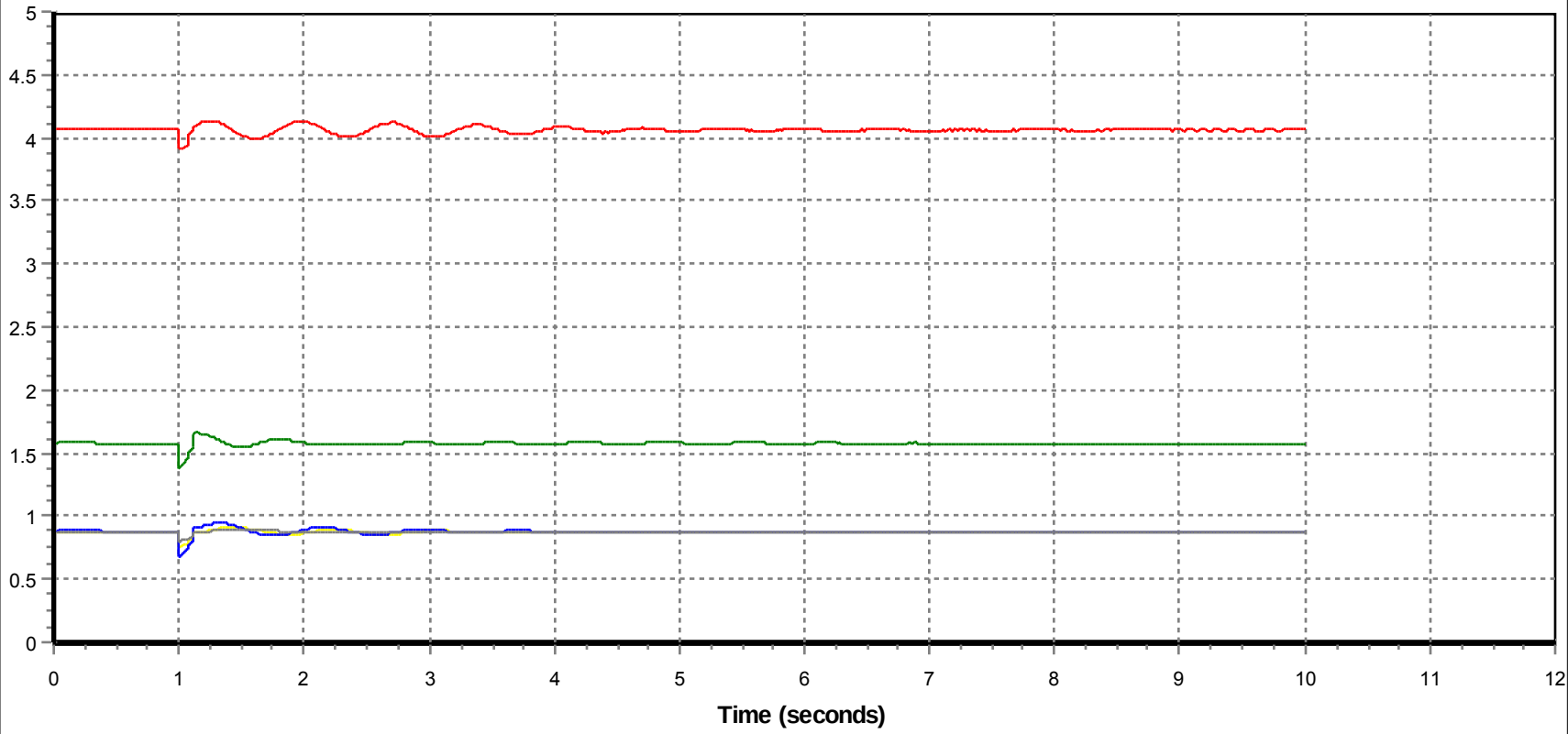

6 - POWR 424[KEEP#2GN 19.000]2 : B06_3pfault_Wesley_trip_9L15

7 - POWR 18274[MACKAY2 18.000]1 : B06_3pfault_Wesley_trip_9L15

8 - POWR 3745[DOVERN 13.800]G1 : B06_3pfault_Wesley_trip_9L15

9 - POWR 19669[MRCP 13.800]1 : B06_3pfault_Wesley_trip_9L15

10 - POWR 10236[MUSKEG4 13.800]1 : B06_3pfault_Wesley_trip_9L15

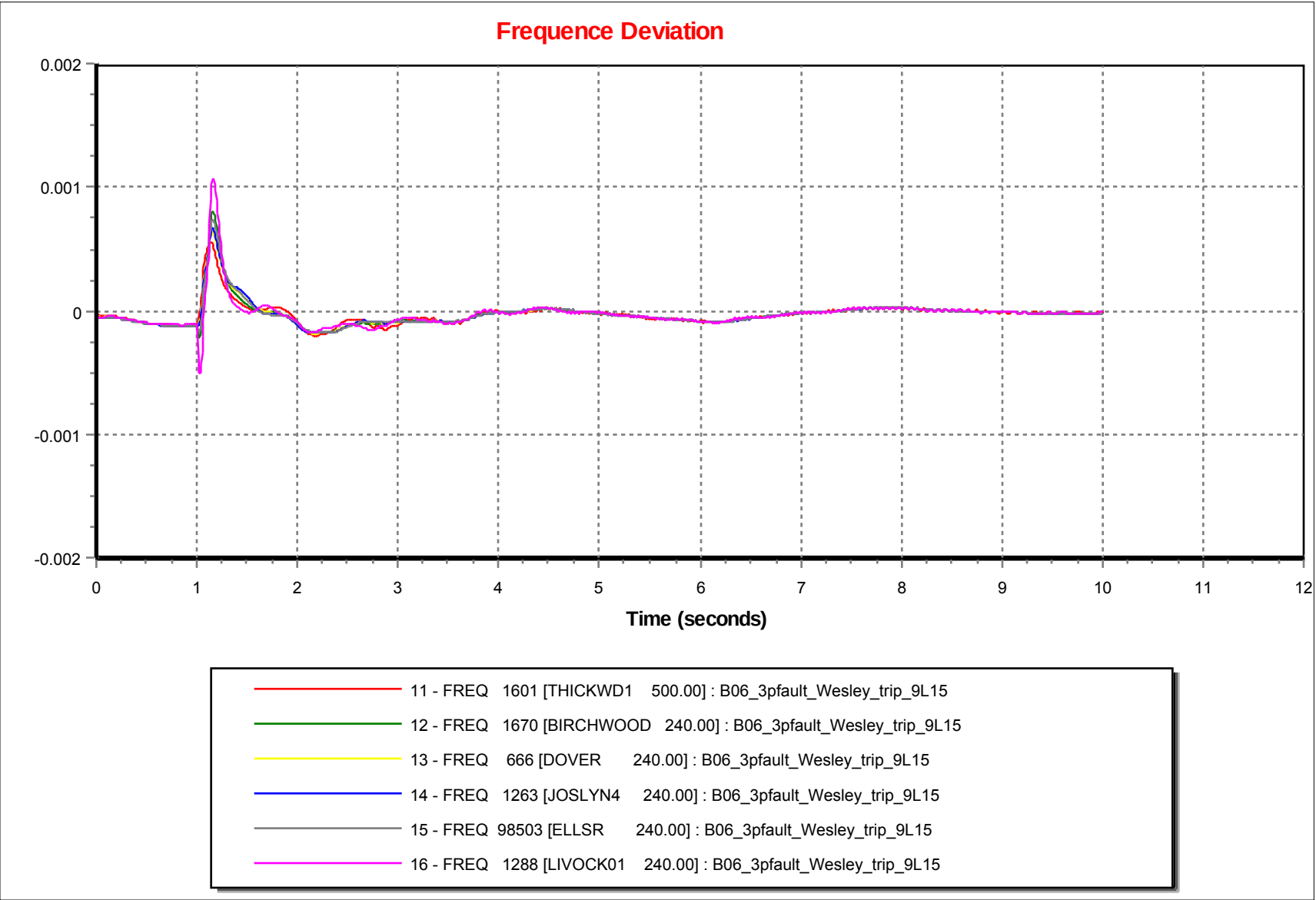
Frequence Deviation
0.002
0.001
0
-0.001
-0.002
0
1
2
3
4
5
6
7
8
9
10
11
12
Time (seconds)
11 - FREQ 1601 [THICKWD1 500.00] : B06_3pfault_Wesley_trip_9L15
12 - FREQ 1670 [BIRCHWOOD 240.00] : B06_3pfault_Wesley_trip_9L15
13 - FREQ 666 [DOVER 240.00] : B06_3pfault_Wesley_trip_9L15
14 - FREQ 1263 [JOSLYN4 240.00] : B06_3pfault_Wesley_trip_9L15
15 - FREQ 98503 [ELLSR 240.00] : B06_3pfault_Wesley_trip_9L15
16 - FREQ 1288 [LIVOCK01 240.00] : B06_3pfault_Wesley_trip_9L15

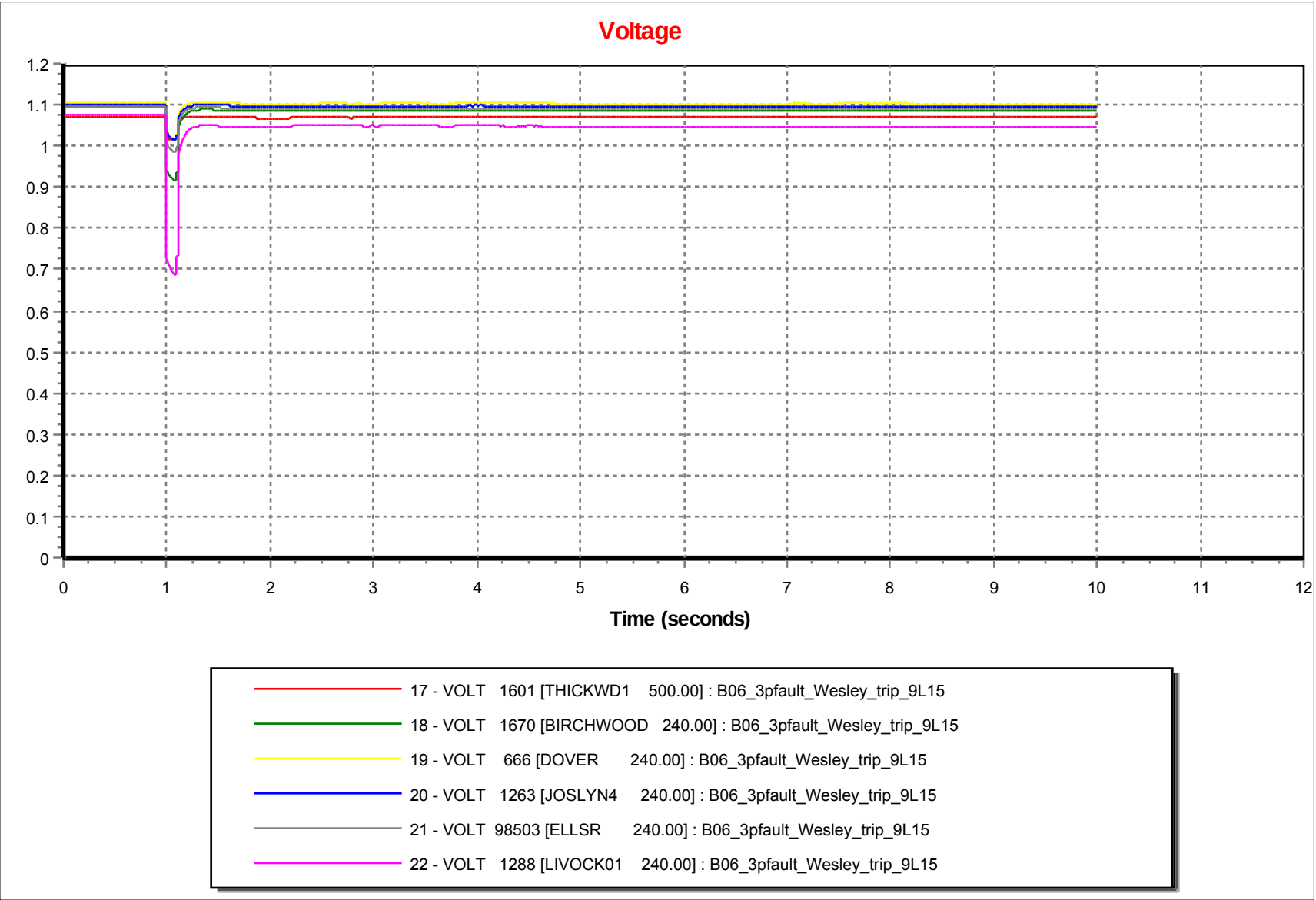
Voltage
1.2
1.1
1
0.9
0.8
0.7
0.6
0.5
0.4
0.3
0.2
0.1
0
0
1
2
3
4
5
6
7
8
9
10
11
12
Time (seconds)
17 - VOLT 1601 [THICKWD1 500.00] : B06_3pfault_Wesley_trip_9L15
18 - VOLT 1670 [BIRCHWOOD 240.00] : B06_3pfault_Wesley_trip_9L15
19 - VOLT 666 [DOVER 240.00] : B06_3pfault_Wesley_trip_9L15
20 - VOLT 1263 [JOSLYN4 240.00] : B06_3pfault_Wesley_trip_9L15
21 - VOLT 98503 [ELLSR 240.00] : B06_3pfault_Wesley_trip_9L15
22 - VOLT 1288 [LIVOCK01 240.00] : B06_3pfault_Wesley_trip_9L15

Relative Machine Angle

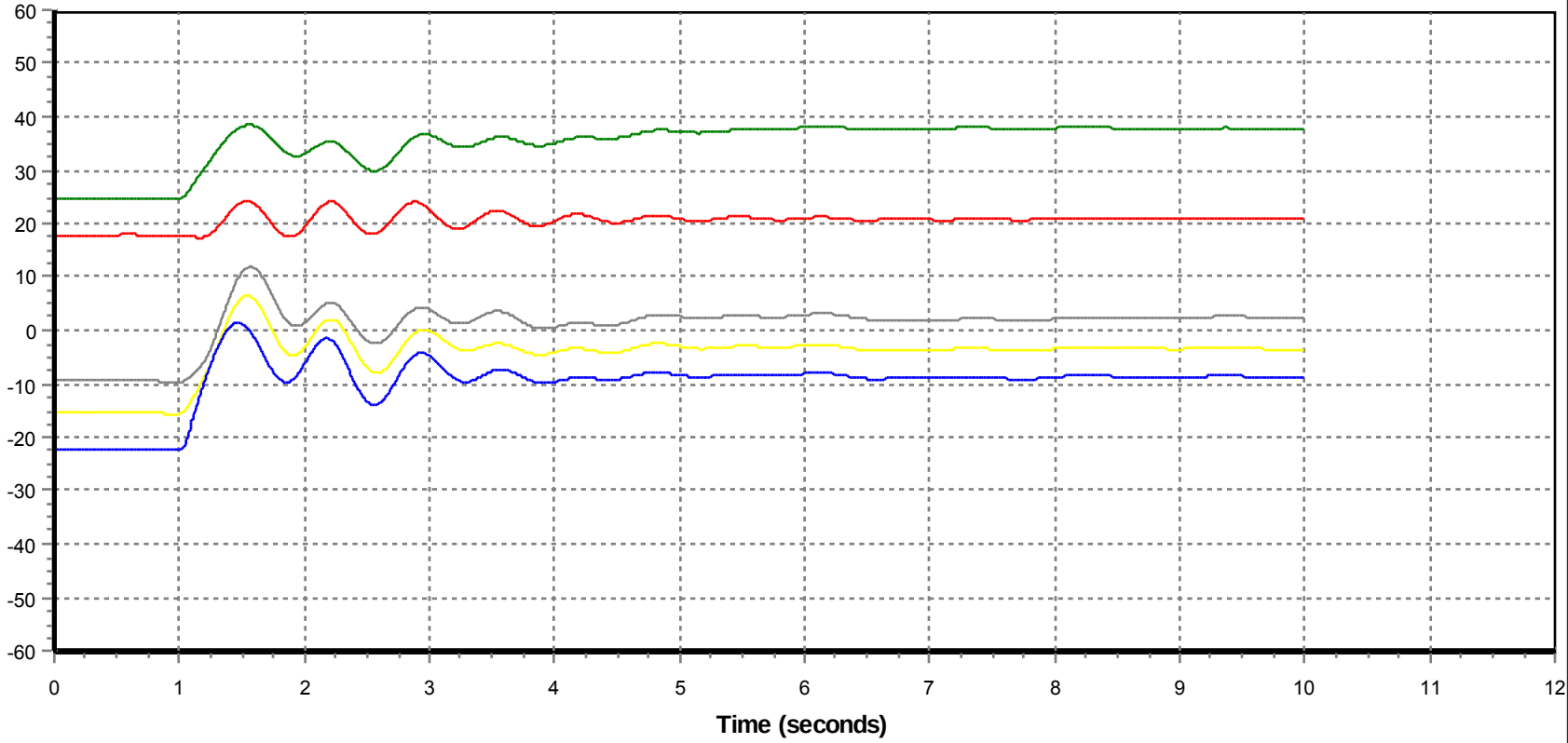

1 - ANGL 424[KEEP#2GN 19.000]2 : B07_3pfault_Birchwood_trip_9L57

2 - ANGL 18274[MACKAY2 18.000]1 : B07_3pfault_Birchwood_trip_9L57

3 - ANGL 3745[DOVERN 13.800]G1 : B07_3pfault_Birchwood_trip_9L57

4 - ANGL 19669[MRCP 13.800]1 : B07_3pfault_Birchwood_trip_9L57

5 - ANGL 10236[MUSKEG4 13.800]1 : B07_3pfault_Birchwood_trip_9L57

Machine Power

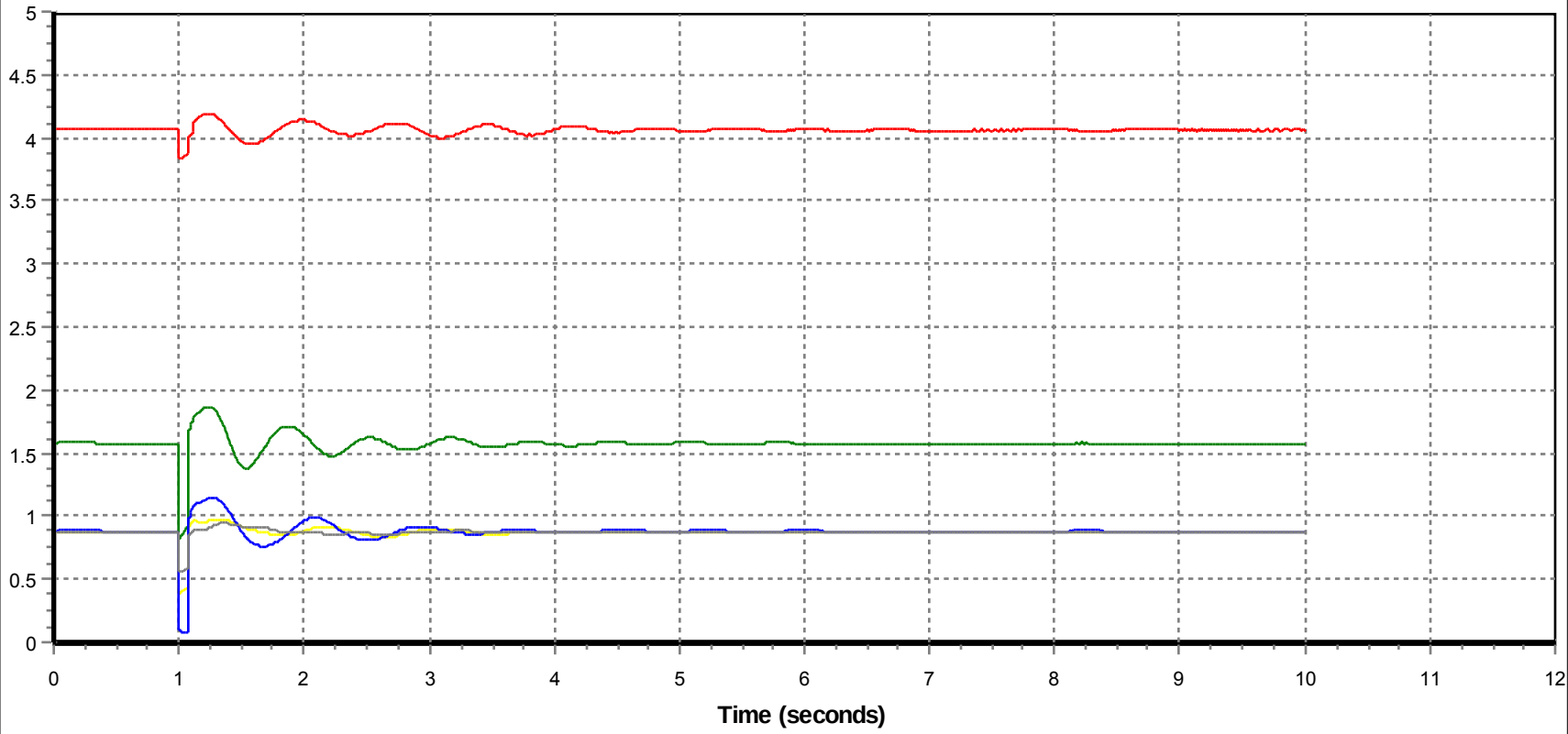

6 - POWR 424[KEEP#2GN 19.000]2 : B07_3pfault_Birchwood_trip_9L57

7 - POWR 18274[MACKAY2 18.000]1 : B07_3pfault_Birchwood_trip_9L57

8 - POWR 3745[DOVERN 13.800]G1 : B07_3pfault_Birchwood_trip_9L57

9 - POWR 19669[MRCP 13.800]1 : B07_3pfault_Birchwood_trip_9L57

10 - POWR 10236[MUSKEG4 13.800]1 : B07_3pfault_Birchwood_trip_9L57

Frequence Deviation

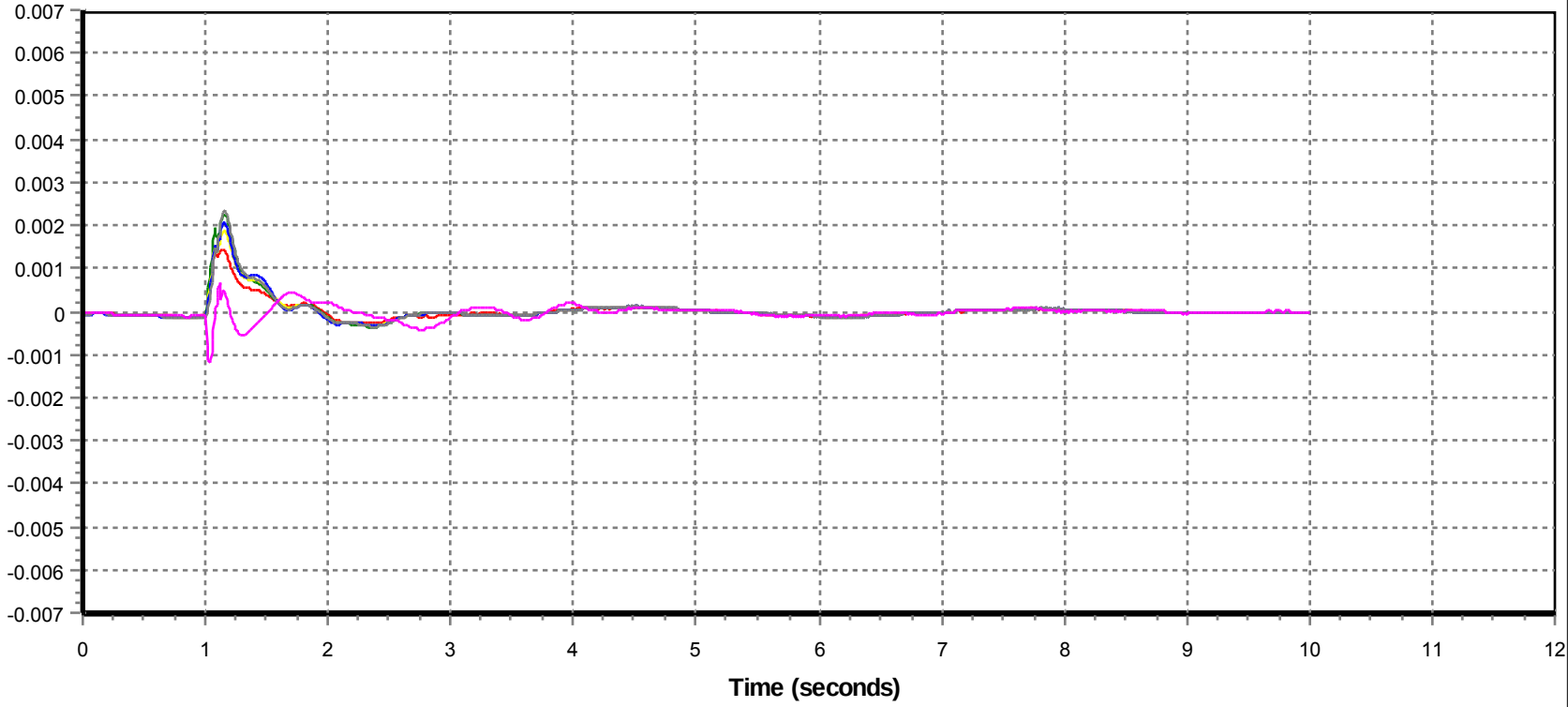

11 - FREQ 1601 [THICKWD1 500.00] : B07_3pfault_Birchwood_trip_9L57

12 - FREQ 1670 [BIRCHWOOD 240.00] : B07_3pfault_Birchwood_trip_9L57

13 - FREQ 666 [DOVER 240.00] : B07_3pfault_Birchwood_trip_9L57

14 - FREQ 1263 [JOSLYN4 240.00] : B07_3pfault_Birchwood_trip_9L57

15 - FREQ 98503 [ELLSR 240.00] : B07_3pfault_Birchwood_trip_9L57

16 - FREQ 1288 [LIVOCK01 240.00] : B07_3pfault_Birchwood_trip_9L57

Voltage

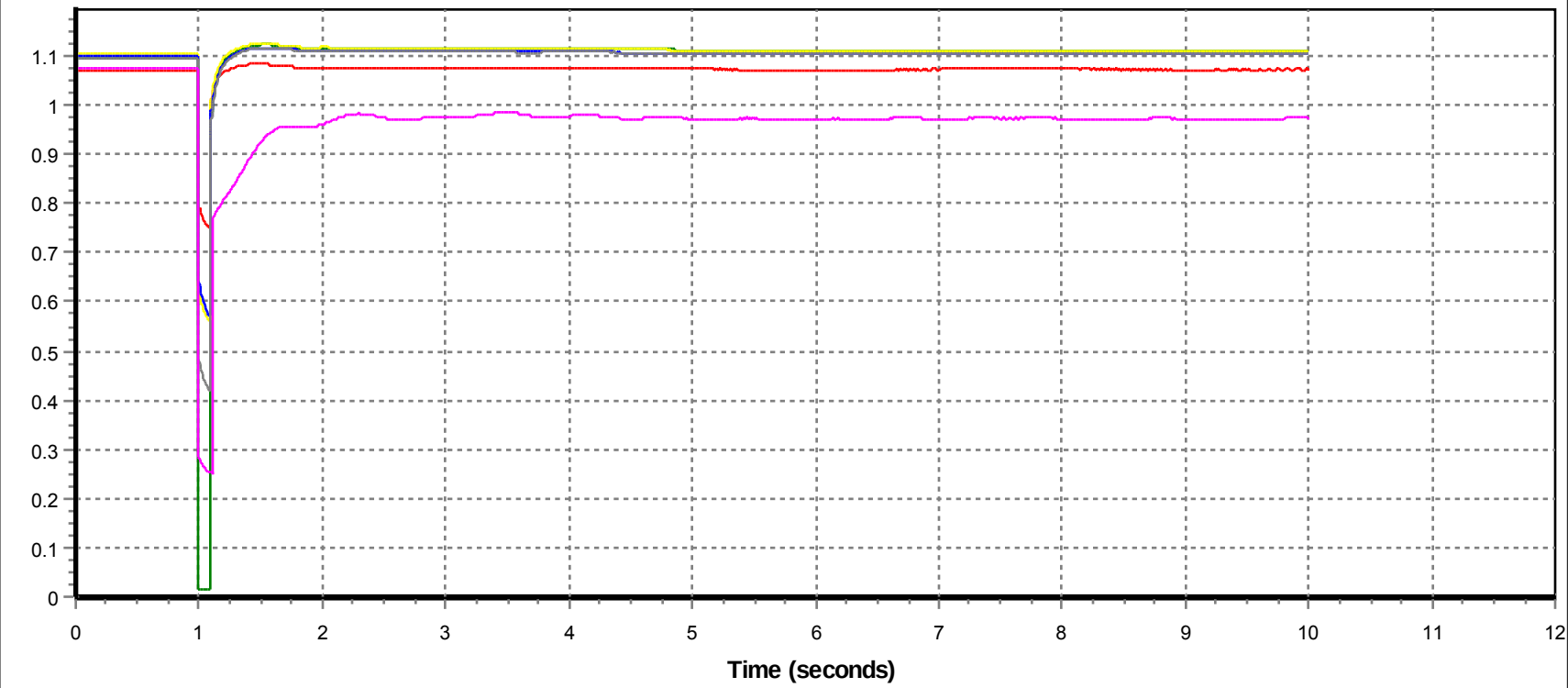

17 - VOLT 1601 [THICKWD1 500.00] : B07_3pfault_Birchwood_trip_9L57

18 - VOLT 1670 [BIRCHWOOD 240.00] : B07_3pfault_Birchwood_trip_9L57

19 - VOLT 666 [DOVER 240.00] : B07_3pfault_Birchwood_trip_9L57

20 - VOLT 1263 [JOSLYN4 240.00] : B07_3pfault_Birchwood_trip_9L57

21 - VOLT 98503 [ELLSR 240.00] : B07_3pfault_Birchwood_trip_9L57

22 - VOLT 1288 [LIVOCK01 240.00] : B07_3pfault_Birchwood_trip_9L57

Relative Machine Angle

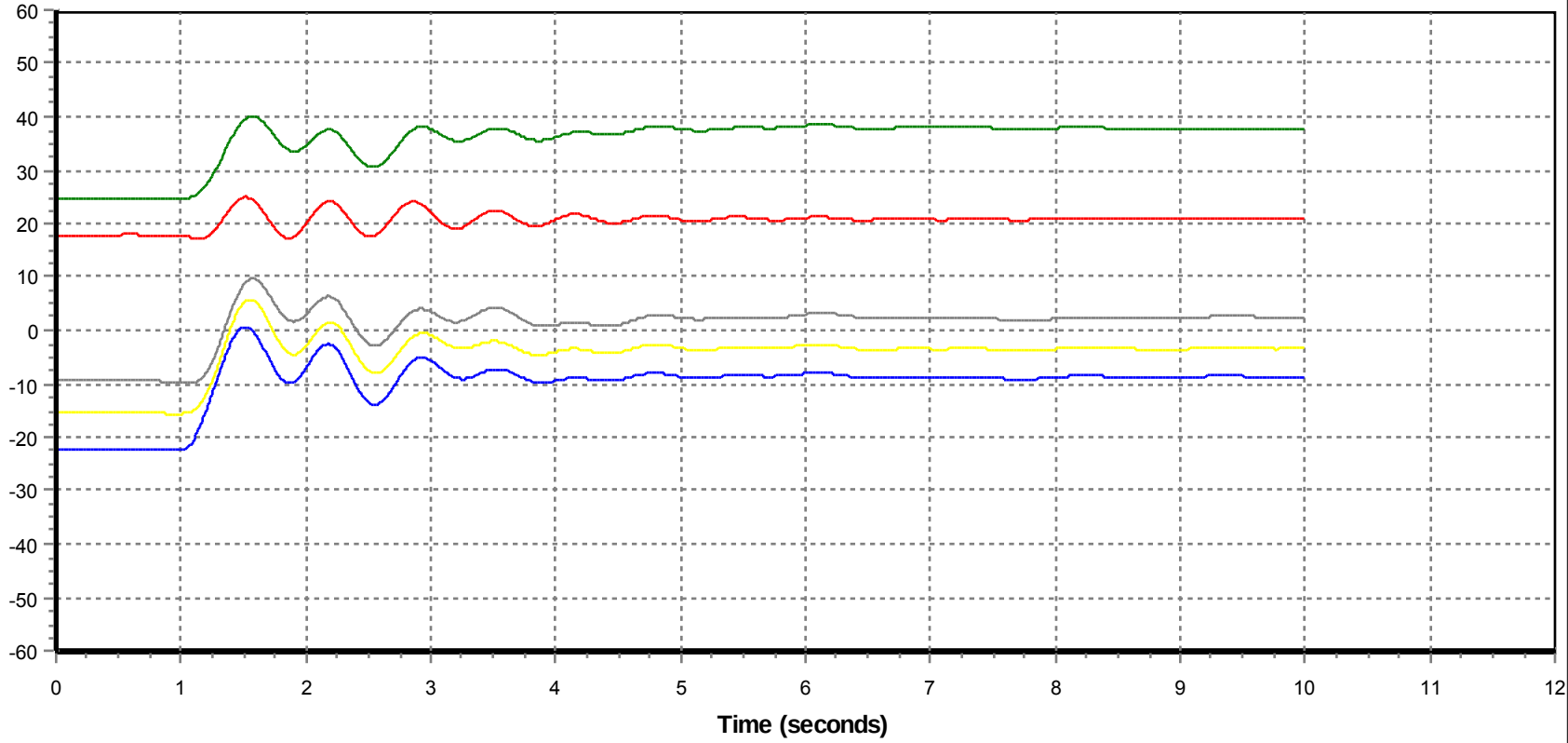

1 - ANGL 424[KEEP#2GN 19.000]2 : B08_3pfault_Livock_trip_9L57

2 - ANGL 18274[MACKAY2 18.000]1 : B08_3pfault_Livock_trip_9L57

3 - ANGL 3745[DOVERN 13.800]G1 : B08_3pfault_Livock_trip_9L57

4 - ANGL 19669[MRCP 13.800]1 : B08_3pfault_Livock_trip_9L57

5 - ANGL 10236[MUSKEG4 13.800]1 : B08_3pfault_Livock_trip_9L57

Machine Power

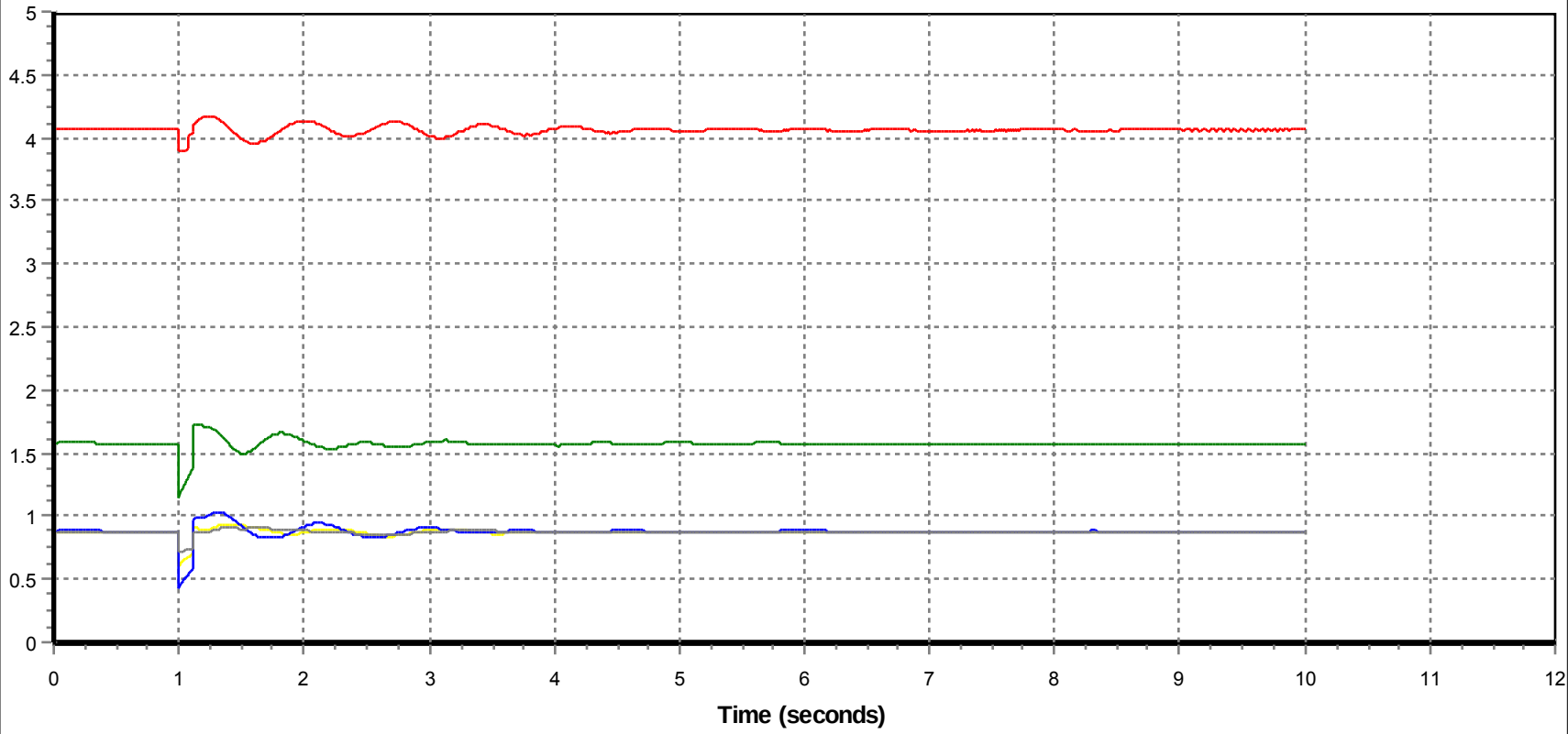

6 - POWR 424[KEEP#2GN 19.000]2 : B08_3pfault_Livock_trip_9L57

7 - POWR 18274[MACKAY2 18.000]1 : B08_3pfault_Livock_trip_9L57

8 - POWR 3745[DOVERN 13.800]G1 : B08_3pfault_Livock_trip_9L57

9 - POWR 19669[MRCP 13.800]1 : B08_3pfault_Livock_trip_9L57

10 - POWR 10236[MUSKEG4 13.800]1 : B08_3pfault_Livock_trip_9L57

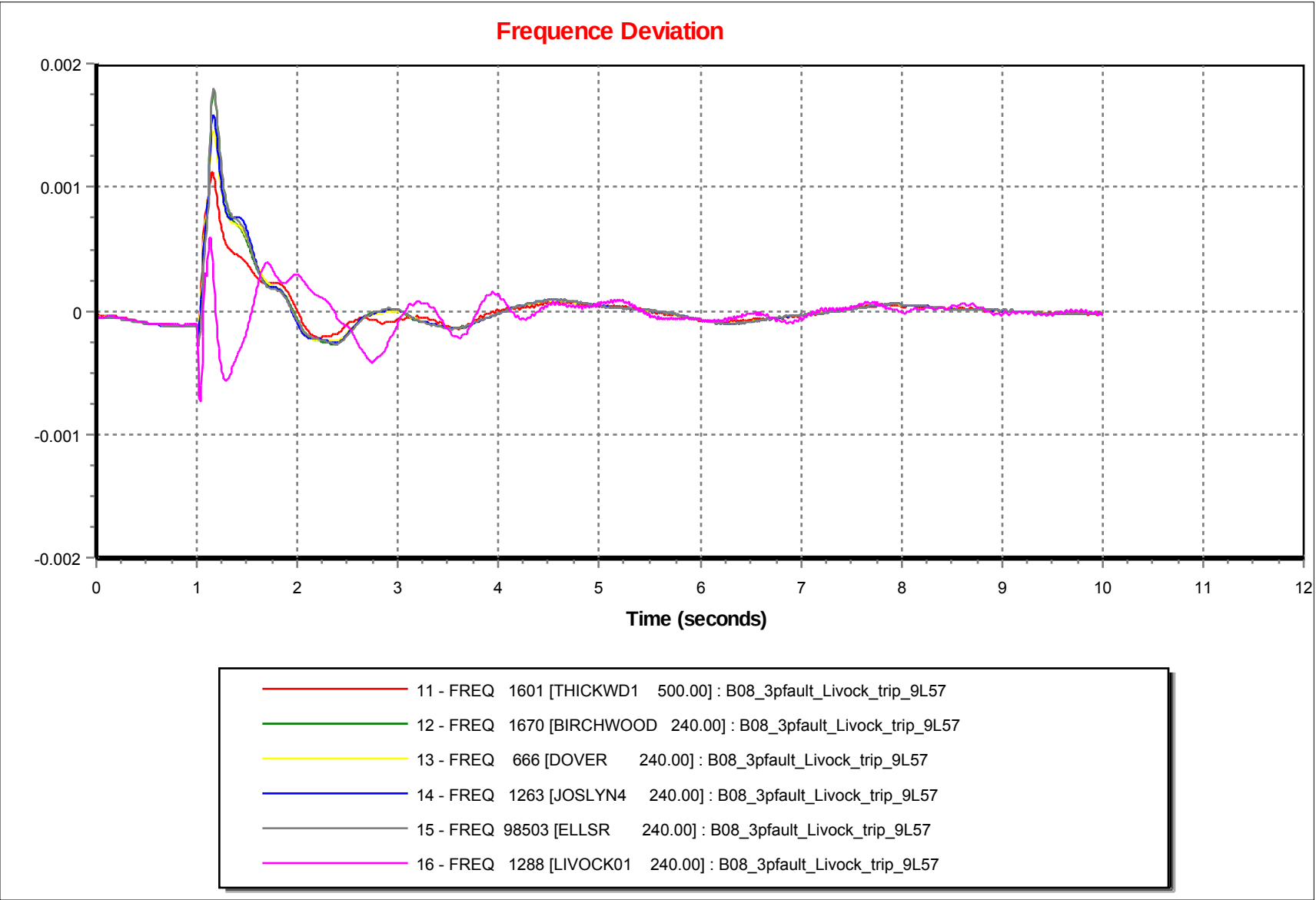
Frequence Deviation
0.002
0.001
0
-0.001
-0.002
0
1
2
3
4
5
6
7
8
9
10
11
12
Time (seconds)
11 - FREQ 1601 [THICKWD1 500.00] : B08_3pfault_Livock_trip_9L57
12 - FREQ 1670 [BIRCHWOOD 240.00] : B08_3pfault_Livock_trip_9L57
13 - FREQ 666 [DOVER 240.00] : B08_3pfault_Livock_trip_9L57
14 - FREQ 1263 [JOSLYN4 240.00] : B08_3pfault_Livock_trip_9L57
15 - FREQ 98503 [ELLSR 240.00] : B08_3pfault_Livock_trip_9L57
16 - FREQ 1288 [LIVOCK01 240.00] : B08_3pfault_Livock_trip_9L57

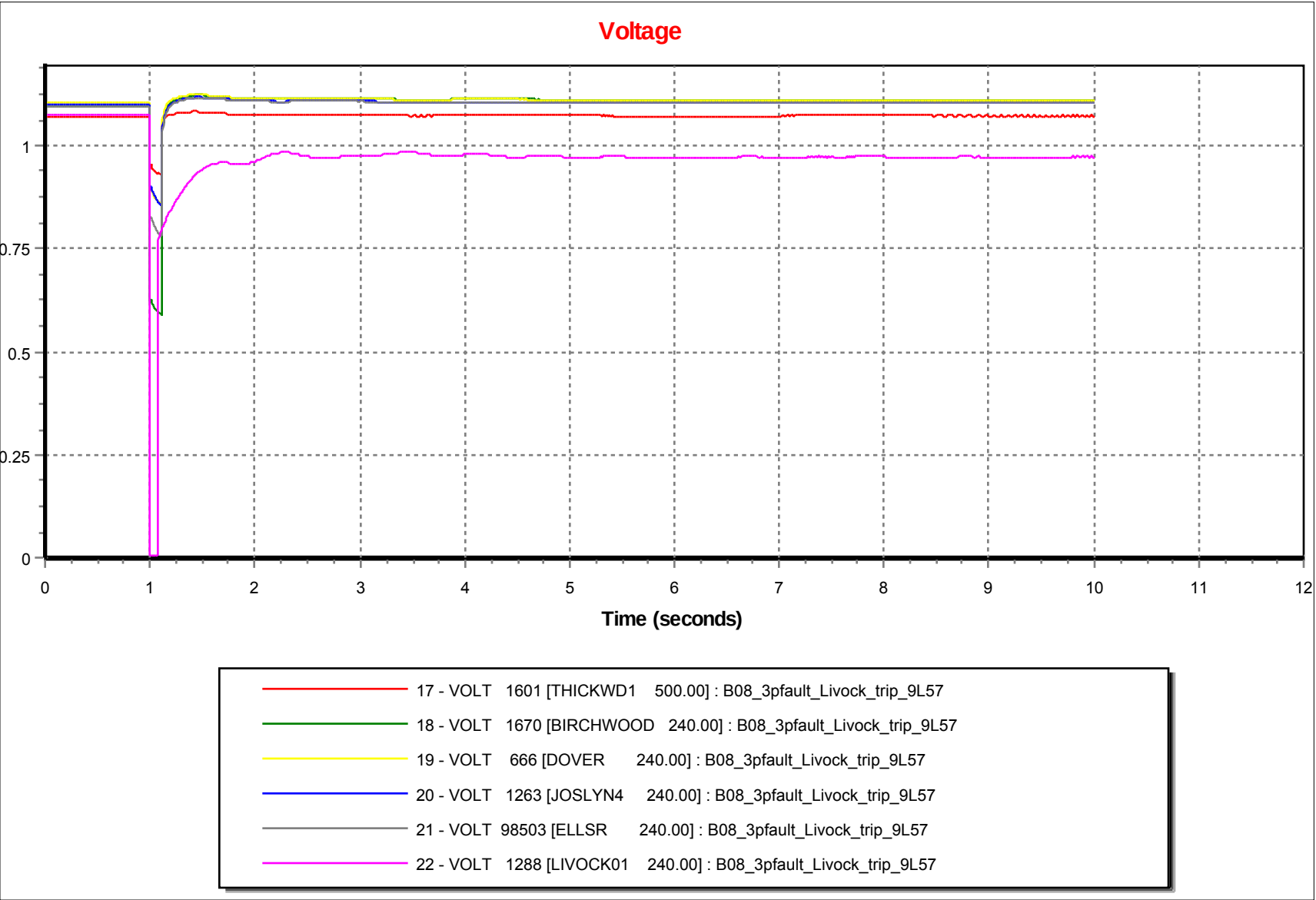
Voltage
1
0.75
0.5
0.25
0
0
1
2
3
4
5
6
7
8
9
10
11
12
Time (seconds)
17 - VOLT 1601 [THICKWD1 500.00] : B08_3pfault_Livock_trip_9L57
18 - VOLT 1670 [BIRCHWOOD 240.00] : B08_3pfault_Livock_trip_9L57
19 - VOLT 666 [DOVER 240.00] : B08_3pfault_Livock_trip_9L57
20 - VOLT 1263 [JOSLYN4 240.00] : B08_3pfault_Livock_trip_9L57
21 - VOLT 98503 [ELLSR 240.00] : B08_3pfault_Livock_trip_9L57
22 - VOLT 1288 [LIVOCK01 240.00] : B08_3pfault_Livock_trip_9L57

Relative Machine Angle

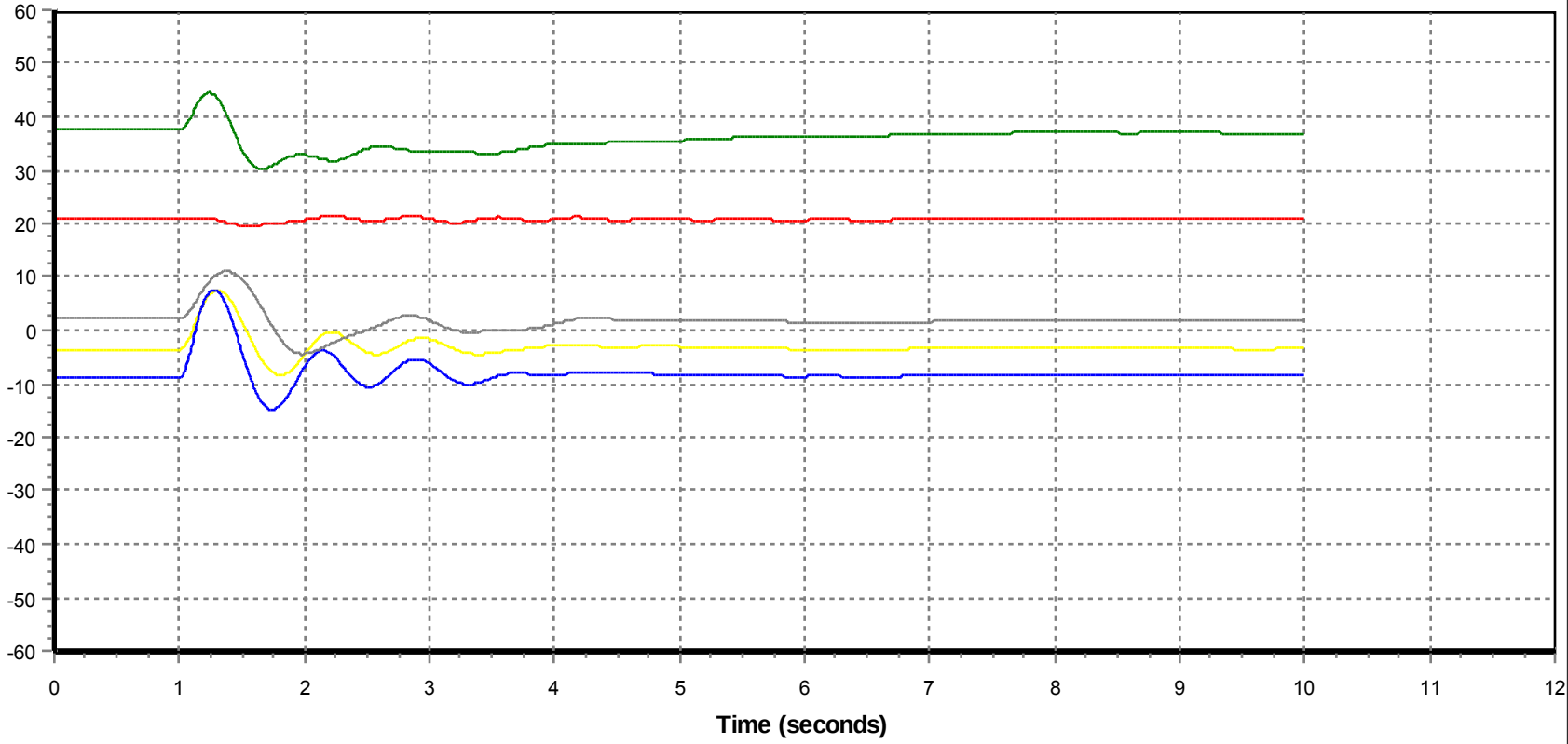

1 - ANGL 424[KEEP#2GN 19.000]2 : B09_3pfault_BW_trip_9L95

2 - ANGL 18274[MACKAY2 18.000]1 : B09_3pfault_BW_trip_9L95

3 - ANGL 3745[DOVERN 13.800]G1 : B09_3pfault_BW_trip_9L95

4 - ANGL 19669[MRCP 13.800]1 : B09_3pfault_BW_trip_9L95

5 - ANGL 10236[MUSKEG4 13.800]1 : B09_3pfault_BW_trip_9L95

Machine Power

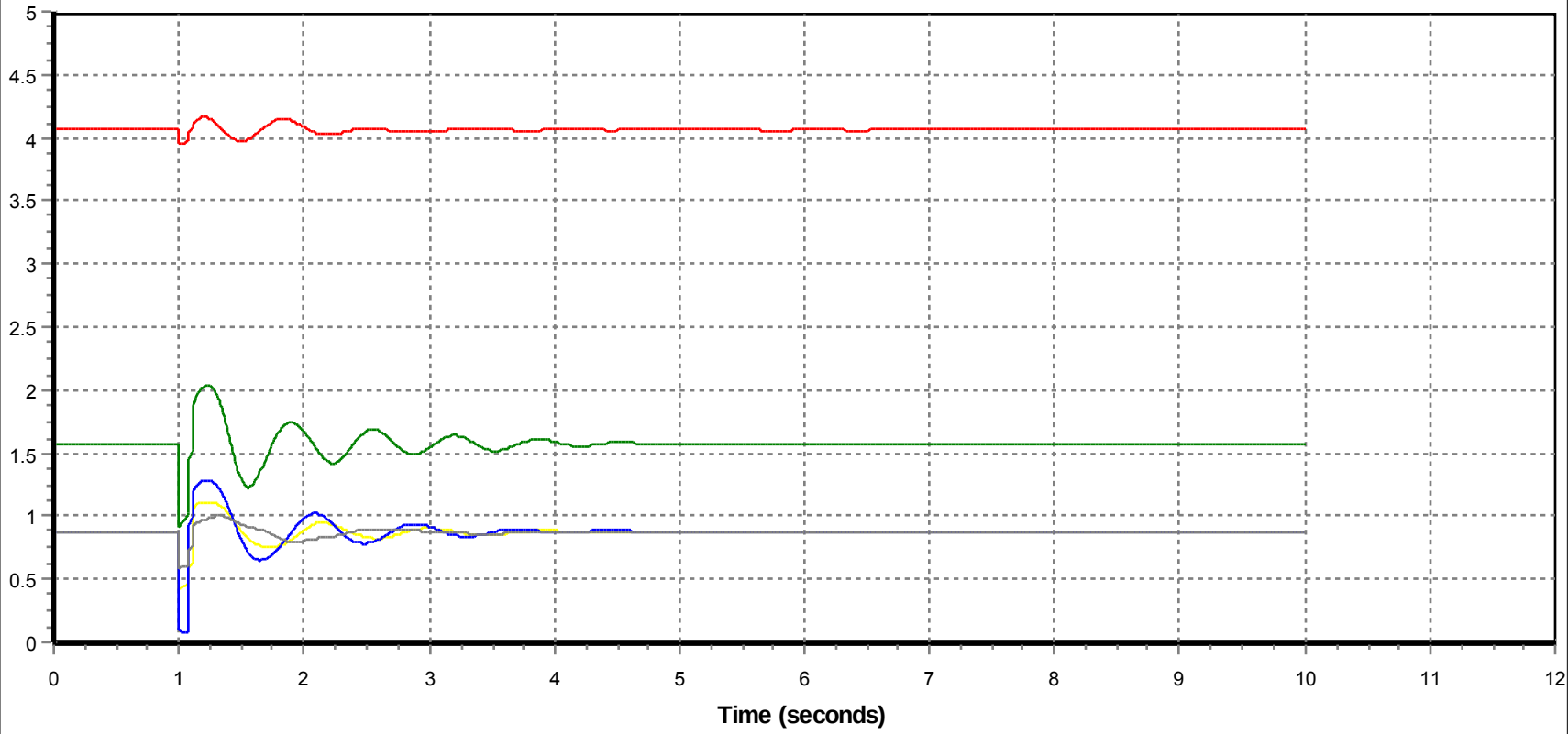

6 - POWR 424[KEEP#2GN 19.000]2 : B09_3pfault_BW_trip_9L95

7 - POWR 18274[MACKAY2 18.000]1 : B09_3pfault_BW_trip_9L95

8 - POWR 3745[DOVERN 13.800]G1 : B09_3pfault_BW_trip_9L95

9 - POWR 19669[MRCP 13.800]1 : B09_3pfault_BW_trip_9L95

10 - POWR 10236[MUSKEG4 13.800]1 : B09_3pfault_BW_trip_9L95

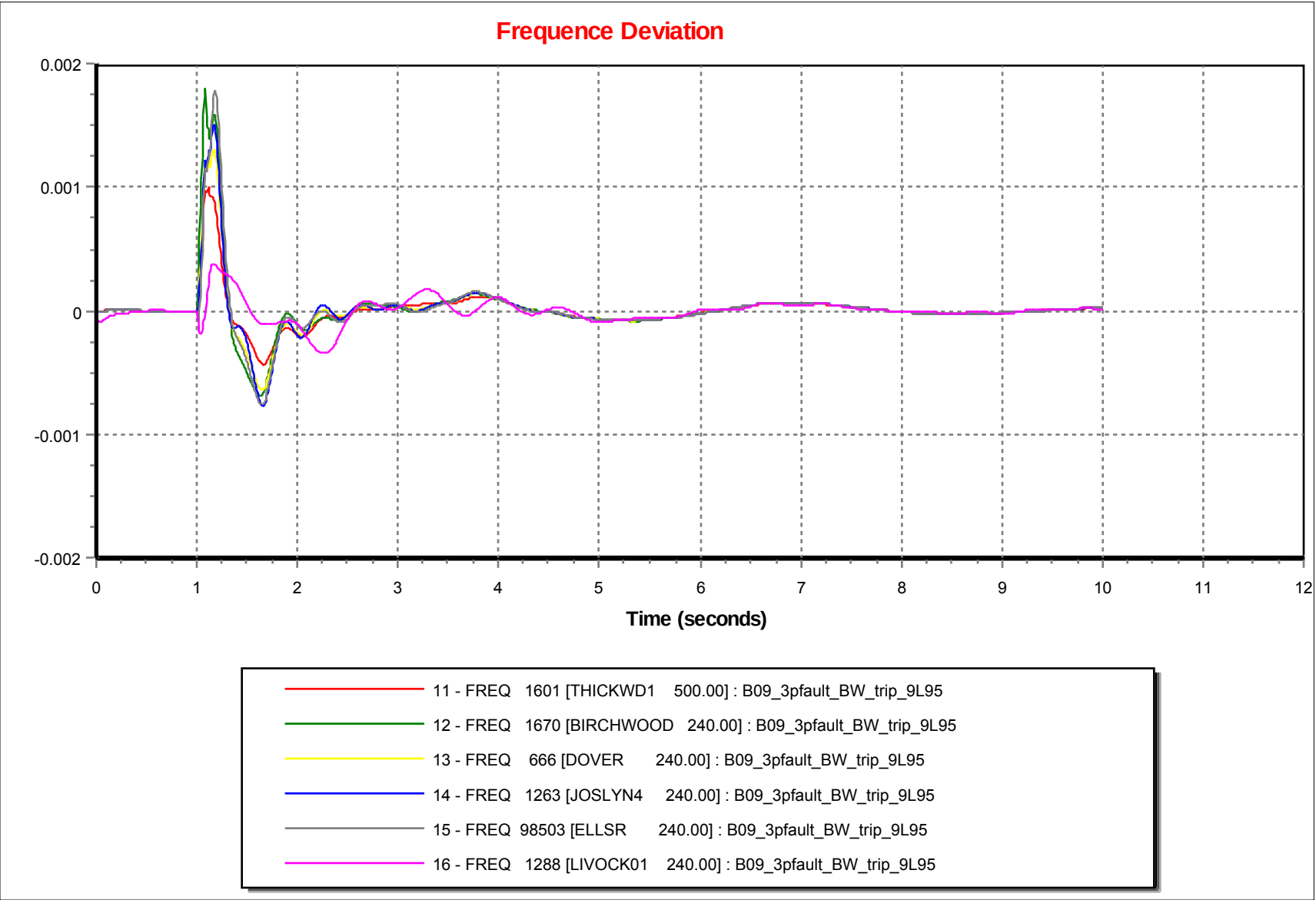
Frequence Deviation
0.002
0.001
0
-0.001
-0.002
0
1
2
3
4
5
6
7
8
9
10
11
12
Time (seconds)
11 - FREQ 1601 [THICKWD1 500.00] : B09_3pfault_BW_trip_9L95
12 - FREQ 1670 [BIRCHWOOD 240.00] : B09_3pfault_BW_trip_9L95
13 - FREQ 666 [DOVER 240.00] : B09_3pfault_BW_trip_9L95
14 - FREQ 1263 [JOSLYN4 240.00] : B09_3pfault_BW_trip_9L95
15 - FREQ 98503 [ELLSR 240.00] : B09_3pfault_BW_trip_9L95
16 - FREQ 1288 [LIVOCK01 240.00] : B09_3pfault_BW_trip_9L95

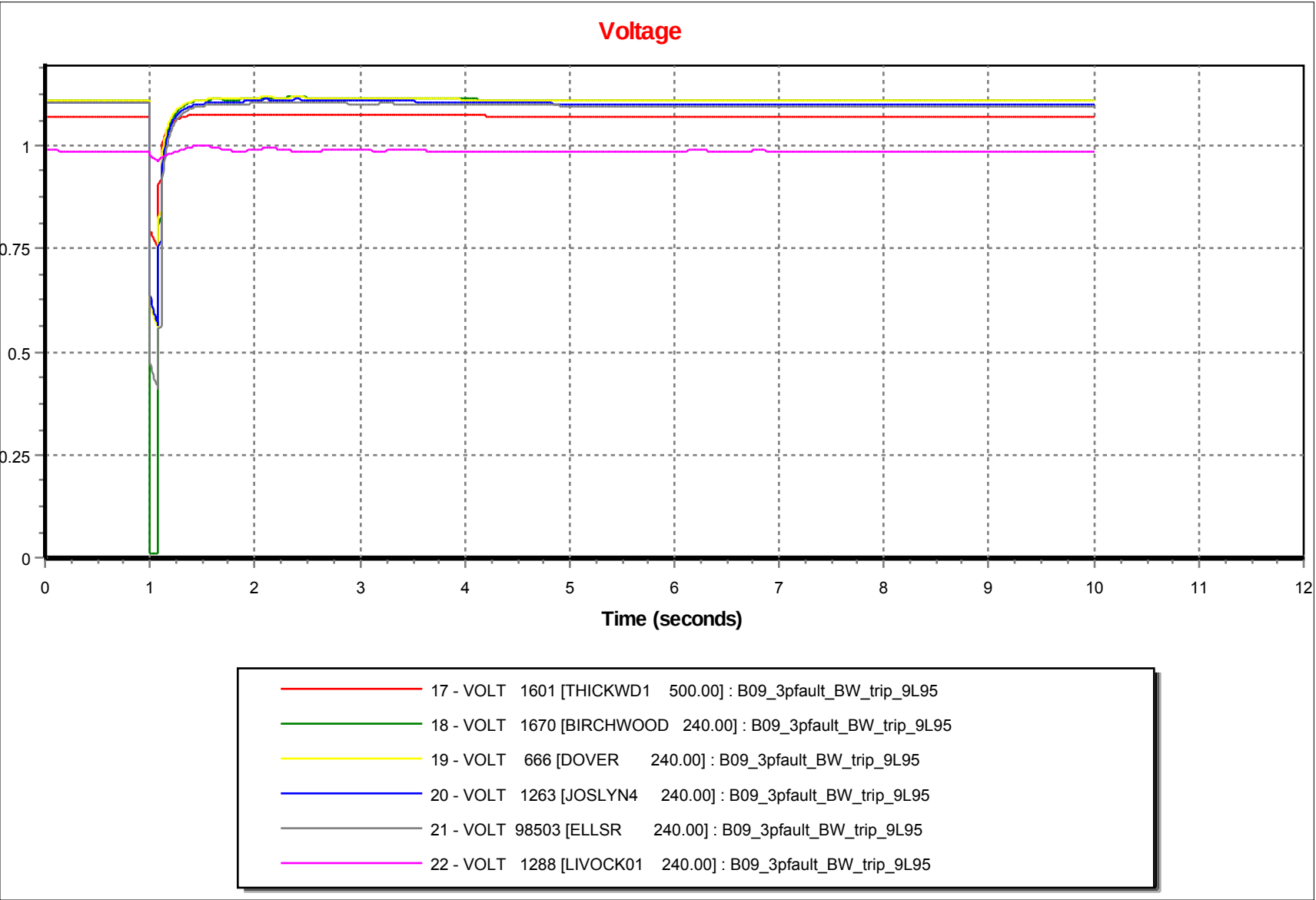
Voltage
1
0.75
0.5
0.25
0
0
1
2
3
4
5
6
7
8
9
10
11
12
Time (seconds)
17 - VOLT 1601 [THICKWD1 500.00] : B09_3pfault_BW_trip_9L95
18 - VOLT 1670 [BIRCHWOOD 240.00] : B09_3pfault_BW_trip_9L95
19 - VOLT 666 [DOVER 240.00] : B09_3pfault_BW_trip_9L95
20 - VOLT 1263 [JOSLYN4 240.00] : B09_3pfault_BW_trip_9L95
21 - VOLT 98503 [ELLSR 240.00] : B09_3pfault_BW_trip_9L95
22 - VOLT 1288 [LIVOCK01 240.00] : B09_3pfault_BW_trip_9L95

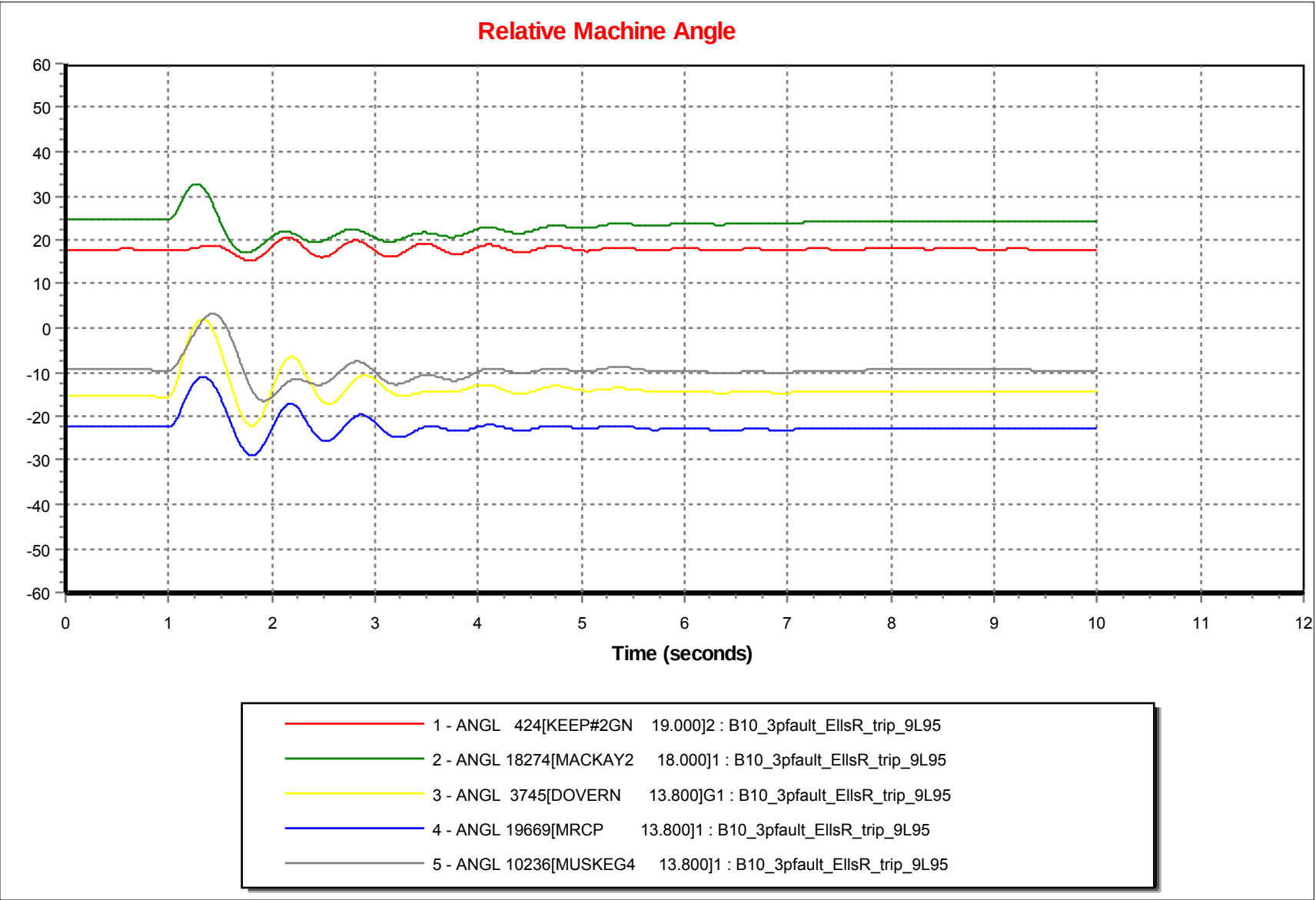
Relative Machine Angle
60
50
40
30
20
10
0
-10
-20
-30
-40
-50
-60
0
1
2
3
4
5
6
7
8
9
10
11
12
Time (seconds)
1 - ANGL 424[KEEP#2GN 19.000]2 : B10_3pfault_EllsR_trip_9L95
2 - ANGL 18274[MACKAY2 18.000]1 : B10_3pfault_EllsR_trip_9L95
3 - ANGL 3745[DOVERN 13.800]G1 : B10_3pfault_EllsR_trip_9L95
4 - ANGL 19669[MRCP 13.800]1 : B10_3pfault_EllsR_trip_9L95
5 - ANGL 10236[MUSKEG4 13.800]1 : B10_3pfault_EllsR_trip_9L95

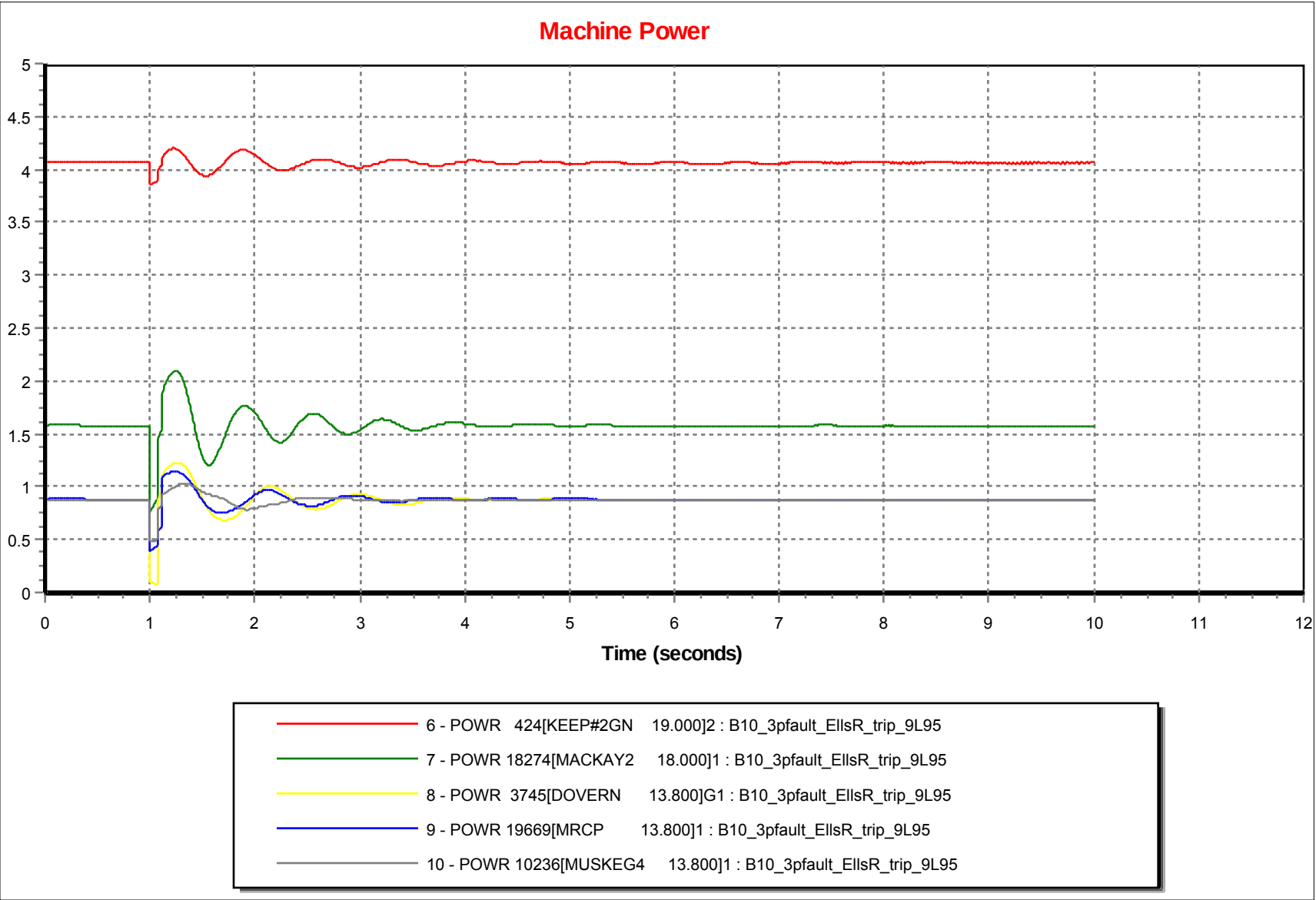
Machine Power
5
4.5
4
3.5
3
2.5
2
1.5
1
0.5
0
0
1
2
3
4
5
6
7
8
9
10
11
12
Time (seconds)
6 - POWR 424[KEEP#2GN 19.000]2 : B10_3pfault_EllsR_trip_9L95
7 - POWR 18274[MACKAY2 18.000]1 : B10_3pfault_EllsR_trip_9L95
8 - POWR 3745[DOVERN 13.800]G1 : B10_3pfault_EllsR_trip_9L95
9 - POWR 19669[MRCP 13.800]1 : B10_3pfault_EllsR_trip_9L95
10 - POWR 10236[MUSKEG4 13.800]1 : B10_3pfault_EllsR_trip_9L95

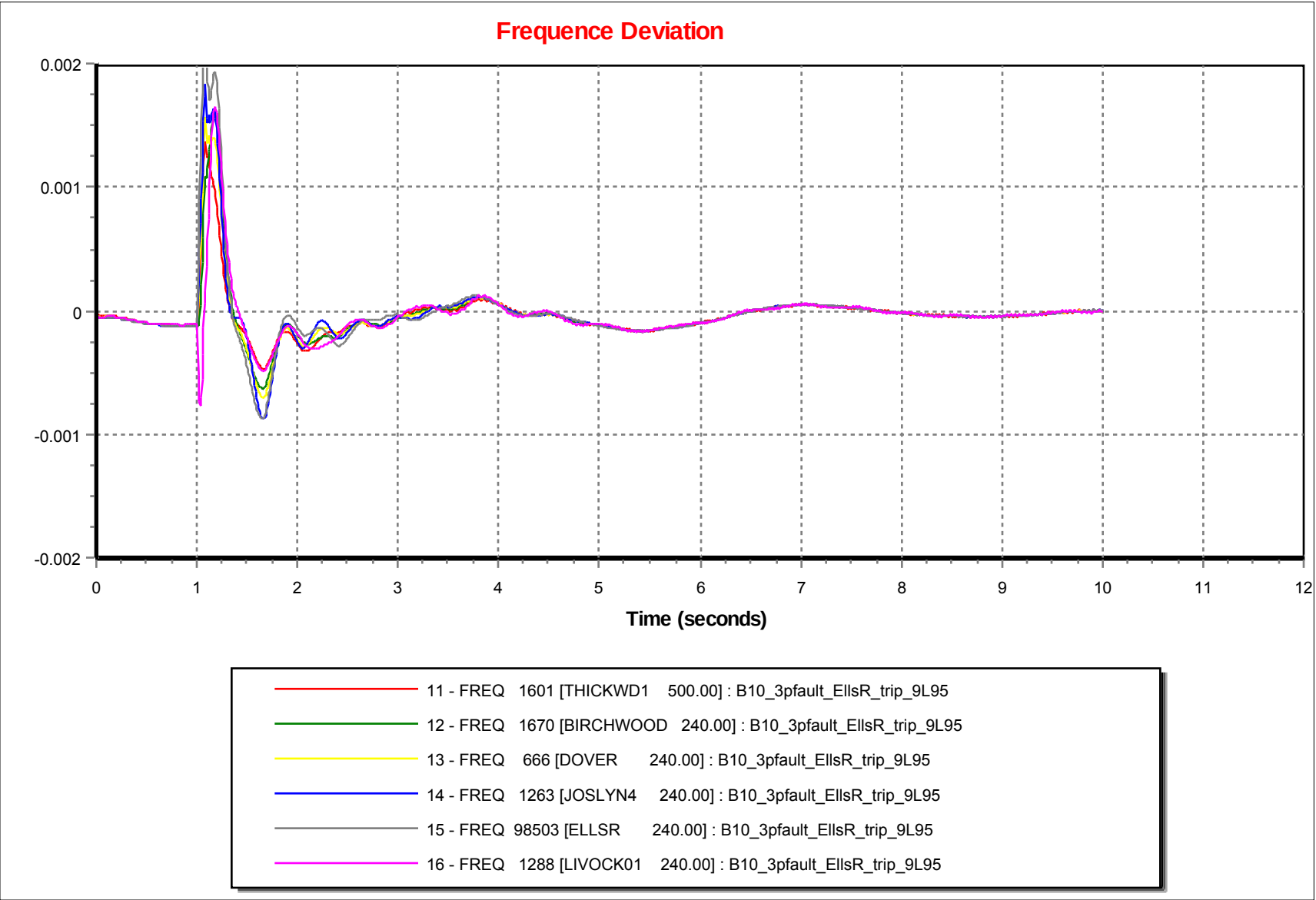
Frequence Deviation
0.002
0.001
0
-0.001
-0.002
0
1
2
3
4
5
6
7
8
9
10
11
12
Time (seconds)
11 - FREQ 1601 [THICKWD1 500.00] : B10_3pfault_EllsR_trip_9L95
12 - FREQ 1670 [BIRCHWOOD 240.00] : B10_3pfault_EllsR_trip_9L95
13 - FREQ 666 [DOVER 240.00] : B10_3pfault_EllsR_trip_9L95
14 - FREQ 1263 [JOSLYN4 240.00] : B10_3pfault_EllsR_trip_9L95
15 - FREQ 98503 [ELLSR 240.00] : B10_3pfault_EllsR_trip_9L95
16 - FREQ 1288 [LIVOCK01 240.00] : B10_3pfault_EllsR_trip_9L95

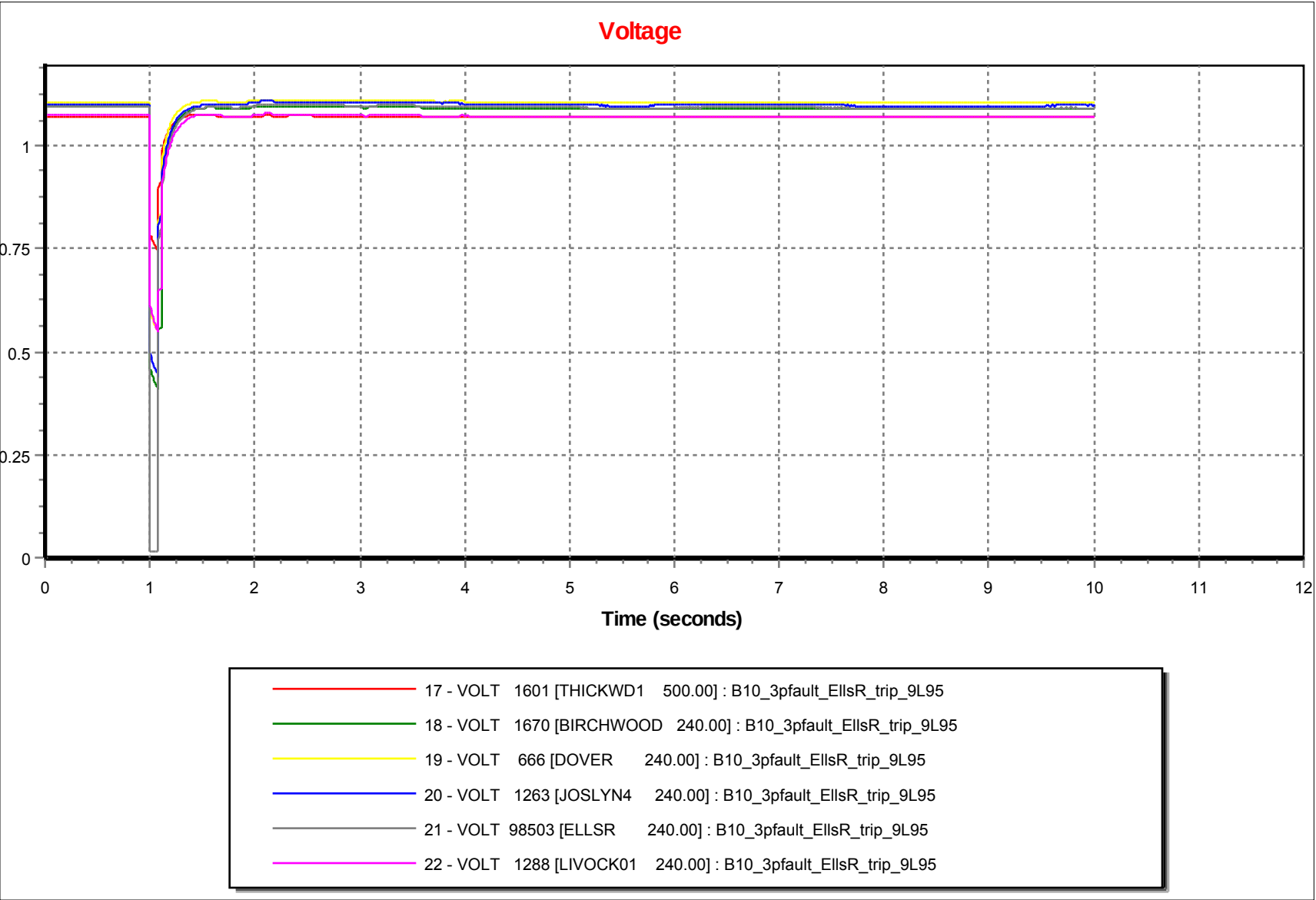
Voltage
1
0.75
0.5
0.25
0
0
1
2
3
4
5
6
7
8
9
10
11
12
Time (seconds)
17 - VOLT 1601 [THICKWD1 500.00] : B10_3pfault_EllsR_trip_9L95
18 - VOLT 1670 [BIRCHWOOD 240.00] : B10_3pfault_EllsR_trip_9L95
19 - VOLT 666 [DOVER 240.00] : B10_3pfault_EllsR_trip_9L95
20 - VOLT 1263 [JOSLYN4 240.00] : B10_3pfault_EllsR_trip_9L95
21 - VOLT 98503 [ELLSR 240.00] : B10_3pfault_EllsR_trip_9L95
22 - VOLT 1288 [LIVOCK01 240.00] : B10_3pfault_EllsR_trip_9L95

Relative Machine Angle

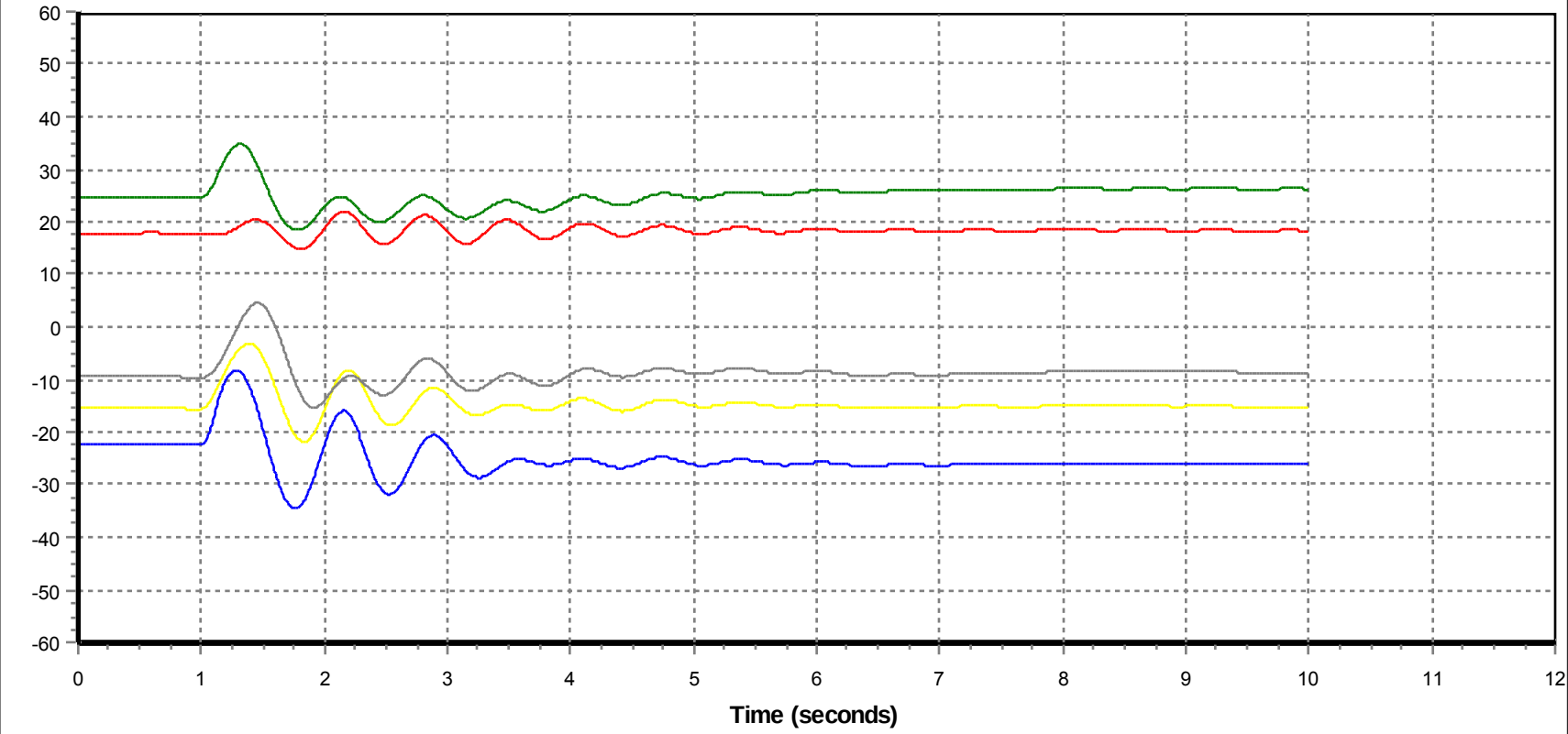

1 - ANGL 424[KEEP#2GN 19.000]2 : B11_3pfault_BW_trip_9L74

2 - ANGL 18274[MACKAY2 18.000]1 : B11_3pfault_BW_trip_9L74

3 - ANGL 3745[DOVERN 13.800]G1 : B11_3pfault_BW_trip_9L74

4 - ANGL 19669[MRCP 13.800]1 : B11_3pfault_BW_trip_9L74

5 - ANGL 10236[MUSKEG4 13.800]1 : B11_3pfault_BW_trip_9L74

Machine Power

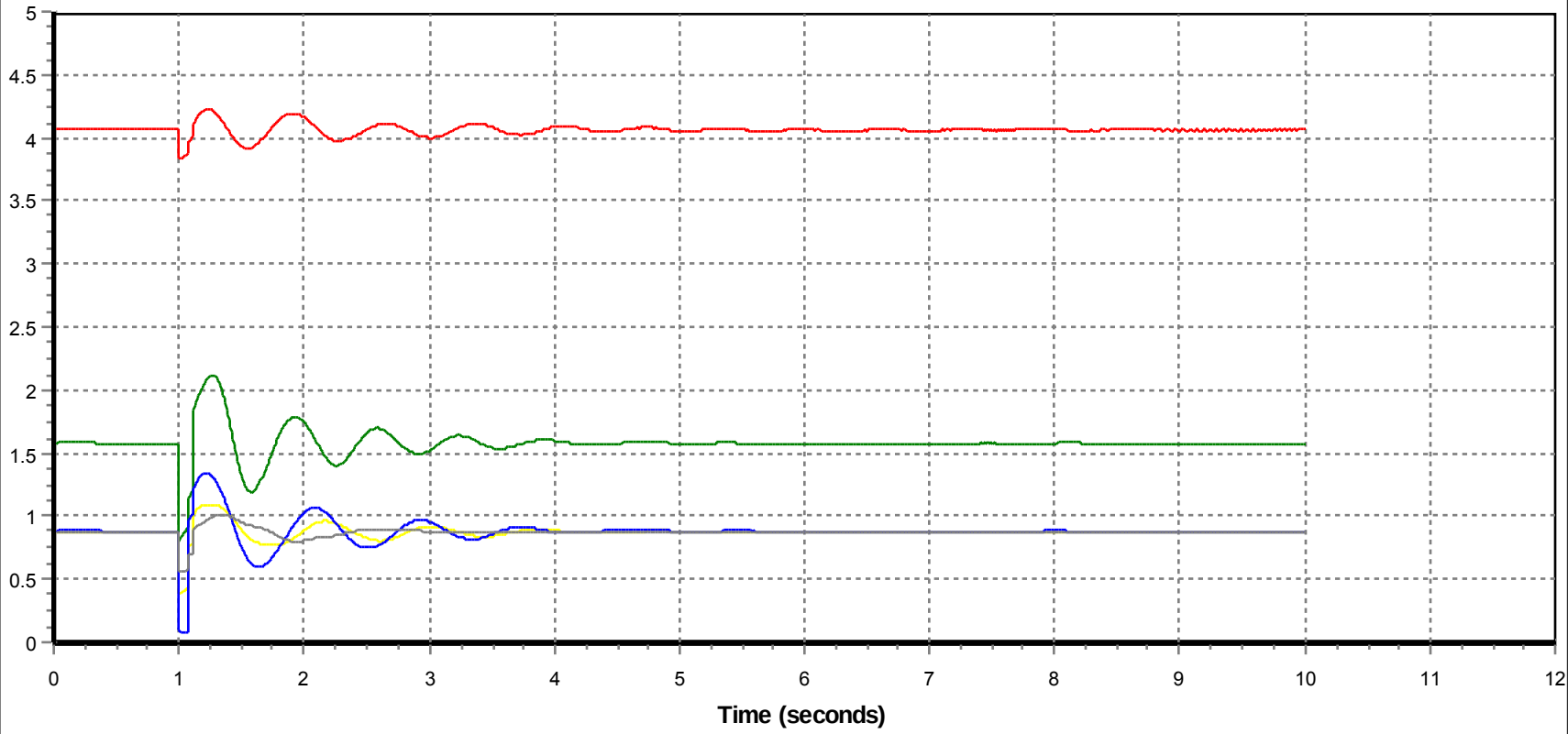

6 - POWR 424[KEEP#2GN 19.000]2 : B11_3pfault_BW_trip_9L74

7 - POWR 18274[MACKAY2 18.000]1 : B11_3pfault_BW_trip_9L74

8 - POWR 3745[DOVERN 13.800]G1 : B11_3pfault_BW_trip_9L74

9 - POWR 19669[MRCP 13.800]1 : B11_3pfault_BW_trip_9L74

10 - POWR 10236[MUSKEG4 13.800]1 : B11_3pfault_BW_trip_9L74

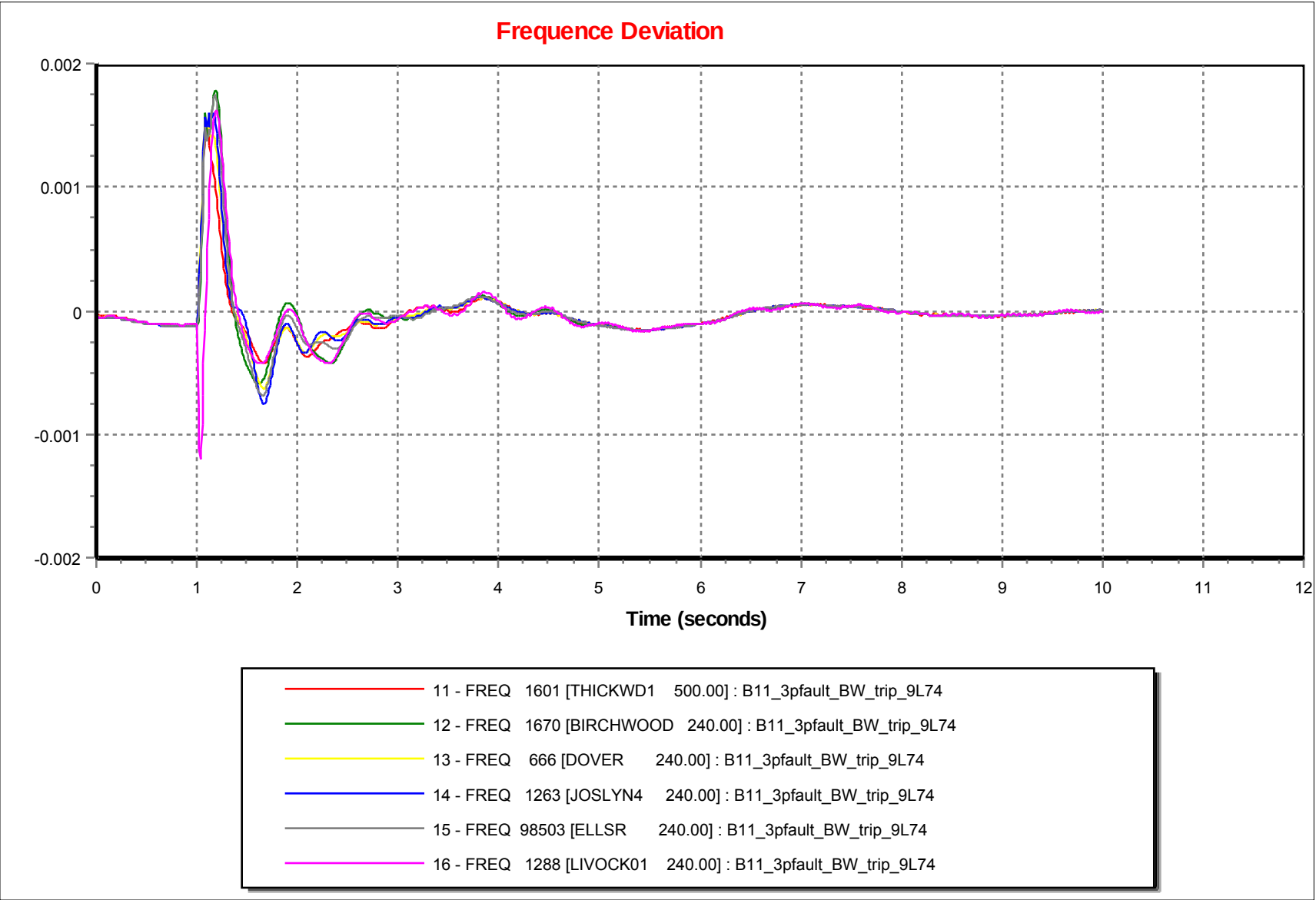
Frequence Deviation
0.002
0.001
0
-0.001
-0.002
0
1
2
3
4
5
6
7
8
9
10
11
12
Time (seconds)
11 - FREQ 1601 [THICKWD1 500.00] : B11_3pfault_BW_trip_9L74
12 - FREQ 1670 [BIRCHWOOD 240.00] : B11_3pfault_BW_trip_9L74
13 - FREQ 666 [DOVER 240.00] : B11_3pfault_BW_trip_9L74
14 - FREQ 1263 [JOSLYN4 240.00] : B11_3pfault_BW_trip_9L74
15 - FREQ 98503 [ELLSR 240.00] : B11_3pfault_BW_trip_9L74
16 - FREQ 1288 [LIVOCK01 240.00] : B11_3pfault_BW_trip_9L74

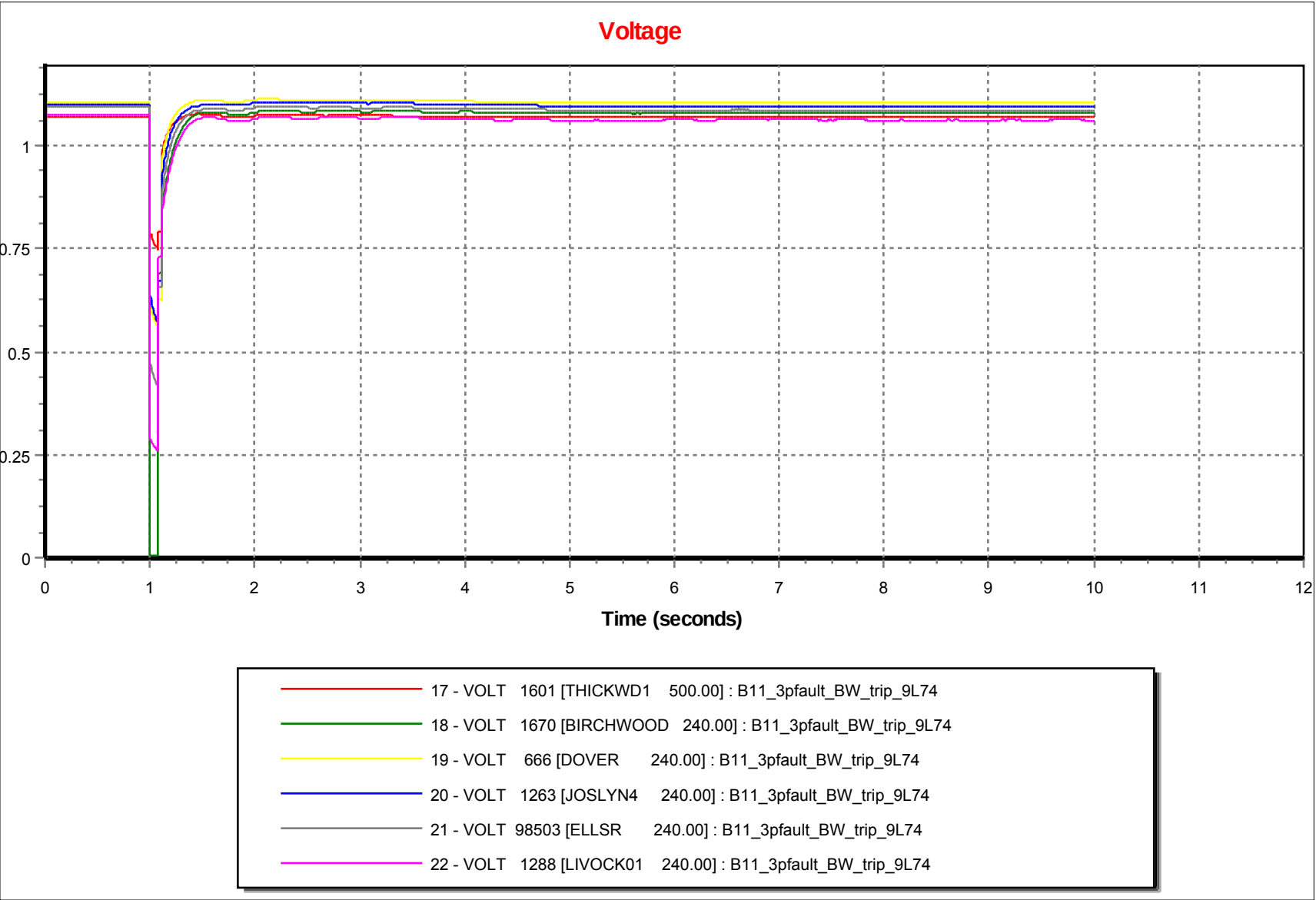
Voltage
1
0.75
0.5
0.25
0
0
1
2
3
4
5
6
7
8
9
10
11
12
Time (seconds)
17 - VOLT 1601 [THICKWD1 500.00] : B11_3pfault_BW_trip_9L74
18 - VOLT 1670 [BIRCHWOOD 240.00] : B11_3pfault_BW_trip_9L74
19 - VOLT 666 [DOVER 240.00] : B11_3pfault_BW_trip_9L74
20 - VOLT 1263 [JOSLYN4 240.00] : B11_3pfault_BW_trip_9L74
21 - VOLT 98503 [ELLSR 240.00] : B11_3pfault_BW_trip_9L74
22 - VOLT 1288 [LIVOCK01 240.00] : B11_3pfault_BW_trip_9L74

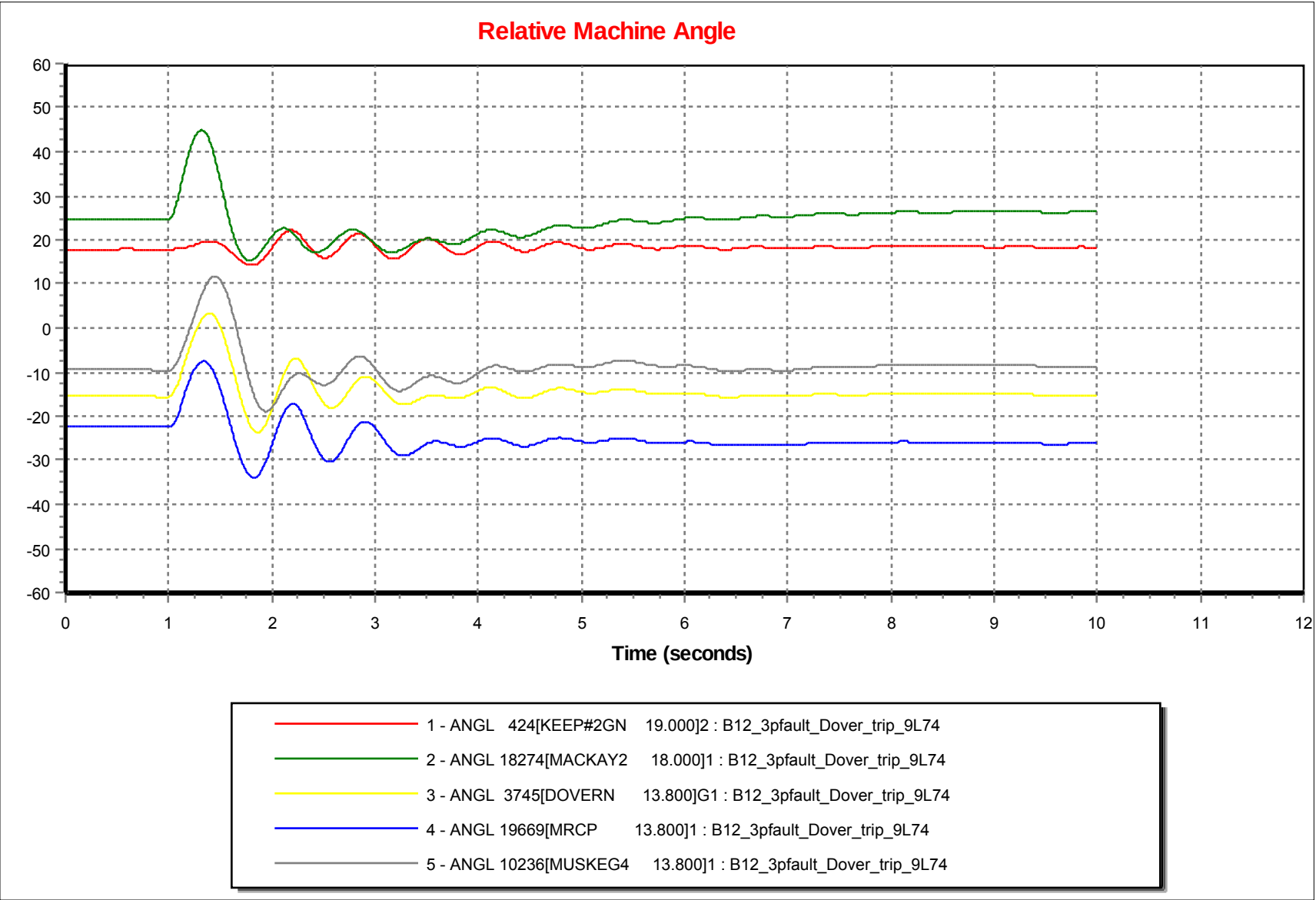
Relative Machine Angle
60
50
40
30
20
10
0
-10
-20
-30
-40
-50
-60
0
1
2
3
4
5
6
7
8
9
10
11
12
Time (seconds)
1 - ANGL 424[KEEP#2GN 19.000]2 : B12_3pfault_Dover_trip_9L74
2 - ANGL 18274[MACKAY2 18.000]1 : B12_3pfault_Dover_trip_9L74
3 - ANGL 3745[DOVERN 13.800]G1 : B12_3pfault_Dover_trip_9L74
4 - ANGL 19669[MRCP 13.800]1 : B12_3pfault_Dover_trip_9L74
5 - ANGL 10236[MUSKEG4 13.800]1 : B12_3pfault_Dover_trip_9L74

Machine Power

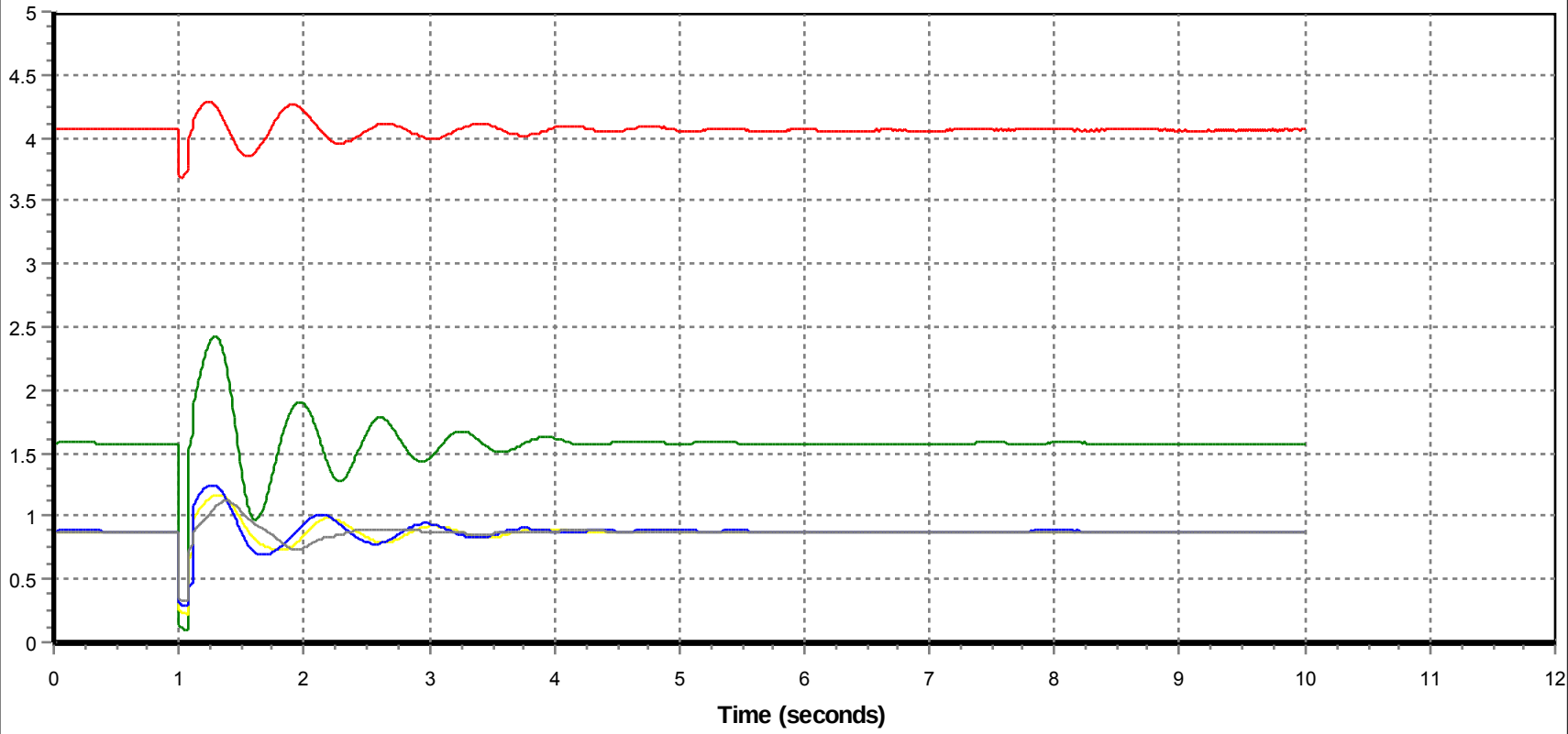

6 - POWR 424[KEEP#2GN 19.000]2 : B12_3pfault_Dover_trip_9L74

7 - POWR 18274[MACKAY2 18.000]1 : B12_3pfault_Dover_trip_9L74

8 - POWR 3745[DOVERN 13.800]G1 : B12_3pfault_Dover_trip_9L74

9 - POWR 19669[MRCP 13.800]1 : B12_3pfault_Dover_trip_9L74

10 - POWR 10236[MUSKEG4 13.800]1 : B12_3pfault_Dover_trip_9L74

Frequence Deviation

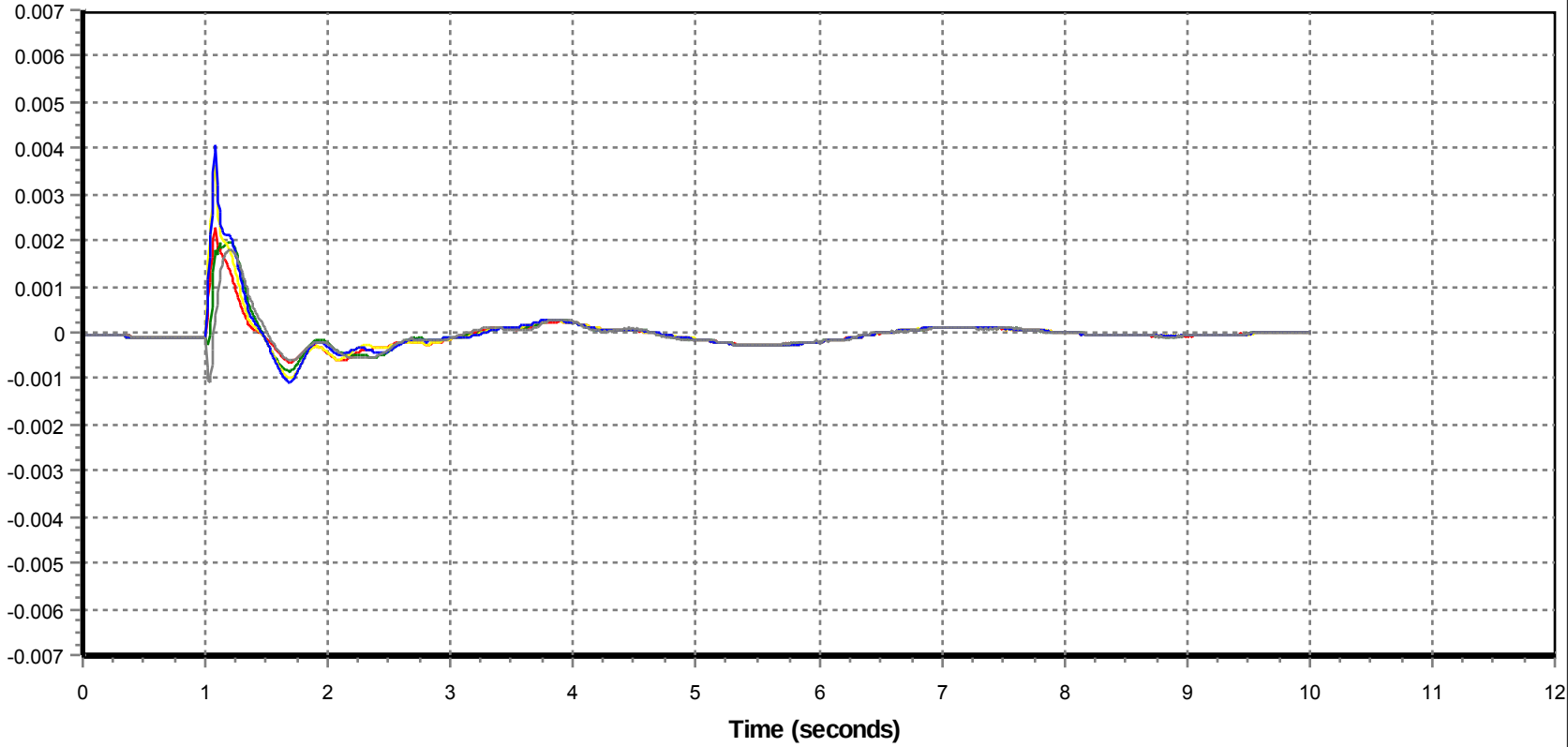

11 - FREQ 1601 [THICKWD1 500.00] : B12_3pfault_Dover_trip_9L74

12 - FREQ 1670 [BIRCHWOOD 240.00] : B12_3pfault_Dover_trip_9L74

13 - FREQ 666 [DOVER 240.00] : B12_3pfault_Dover_trip_9L74

15 - FREQ 98503 [ELLSR 240.00] : B12_3pfault_Dover_trip_9L74

16 - FREQ 1288 [LIVOCK01 240.00] : B12_3pfault_Dover_trip_9L74

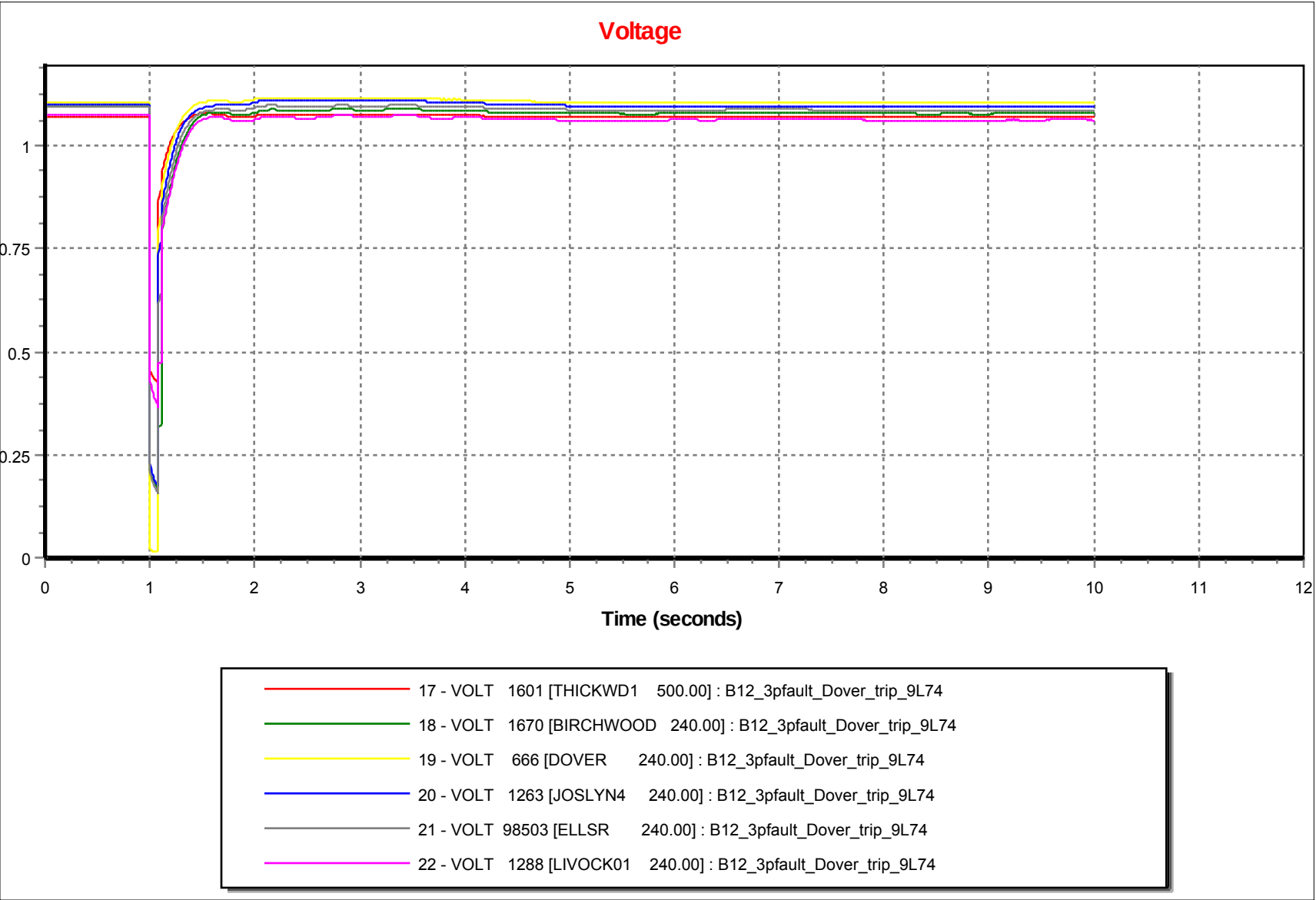
Voltage
1
0.75
0.5
0.25
0
0
1
2
3
4
5
6
7
8
9
10
11
12
Time (seconds)
17 - VOLT 1601 [THICKWD1 500.00] : B12_3pfault_Dover_trip_9L74
18 - VOLT 1670 [BIRCHWOOD 240.00] : B12_3pfault_Dover_trip_9L74
19 - VOLT 666 [DOVER 240.00] : B12_3pfault_Dover_trip_9L74
20 - VOLT 1263 [JOSLYN4 240.00] : B12_3pfault_Dover_trip_9L74
21 - VOLT 98503 [ELLSR 240.00] : B12_3pfault_Dover_trip_9L74
22 - VOLT 1288 [LIVOCK01 240.00] : B12_3pfault_Dover_trip_9L74

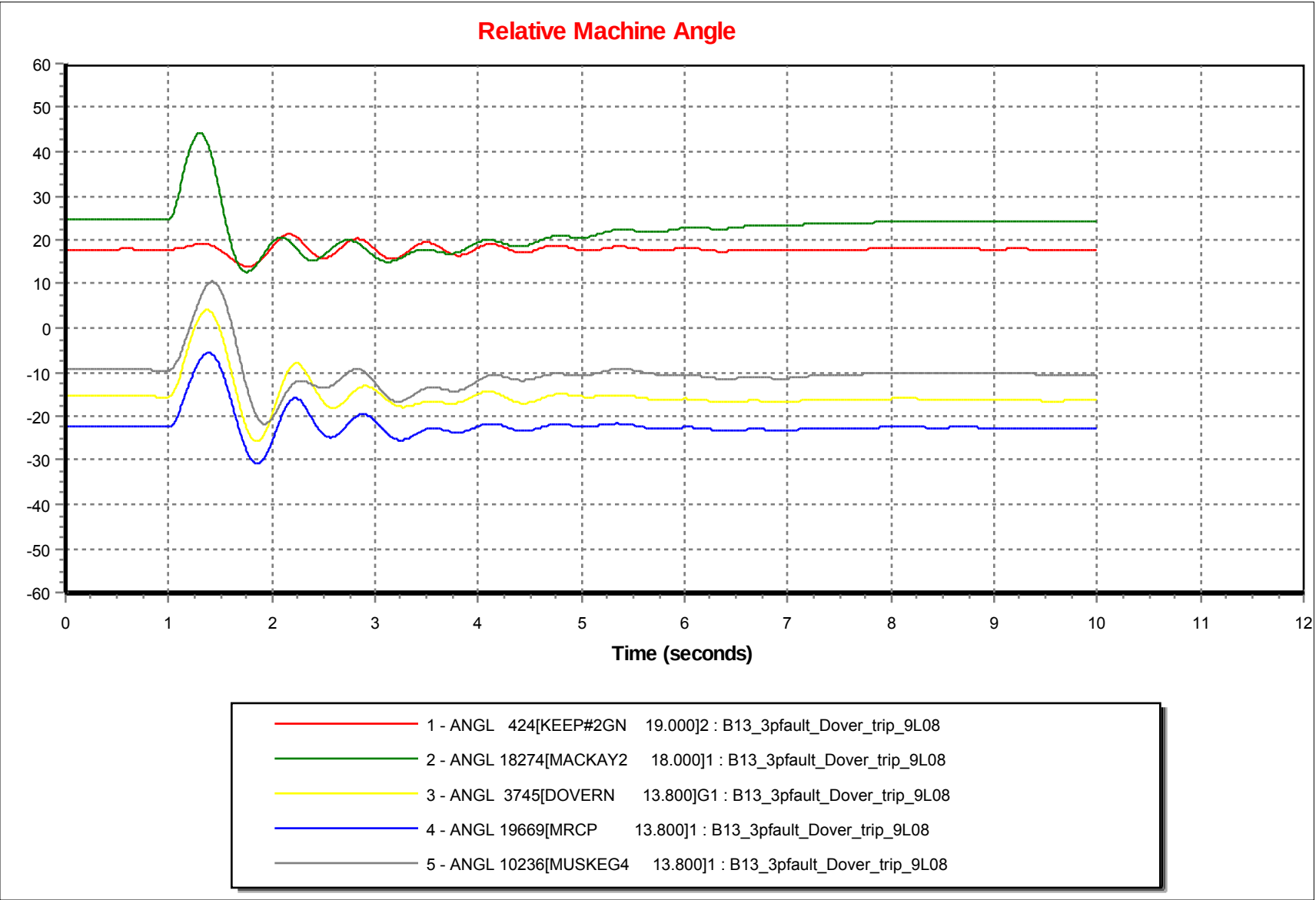
Relative Machine Angle
60
50
40
30
20
10
0
-10
-20
-30
-40
-50
-60
0
1
2
3
4
5
6
7
8
9
10
11
12
Time (seconds)
1 - ANGL 424[KEEP#2GN 19.000]2 : B13_3pfault_Dover_trip_9L08
2 - ANGL 18274[MACKAY2 18.000]1 : B13_3pfault_Dover_trip_9L08
3 - ANGL 3745[DOVERN 13.800]G1 : B13_3pfault_Dover_trip_9L08
4 - ANGL 19669[MRCP 13.800]1 : B13_3pfault_Dover_trip_9L08
5 - ANGL 10236[MUSKEG4 13.800]1 : B13_3pfault_Dover_trip_9L08

Machine Power

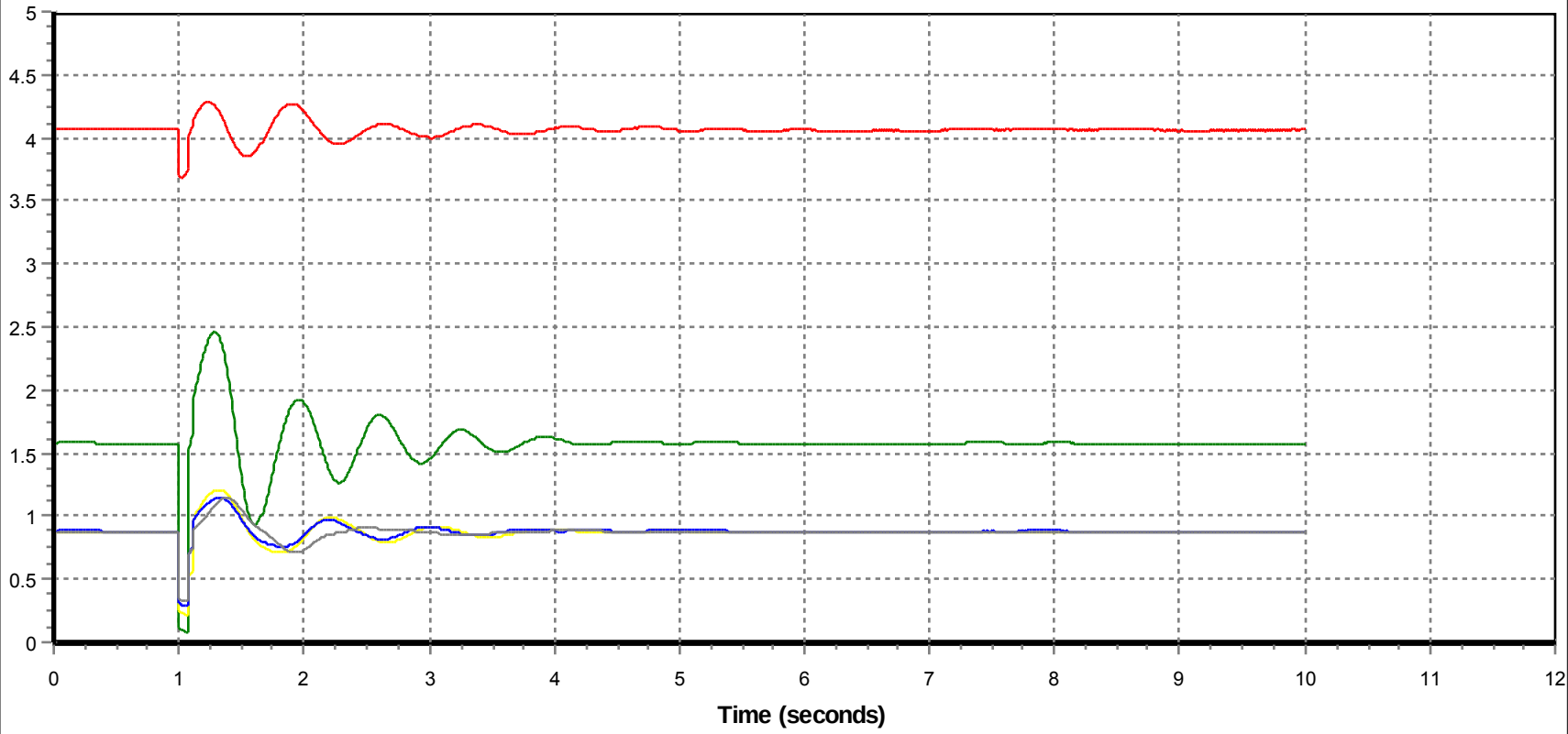

6 - POWR 424[KEEP#2GN 19.000]2 : B13_3pfault_Dover_trip_9L08

7 - POWR 18274[MACKAY2 18.000]1 : B13_3pfault_Dover_trip_9L08

8 - POWR 3745[DOVERN 13.800]G1 : B13_3pfault_Dover_trip_9L08

9 - POWR 19669[MRCP 13.800]1 : B13_3pfault_Dover_trip_9L08

10 - POWR 10236[MUSKEG4 13.800]1 : B13_3pfault_Dover_trip_9L08

Frequence Deviation

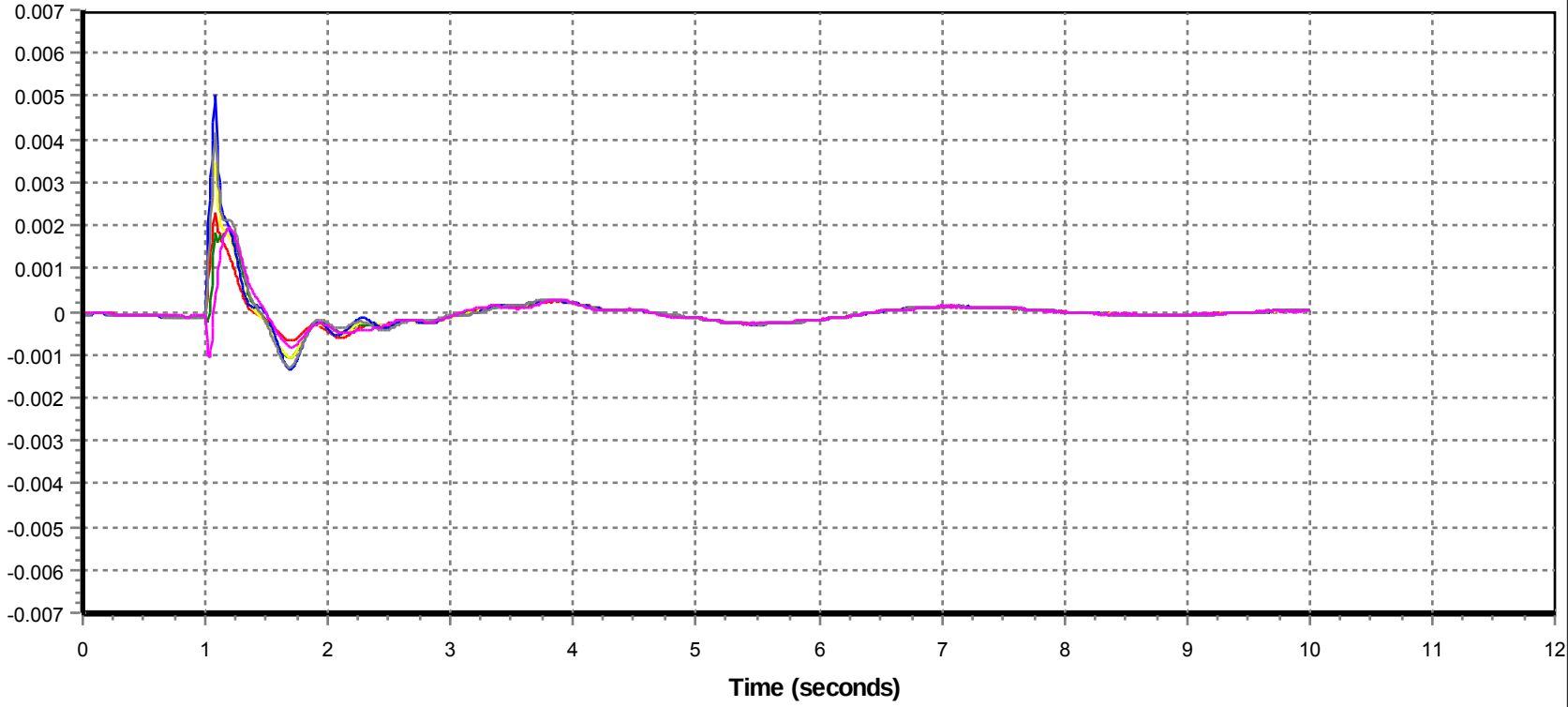

11 - FREQ 1601 [THICKWD1 500.00] : B13_3pfault_Dover_trip_9L08

12 - FREQ 1670 [BIRCHWOOD 240.00] : B13_3pfault_Dover_trip_9L08

13 - FREQ 666 [DOVER 240.00] : B13_3pfault_Dover_trip_9L08

14 - FREQ 1263 [JOSLYN4 240.00] : B13_3pfault_Dover_trip_9L08

15 - FREQ 98503 [ELLSR 240.00] : B13_3pfault_Dover_trip_9L08

16 - FREQ 1288 [LIVOCK01 240.00] : B13_3pfault_Dover_trip_9L08

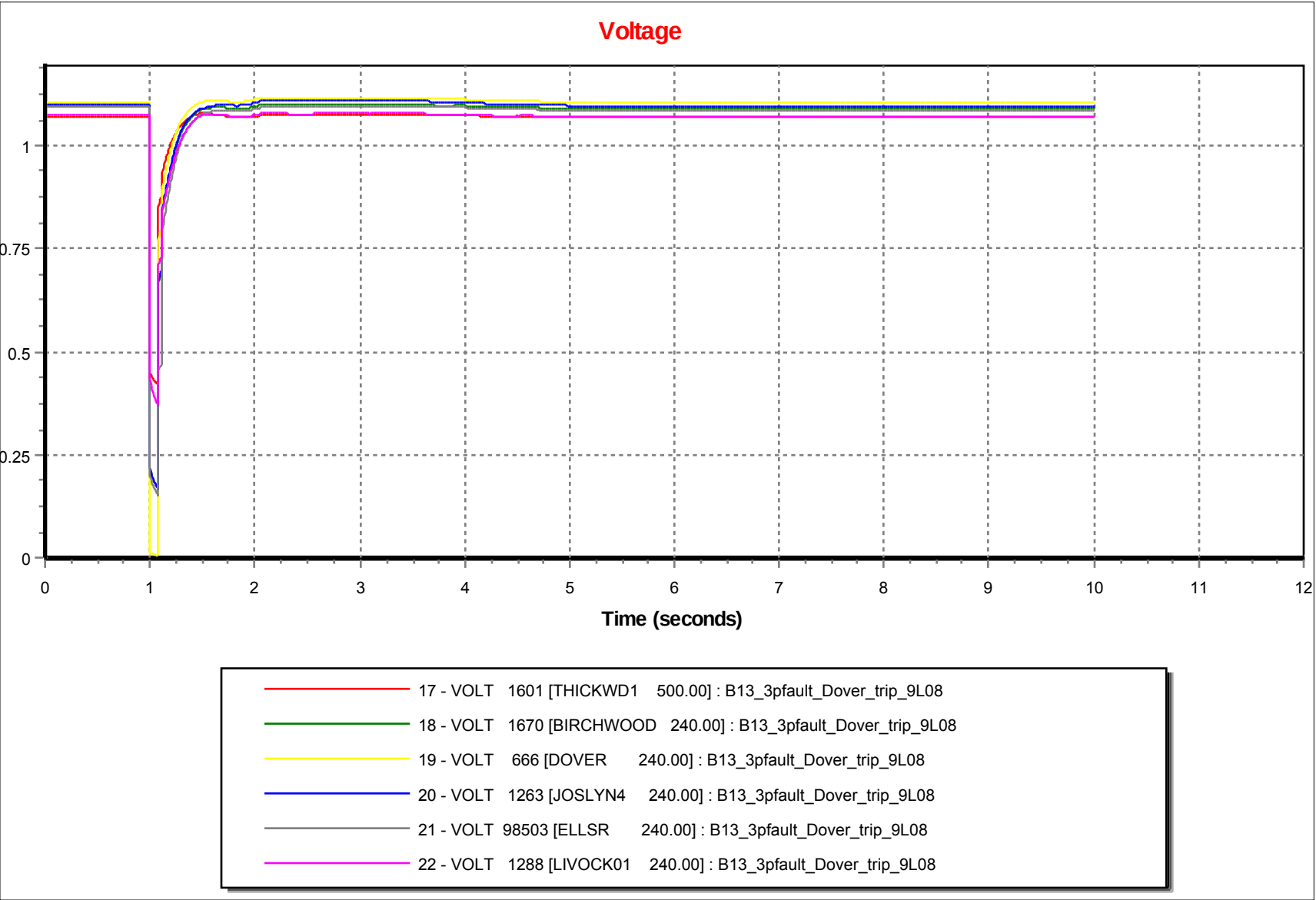
Voltage
1
0.75
0.5
0.25
0
0
1
2
3
4
5
6
7
8
9
10
11
12
Time (seconds)
17 - VOLT 1601 [THICKWD1 500.00] : B13_3pfault_Dover_trip_9L08
18 - VOLT 1670 [BIRCHWOOD 240.00] : B13_3pfault_Dover_trip_9L08
19 - VOLT 666 [DOVER 240.00] : B13_3pfault_Dover_trip_9L08
20 - VOLT 1263 [JOSLYN4 240.00] : B13_3pfault_Dover_trip_9L08
21 - VOLT 98503 [ELLSR 240.00] : B13_3pfault_Dover_trip_9L08
22 - VOLT 1288 [LIVOCK01 240.00] : B13_3pfault_Dover_trip_9L08

Relative Machine Angle

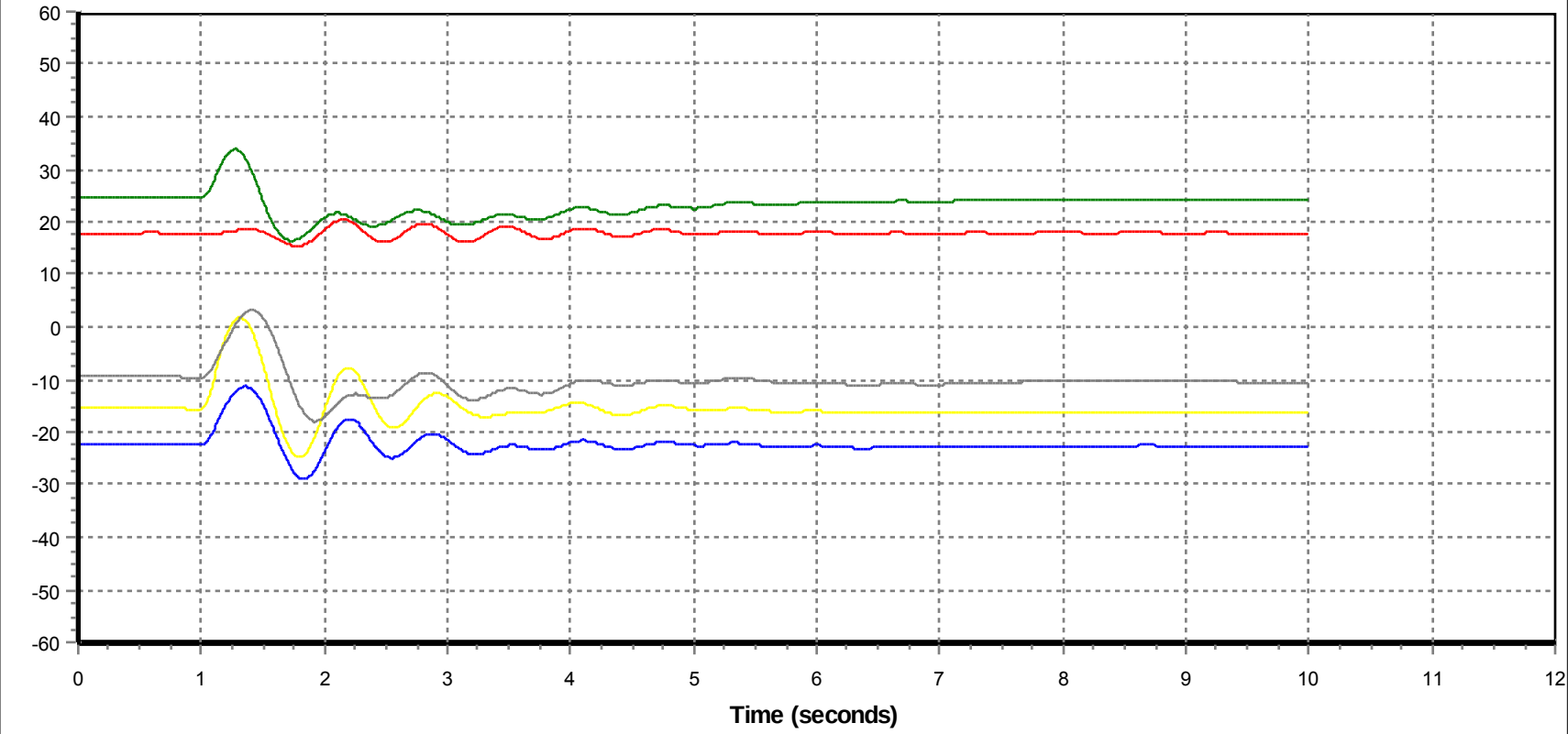

1 - ANGL 424[KEEP#2GN 19.000]2 : B14_3pfault_EllsR_trip_9L08

2 - ANGL 18274[MACKAY2 18.000]1 : B14_3pfault_EllsR_trip_9L08

3 - ANGL 3745[DOVERN 13.800]G1 : B14_3pfault_EllsR_trip_9L08

4 - ANGL 19669[MRCP 13.800]1 : B14_3pfault_EllsR_trip_9L08

5 - ANGL 10236[MUSKEG4 13.800]1 : B14_3pfault_EllsR_trip_9L08

Machine Power

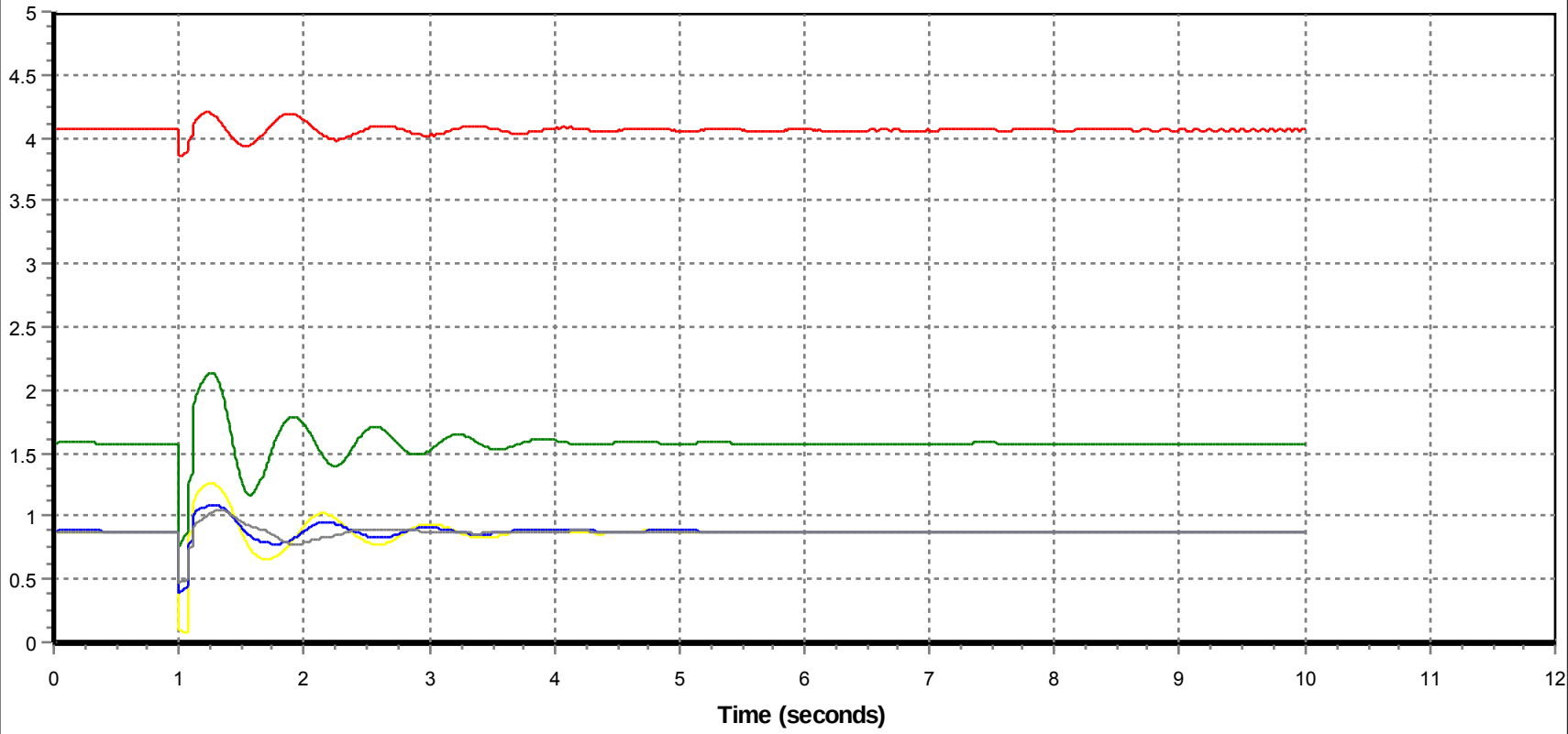

6 - POWR 424[KEEP#2GN 19.000]2 : B14_3pfault_EllsR_trip_9L08

7 - POWR 18274[MACKAY2 18.000]1 : B14_3pfault_EllsR_trip_9L08

8 - POWR 3745[DOVERN 13.800]G1 : B14_3pfault_EllsR_trip_9L08

9 - POWR 19669[MRCP 13.800]1 : B14_3pfault_EllsR_trip_9L08

10 - POWR 10236[MUSKEG4 13.800]1 : B14_3pfault_EllsR_trip_9L08

Frequence Deviation

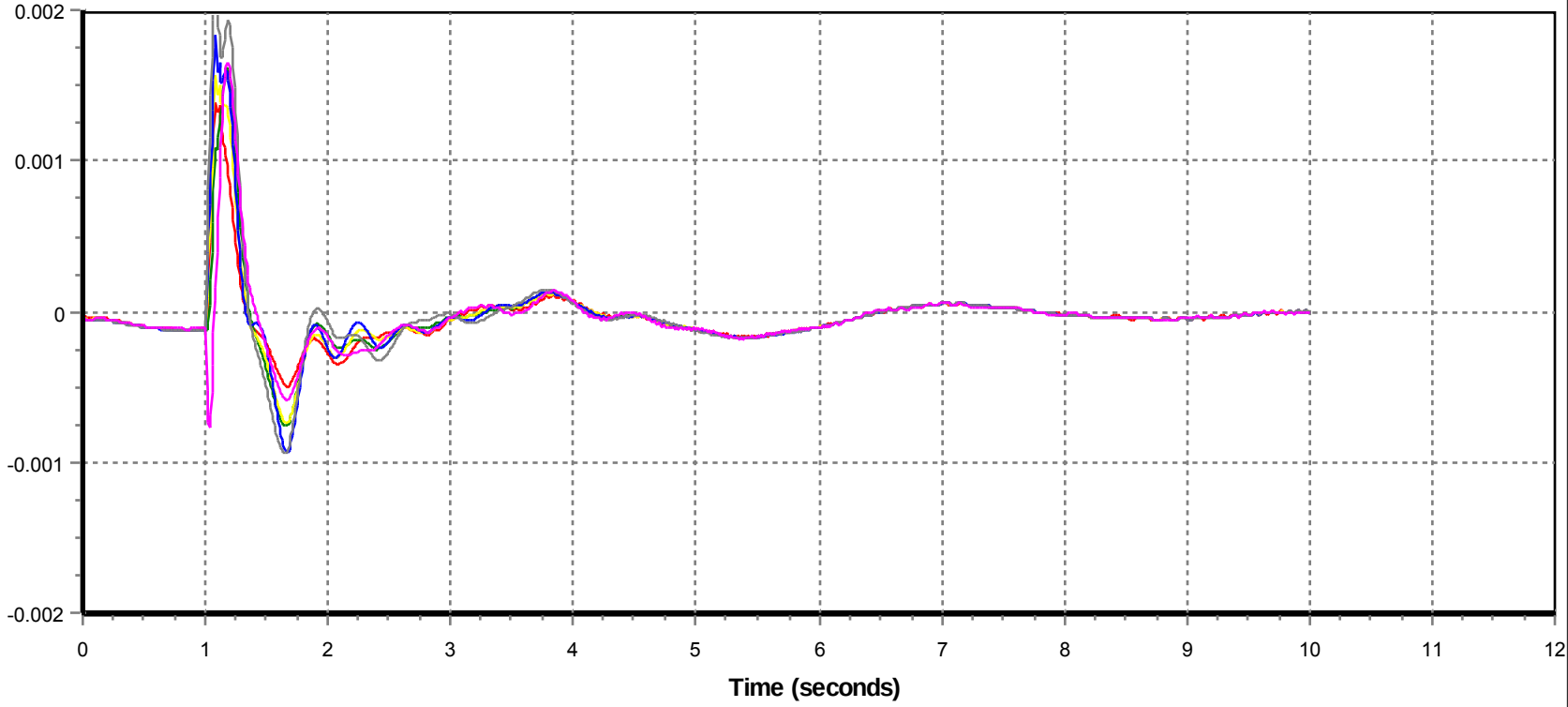

11 - FREQ 1601 [THICKWD1 500.00] : B14_3pfault_EllsR_trip_9L08

12 - FREQ 1670 [BIRCHWOOD 240.00] : B14_3pfault_EllsR_trip_9L08

13 - FREQ 666 [DOVER 240.00] : B14_3pfault_EllsR_trip_9L08

14 - FREQ 1263 [JOSLYN4 240.00] : B14_3pfault_EllsR_trip_9L08

15 - FREQ 98503 [ELLSR 240.00] : B14_3pfault_EllsR_trip_9L08

16 - FREQ 1288 [LIVOCK01 240.00] : B14_3pfault_EllsR_trip_9L08

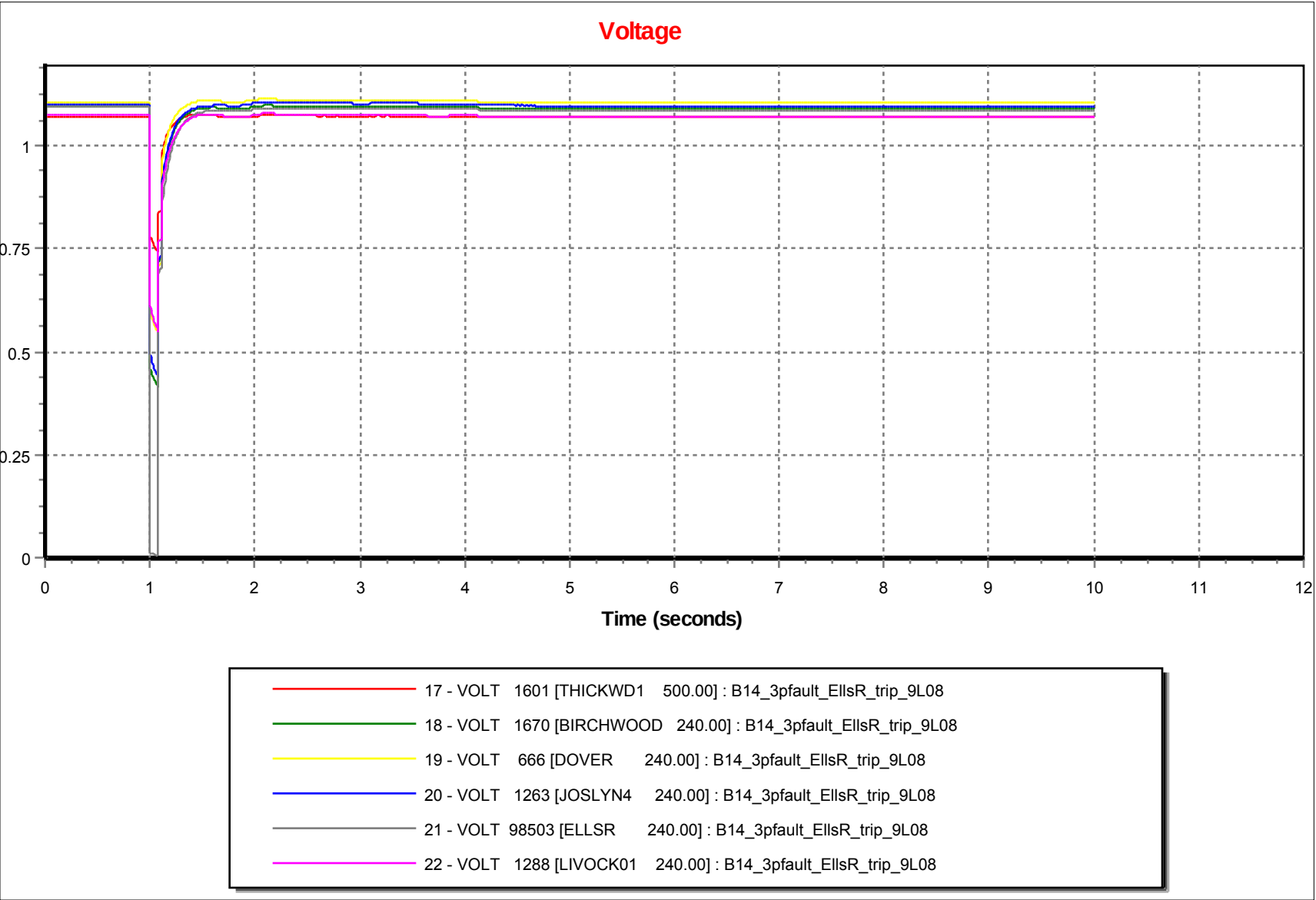
Voltage
1
0.75
0.5
0.25
0
0
1
2
3
4
5
6
7
8
9
10
11
12
Time (seconds)
17 - VOLT 1601 [THICKWD1 500.00] : B14_3pfault_EllsR_trip_9L08
18 - VOLT 1670 [BIRCHWOOD 240.00] : B14_3pfault_EllsR_trip_9L08
19 - VOLT 666 [DOVER 240.00] : B14_3pfault_EllsR_trip_9L08
20 - VOLT 1263 [JOSLYN4 240.00] : B14_3pfault_EllsR_trip_9L08
21 - VOLT 98503 [ELLSR 240.00] : B14_3pfault_EllsR_trip_9L08
22 - VOLT 1288 [LIVOCK01 240.00] : B14_3pfault_EllsR_trip_9L08

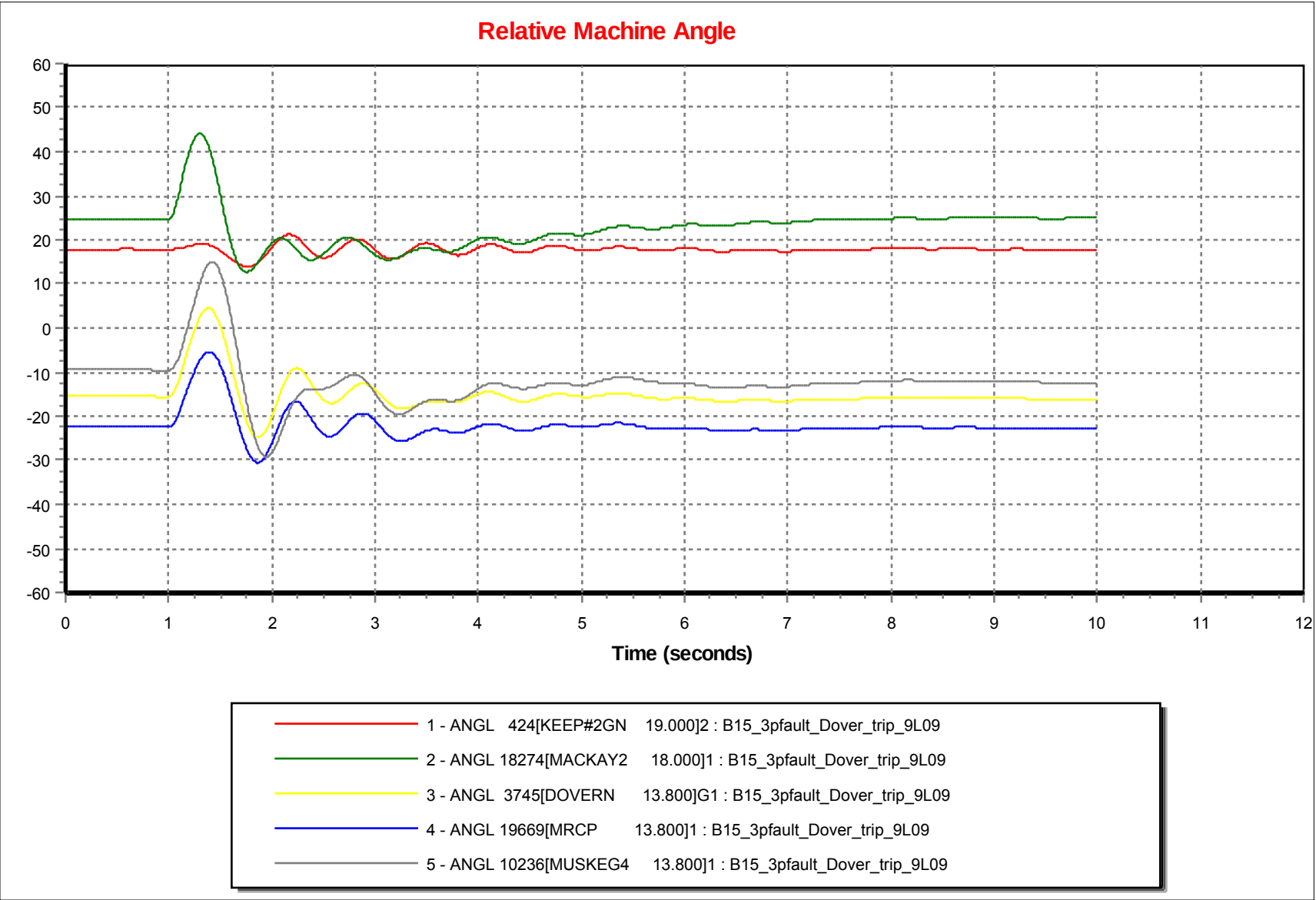
Relative Machine Angle
60
50
40
30
20
10
0
-10
-20
-30
-40
-50
-60
0
1
2
3
4
5
6
7
8
9
10
11
12
Time (seconds)
1 - ANGL 424[KEEP#2GN 19.000]2 : B15_3pfault_Dover_trip_9L09
2 - ANGL 18274[MACKAY2 18.000]1 : B15_3pfault_Dover_trip_9L09
3 - ANGL 3745[DOVERN 13.800]G1 : B15_3pfault_Dover_trip_9L09
4 - ANGL 19669[MRCP 13.800]1 : B15_3pfault_Dover_trip_9L09
5 - ANGL 10236[MUSKEG4 13.800]1 : B15_3pfault_Dover_trip_9L09

Machine Power

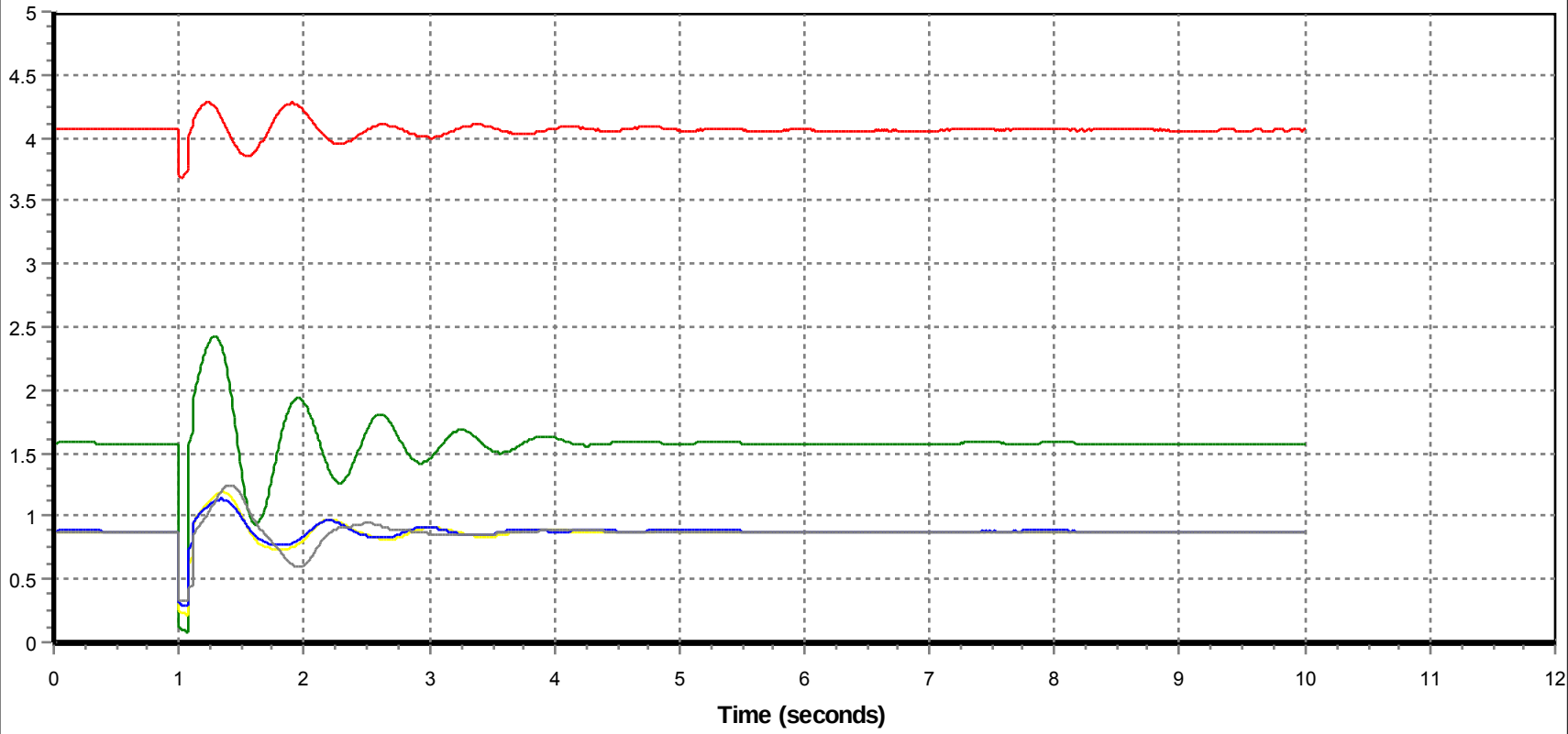

6 - POWR 424[KEEP#2GN 19.000]2 : B15_3pfault_Dover_trip_9L09

7 - POWR 18274[MACKAY2 18.000]1 : B15_3pfault_Dover_trip_9L09

8 - POWR 3745[DOVERN 13.800]G1 : B15_3pfault_Dover_trip_9L09

9 - POWR 19669[MRCP 13.800]1 : B15_3pfault_Dover_trip_9L09

10 - POWR 10236[MUSKEG4 13.800]1 : B15_3pfault_Dover_trip_9L09

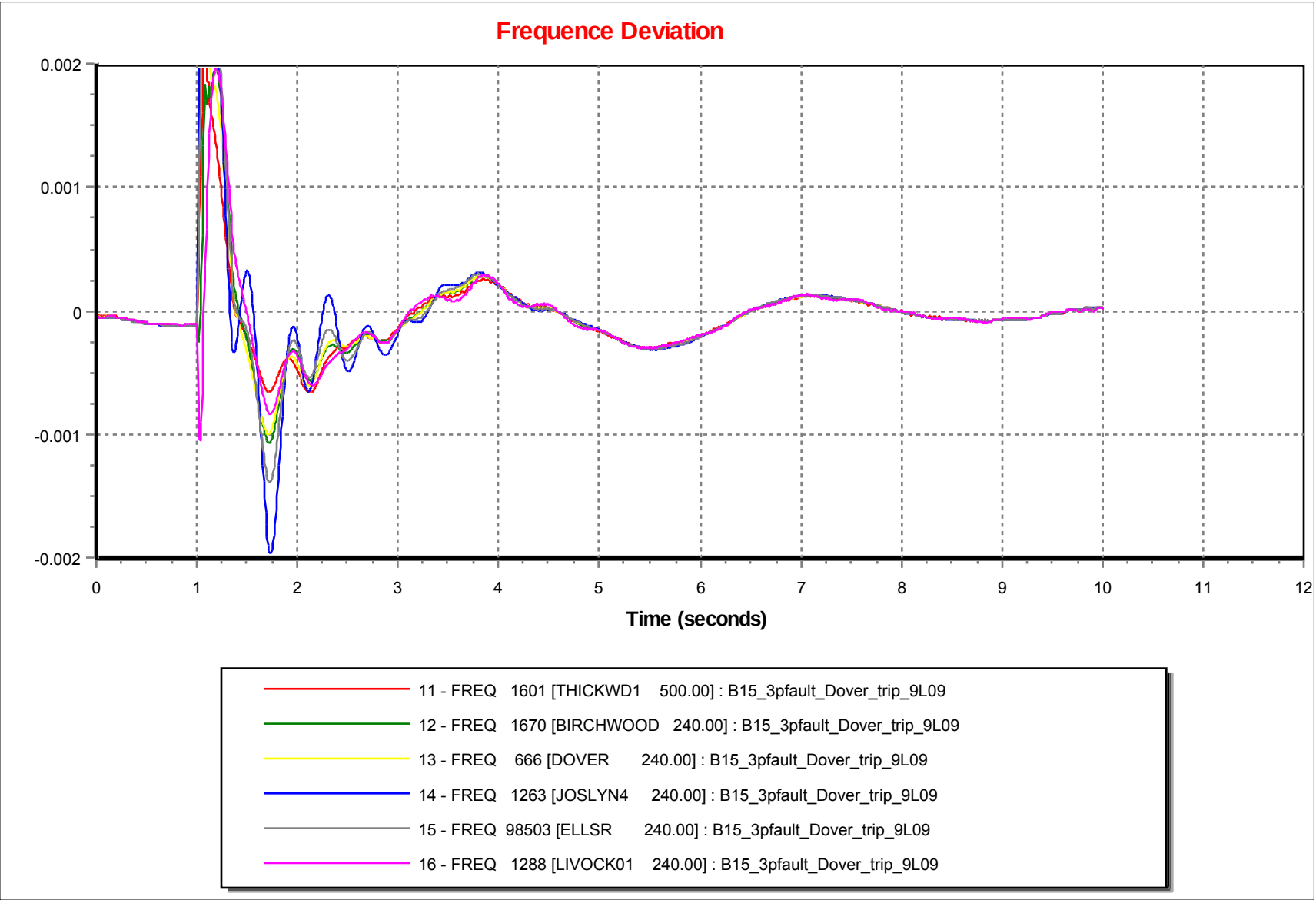
Frequence Deviation
0.002
0.001
0
-0.001
-0.002
0
1
2
3
4
5
6
7
8
9
10
11
12
Time (seconds)
11 - FREQ 1601 [THICKWD1 500.00] : B15_3pfault_Dover_trip_9L09
12 - FREQ 1670 [BIRCHWOOD 240.00] : B15_3pfault_Dover_trip_9L09
13 - FREQ 666 [DOVER 240.00] : B15_3pfault_Dover_trip_9L09
14 - FREQ 1263 [JOSLYN4 240.00] : B15_3pfault_Dover_trip_9L09
15 - FREQ 98503 [ELLSR 240.00] : B15_3pfault_Dover_trip_9L09
16 - FREQ 1288 [LIVOCK01 240.00] : B15_3pfault_Dover_trip_9L09

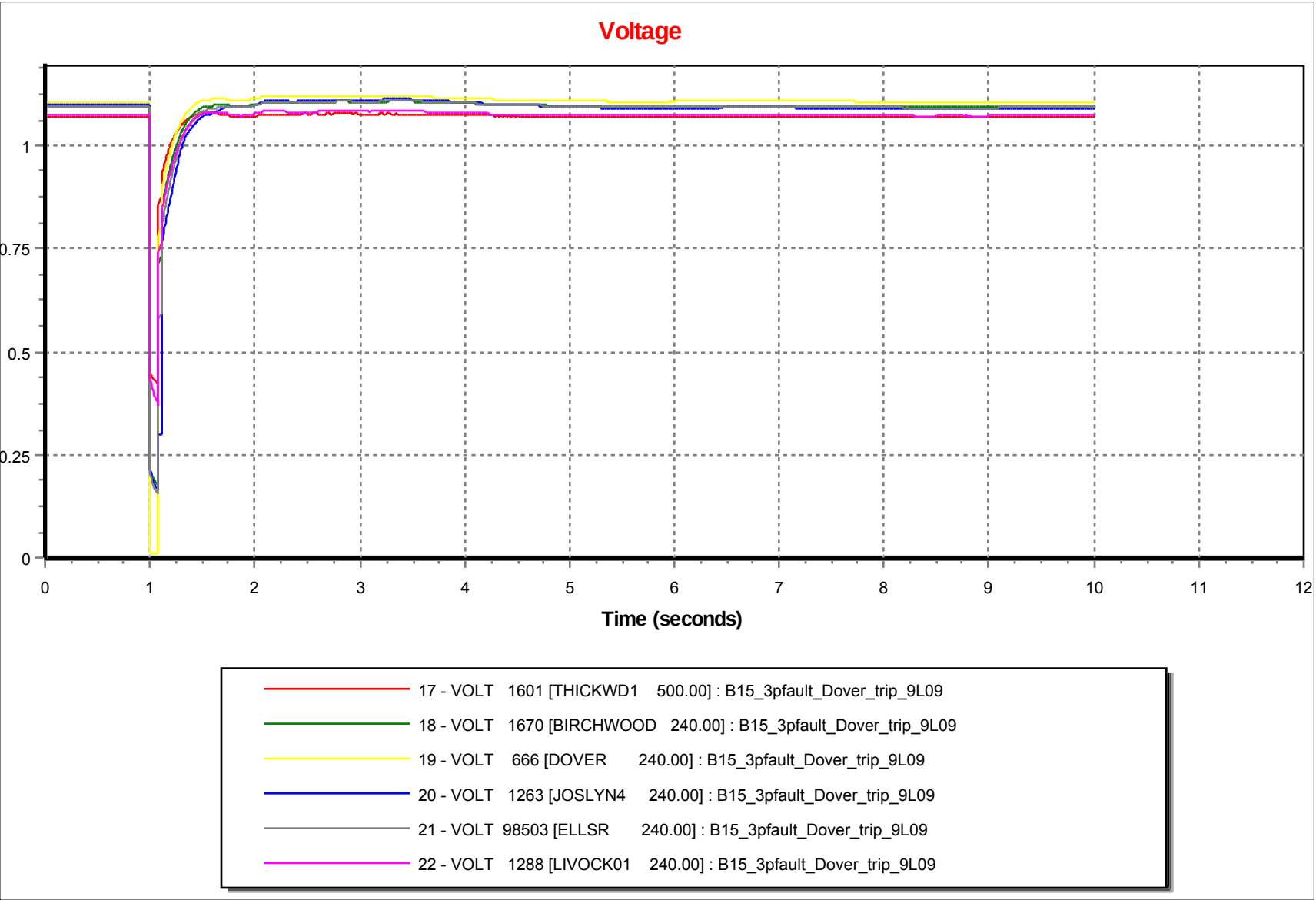
Voltage
1
0.75
0.5
0.25
0
0
1
2
3
4
5
6
7
8
9
10
11
12
Time (seconds)
17 - VOLT 1601 [THICKWD1 500.00] : B15_3pfault_Dover_trip_9L09
18 - VOLT 1670 [BIRCHWOOD 240.00] : B15_3pfault_Dover_trip_9L09
19 - VOLT 666 [DOVER 240.00] : B15_3pfault_Dover_trip_9L09
20 - VOLT 1263 [JOSLYN4 240.00] : B15_3pfault_Dover_trip_9L09
21 - VOLT 98503 [ELLSR 240.00] : B15_3pfault_Dover_trip_9L09
22 - VOLT 1288 [LIVOCK01 240.00] : B15_3pfault_Dover_trip_9L09

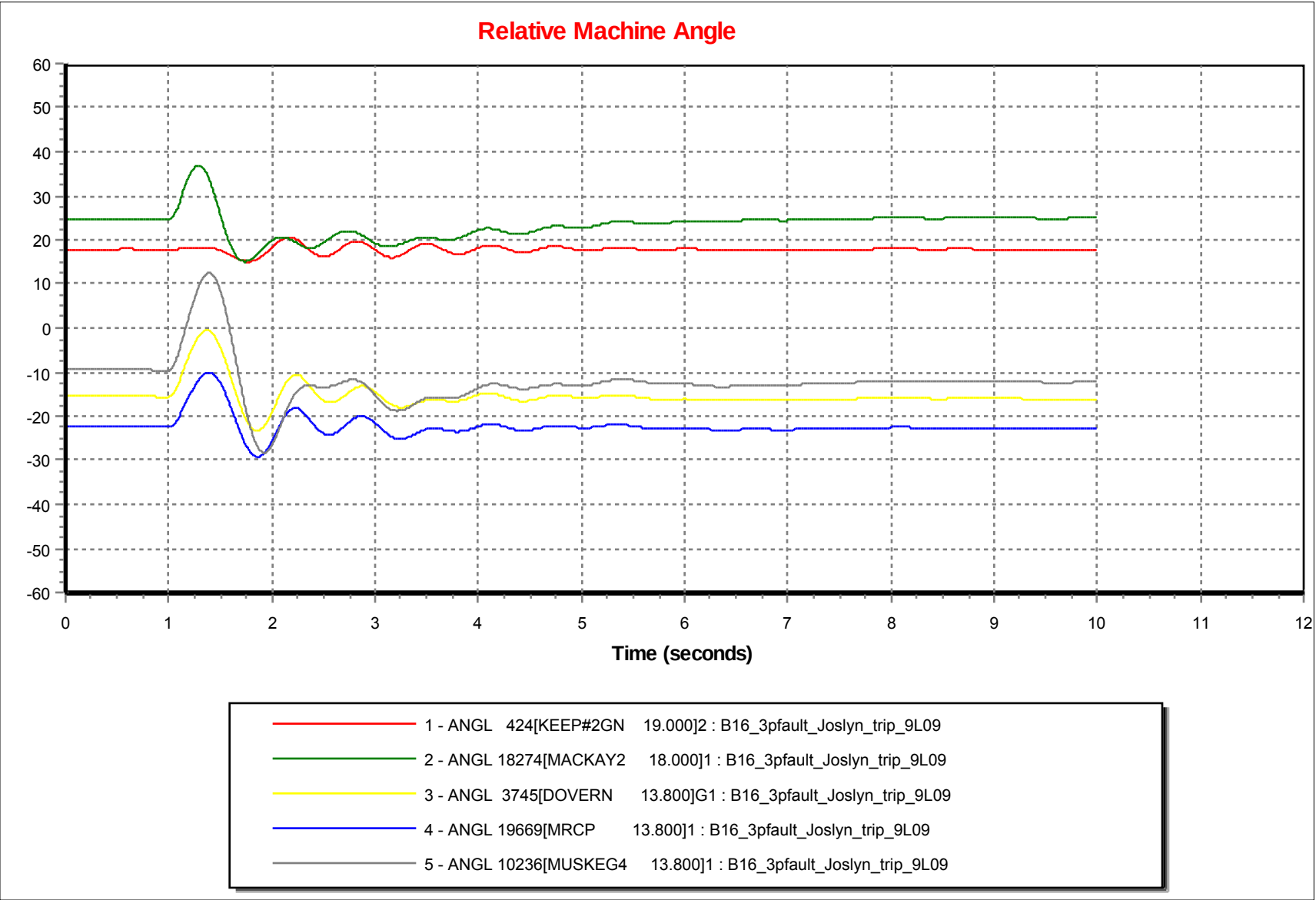
Relative Machine Angle
60
50
40
30
20
10
0
-10
-20
-30
-40
-50
-60
0
1
2
3
4
5
6
7
8
9
10
11
12
Time (seconds)
1 - ANGL 424[KEEP#2GN 19.000]2 : B16_3pfault_Joslyn_trip_9L09
2 - ANGL 18274[MACKAY2 18.000]1 : B16_3pfault_Joslyn_trip_9L09
3 - ANGL 3745[DOVERN 13.800]G1 : B16_3pfault_Joslyn_trip_9L09
4 - ANGL 19669[MRCP 13.800]1 : B16_3pfault_Joslyn_trip_9L09
5 - ANGL 10236[MUSKEG4 13.800]1 : B16_3pfault_Joslyn_trip_9L09

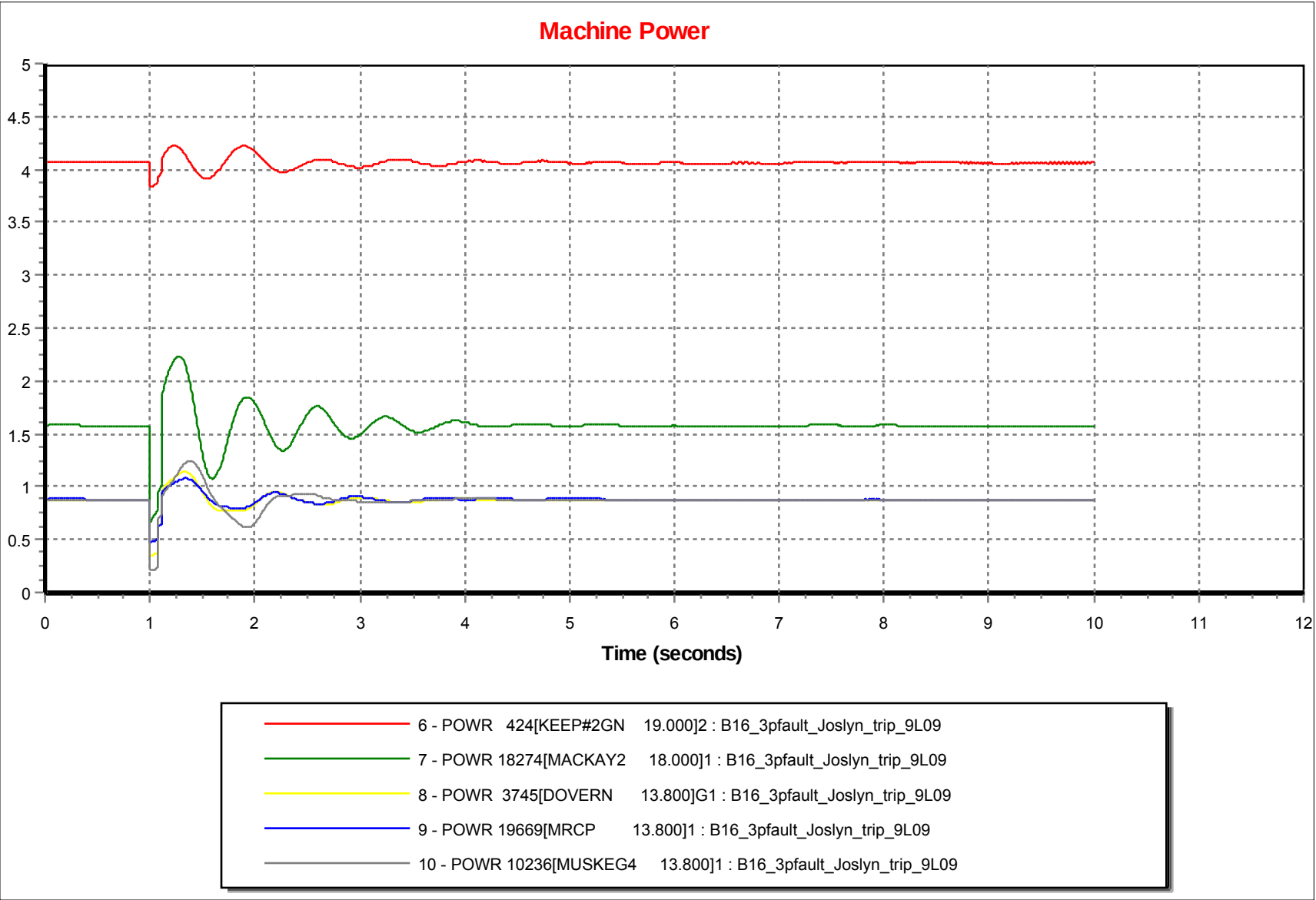
Machine Power
5
4.5
4
3.5
3
2.5
2
1.5
1
0.5
0
0
1
2
3
4
5
6
7
8
9
10
11
12
Time (seconds)
6 - POWR 424[KEEP#2GN 19.000]2 : B16_3pfault_Joslyn_trip_9L09
7 - POWR 18274[MACKAY2 18.000]1 : B16_3pfault_Joslyn_trip_9L09
8 - POWR 3745[DOVERN 13.800]G1 : B16_3pfault_Joslyn_trip_9L09
9 - POWR 19669[MRCP 13.800]1 : B16_3pfault_Joslyn_trip_9L09
10 - POWR 10236[MUSKEG4 13.800]1 : B16_3pfault_Joslyn_trip_9L09

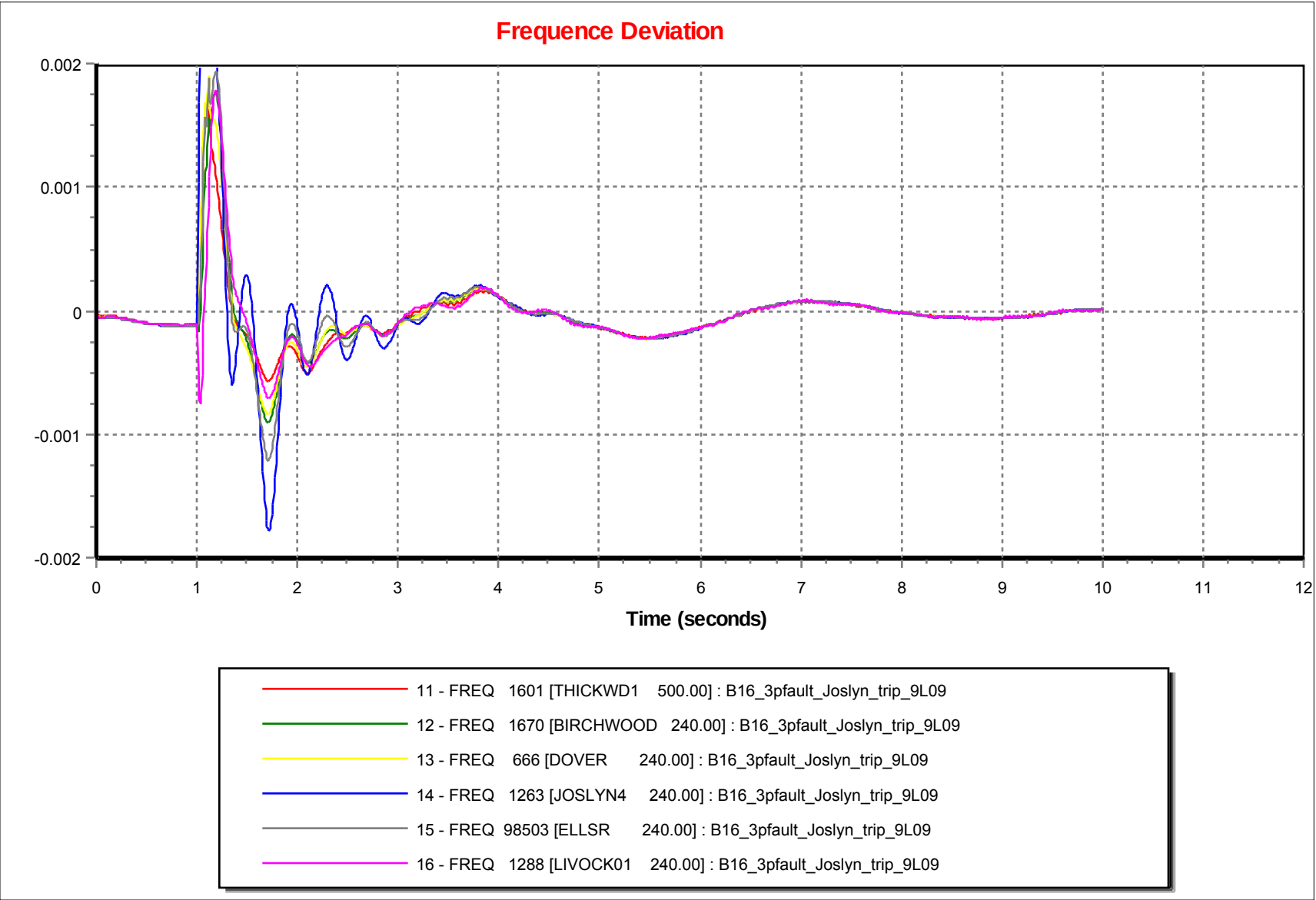
Frequence Deviation
0.002
0.001
0
-0.001
-0.002
0
1
2
3
4
5
6
7
8
9
10
11
12
Time (seconds)
11 - FREQ 1601 [THICKWD1 500.00] : B16_3pfault_Joslyn_trip_9L09
12 - FREQ 1670 [BIRCHWOOD 240.00] : B16_3pfault_Joslyn_trip_9L09
13 - FREQ 666 [DOVER 240.00] : B16_3pfault_Joslyn_trip_9L09
14 - FREQ 1263 [JOSLYN4 240.00] : B16_3pfault_Joslyn_trip_9L09
15 - FREQ 98503 [ELLSR 240.00] : B16_3pfault_Joslyn_trip_9L09
16 - FREQ 1288 [LIVOCK01 240.00] : B16_3pfault_Joslyn_trip_9L09

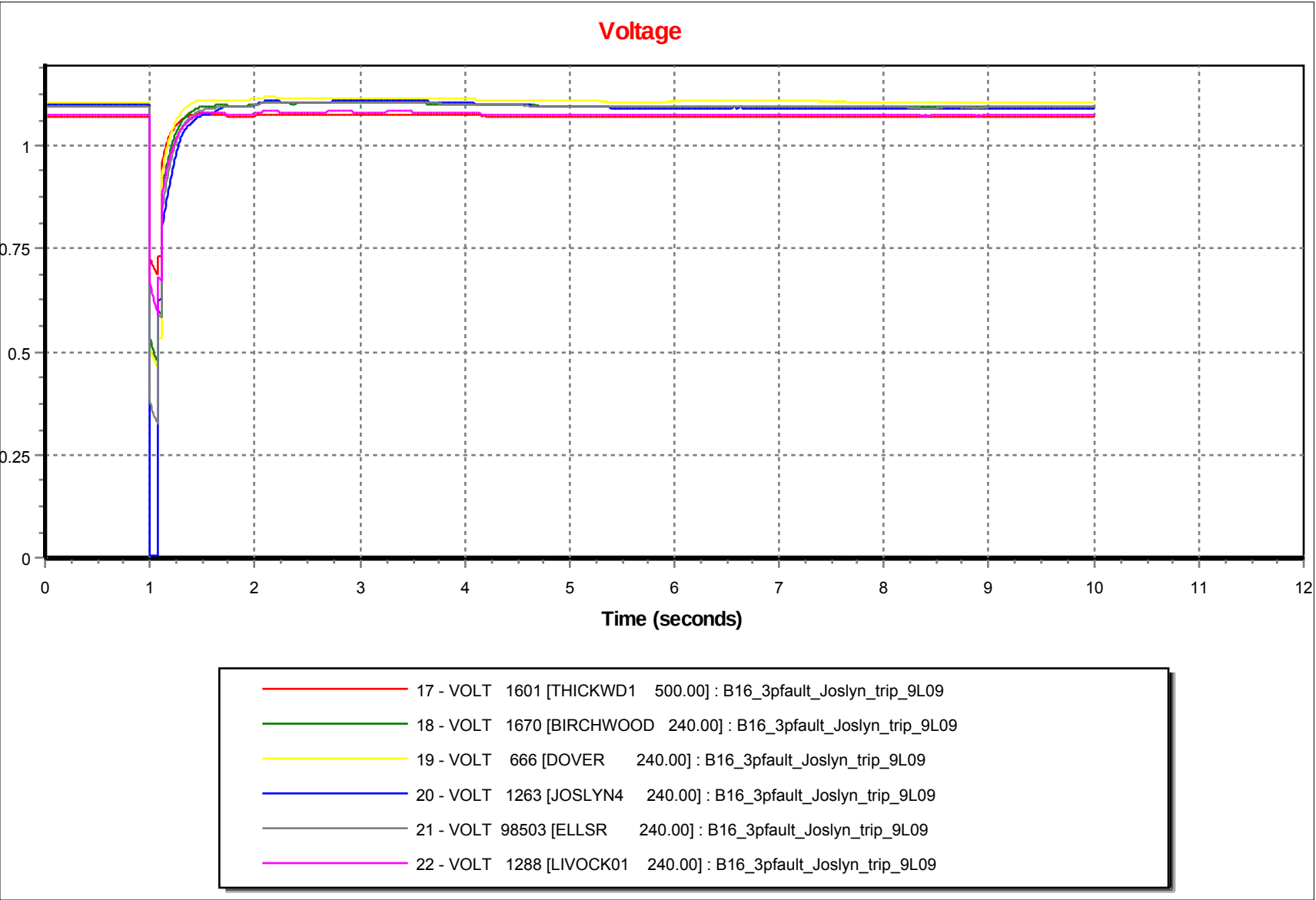
Voltage
1
0.75
0.5
0.25
0
0
1
2
3
4
5
6
7
8
9
10
11
12
Time (seconds)
17 - VOLT 1601 [THICKWD1 500.00] : B16_3pfault_Joslyn_trip_9L09
18 - VOLT 1670 [BIRCHWOOD 240.00] : B16_3pfault_Joslyn_trip_9L09
19 - VOLT 666 [DOVER 240.00] : B16_3pfault_Joslyn_trip_9L09
20 - VOLT 1263 [JOSLYN4 240.00] : B16_3pfault_Joslyn_trip_9L09
21 - VOLT 98503 [ELLSR 240.00] : B16_3pfault_Joslyn_trip_9L09
22 - VOLT 1288 [LIVOCK01 240.00] : B16_3pfault_Joslyn_trip_9L09

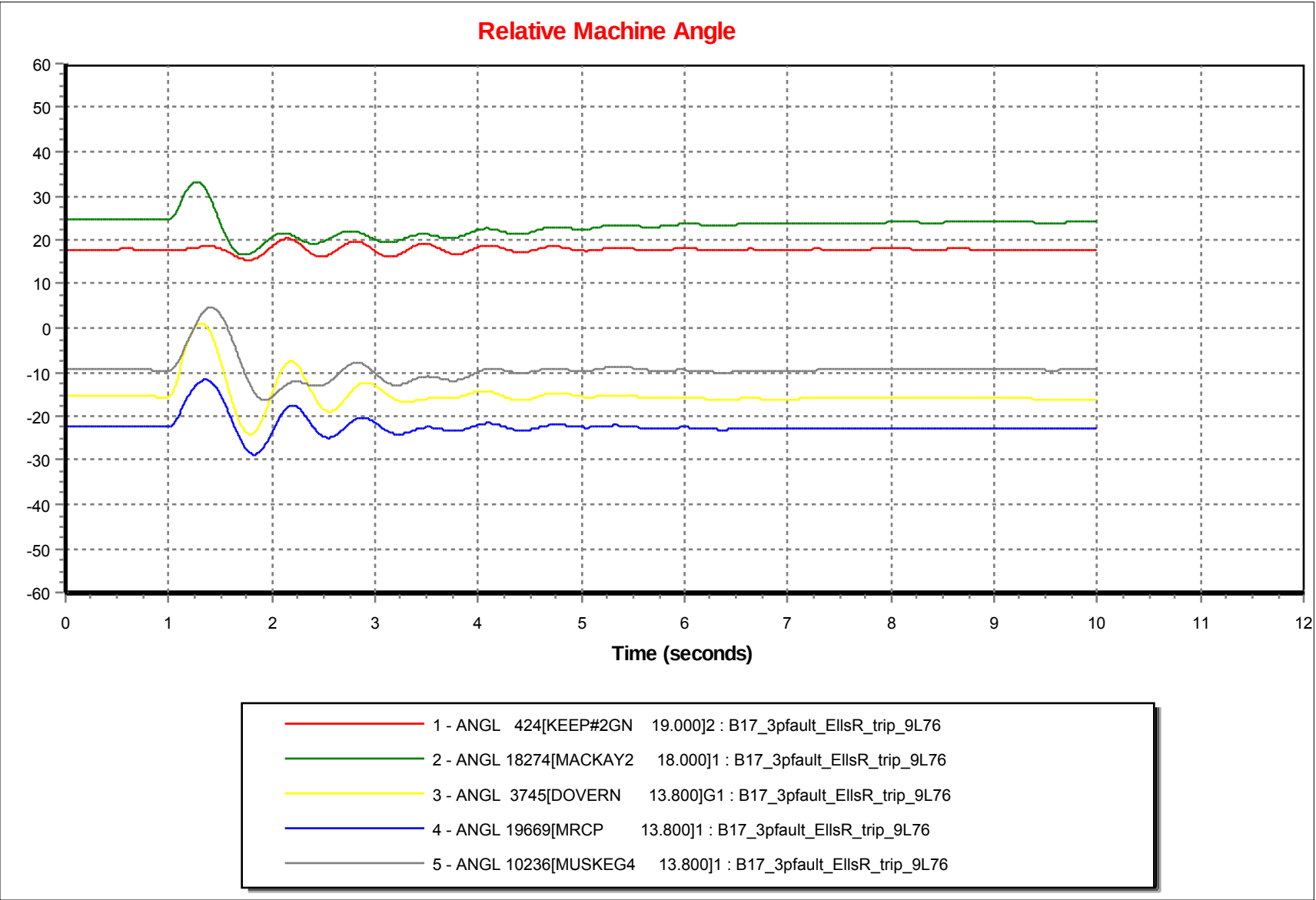
Relative Machine Angle
60
50
40
30
20
10
0
-10
-20
-30
-40
-50
-60
0
1
2
3
4
5
6
7
8
9
10
11
12
Time (seconds)
1 - ANGL 424[KEEP#2GN 19.000]2 : B17_3pfault_EllsR_trip_9L76
2 - ANGL 18274[MACKAY2 18.000]1 : B17_3pfault_EllsR_trip_9L76
3 - ANGL 3745[DOVERN 13.800]G1 : B17_3pfault_EllsR_trip_9L76
4 - ANGL 19669[MRCP 13.800]1 : B17_3pfault_EllsR_trip_9L76
5 - ANGL 10236[MUSKEG4 13.800]1 : B17_3pfault_EllsR_trip_9L76

Machine Power

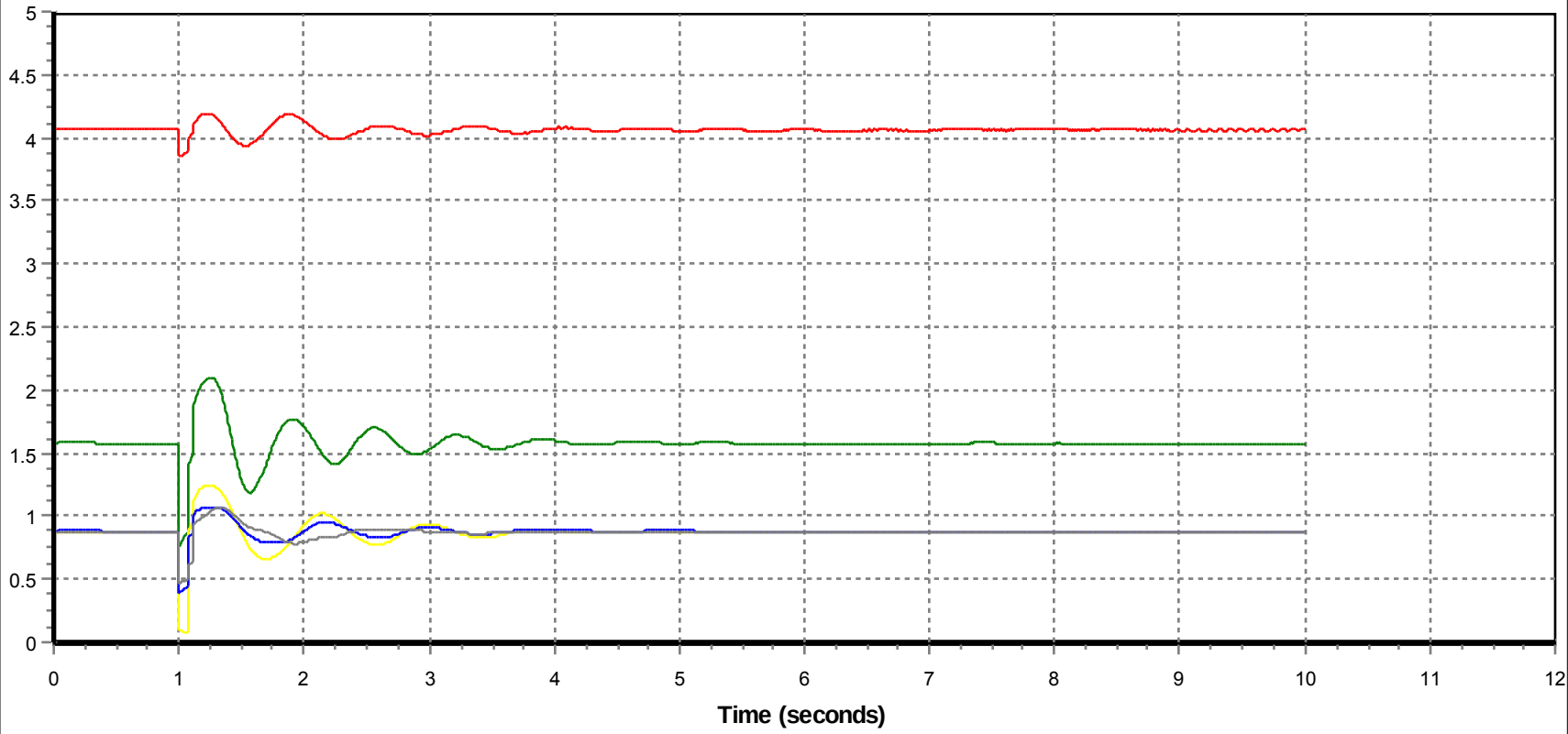

6 - POWR 424[KEEP#2GN 19.000]2 : B17_3pfault_EllsR_trip_9L76

7 - POWR 18274[MACKAY2 18.000]1 : B17_3pfault_EllsR_trip_9L76

8 - POWR 3745[DOVERN 13.800]G1 : B17_3pfault_EllsR_trip_9L76

9 - POWR 19669[MRCP 13.800]1 : B17_3pfault_EllsR_trip_9L76

10 - POWR 10236[MUSKEG4 13.800]1 : B17_3pfault_EllsR_trip_9L76

Frequence Deviation

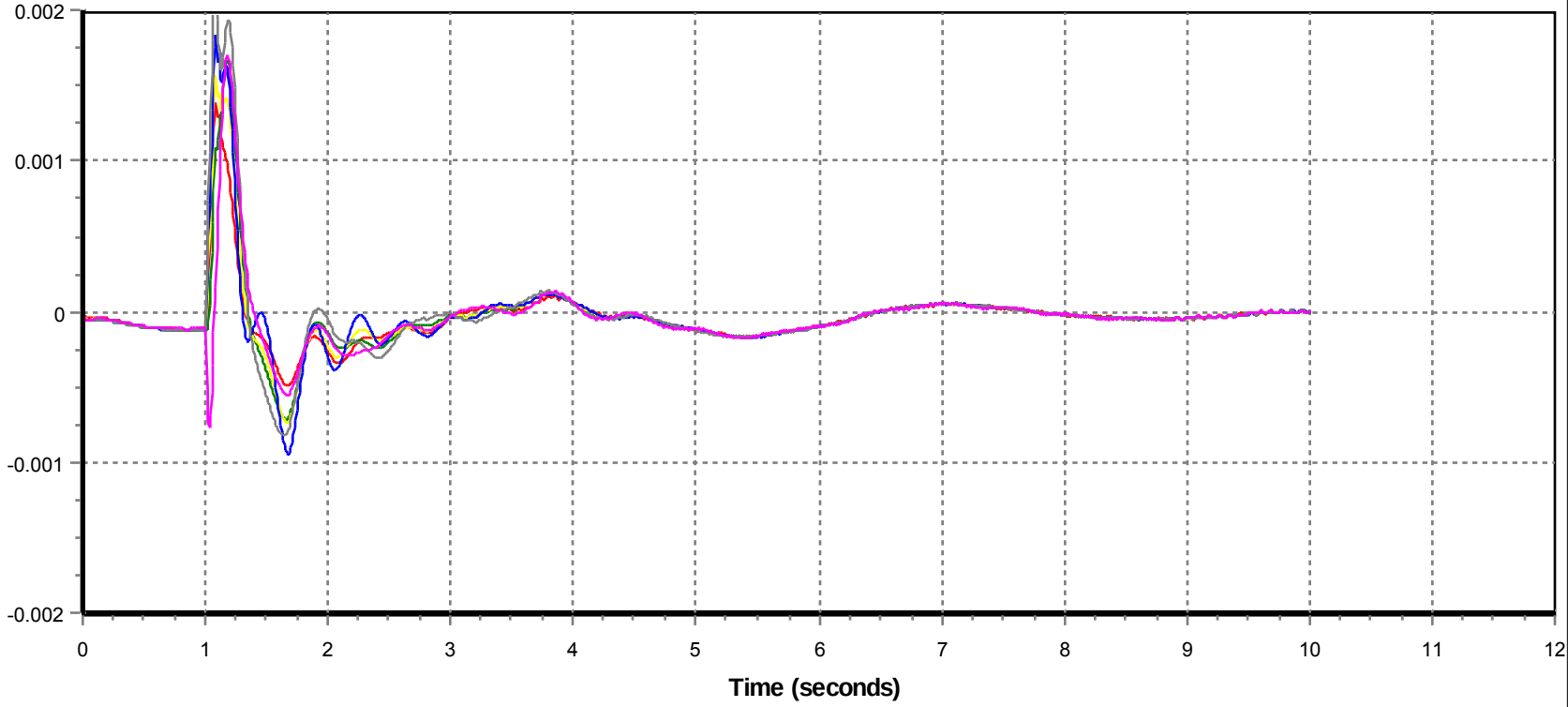

11 - FREQ 1601 [THICKWD1 500.00] : B17_3pfault_EllsR_trip_9L76

12 - FREQ 1670 [BIRCHWOOD 240.00] : B17_3pfault_EllsR_trip_9L76

13 - FREQ 666 [DOVER 240.00] : B17_3pfault_EllsR_trip_9L76

14 - FREQ 1263 [JOSLYN4 240.00] : B17_3pfault_EllsR_trip_9L76

15 - FREQ 98503 [ELLSR 240.00] : B17_3pfault_EllsR_trip_9L76

16 - FREQ 1288 [LIVOCK01 240.00] : B17_3pfault_EllsR_trip_9L76

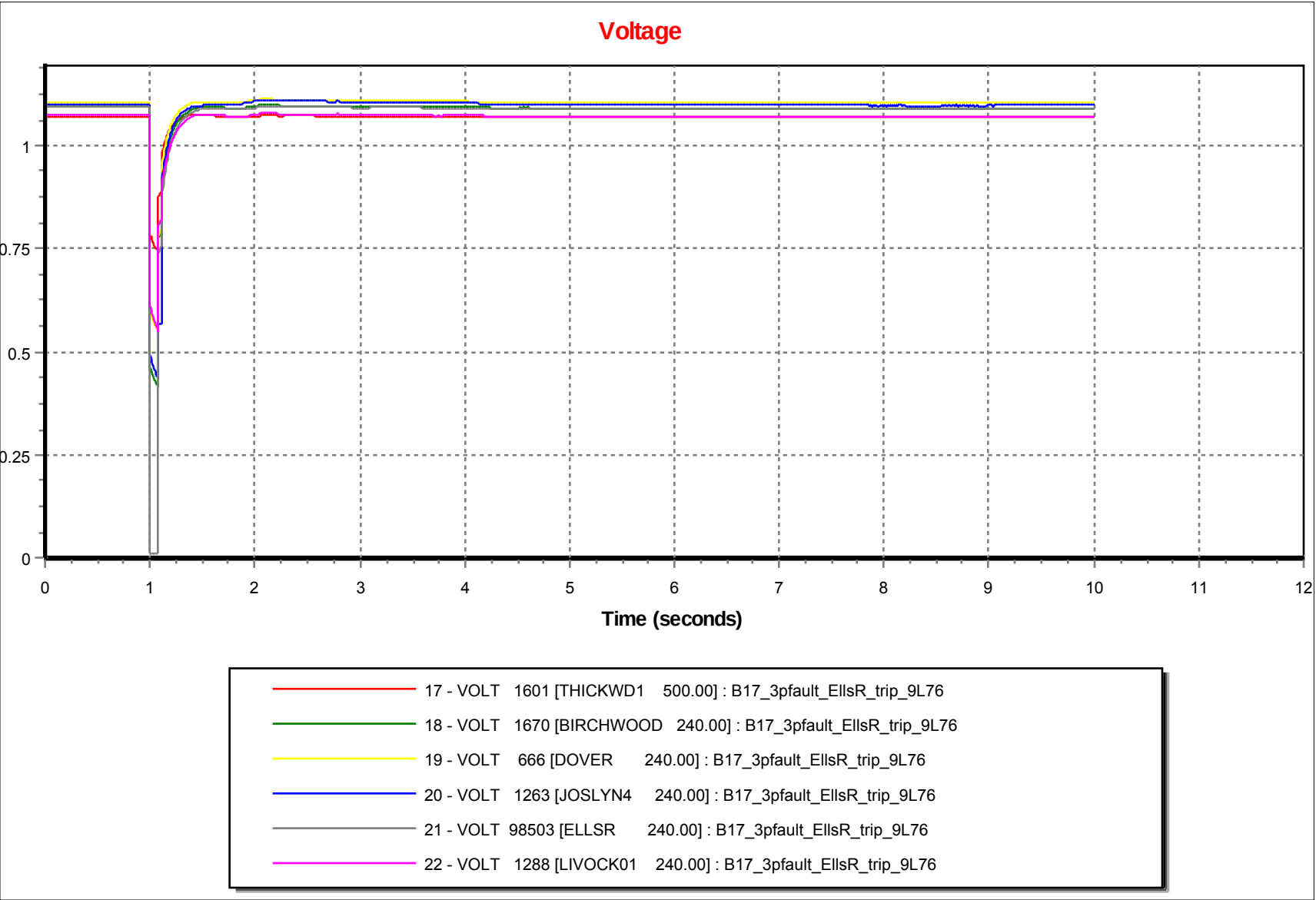
Voltage
1
0.75
0.5
0.25
0
0
1
2
3
4
5
6
7
8
9
10
11
12
Time (seconds)
17 - VOLT 1601 [THICKWD1 500.00] : B17_3pfault_EllsR_trip_9L76
18 - VOLT 1670 [BIRCHWOOD 240.00] : B17_3pfault_EllsR_trip_9L76
19 - VOLT 666 [DOVER 240.00] : B17_3pfault_EllsR_trip_9L76
20 - VOLT 1263 [JOSLYN4 240.00] : B17_3pfault_EllsR_trip_9L76
21 - VOLT 98503 [ELLSR 240.00] : B17_3pfault_EllsR_trip_9L76
22 - VOLT 1288 [LIVOCK01 240.00] : B17_3pfault_EllsR_trip_9L76

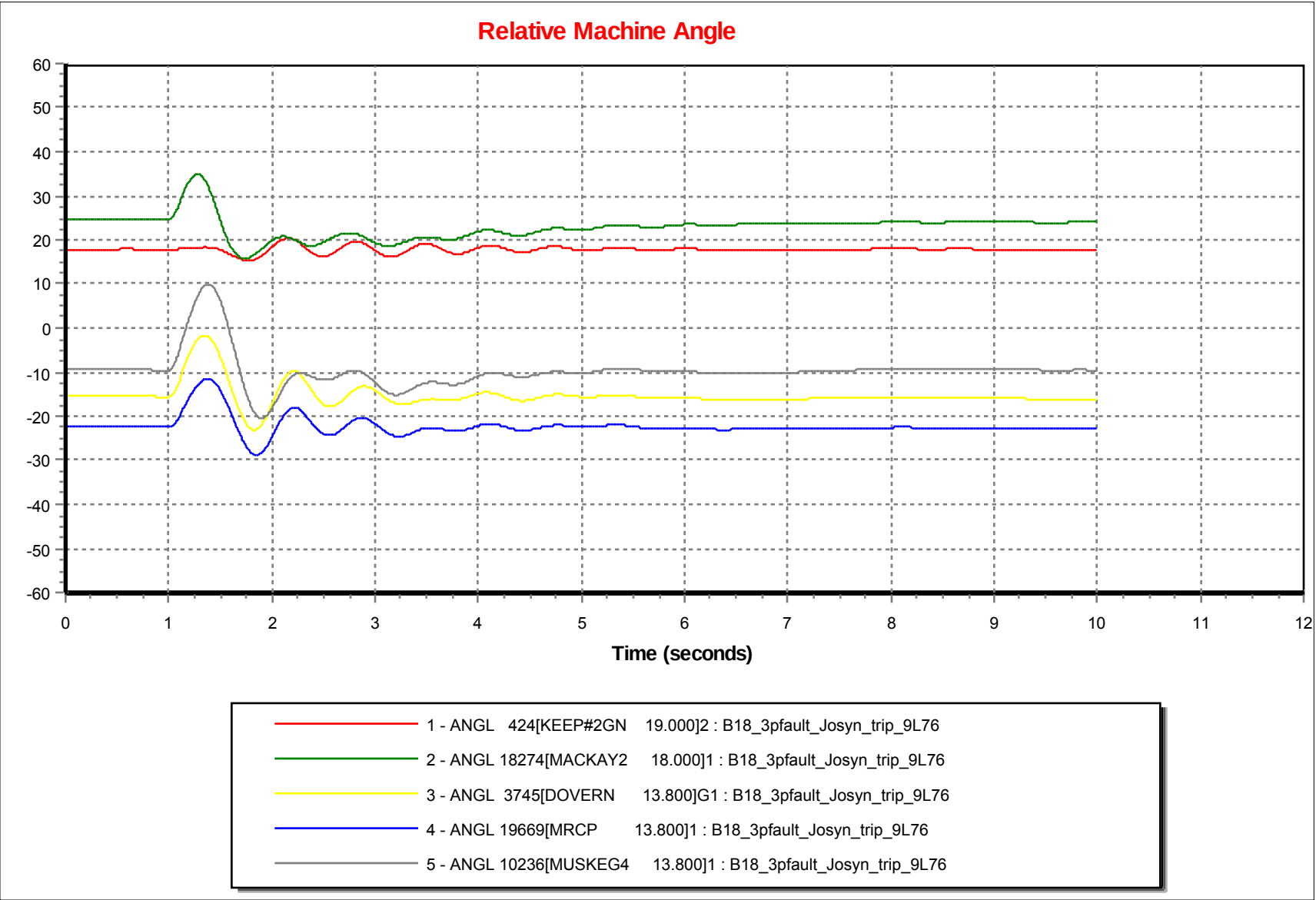
Relative Machine Angle
60
50
40
30
20
10
0
-10
-20
-30
-40
-50
-60
0
1
2
3
4
5
6
7
8
9
10
11
12
Time (seconds)
1 - ANGL 424[KEEP#2GN 19.000]2 : B18_3pfault_Josyn_trip_9L76
2 - ANGL 18274[MACKAY2 18.000]1 : B18_3pfault_Josyn_trip_9L76
3 - ANGL 3745[DOVERN 13.800]G1 : B18_3pfault_Josyn_trip_9L76
4 - ANGL 19669[MRCP 13.800]1 : B18_3pfault_Josyn_trip_9L76
5 - ANGL 10236[MUSKEG4 13.800]1 : B18_3pfault_Josyn_trip_9L76

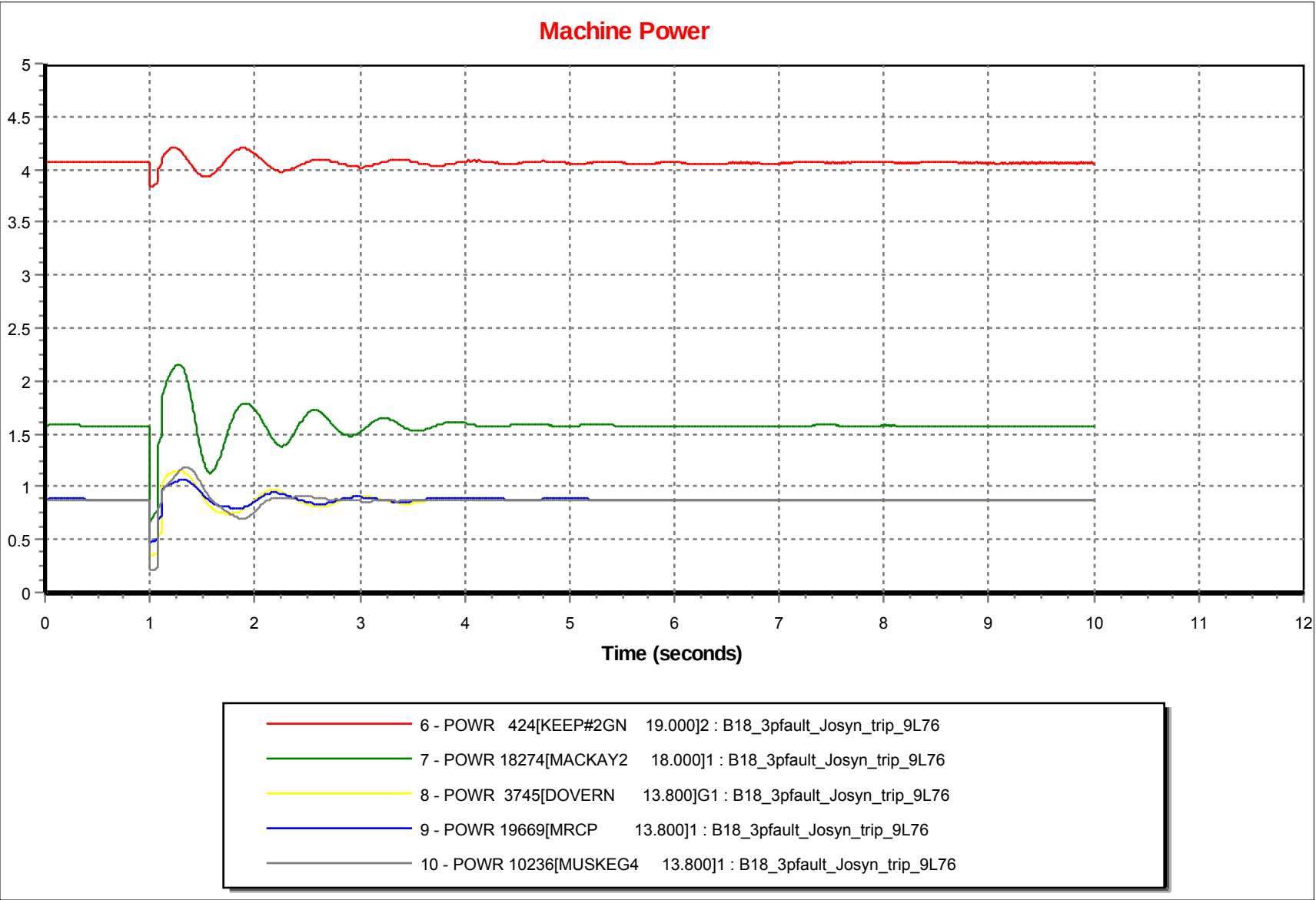
Machine Power
5
4.5
4
3.5
3
2.5
2
1.5
1
0.5
0
0
1
2
3
4
5
6
7
8
9
10
11
12
Time (seconds)
6 - POWR 424[KEEP#2GN 19.000]2 : B18_3pfault_Josyn_trip_9L76
7 - POWR 18274[MACKAY2 18.000]1 : B18_3pfault_Josyn_trip_9L76
8 - POWR 3745[DOVERN 13.800]G1 : B18_3pfault_Josyn_trip_9L76
9 - POWR 19669[MRCP 13.800]1 : B18_3pfault_Josyn_trip_9L76
10 - POWR 10236[MUSKEG4 13.800]1 : B18_3pfault_Josyn_trip_9L76

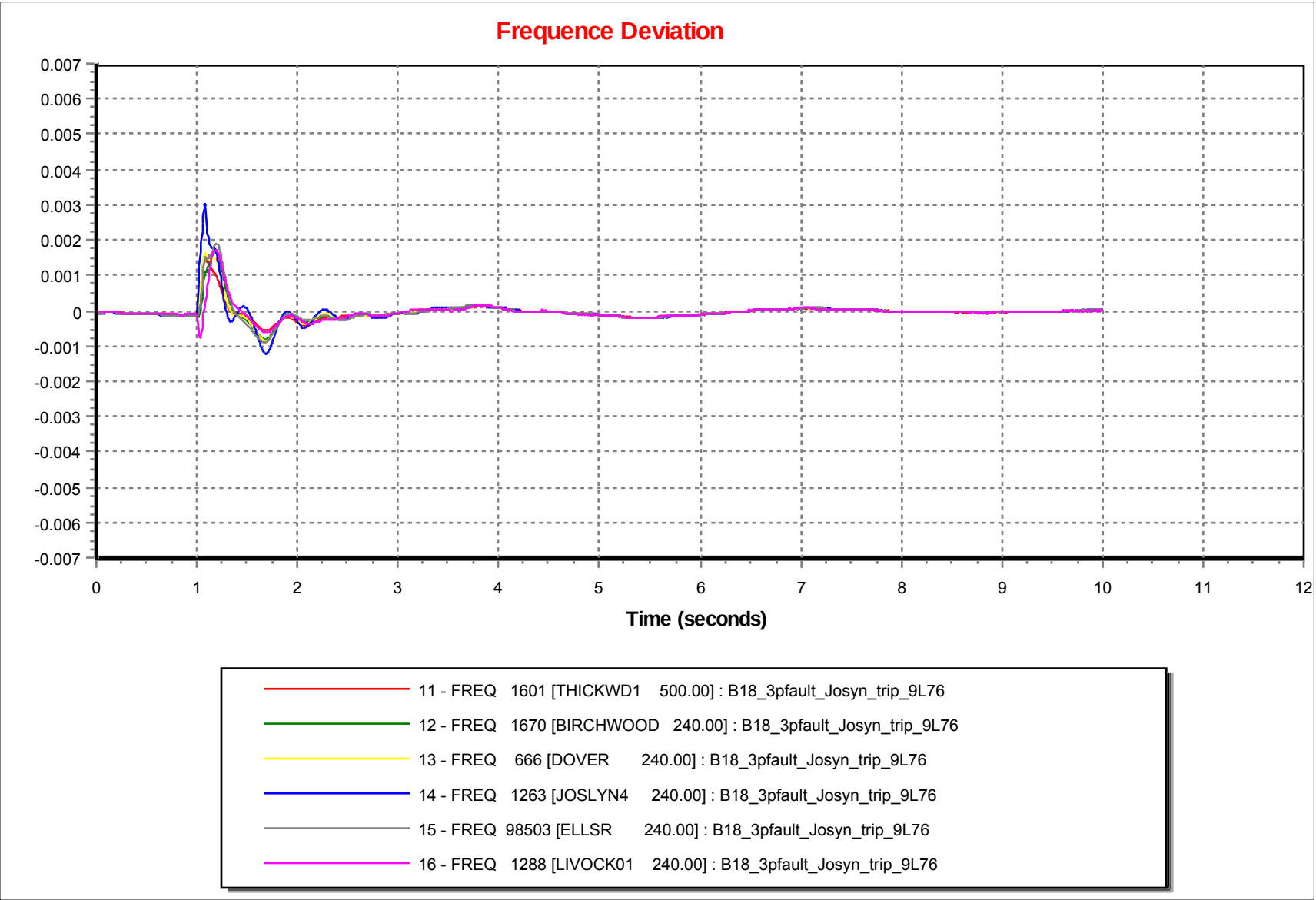
Frequence Deviation
0.007
0.006
0.005
0.004
0.003
0.002
0.001
0
-0.001
-0.002
-0.003
-0.004
-0.005
-0.006
-0.007
0
1
2
3
4
5
6
7
8
9
10
11
12
Time (seconds)
11 - FREQ 1601 [THICKWD1 500.00] : B18_3pfault_Josyn_trip_9L76
12 - FREQ 1670 [BIRCHWOOD 240.00] : B18_3pfault_Josyn_trip_9L76
13 - FREQ 666 [DOVER 240.00] : B18_3pfault_Josyn_trip_9L76
14 - FREQ 1263 [JOSLYN4 240.00] : B18_3pfault_Josyn_trip_9L76
15 - FREQ 98503 [ELLSR 240.00] : B18_3pfault_Josyn_trip_9L76
16 - FREQ 1288 [LIVOCK01 240.00] : B18_3pfault_Josyn_trip_9L76

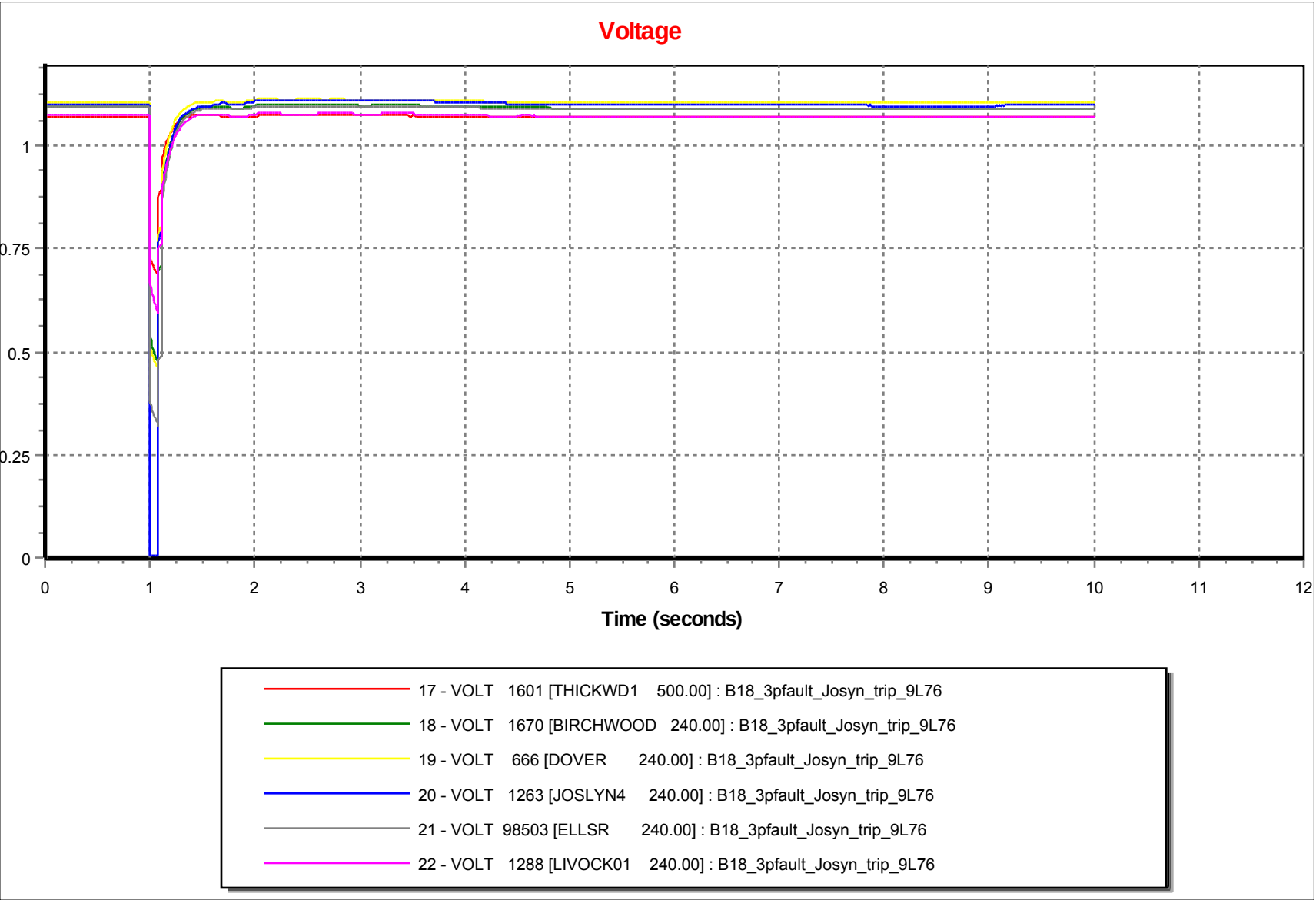
Voltage
1
0.75
0.5
0.25
0
0
1
2
3
4
5
6
7
8
9
10
11
12
Time (seconds)
17 - VOLT 1601 [THICKWD1 500.00] : B18_3pfault_Josyn_trip_9L76
18 - VOLT 1670 [BIRCHWOOD 240.00] : B18_3pfault_Josyn_trip_9L76
19 - VOLT 666 [DOVER 240.00] : B18_3pfault_Josyn_trip_9L76
20 - VOLT 1263 [JOSLYN4 240.00] : B18_3pfault_Josyn_trip_9L76
21 - VOLT 98503 [ELLSR 240.00] : B18_3pfault_Josyn_trip_9L76
22 - VOLT 1288 [LIVOCK01 240.00] : B18_3pfault_Josyn_trip_9L76

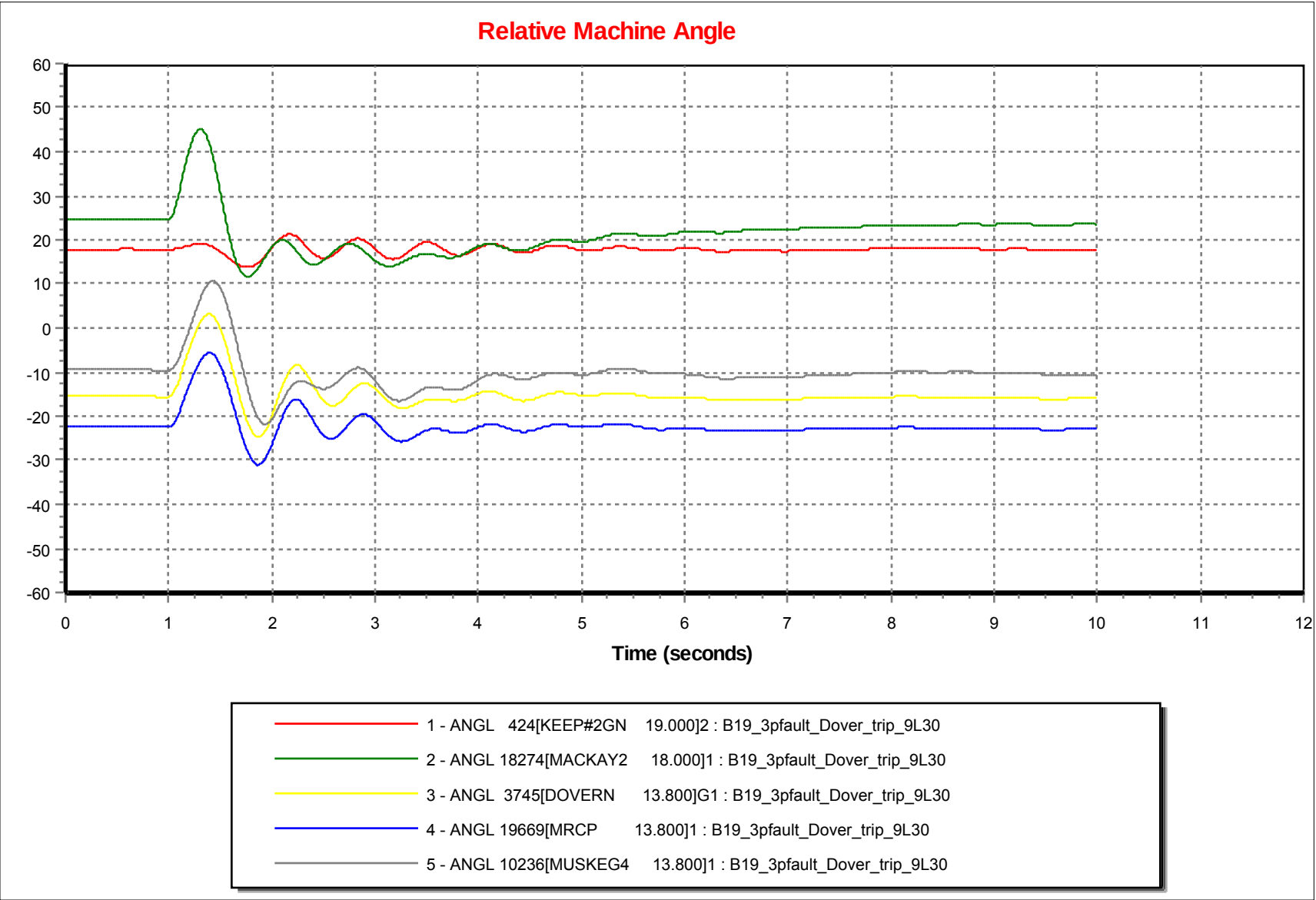
Relative Machine Angle
60
50
40
30
20
10
0
-10
-20
-30
-40
-50
-60
0
1
2
3
4
5
6
7
8
9
10
11
12
Time (seconds)
1 - ANGL 424[KEEP#2GN 19.000]2 : B19_3pfault_Dover_trip_9L30
2 - ANGL 18274[MACKAY2 18.000]1 : B19_3pfault_Dover_trip_9L30
3 - ANGL 3745[DOVERN 13.800]G1 : B19_3pfault_Dover_trip_9L30
4 - ANGL 19669[MRCP 13.800]1 : B19_3pfault_Dover_trip_9L30
5 - ANGL 10236[MUSKEG4 13.800]1 : B19_3pfault_Dover_trip_9L30

Machine Power

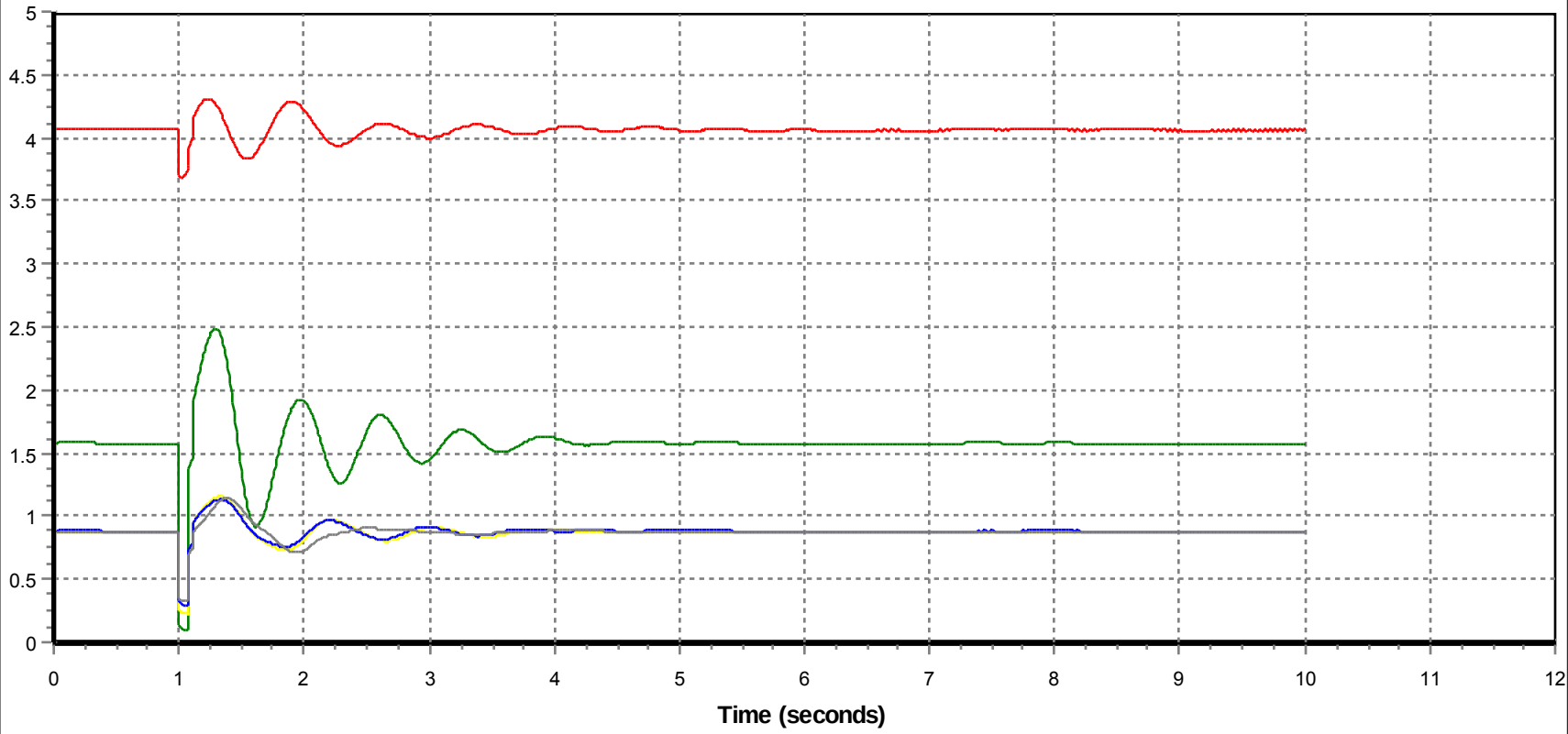

6 - POWR 424[KEEP#2GN 19.000]2 : B19_3pfault_Dover_trip_9L30

7 - POWR 18274[MACKAY2 18.000]1 : B19_3pfault_Dover_trip_9L30

8 - POWR 3745[DOVERN 13.800]G1 : B19_3pfault_Dover_trip_9L30

9 - POWR 19669[MRCP 13.800]1 : B19_3pfault_Dover_trip_9L30

10 - POWR 10236[MUSKEG4 13.800]1 : B19_3pfault_Dover_trip_9L30

Frequence Deviation

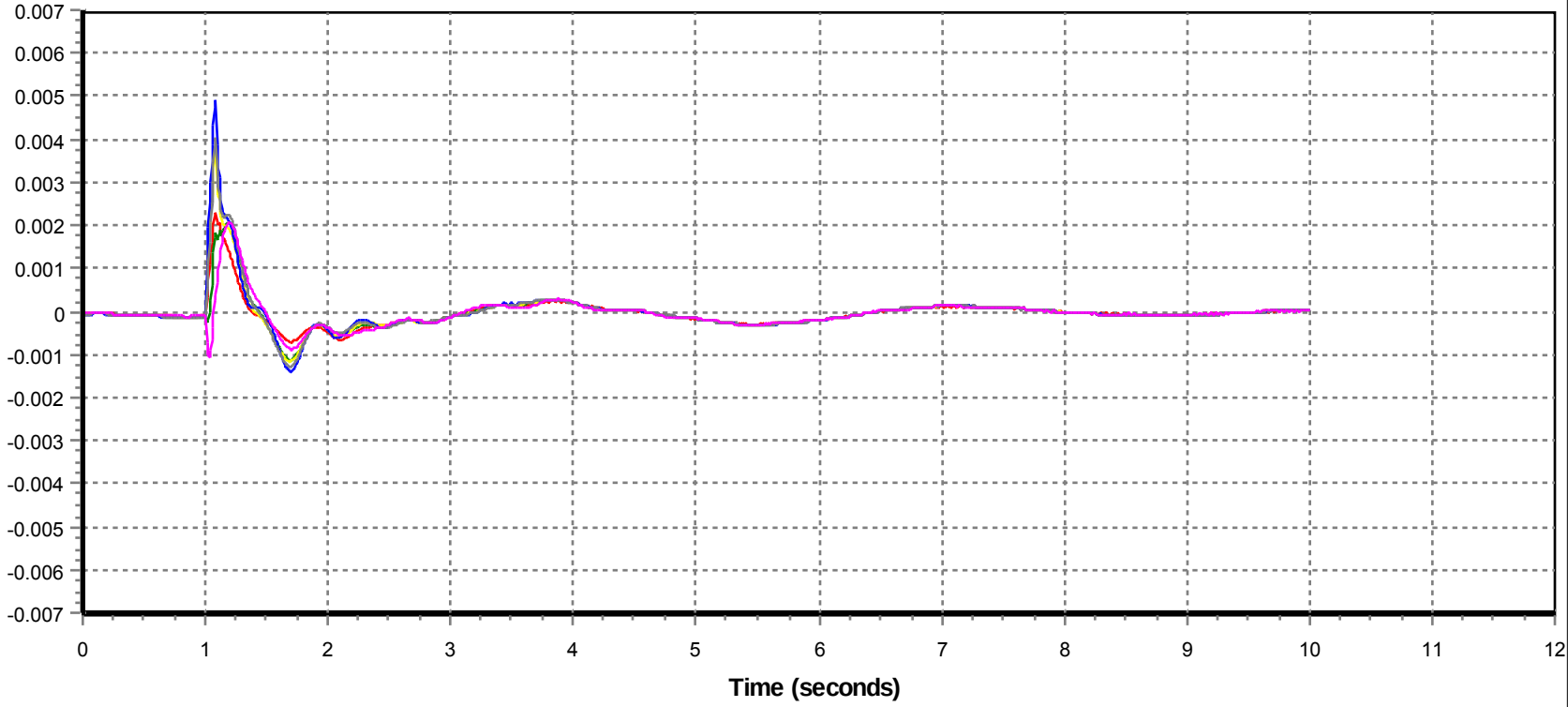

11 - FREQ 1601 [THICKWD1 500.00] : B19_3pfault_Dover_trip_9L30

12 - FREQ 1670 [BIRCHWOOD 240.00] : B19_3pfault_Dover_trip_9L30

13 - FREQ 666 [DOVER 240.00] : B19_3pfault_Dover_trip_9L30

14 - FREQ 1263 [JOSLYN4 240.00] : B19_3pfault_Dover_trip_9L30

15 - FREQ 98503 [ELLSR 240.00] : B19_3pfault_Dover_trip_9L30

16 - FREQ 1288 [LIVOCK01 240.00] : B19_3pfault_Dover_trip_9L30

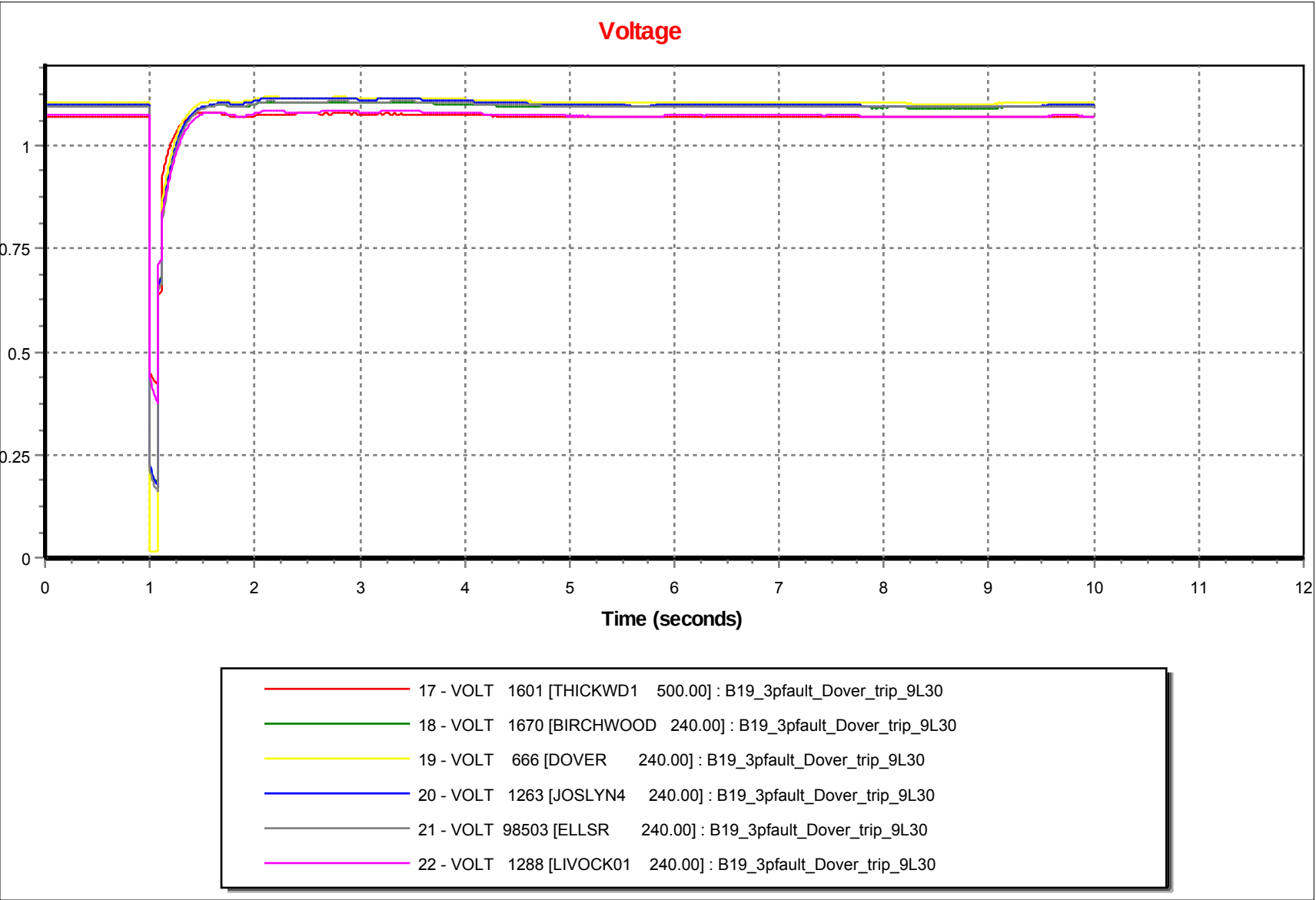
Voltage
1
0.75
0.5
0.25
0
0
1
2
3
4
5
6
7
8
9
10
11
12
Time (seconds)
17 - VOLT 1601 [THICKWD1 500.00] : B19_3pfault_Dover_trip_9L30
18 - VOLT 1670 [BIRCHWOOD 240.00] : B19_3pfault_Dover_trip_9L30
19 - VOLT 666 [DOVER 240.00] : B19_3pfault_Dover_trip_9L30
20 - VOLT 1263 [JOSLYN4 240.00] : B19_3pfault_Dover_trip_9L30
21 - VOLT 98503 [ELLSR 240.00] : B19_3pfault_Dover_trip_9L30
22 - VOLT 1288 [LIVOCK01 240.00] : B19_3pfault_Dover_trip_9L30

Relative Machine Angle

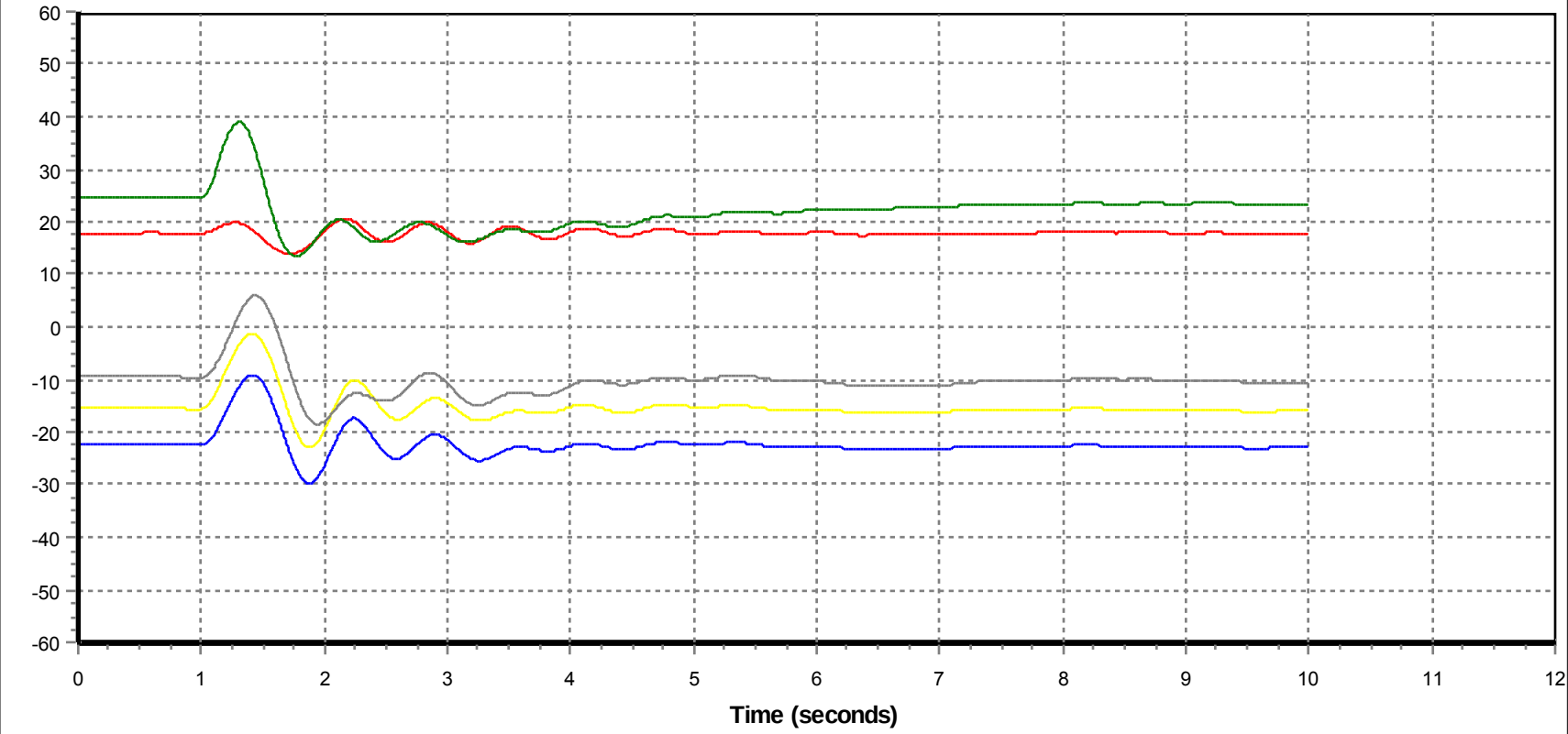

1 - ANGL 424[KEEP#2GN 19.000]2 : B20_3pfault_Thickwood_trip_9L30

2 - ANGL 18274[MACKAY2 18.000]1 : B20_3pfault_Thickwood_trip_9L30

3 - ANGL 3745[DOVERN 13.800]G1 : B20_3pfault_Thickwood_trip_9L30

4 - ANGL 19669[MRCP 13.800]1 : B20_3pfault_Thickwood_trip_9L30

5 - ANGL 10236[MUSKEG4 13.800]1 : B20_3pfault_Thickwood_trip_9L30

Machine Power

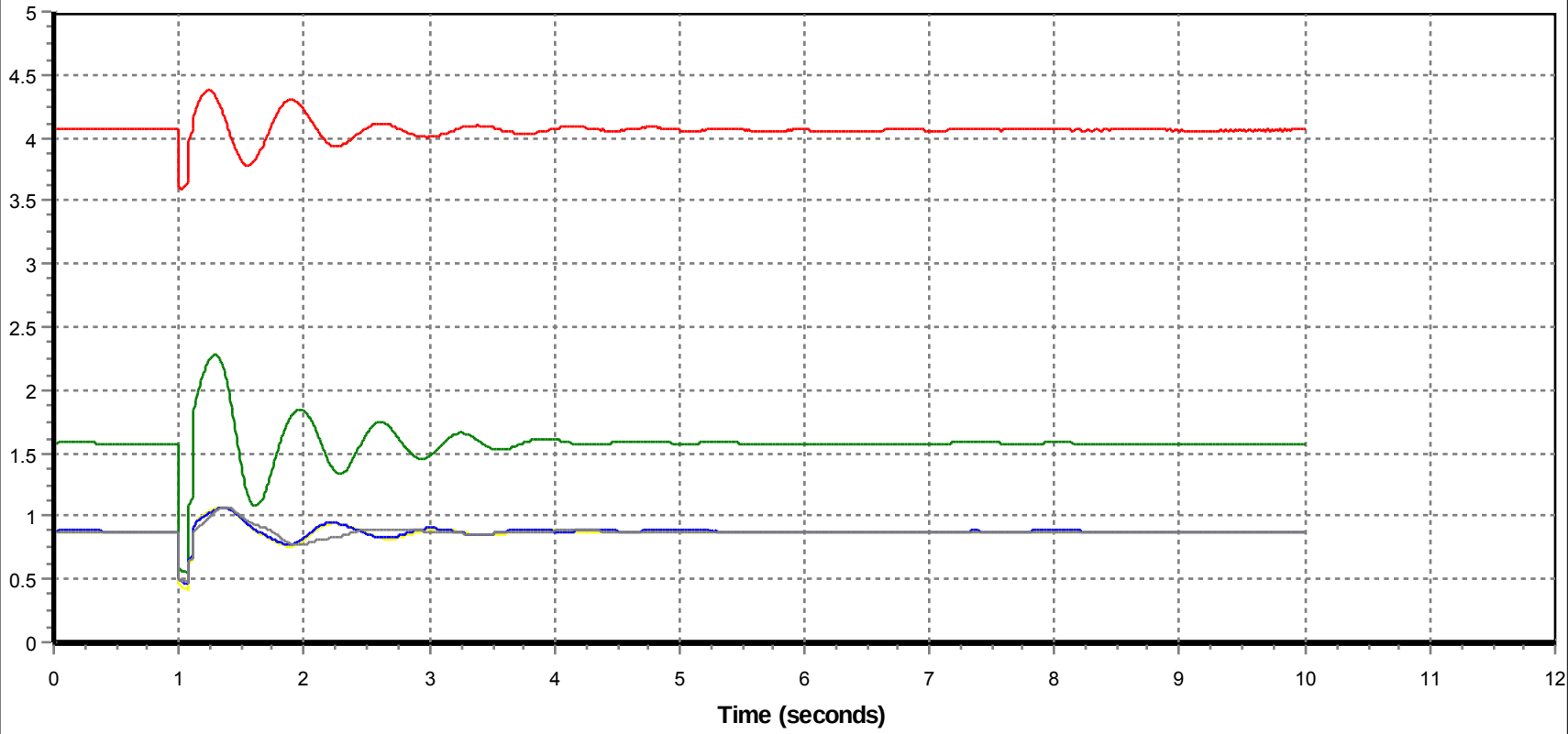

6 - POWR 424[KEEP#2GN 19.000]2 : B20_3pfault_Thickwood_trip_9L30

7 - POWR 18274[MACKAY2 18.000]1 : B20_3pfault_Thickwood_trip_9L30

8 - POWR 3745[DOVERN 13.800]G1 : B20_3pfault_Thickwood_trip_9L30

9 - POWR 19669[MRCP 13.800]1 : B20_3pfault_Thickwood_trip_9L30

10 - POWR 10236[MUSKEG4 13.800]1 : B20_3pfault_Thickwood_trip_9L30

Frequence Deviation

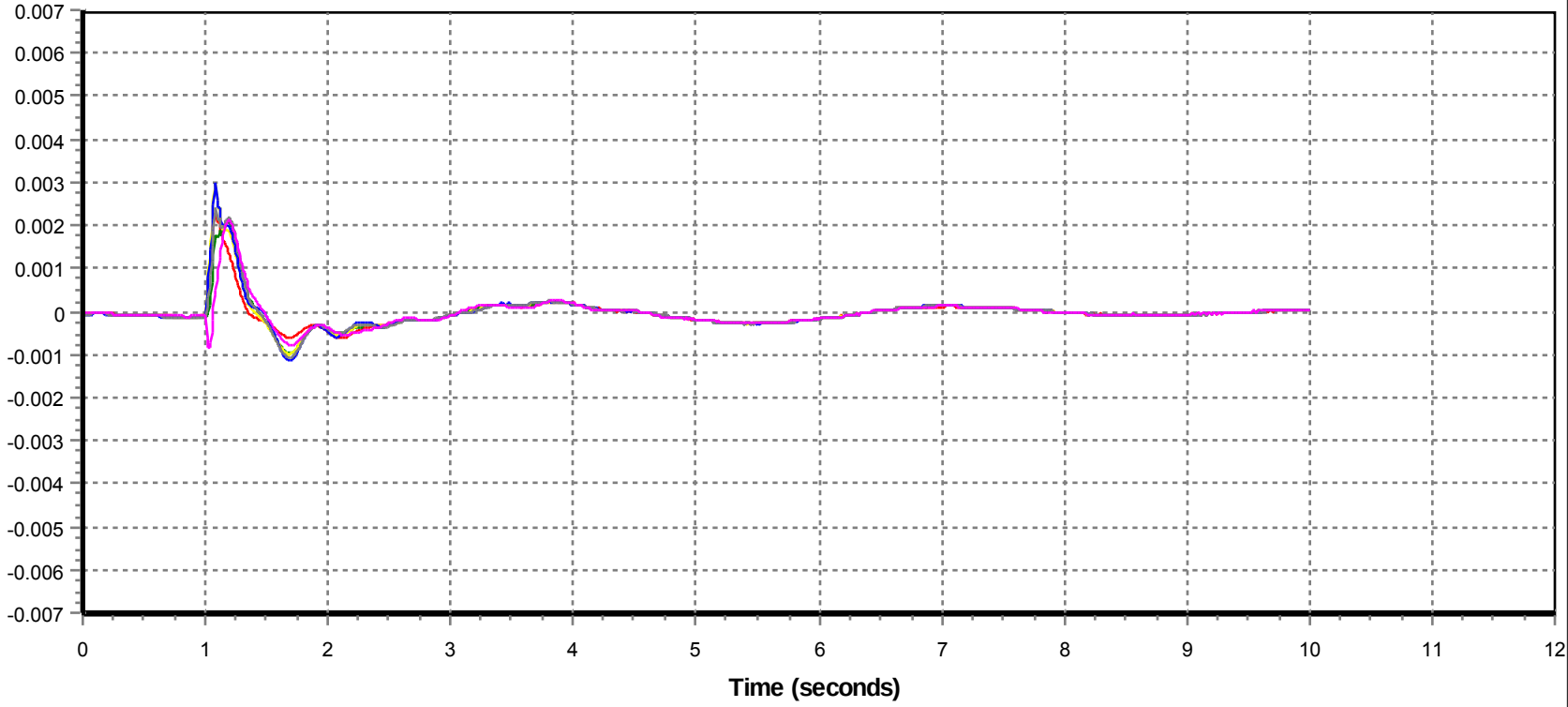

11 - FREQ 1601 [THICKWD1 500.00] : B20_3pfault_Thickwood_trip_9L30

12 - FREQ 1670 [BIRCHWOOD 240.00] : B20_3pfault_Thickwood_trip_9L30

13 - FREQ 666 [DOVER 240.00] : B20_3pfault_Thickwood_trip_9L30

14 - FREQ 1263 [JOSLYN4 240.00] : B20_3pfault_Thickwood_trip_9L30

15 - FREQ 98503 [ELLSR 240.00] : B20_3pfault_Thickwood_trip_9L30

16 - FREQ 1288 [LIVOCK01 240.00] : B20_3pfault_Thickwood_trip_9L30

Voltage

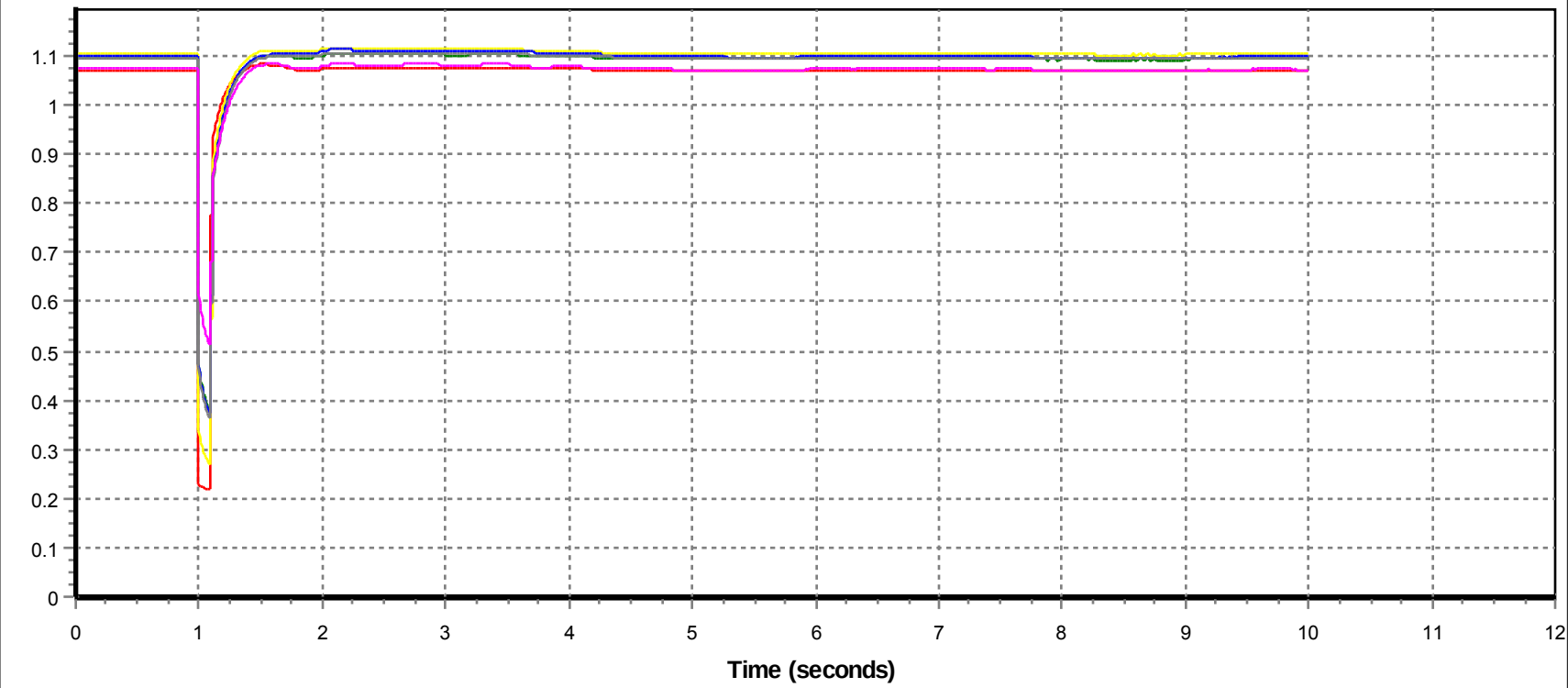

17 - VOLT 1601 [THICKWD1 500.00] : B20_3pfault_Thickwood_trip_9L30

18 - VOLT 1670 [BIRCHWOOD 240.00] : B20_3pfault_Thickwood_trip_9L30

19 - VOLT 666 [DOVER 240.00] : B20_3pfault_Thickwood_trip_9L30

20 - VOLT 1263 [JOSLYN4 240.00] : B20_3pfault_Thickwood_trip_9L30

21 - VOLT 98503 [ELLSR 240.00] : B20_3pfault_Thickwood_trip_9L30

22 - VOLT 1288 [LIVOCK01 240.00] : B20_3pfault_Thickwood_trip_9L30

Relative Machine Angle

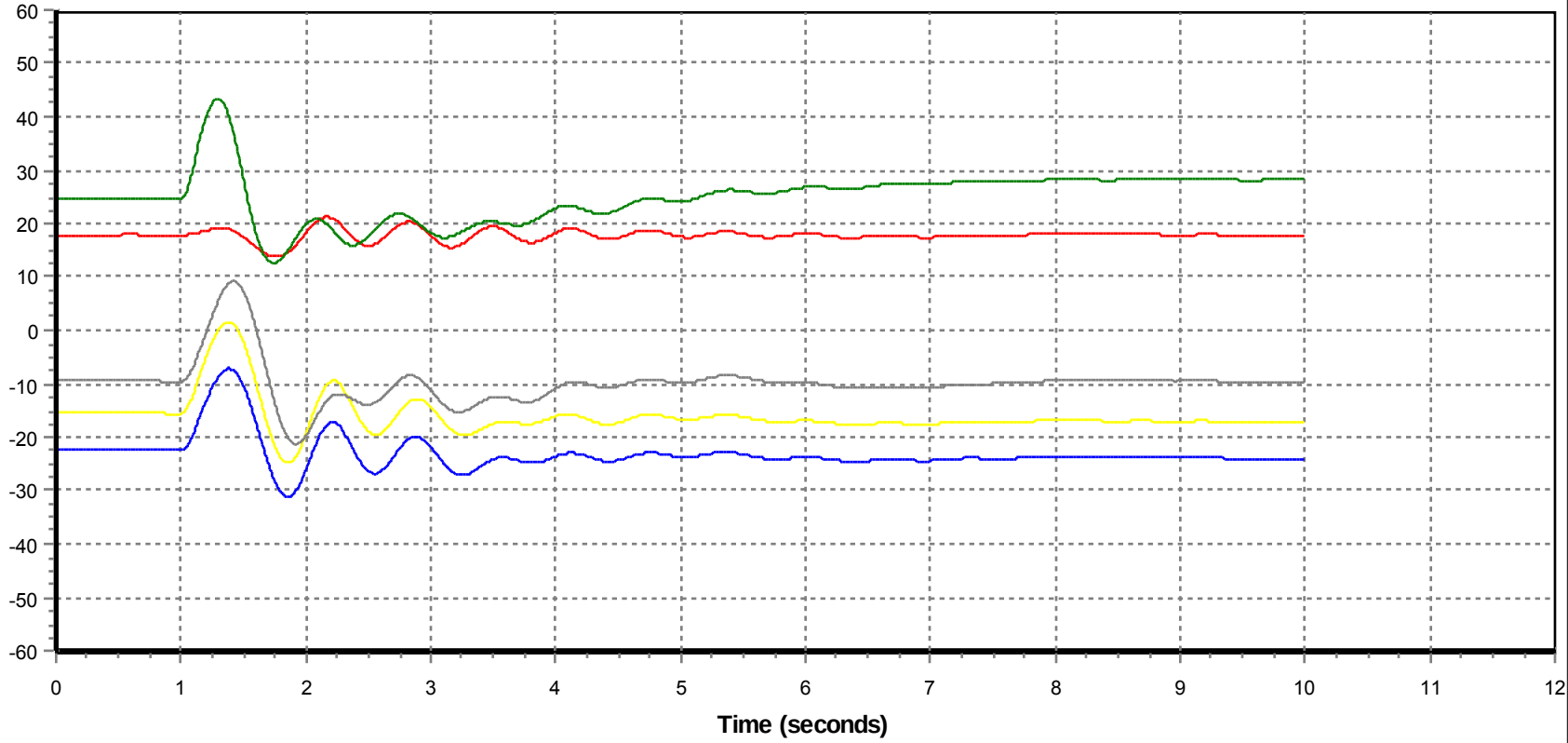

1 - ANGL 424[KEEP#2GN 19.000]2 : B21_3pfault_Dover_trip_9L01

2 - ANGL 18274[MACKAY2 18.000]1 : B21_3pfault_Dover_trip_9L01

3 - ANGL 3745[DOVERN 13.800]G1 : B21_3pfault_Dover_trip_9L01

4 - ANGL 19669[MRCP 13.800]1 : B21_3pfault_Dover_trip_9L01

5 - ANGL 10236[MUSKEG4 13.800]1 : B21_3pfault_Dover_trip_9L01

Machine Power

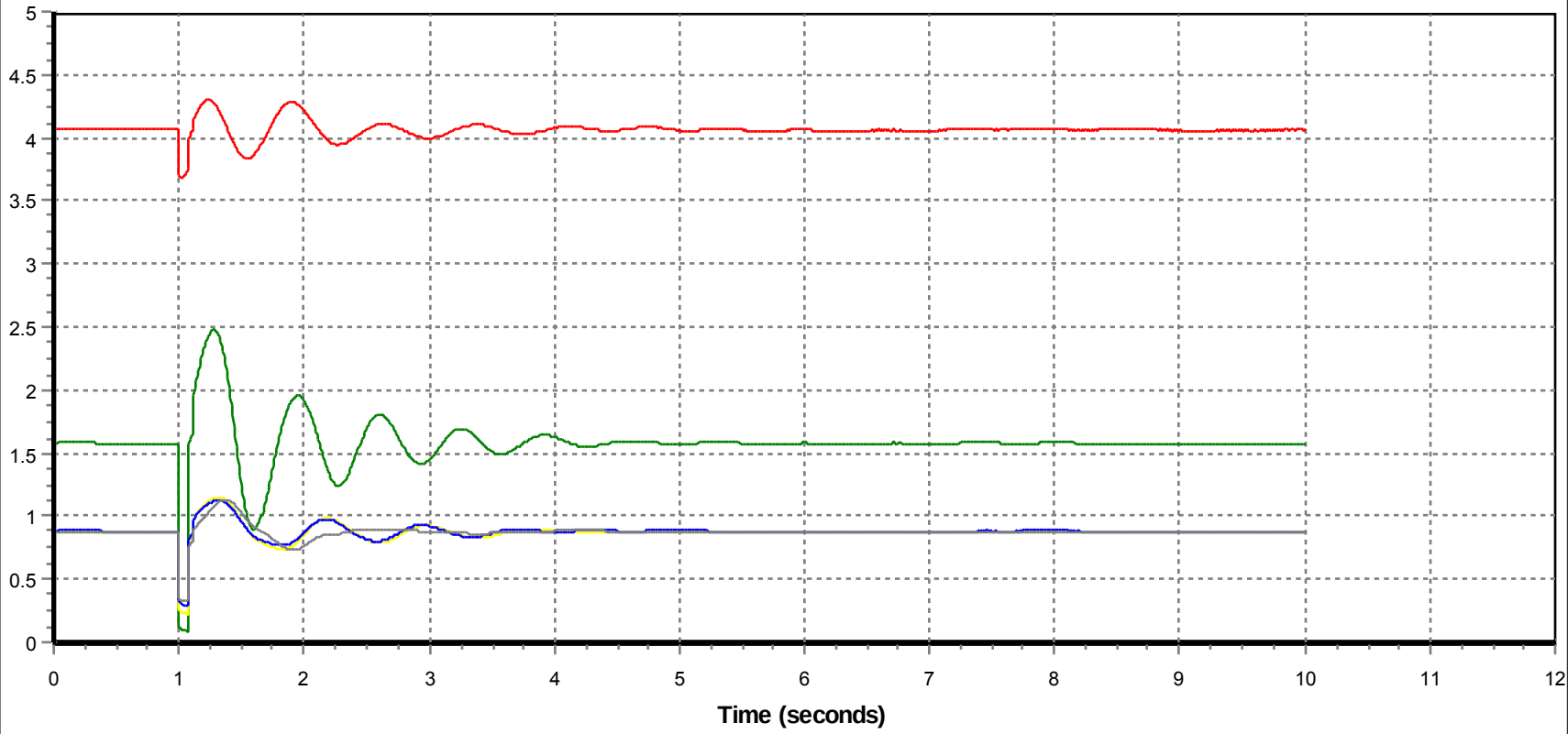

6 - POWR 424[KEEP#2GN 19.000]2 : B21_3pfault_Dover_trip_9L01

7 - POWR 18274[MACKAY2 18.000]1 : B21_3pfault_Dover_trip_9L01

8 - POWR 3745[DOVERN 13.800]G1 : B21_3pfault_Dover_trip_9L01

9 - POWR 19669[MRCP 13.800]1 : B21_3pfault_Dover_trip_9L01

10 - POWR 10236[MUSKEG4 13.800]1 : B21_3pfault_Dover_trip_9L01

Frequence Deviation

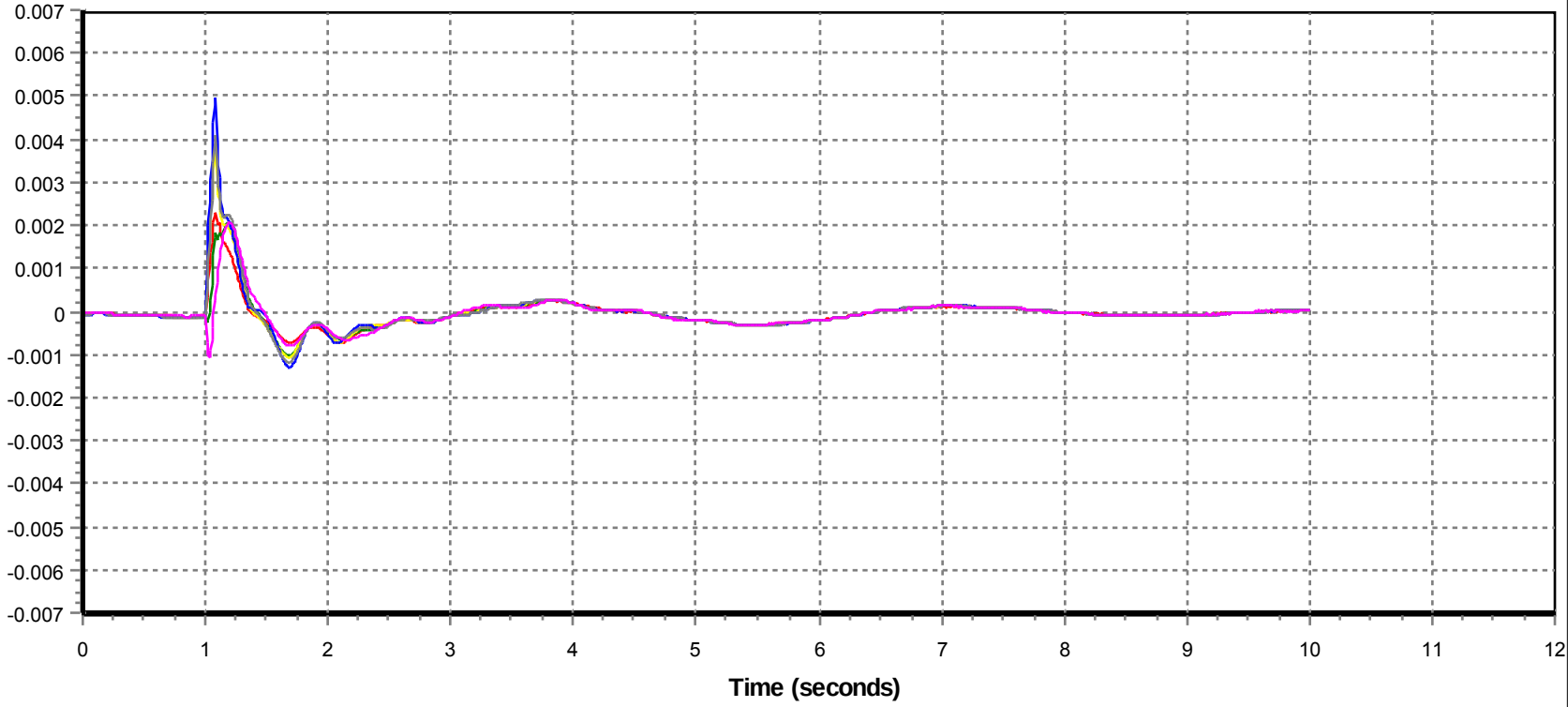

11 - FREQ 1601 [THICKWD1 500.00] : B21_3pfault_Dover_trip_9L01

12 - FREQ 1670 [BIRCHWOOD 240.00] : B21_3pfault_Dover_trip_9L01

13 - FREQ 666 [DOVER 240.00] : B21_3pfault_Dover_trip_9L01

14 - FREQ 1263 [JOSLYN4 240.00] : B21_3pfault_Dover_trip_9L01

15 - FREQ 98503 [ELLSR 240.00] : B21_3pfault_Dover_trip_9L01

16 - FREQ 1288 [LIVOCK01 240.00] : B21_3pfault_Dover_trip_9L01

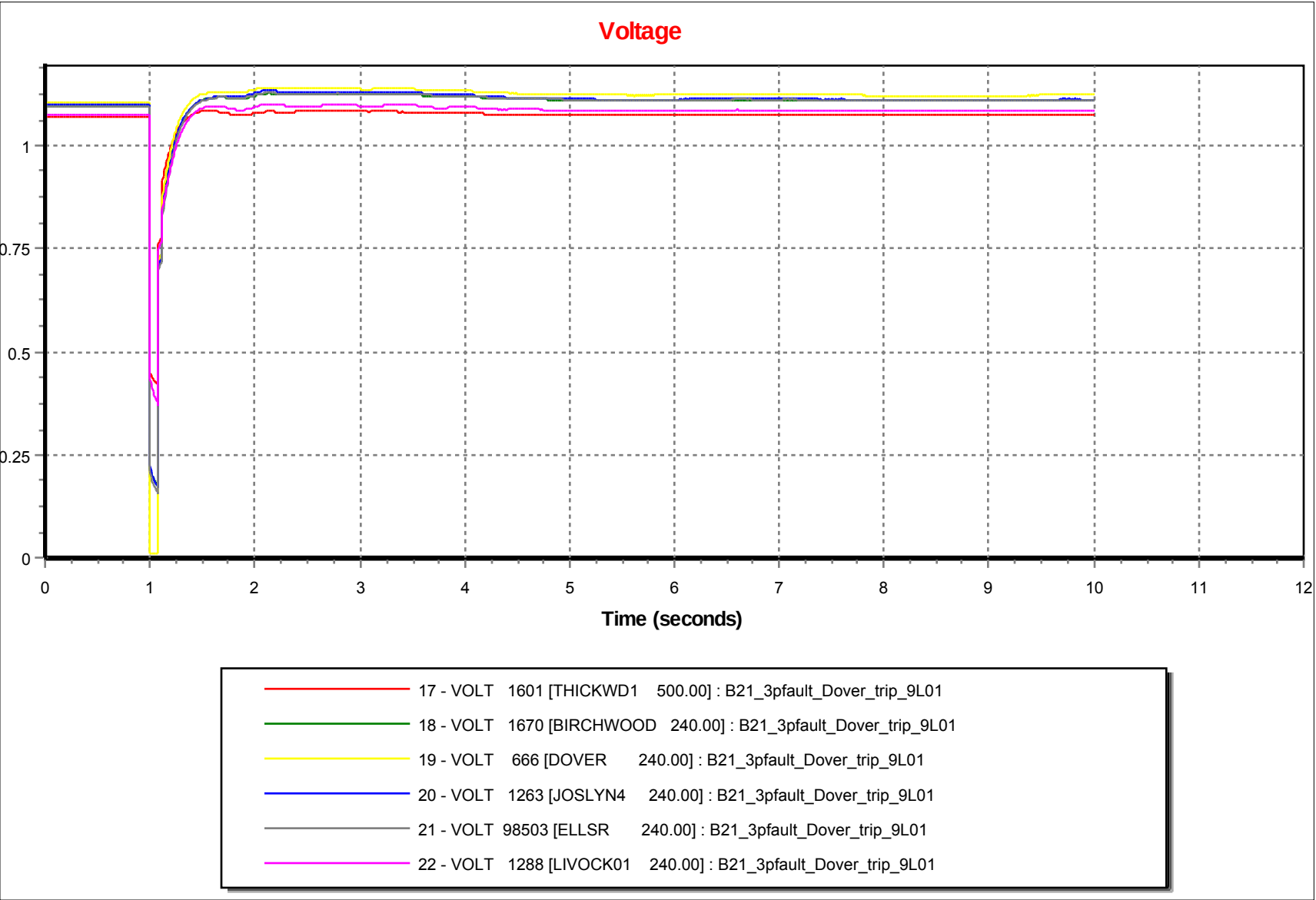
Voltage
1
0.75
0.5
0.25
0
0
1
2
3
4
5
6
7
8
9
10
11
12
Time (seconds)
17 - VOLT 1601 [THICKWD1 500.00] : B21_3pfault_Dover_trip_9L01
18 - VOLT 1670 [BIRCHWOOD 240.00] : B21_3pfault_Dover_trip_9L01
19 - VOLT 666 [DOVER 240.00] : B21_3pfault_Dover_trip_9L01
20 - VOLT 1263 [JOSLYN4 240.00] : B21_3pfault_Dover_trip_9L01
21 - VOLT 98503 [ELLSR 240.00] : B21_3pfault_Dover_trip_9L01
22 - VOLT 1288 [LIVOCK01 240.00] : B21_3pfault_Dover_trip_9L01

Relative Machine Angle

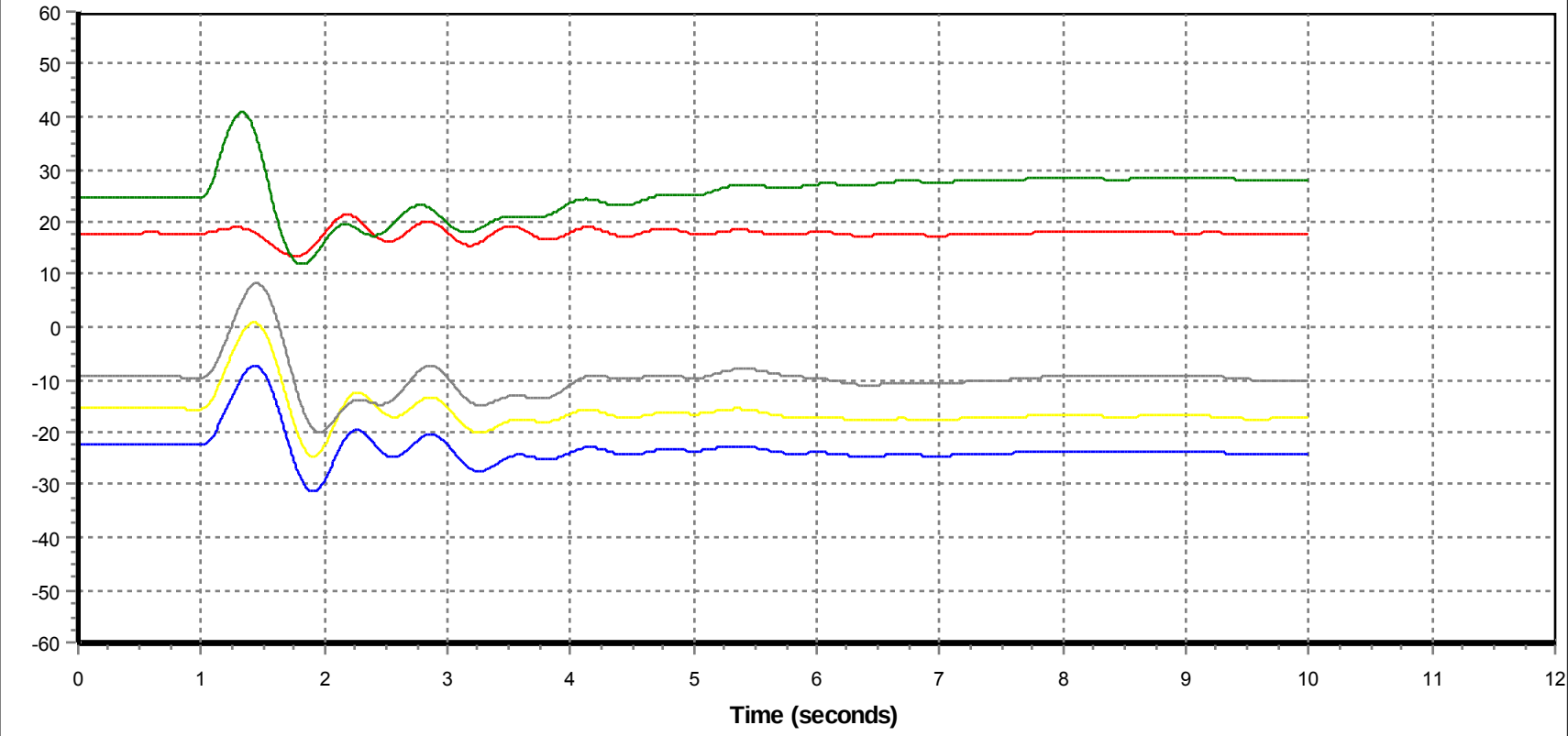

1 - ANGL 424[KEEP#2GN 19.000]2 : B22_3pfault_RuthLake_trip_9L01

2 - ANGL 18274[MACKAY2 18.000]1 : B22_3pfault_RuthLake_trip_9L01

3 - ANGL 3745[DOVERN 13.800]G1 : B22_3pfault_RuthLake_trip_9L01

4 - ANGL 19669[MRCP 13.800]1 : B22_3pfault_RuthLake_trip_9L01

5 - ANGL 10236[MUSKEG4 13.800]1 : B22_3pfault_RuthLake_trip_9L01

Machine Power

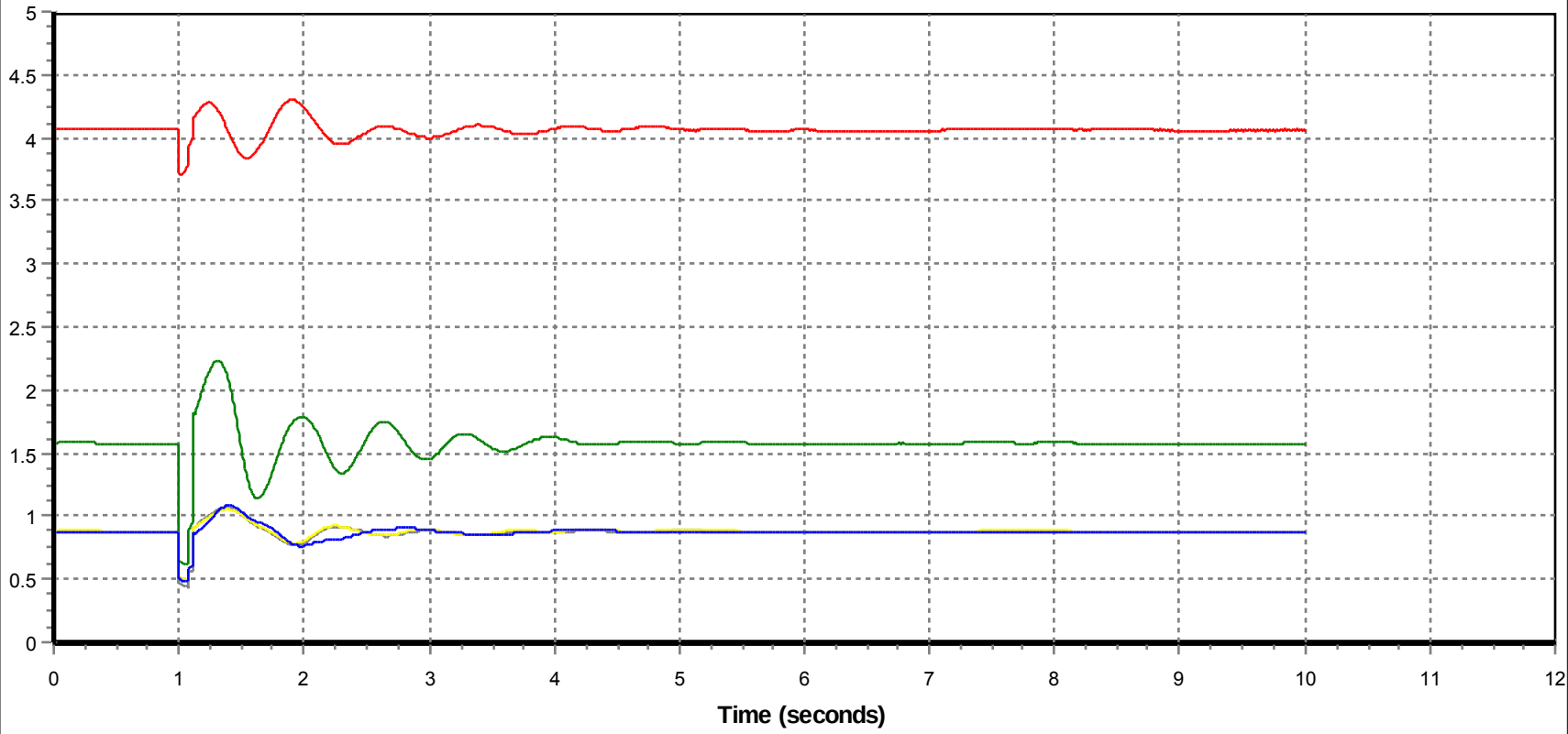

6 - POWR 424[KEEP#2GN 19.000]2 : B22_3pfault_RuthLake_trip_9L01

7 - POWR 18274[MACKAY2 18.000]1 : B22_3pfault_RuthLake_trip_9L01

8 - POWR 3745[DOVERN 13.800]G1 : B22_3pfault_RuthLake_trip_9L01

9 - POWR 19669[MRCP 13.800]1 : B22_3pfault_RuthLake_trip_9L01

10 - POWR 10236[MUSKEG4 13.800]1 : B22_3pfault_RuthLake_trip_9L01

Frequence Deviation

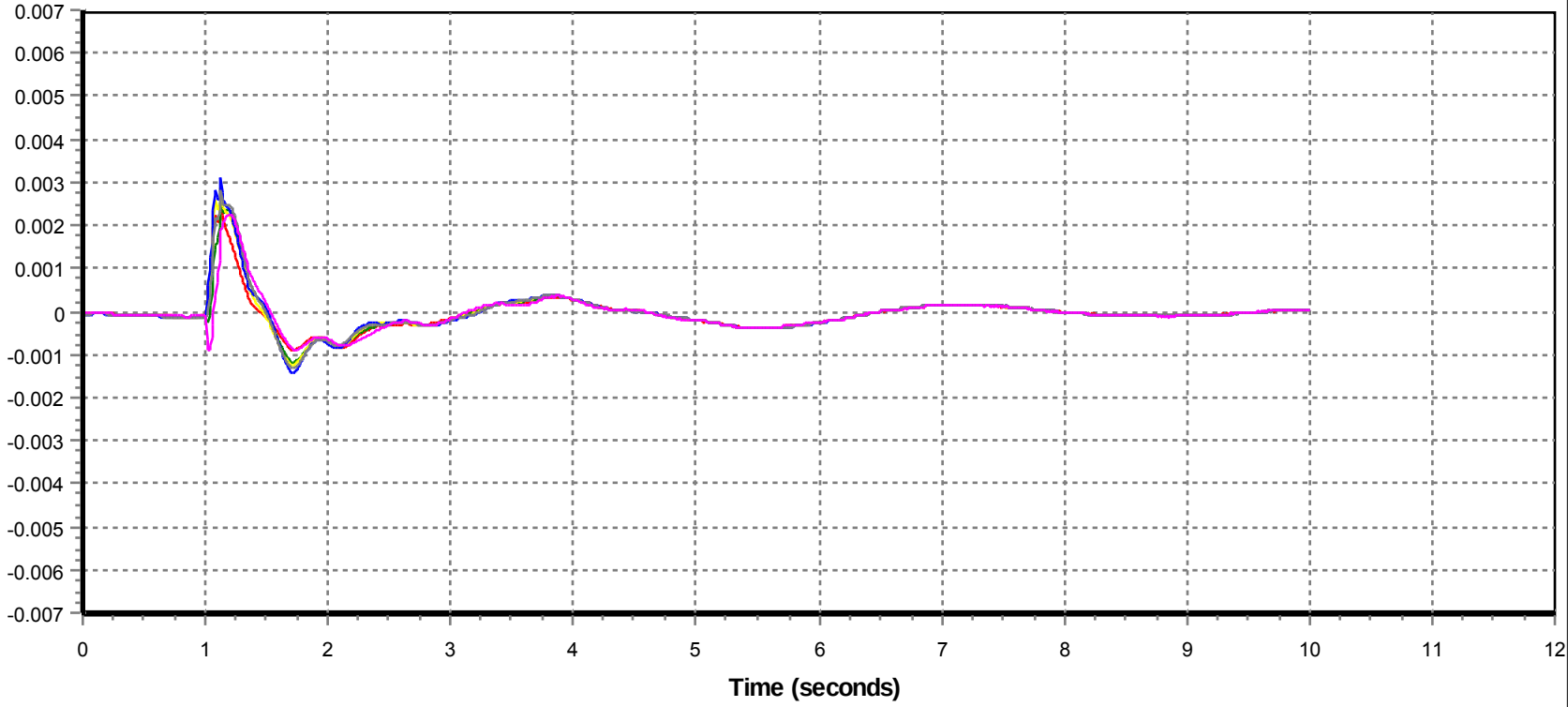

11 - FREQ 1601 [THICKWD1 500.00] : B22_3pfault_RuthLake_trip_9L01

12 - FREQ 1670 [BIRCHWOOD 240.00] : B22_3pfault_RuthLake_trip_9L01

13 - FREQ 666 [DOVER 240.00] : B22_3pfault_RuthLake_trip_9L01

14 - FREQ 1263 [JOSLYN4 240.00] : B22_3pfault_RuthLake_trip_9L01

15 - FREQ 98503 [ELLSR 240.00] : B22_3pfault_RuthLake_trip_9L01

16 - FREQ 1288 [LIVOCK01 240.00] : B22_3pfault_RuthLake_trip_9L01

Voltage

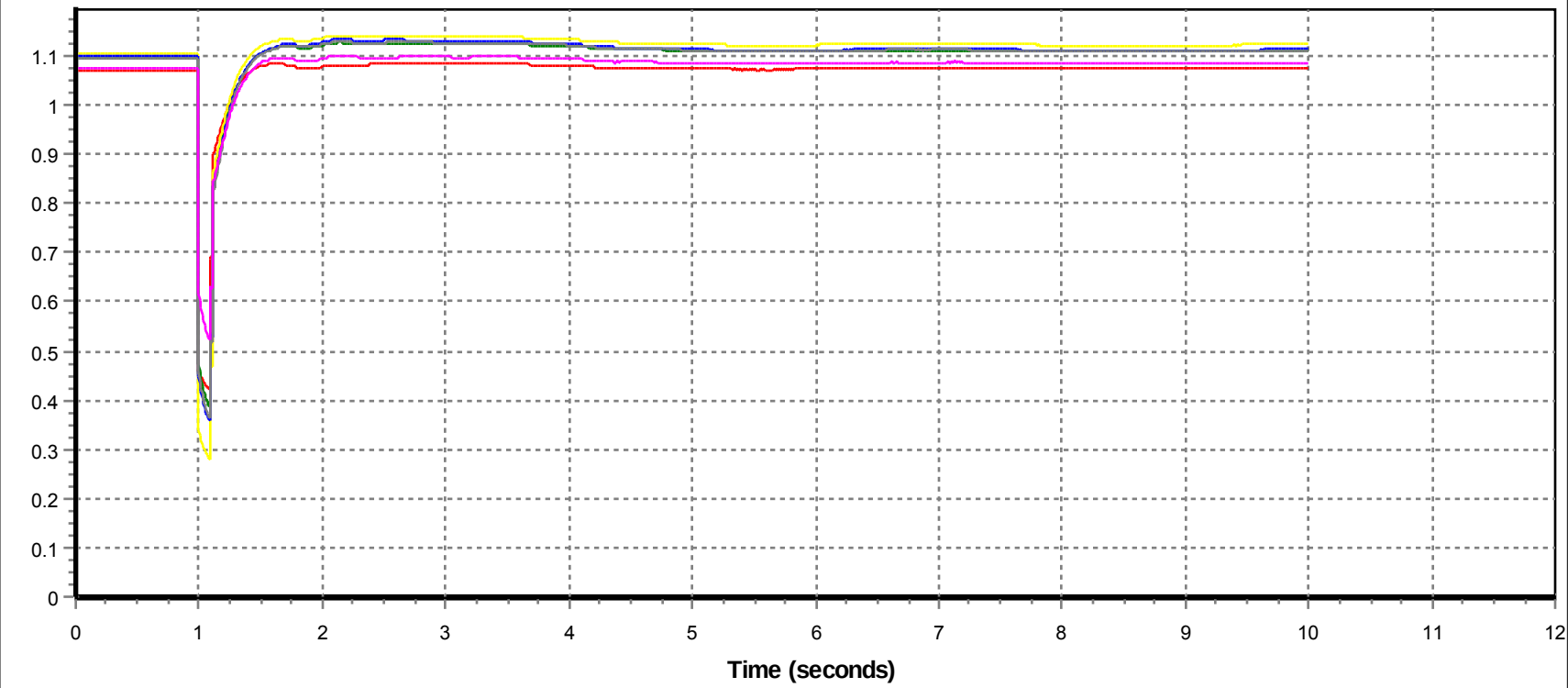

17 - VOLT 1601 [THICKWD1 500.00] : B22_3pfault_RuthLake_trip_9L01

18 - VOLT 1670 [BIRCHWOOD 240.00] : B22_3pfault_RuthLake_trip_9L01

19 - VOLT 666 [DOVER 240.00] : B22_3pfault_RuthLake_trip_9L01

20 - VOLT 1263 [JOSLYN4 240.00] : B22_3pfault_RuthLake_trip_9L01

21 - VOLT 98503 [ELLSR 240.00] : B22_3pfault_RuthLake_trip_9L01

22 - VOLT 1288 [LIVOCK01 240.00] : B22_3pfault_RuthLake_trip_9L01

Relative Machine Angle

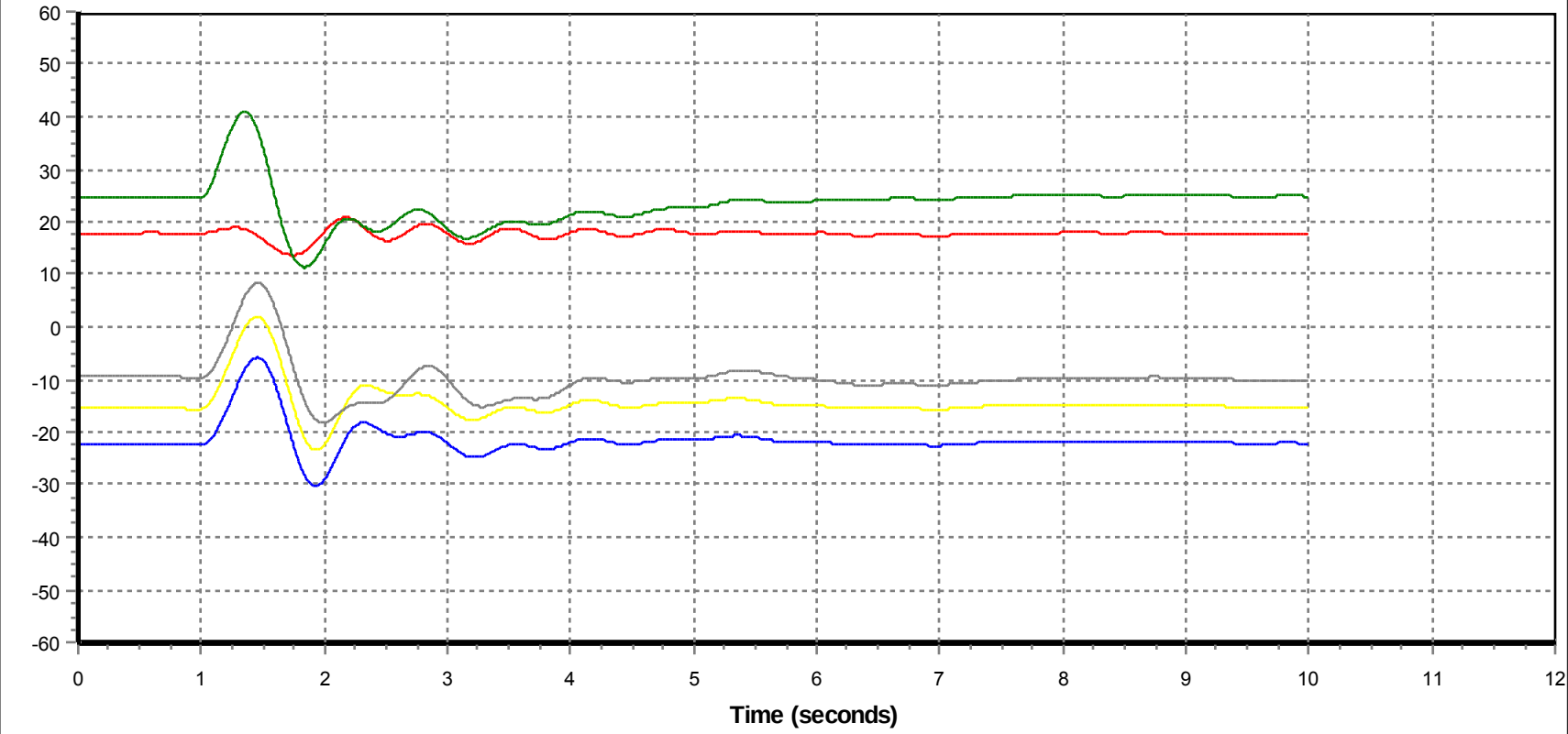

1 - ANGL 424[KEEP#2GN 19.000]2 : B23_3pfault_RuthLake_trip_9L990

2 - ANGL 18274[MACKAY2 18.000]1 : B23_3pfault_RuthLake_trip_9L990

3 - ANGL 3745[DOVERN 13.800]G1 : B23_3pfault_RuthLake_trip_9L990

4 - ANGL 19669[MRCP 13.800]1 : B23_3pfault_RuthLake_trip_9L990

5 - ANGL 10236[MUSKEG4 13.800]1 : B23_3pfault_RuthLake_trip_9L990

Machine Power

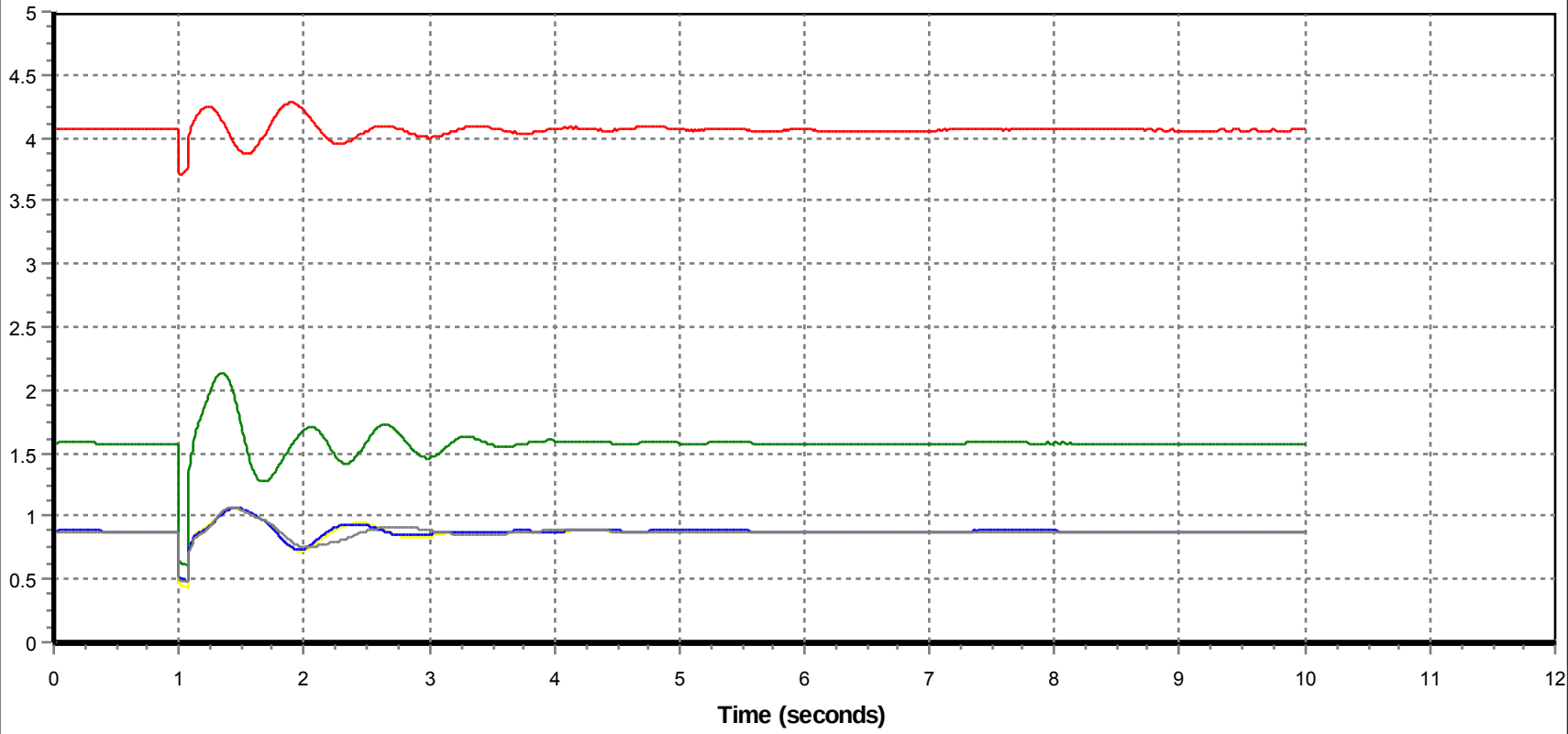

6 - POWR 424[KEEP#2GN 19.000]2 : B23_3pfault_RuthLake_trip_9L990

7 - POWR 18274[MACKAY2 18.000]1 : B23_3pfault_RuthLake_trip_9L990

8 - POWR 3745[DOVERN 13.800]G1 : B23_3pfault_RuthLake_trip_9L990

9 - POWR 19669[MRCP 13.800]1 : B23_3pfault_RuthLake_trip_9L990

10 - POWR 10236[MUSKEG4 13.800]1 : B23_3pfault_RuthLake_trip_9L990

Frequence Deviation

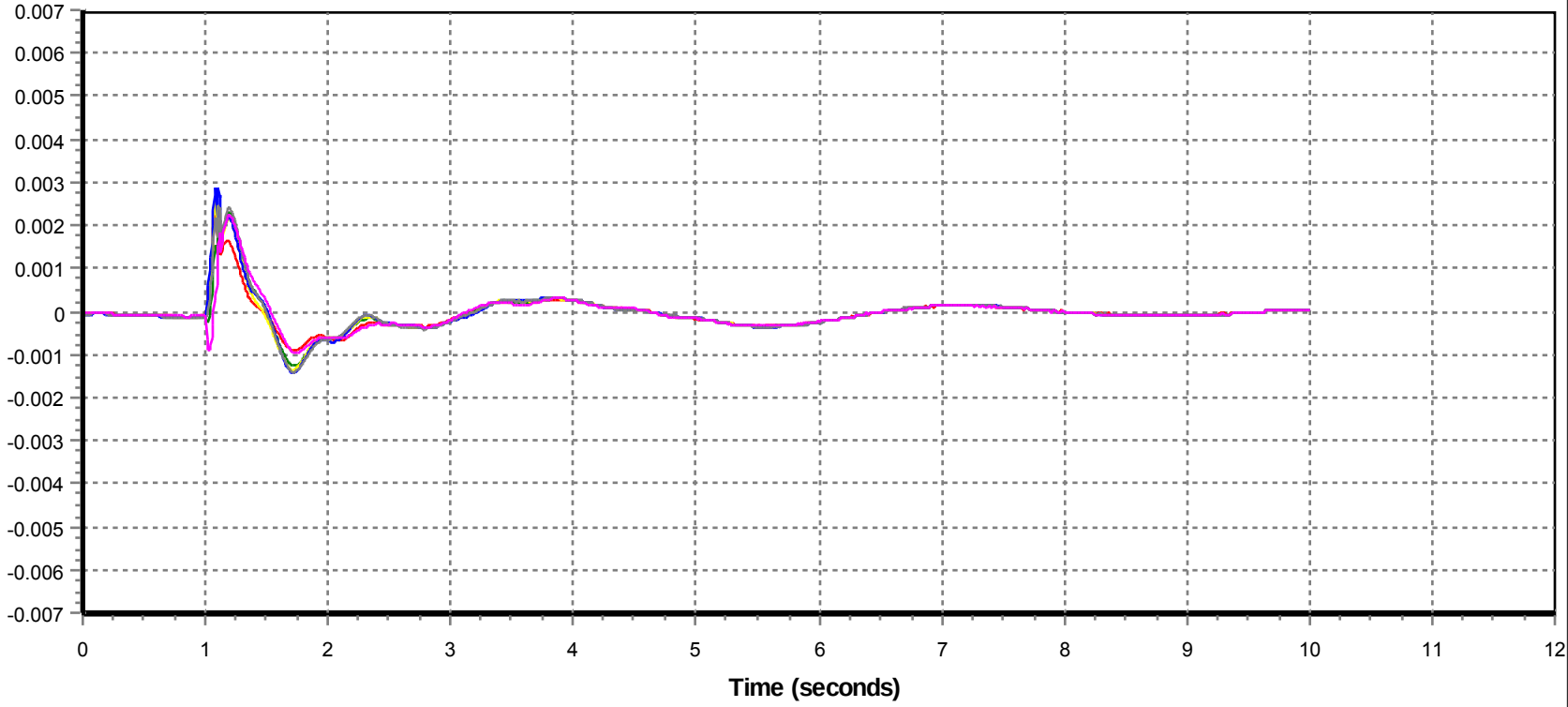

11 - FREQ 1601 [THICKWD1 500.00] : B23_3pfault_RuthLake_trip_9L990

12 - FREQ 1670 [BIRCHWOOD 240.00] : B23_3pfault_RuthLake_trip_9L990

13 - FREQ 666 [DOVER 240.00] : B23_3pfault_RuthLake_trip_9L990

14 - FREQ 1263 [JOSLYN4 240.00] : B23_3pfault_RuthLake_trip_9L990

15 - FREQ 98503 [ELLSR 240.00] : B23_3pfault_RuthLake_trip_9L990

16 - FREQ 1288 [LIVOCK01 240.00] : B23_3pfault_RuthLake_trip_9L990

Voltage

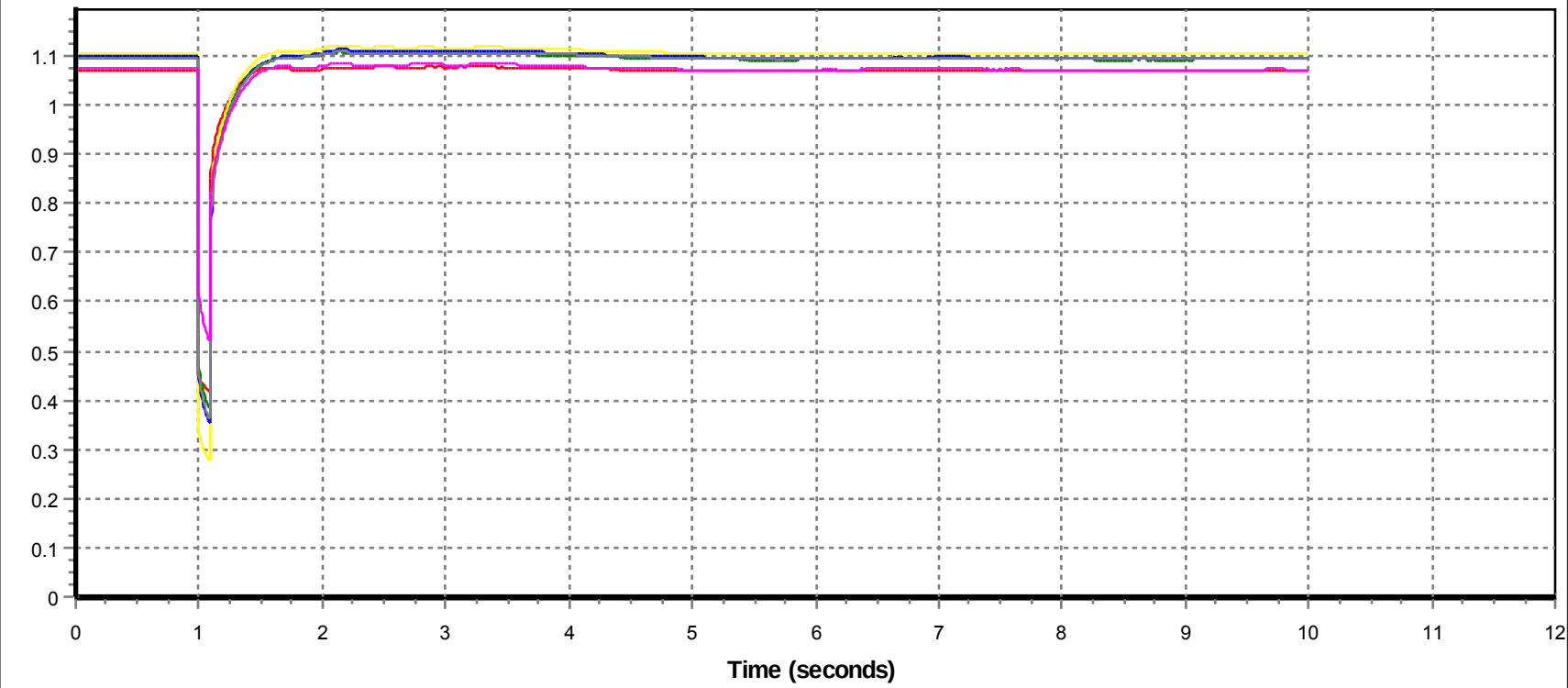

17 - VOLT 1601 [THICKWD1 500.00] : B23_3pfault_RuthLake_trip_9L990

18 - VOLT 1670 [BIRCHWOOD 240.00] : B23_3pfault_RuthLake_trip_9L990

19 - VOLT 666 [DOVER 240.00] : B23_3pfault_RuthLake_trip_9L990

20 - VOLT 1263 [JOSLYN4 240.00] : B23_3pfault_RuthLake_trip_9L990

21 - VOLT 98503 [ELLSR 240.00] : B23_3pfault_RuthLake_trip_9L990

22 - VOLT 1288 [LIVOCK01 240.00] : B23_3pfault_RuthLake_trip_9L990

Relative Machine Angle

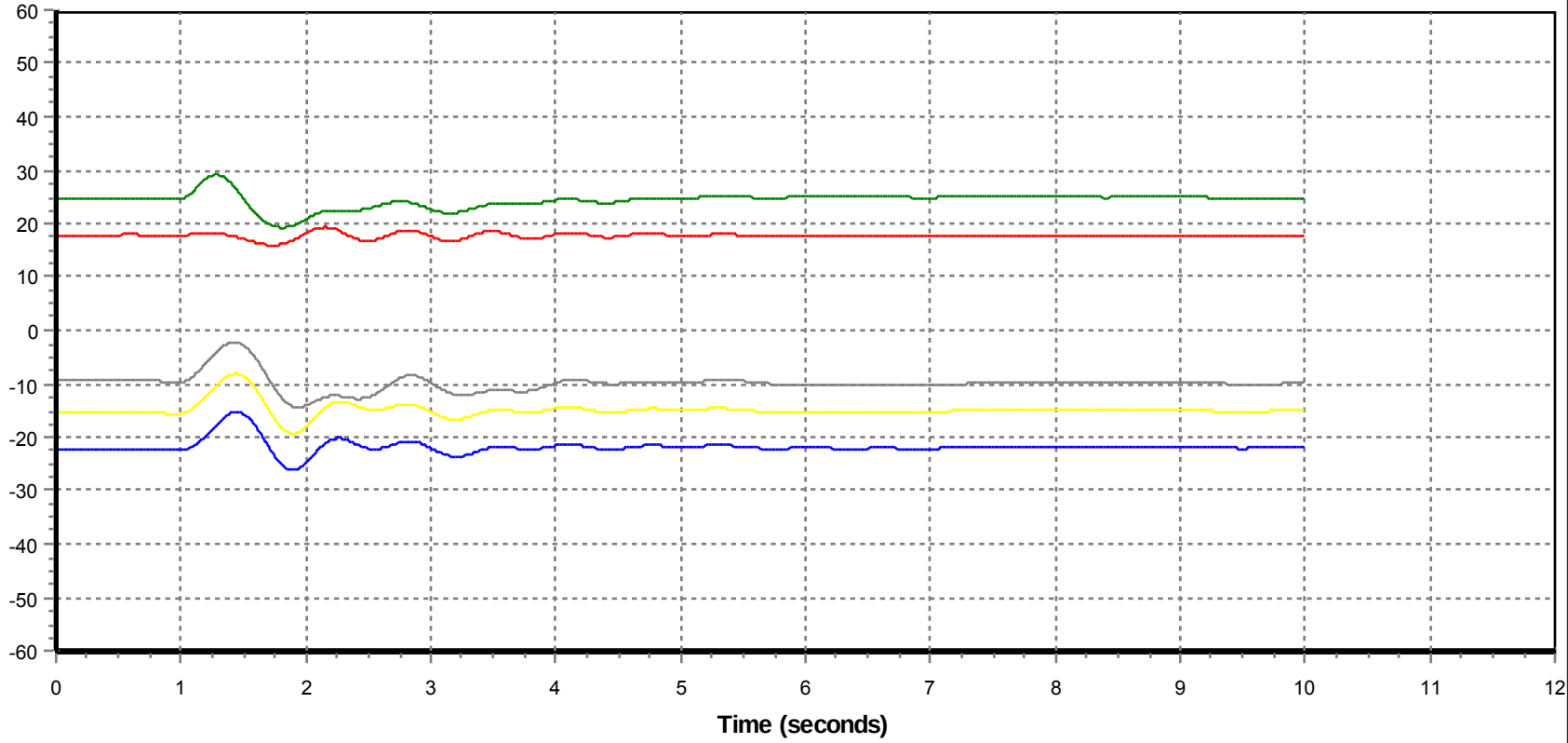

1 - ANGL 424[KEEP#2GN 19.000]2 : B24_3pfault_SaltCreek_trip_9L990

2 - ANGL 18274[MACKAY2 18.000]1 : B24_3pfault_SaltCreek_trip_9L990

3 - ANGL 3745[DOVERN 13.800]G1 : B24_3pfault_SaltCreek_trip_9L990

4 - ANGL 19669[MRCP 13.800]1 : B24_3pfault_SaltCreek_trip_9L990

5 - ANGL 10236[MUSKEG4 13.800]1 : B24_3pfault_SaltCreek_trip_9L990

Machine Power

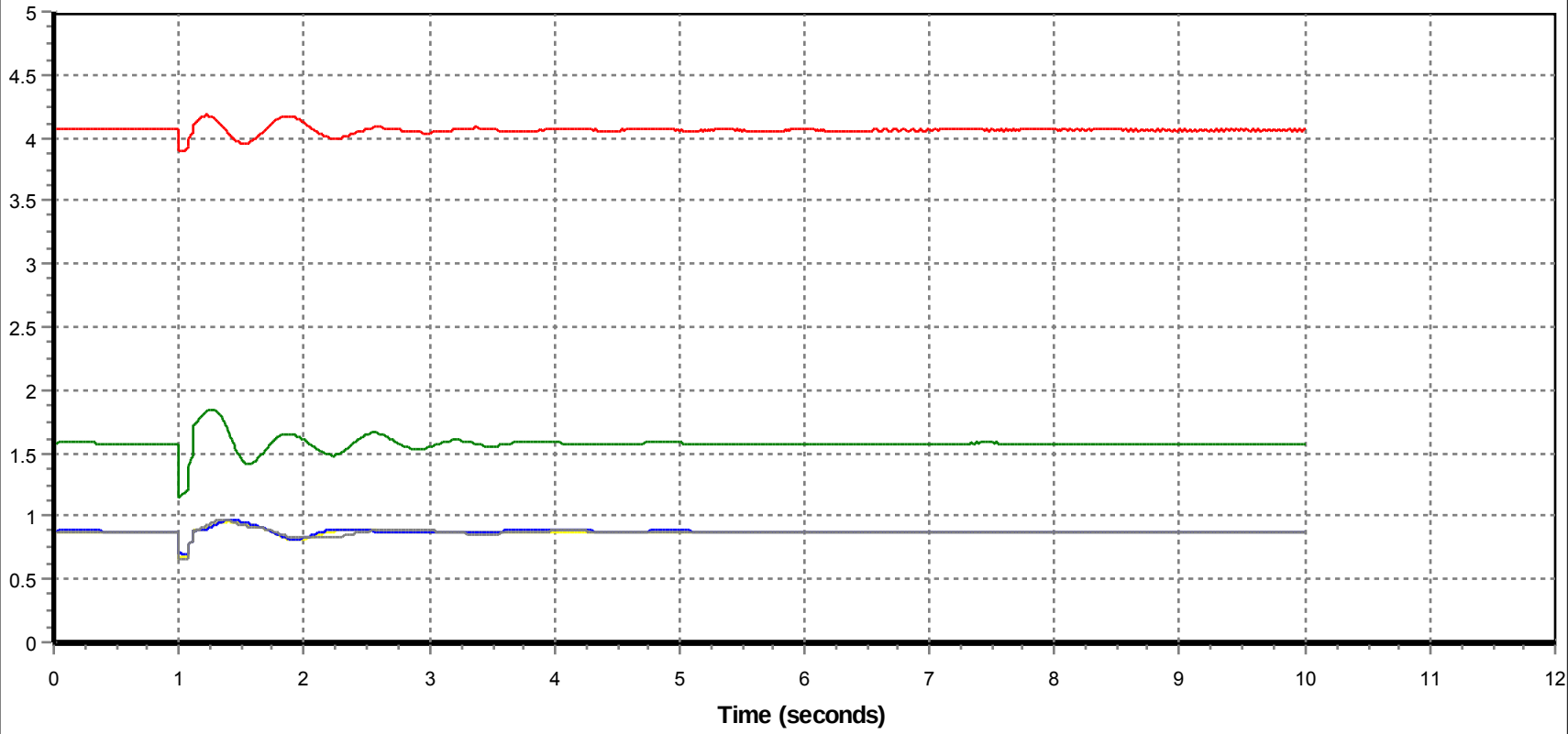

6 - POWR 424[KEEP#2GN 19.000]2 : B24_3pfault_SaltCreek_trip_9L990

7 - POWR 18274[MACKAY2 18.000]1 : B24_3pfault_SaltCreek_trip_9L990

8 - POWR 3745[DOVERN 13.800]G1 : B24_3pfault_SaltCreek_trip_9L990

9 - POWR 19669[MRCP 13.800]1 : B24_3pfault_SaltCreek_trip_9L990

10 - POWR 10236[MUSKEG4 13.800]1 : B24_3pfault_SaltCreek_trip_9L990

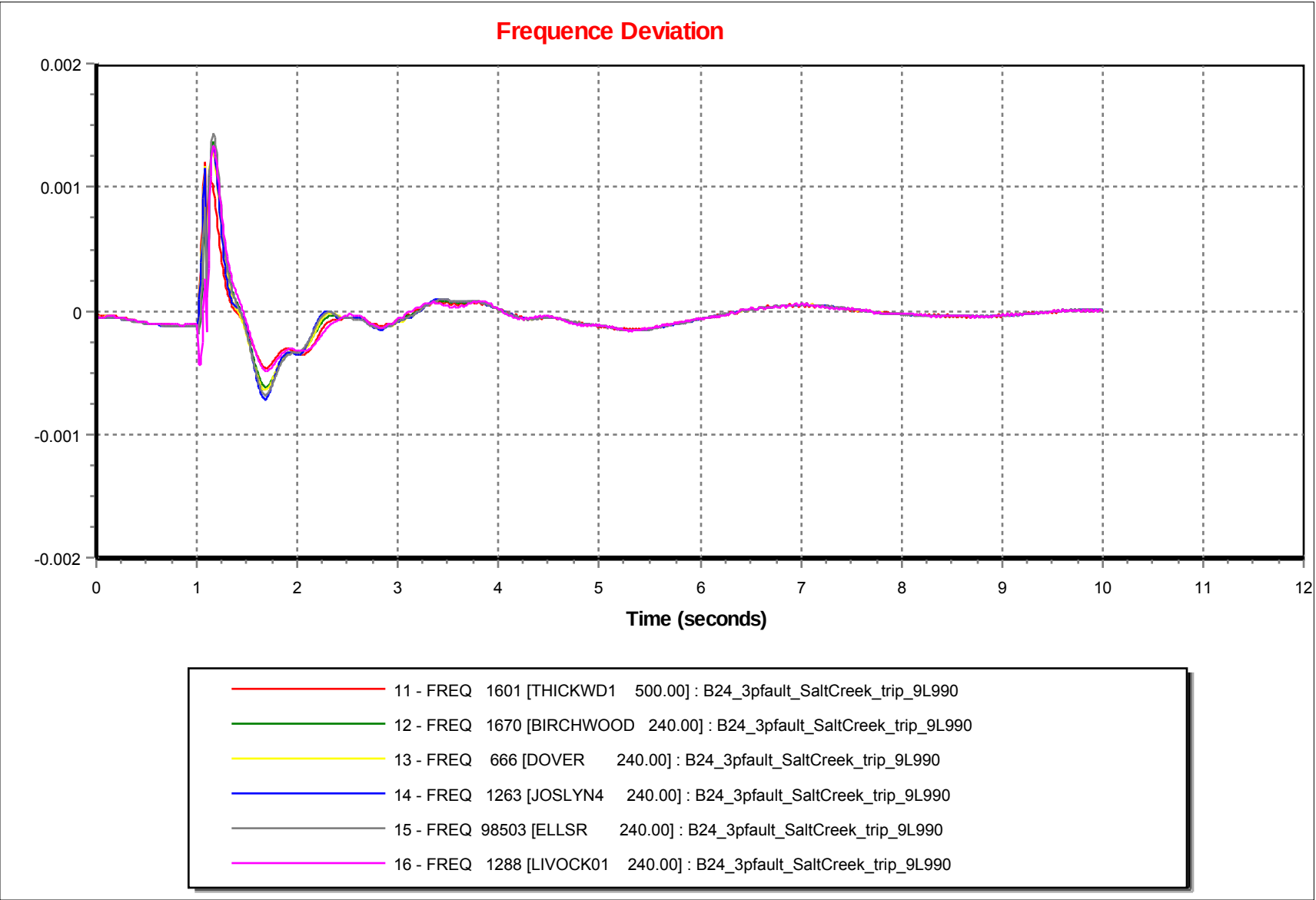
Frequence Deviation
0.002
0.001
0
-0.001
-0.002
0
1
2
3
4
5
6
7
8
9
10
11
12
Time (seconds)
11 - FREQ 1601 [THICKWD1 500.00] : B24_3pfault_SaltCreek_trip_9L990
12 - FREQ 1670 [BIRCHWOOD 240.00] : B24_3pfault_SaltCreek_trip_9L990
13 - FREQ 666 [DOVER 240.00] : B24_3pfault_SaltCreek_trip_9L990
14 - FREQ 1263 [JOSLYN4 240.00] : B24_3pfault_SaltCreek_trip_9L990
15 - FREQ 98503 [ELLSR 240.00] : B24_3pfault_SaltCreek_trip_9L990
16 - FREQ 1288 [LIVOCK01 240.00] : B24_3pfault_SaltCreek_trip_9L990

Voltage

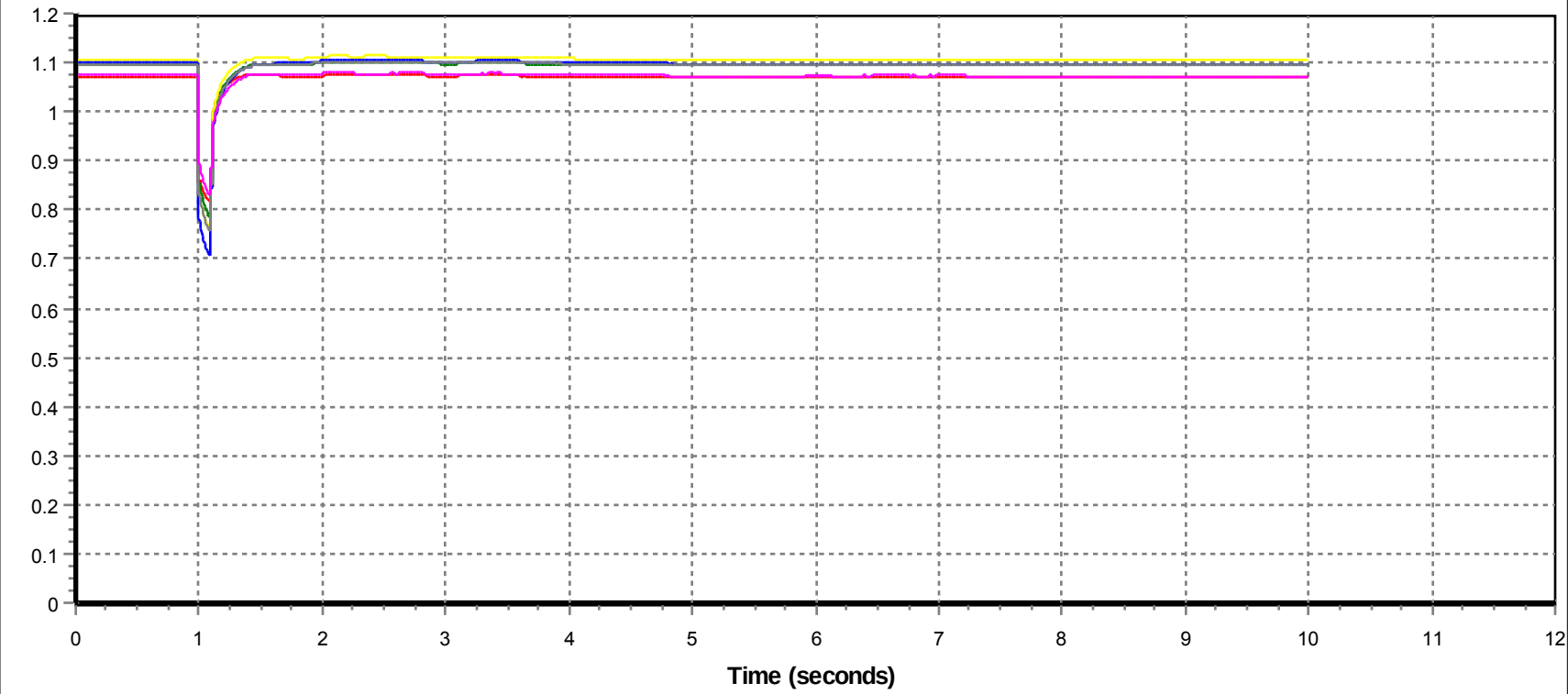

17 - VOLT 1601 [THICKWD1 500.00] : B24_3pfault_SaltCreek_trip_9L990

18 - VOLT 1670 [BIRCHWOOD 240.00] : B24_3pfault_SaltCreek_trip_9L990

19 - VOLT 666 [DOVER 240.00] : B24_3pfault_SaltCreek_trip_9L990

20 - VOLT 1263 [JOSLYN4 240.00] : B24_3pfault_SaltCreek_trip_9L990

21 - VOLT 98503 [ELLSR 240.00] : B24_3pfault_SaltCreek_trip_9L990

22 - VOLT 1288 [LIVOCK01 240.00] : B24_3pfault_SaltCreek_trip_9L990

Relative Machine Angle

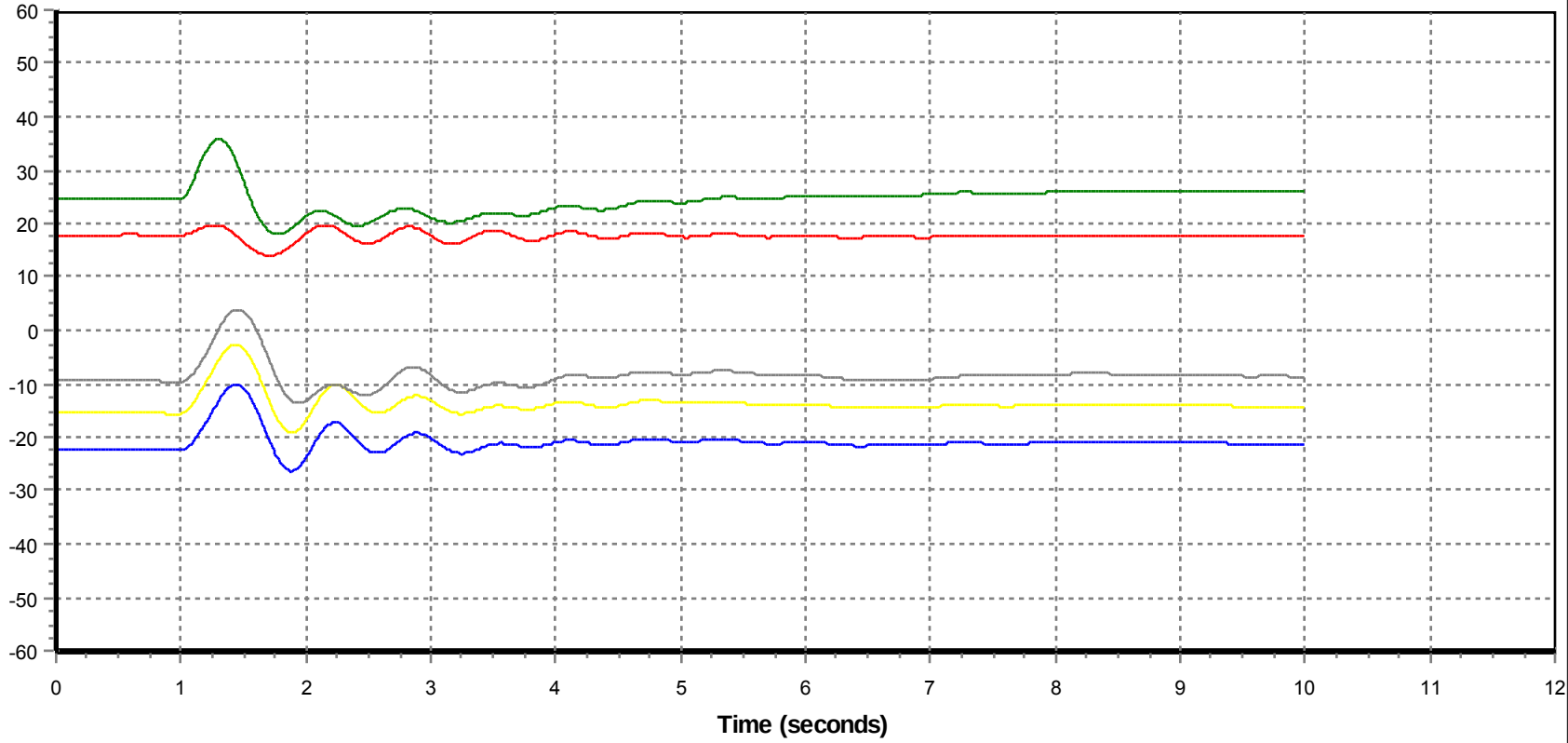

1 - ANGL 424[KEEP#2GN 19.000]2 : B25_3pfault_Thickwood_trip_9L990

2 - ANGL 18274[MACKAY2 18.000]1 : B25_3pfault_Thickwood_trip_9L990

3 - ANGL 3745[DOVERN 13.800]G1 : B25_3pfault_Thickwood_trip_9L990

4 - ANGL 19669[MRCP 13.800]1 : B25_3pfault_Thickwood_trip_9L990

5 - ANGL 10236[MUSKEG4 13.800]1 : B25_3pfault_Thickwood_trip_9L990

Machine Power

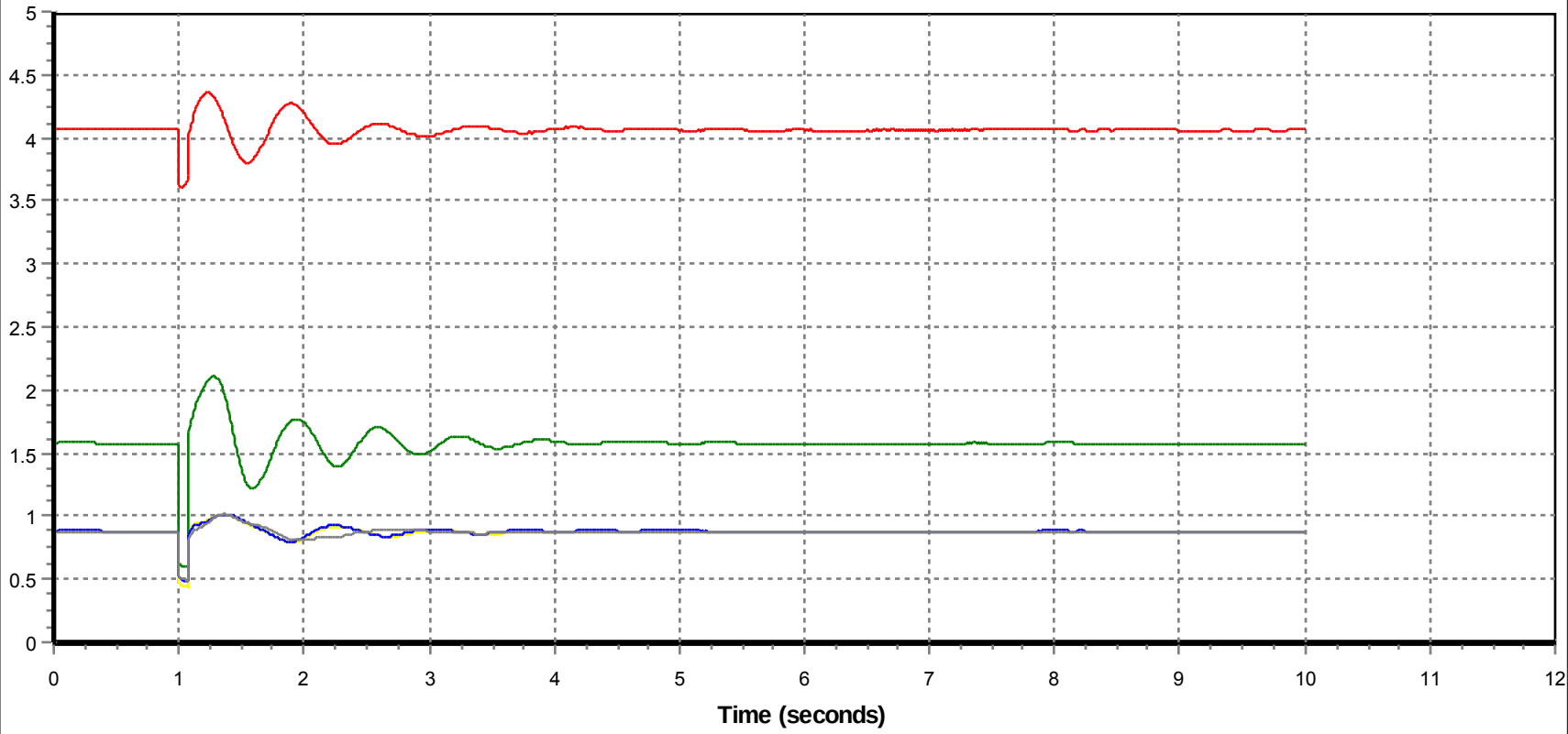

6 - POWR 424[KEEP#2GN 19.000]2 : B25_3pfault_Thickwood_trip_9L990

7 - POWR 18274[MACKAY2 18.000]1 : B25_3pfault_Thickwood_trip_9L990

8 - POWR 3745[DOVERN 13.800]G1 : B25_3pfault_Thickwood_trip_9L990

9 - POWR 19669[MRCP 13.800]1 : B25_3pfault_Thickwood_trip_9L990

10 - POWR 10236[MUSKEG4 13.800]1 : B25_3pfault_Thickwood_trip_9L990

Frequence Deviation

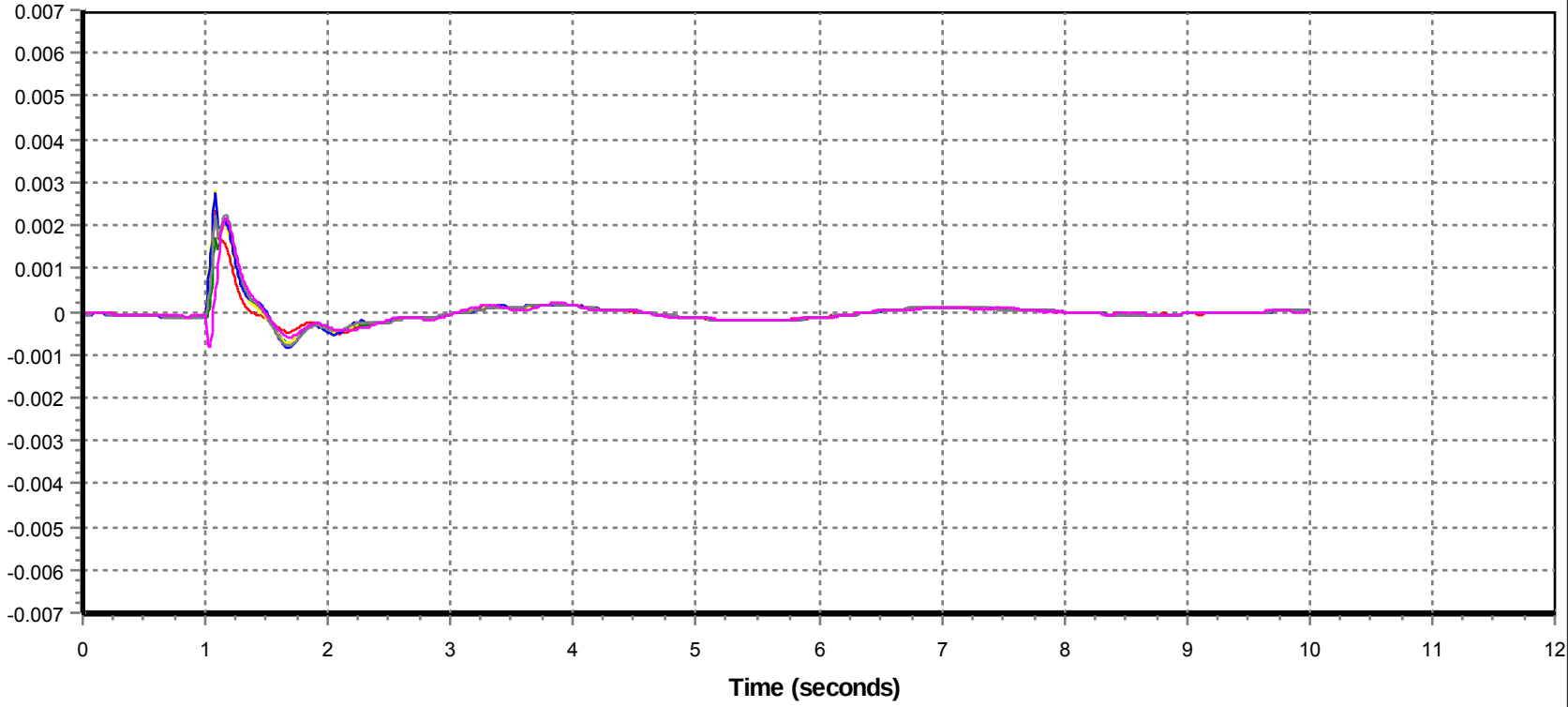

11 - FREQ 1601 [THICKWD1 500.00] : B25_3pfault_Thickwood_trip_9L990

12 - FREQ 1670 [BIRCHWOOD 240.00] : B25_3pfault_Thickwood_trip_9L990

13 - FREQ 666 [DOVER 240.00] : B25_3pfault_Thickwood_trip_9L990

14 - FREQ 1263 [JOSLYN4 240.00] : B25_3pfault_Thickwood_trip_9L990

15 - FREQ 98503 [ELLSR 240.00] : B25_3pfault_Thickwood_trip_9L990

16 - FREQ 1288 [LIVOCK01 240.00] : B25_3pfault_Thickwood_trip_9L990

Voltage

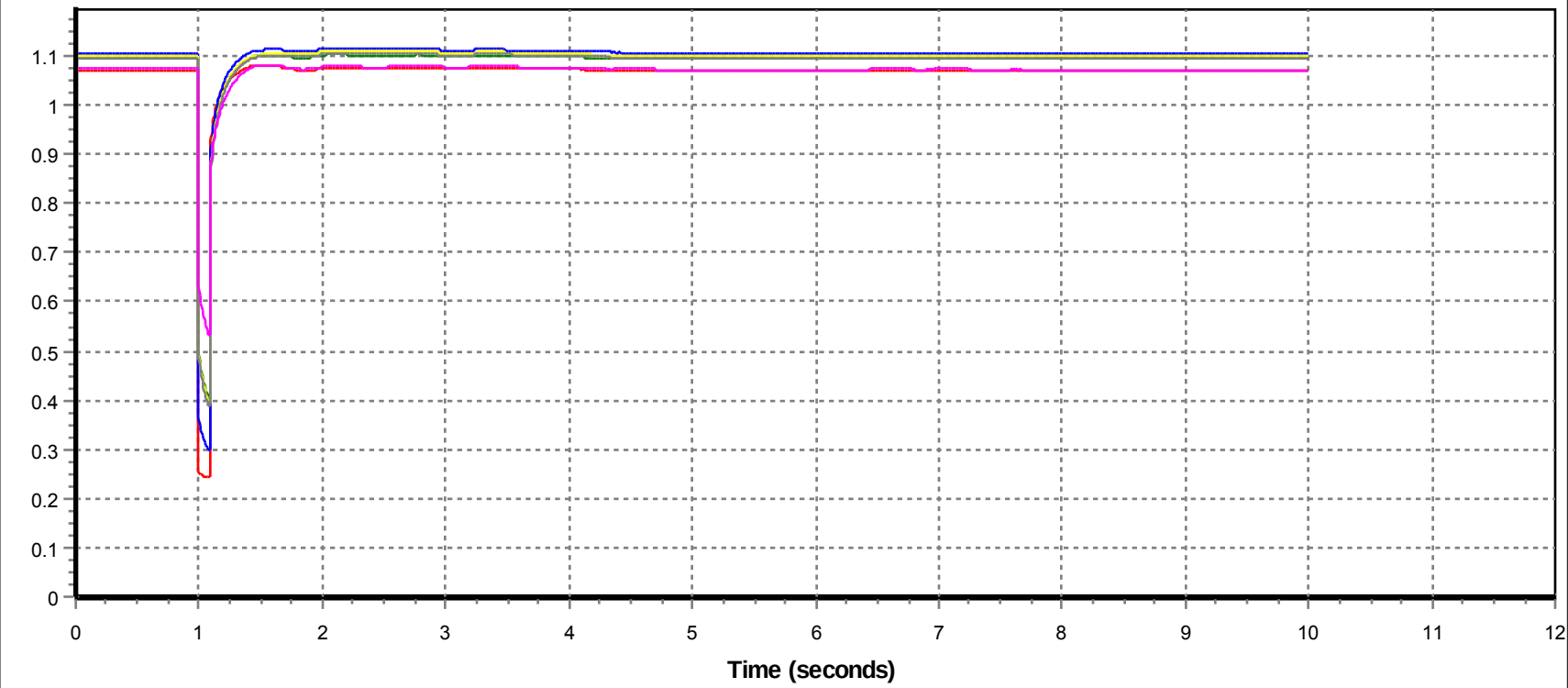

17 - VOLT 1601 [THICKWD1 500.00] : B25_3pfault_Thickwood_trip_9L990

18 - VOLT 1670 [BIRCHWOOD 240.00] : B25_3pfault_Thickwood_trip_9L990

19 - VOLT 666 [DOVER 240.00] : B25_3pfault_Thickwood_trip_9L990

20 - VOLT 1263 [JOSLYN4 240.00] : B25_3pfault_Thickwood_trip_9L990

21 - VOLT 98503 [ELLSR 240.00] : B25_3pfault_Thickwood_trip_9L990

22 - VOLT 1288 [LIVOCK01 240.00] : B25_3pfault_Thickwood_trip_9L990

Relative Machine Angle

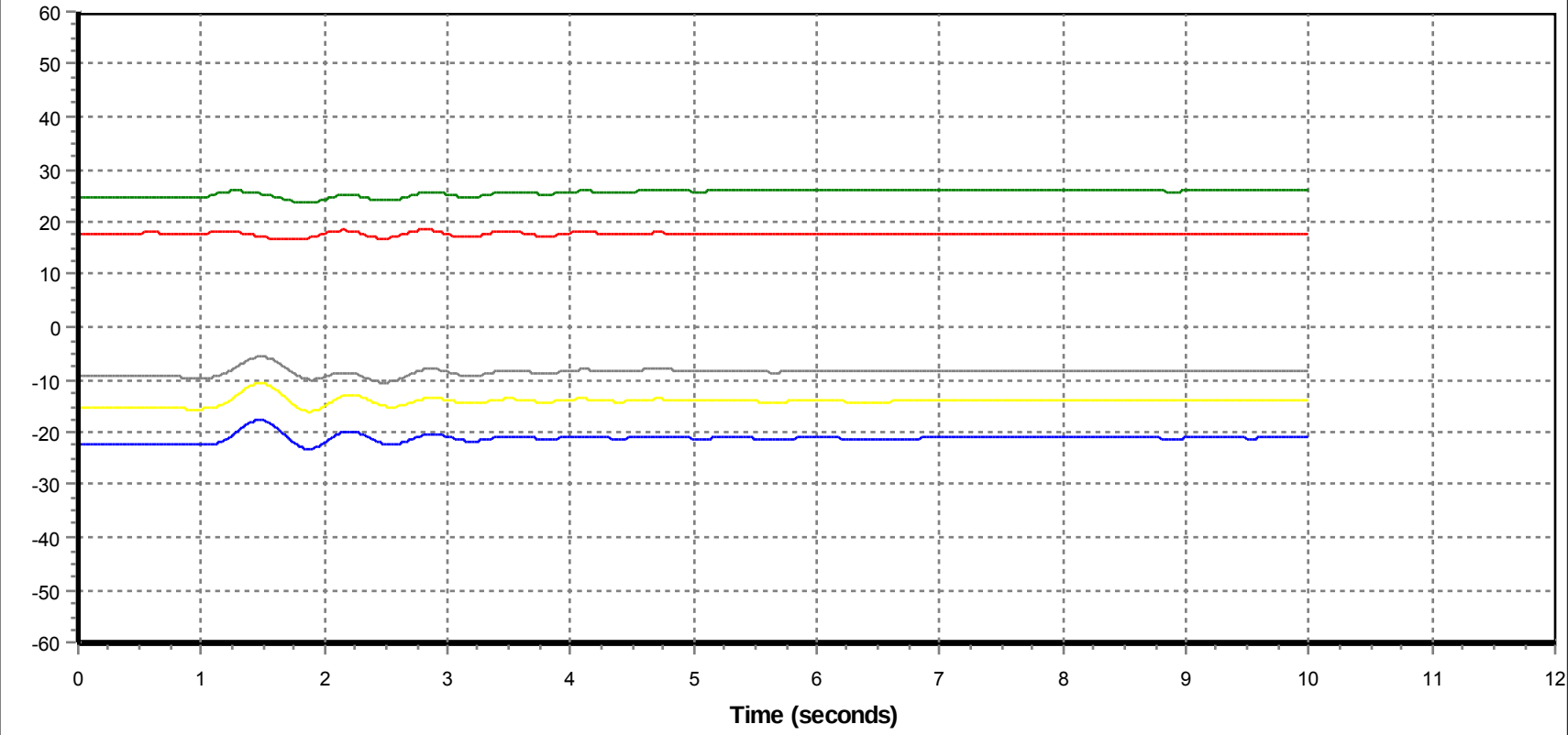

1 - ANGL 424[KEEP#2GN 19.000]2 : B26_3pfault_McMillan_trip_9L990

2 - ANGL 18274[MACKAY2 18.000]1 : B26_3pfault_McMillan_trip_9L990

3 - ANGL 3745[DOVERN 13.800]G1 : B26_3pfault_McMillan_trip_9L990

4 - ANGL 19669[MRCP 13.800]1 : B26_3pfault_McMillan_trip_9L990

5 - ANGL 10236[MUSKEG4 13.800]1 : B26_3pfault_McMillan_trip_9L990

Machine Power

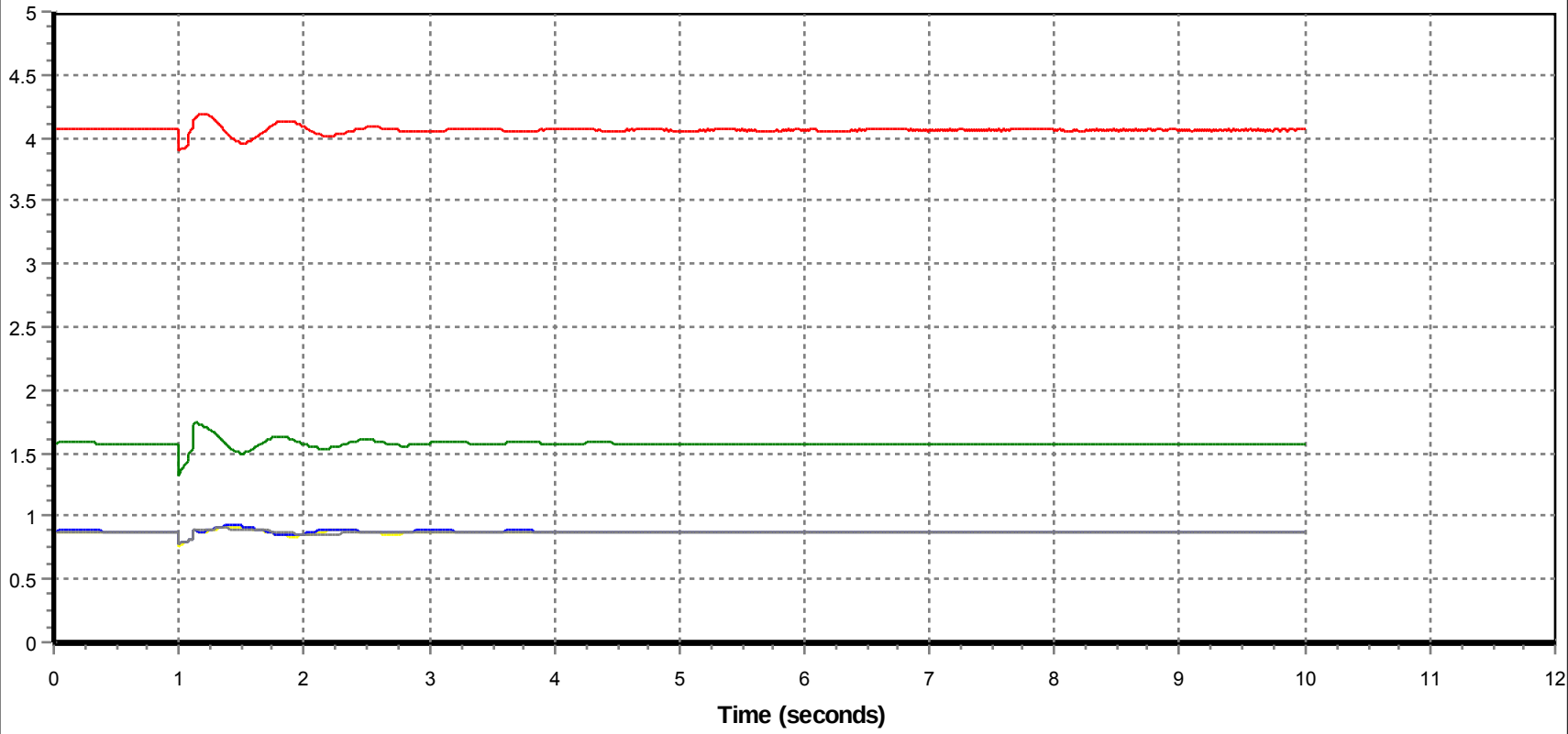

6 - POWR 424[KEEP#2GN 19.000]2 : B26_3pfault_McMillan_trip_9L990

7 - POWR 18274[MACKAY2 18.000]1 : B26_3pfault_McMillan_trip_9L990

8 - POWR 3745[DOVERN 13.800]G1 : B26_3pfault_McMillan_trip_9L990

9 - POWR 19669[MRCP 13.800]1 : B26_3pfault_McMillan_trip_9L990

10 - POWR 10236[MUSKEG4 13.800]1 : B26_3pfault_McMillan_trip_9L990

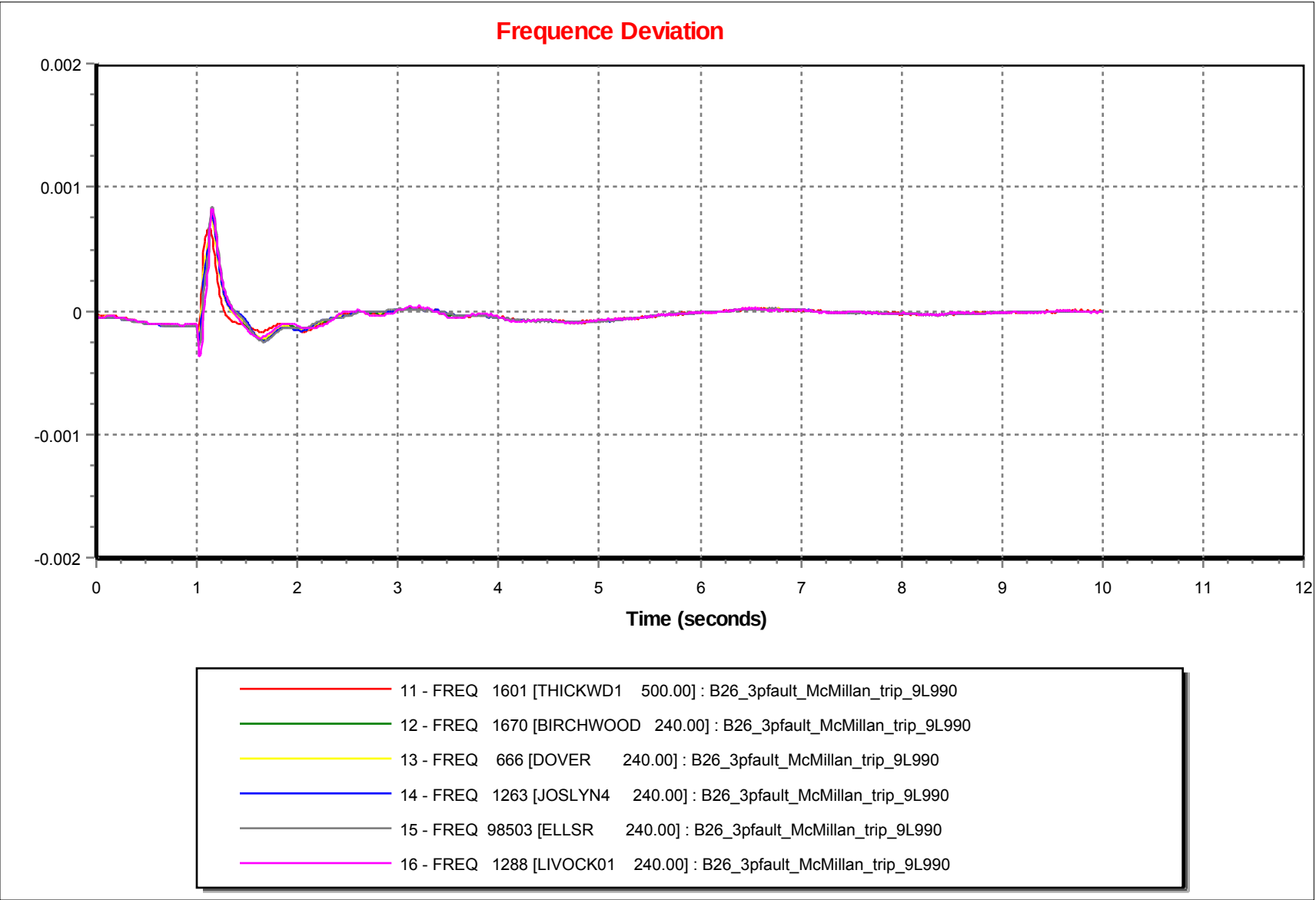
Frequence Deviation
0.002
0.001
0
-0.001
-0.002
0
1
2
3
4
5
6
7
8
9
10
11
12
Time (seconds)
11 - FREQ 1601 [THICKWD1 500.00] : B26_3pfault_McMillan_trip_9L990
12 - FREQ 1670 [BIRCHWOOD 240.00] : B26_3pfault_McMillan_trip_9L990
13 - FREQ 666 [DOVER 240.00] : B26_3pfault_McMillan_trip_9L990
14 - FREQ 1263 [JOSLYN4 240.00] : B26_3pfault_McMillan_trip_9L990
15 - FREQ 98503 [ELLSR 240.00] : B26_3pfault_McMillan_trip_9L990
16 - FREQ 1288 [LIVOCK01 240.00] : B26_3pfault_McMillan_trip_9L990

Voltage

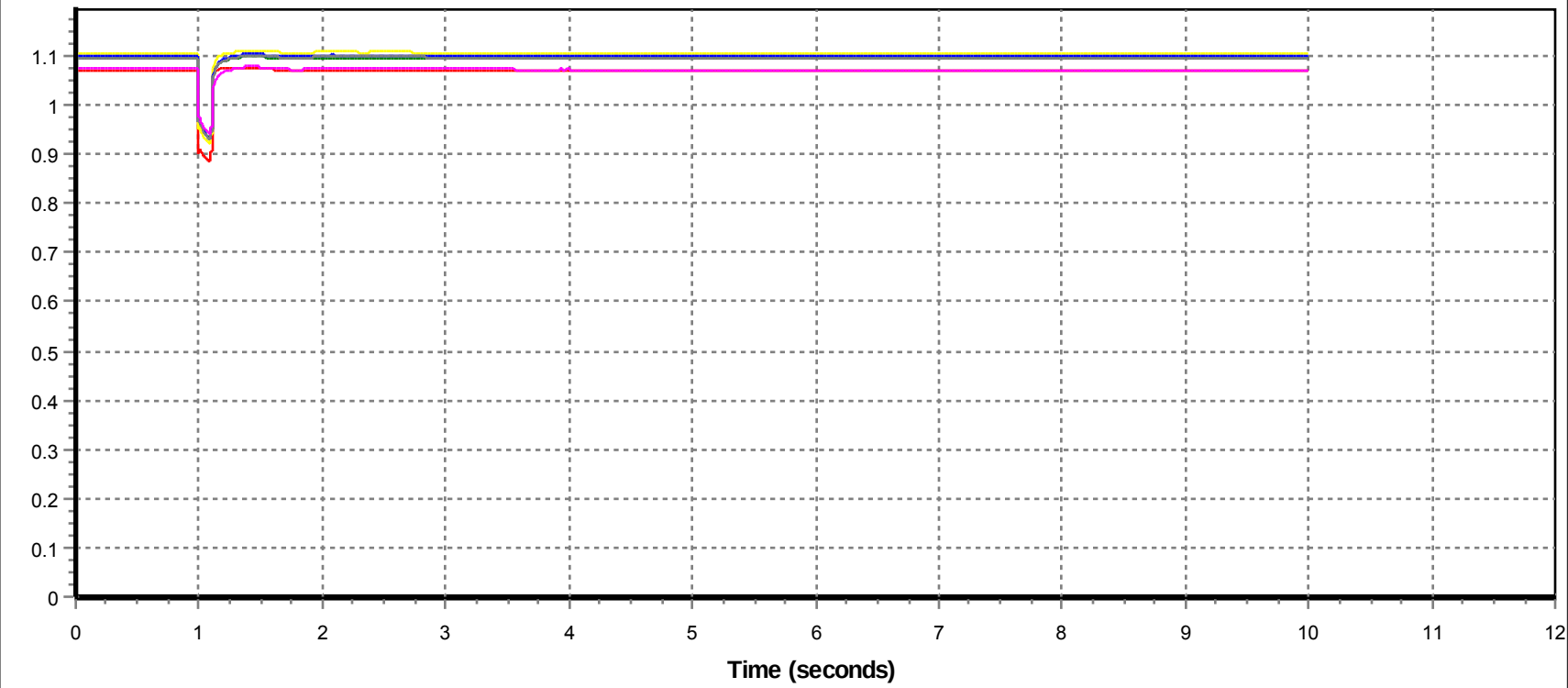

17 - VOLT 1601 [THICKWD1 500.00] : B26_3pfault_McMillan_trip_9L990

18 - VOLT 1670 [BIRCHWOOD 240.00] : B26_3pfault_McMillan_trip_9L990

19 - VOLT 666 [DOVER 240.00] : B26_3pfault_McMillan_trip_9L990

20 - VOLT 1263 [JOSLYN4 240.00] : B26_3pfault_McMillan_trip_9L990

21 - VOLT 98503 [ELLSR 240.00] : B26_3pfault_McMillan_trip_9L990

22 - VOLT 1288 [LIVOCK01 240.00] : B26_3pfault_McMillan_trip_9L990

Relative Machine Angle

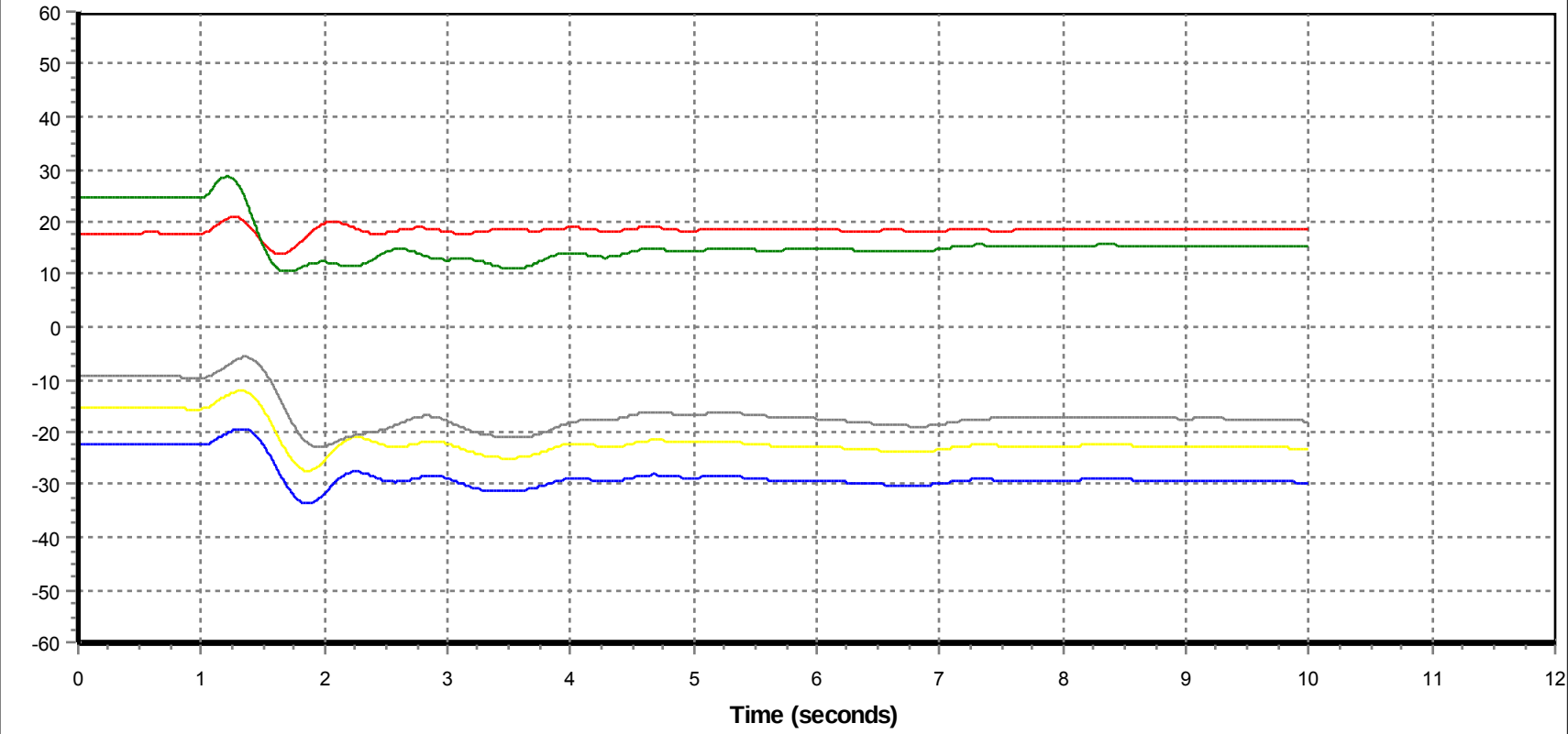

1 - ANGL 424[KEEP#2GN 19.000]2 : B27_3pfault_Thickwood_trip_1044L

2 - ANGL 18274[MACKAY2 18.000]1 : B27_3pfault_Thickwood_trip_1044L

3 - ANGL 3745[DOVERN 13.800]G1 : B27_3pfault_Thickwood_trip_1044L

4 - ANGL 19669[MRCP 13.800]1 : B27_3pfault_Thickwood_trip_1044L

5 - ANGL 10236[MUSKEG4 13.800]1 : B27_3pfault_Thickwood_trip_1044L

Machine Power

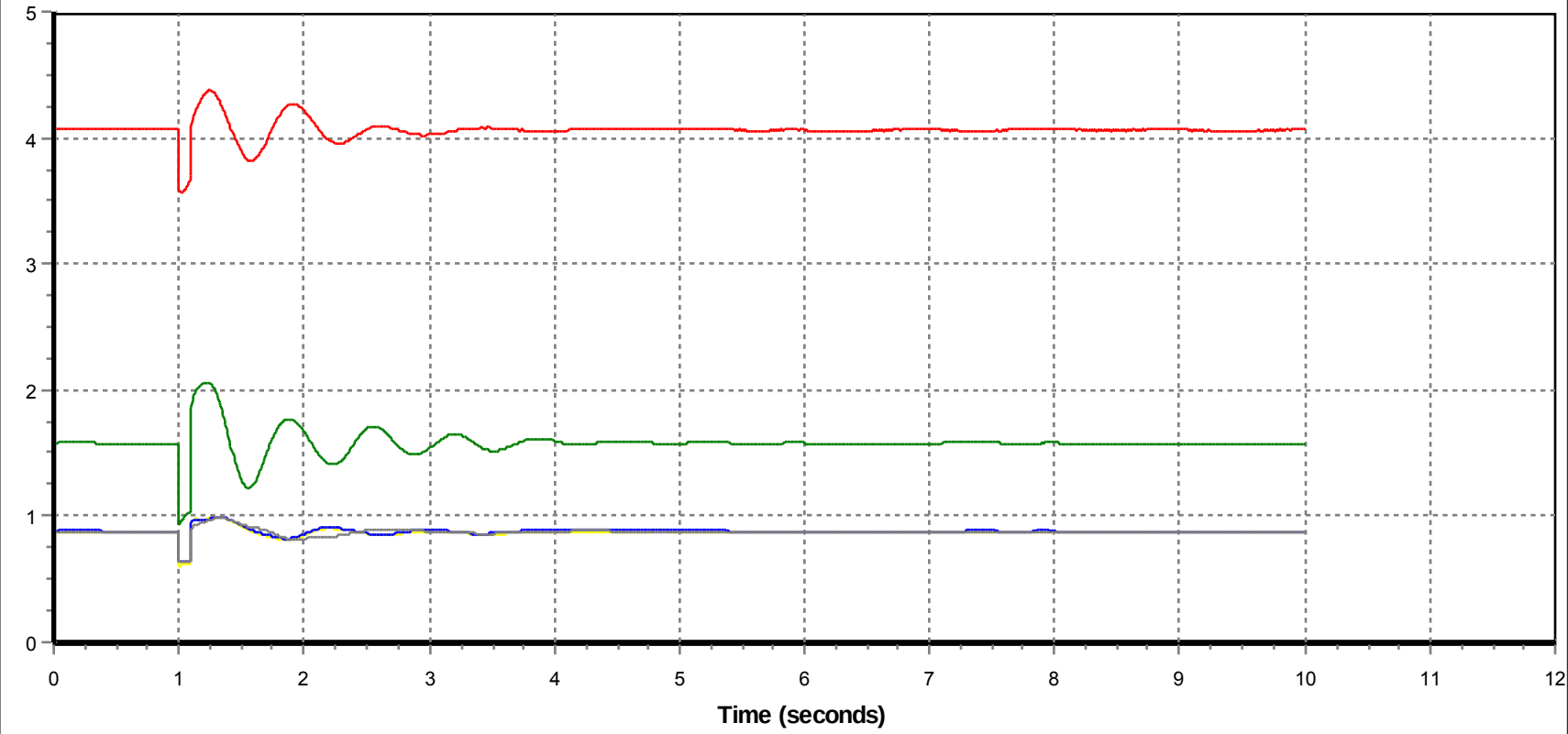

6 - POWR 424[KEEP#2GN 19.000]2 : B27_3pfault_Thickwood_trip_1044L

7 - POWR 18274[MACKAY2 18.000]1 : B27_3pfault_Thickwood_trip_1044L

8 - POWR 3745[DOVERN 13.800]G1 : B27_3pfault_Thickwood_trip_1044L

9 - POWR 19669[MRCP 13.800]1 : B27_3pfault_Thickwood_trip_1044L

10 - POWR 10236[MUSKEG4 13.800]1 : B27_3pfault_Thickwood_trip_1044L

Frequence Deviation

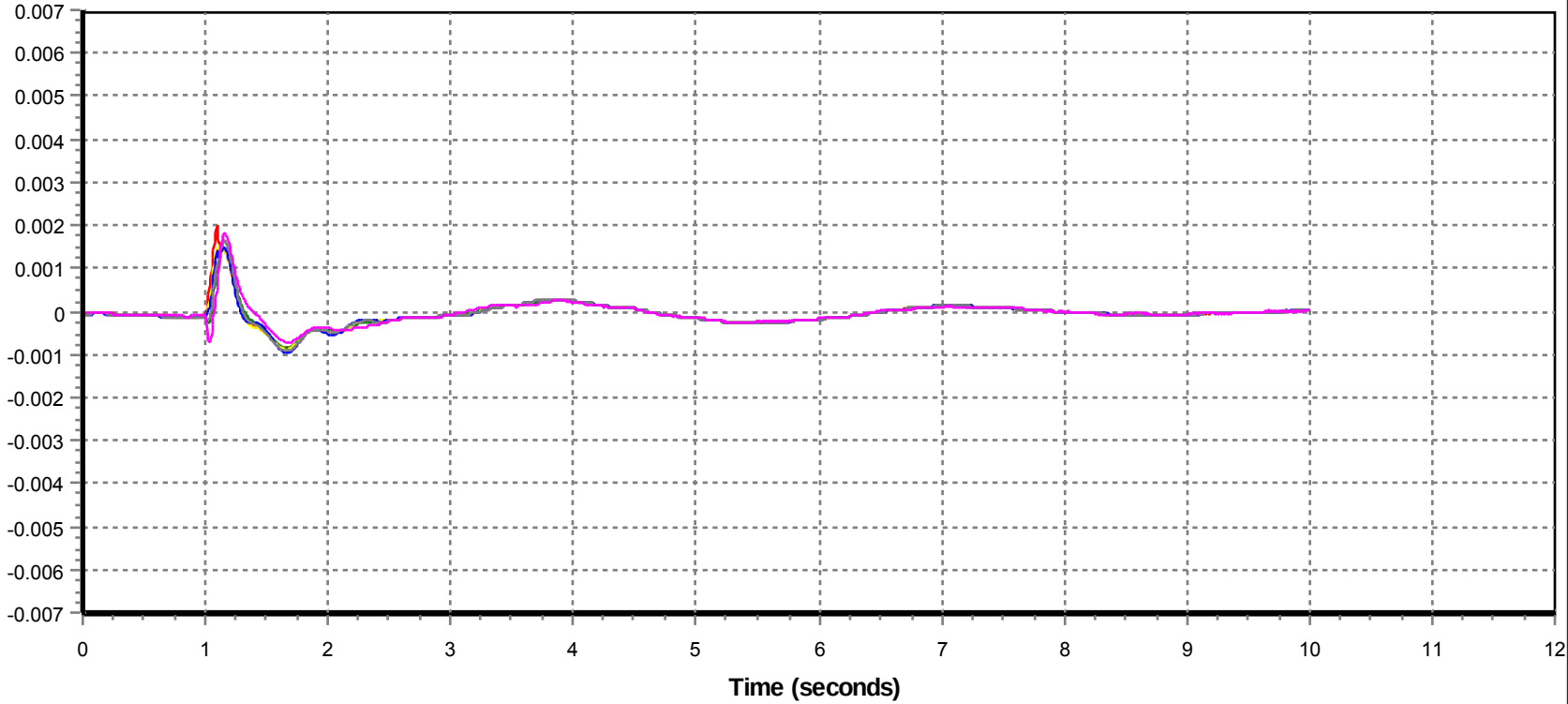

11 - FREQ 1601 [THICKWD1 500.00] : B27_3pfault_Thickwood_trip_1044L

12 - FREQ 1670 [BIRCHWOOD 240.00] : B27_3pfault_Thickwood_trip_1044L

13 - FREQ 666 [DOVER 240.00] : B27_3pfault_Thickwood_trip_1044L

14 - FREQ 1263 [JOSLYN4 240.00] : B27_3pfault_Thickwood_trip_1044L

15 - FREQ 98503 [ELLSR 240.00] : B27_3pfault_Thickwood_trip_1044L

16 - FREQ 1288 [LIVOCK01 240.00] : B27_3pfault_Thickwood_trip_1044L

Voltage

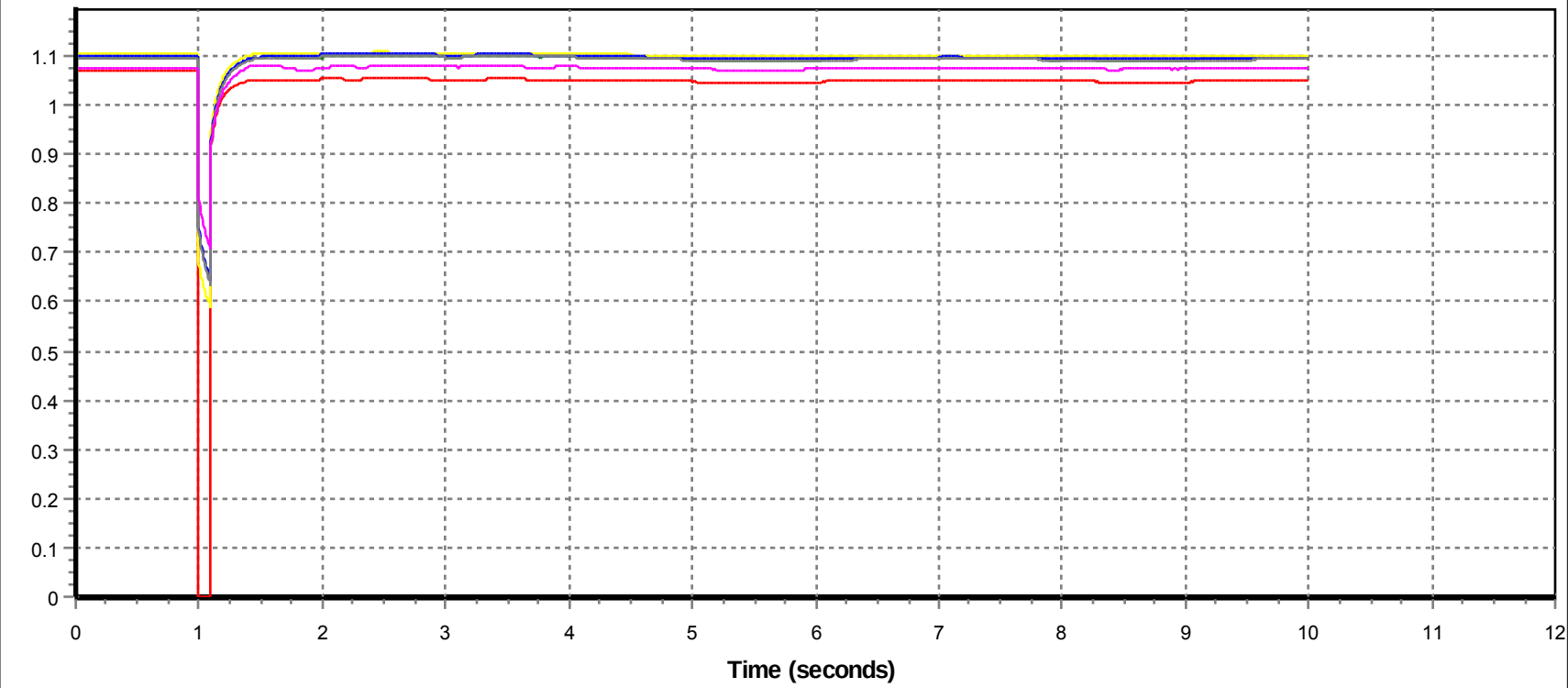

17 - VOLT 1601 [THICKWD1 500.00] : B27_3pfault_Thickwood_trip_1044L

18 - VOLT 1670 [BIRCHWOOD 240.00] : B27_3pfault_Thickwood_trip_1044L

19 - VOLT 666 [DOVER 240.00] : B27_3pfault_Thickwood_trip_1044L

20 - VOLT 1263 [JOSLYN4 240.00] : B27_3pfault_Thickwood_trip_1044L

21 - VOLT 98503 [ELLSR 240.00] : B27_3pfault_Thickwood_trip_1044L

22 - VOLT 1288 [LIVOCK01 240.00] : B27_3pfault_Thickwood_trip_1044L

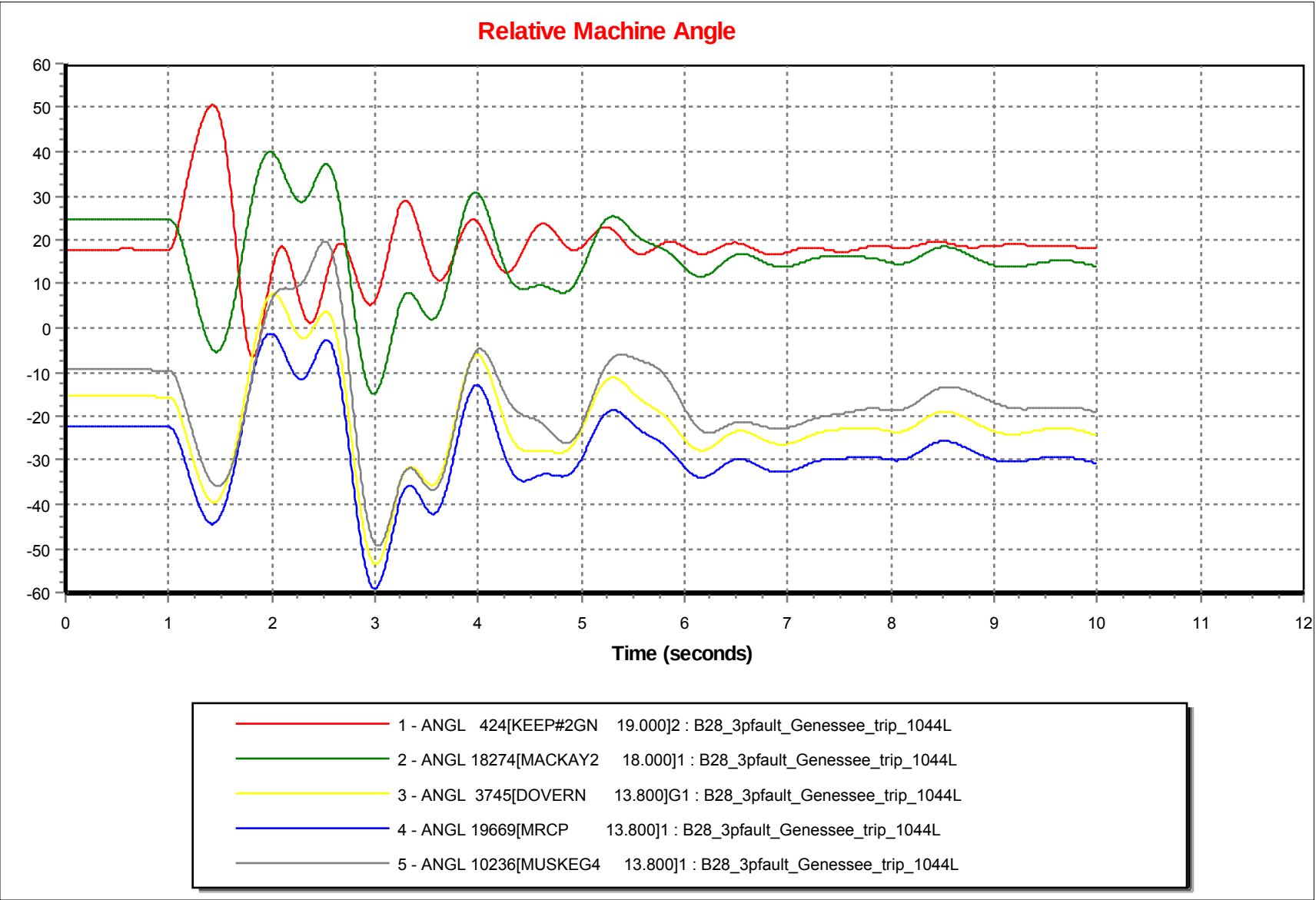
Relative Machine Angle
60
50
40
30
20
10
0
-10
-20
-30
-40
-50
-60
0
1
2
3
4
5
6
7
8
9
10
11
12
Time (seconds)
1 - ANGL 424[KEEP#2GN 19.000]2 : B28_3pfault_Genessee_trip_1044L
2 - ANGL 18274[MACKAY2 18.000]1 : B28_3pfault_Genessee_trip_1044L
3 - ANGL 3745[DOVERN 13.800]G1 : B28_3pfault_Genessee_trip_1044L
4 - ANGL 19669[MRCP 13.800]1 : B28_3pfault_Genessee_trip_1044L
5 - ANGL 10236[MUSKEG4 13.800]1 : B28_3pfault_Genessee_trip_1044L

Machine Power

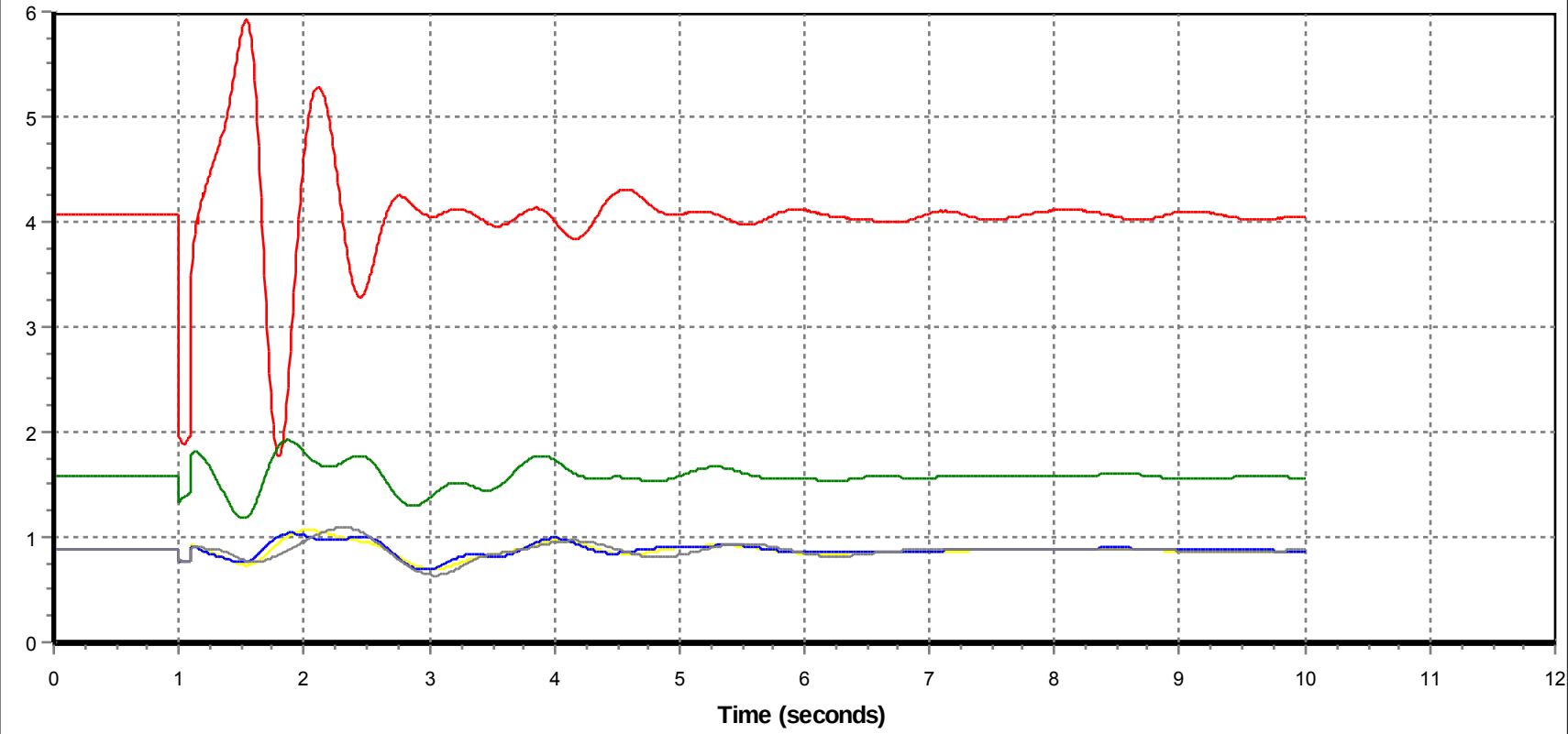

6 - POWR 424[KEEP#2GN 19.000]2 : B28_3pfault_Genessee_trip_1044L

7 - POWR 18274[MACKAY2 18.000]1 : B28_3pfault_Genessee_trip_1044L

8 - POWR 3745[DOVERN 13.800]G1 : B28_3pfault_Genessee_trip_1044L

9 - POWR 19669[MRCP 13.800]1 : B28_3pfault_Genessee_trip_1044L

10 - POWR 10236[MUSKEG4 13.800]1 : B28_3pfault_Genessee_trip_1044L

Frequence Deviation

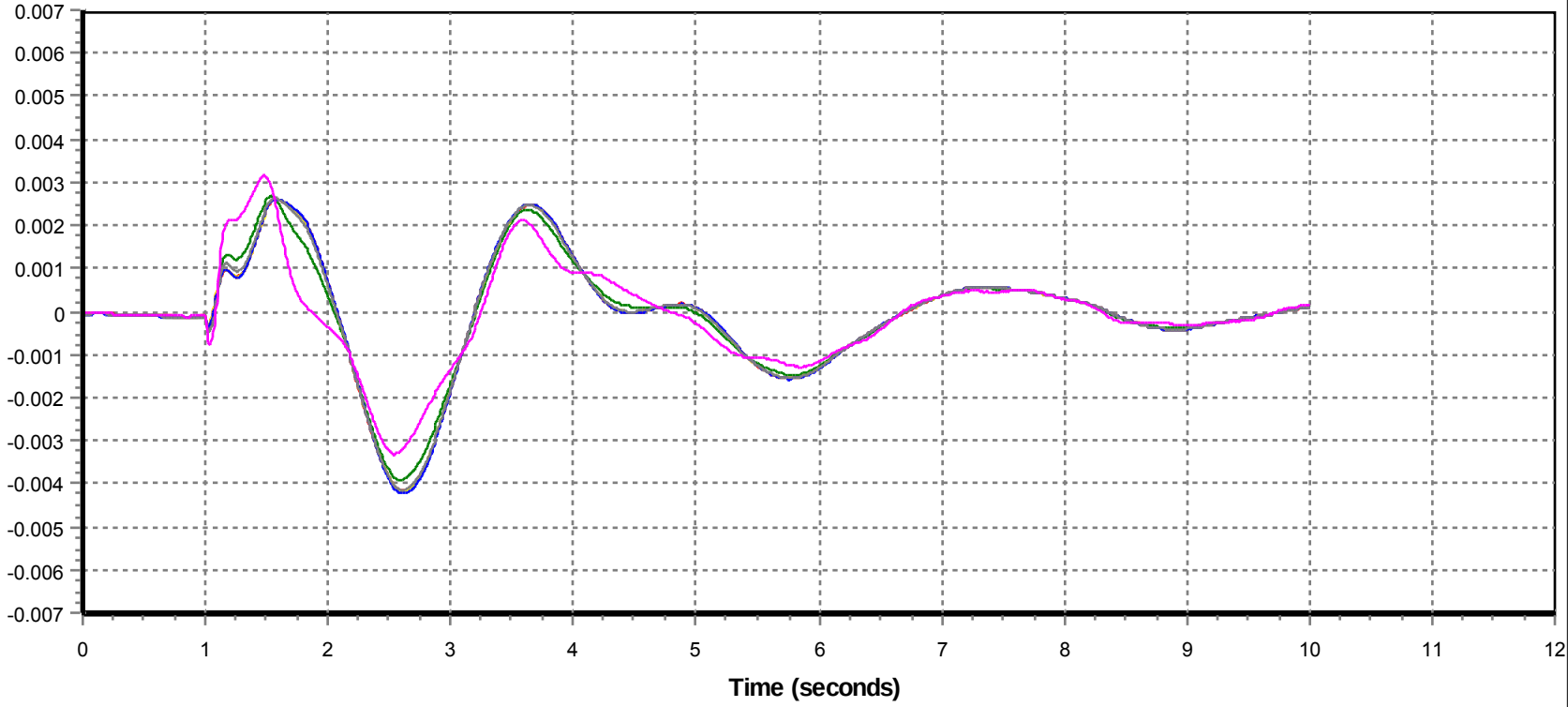

11 - FREQ 1601 [THICKWD1 500.00] : B28_3pfault_Genessee_trip_1044L

12 - FREQ 1670 [BIRCHWOOD 240.00] : B28_3pfault_Genessee_trip_1044L

13 - FREQ 666 [DOVER 240.00] : B28_3pfault_Genessee_trip_1044L

14 - FREQ 1263 [JOSLYN4 240.00] : B28_3pfault_Genessee_trip_1044L

15 - FREQ 98503 [ELLSR 240.00] : B28_3pfault_Genessee_trip_1044L

16 - FREQ 1288 [LIVOCK01 240.00] : B28_3pfault_Genessee_trip_1044L

Voltage

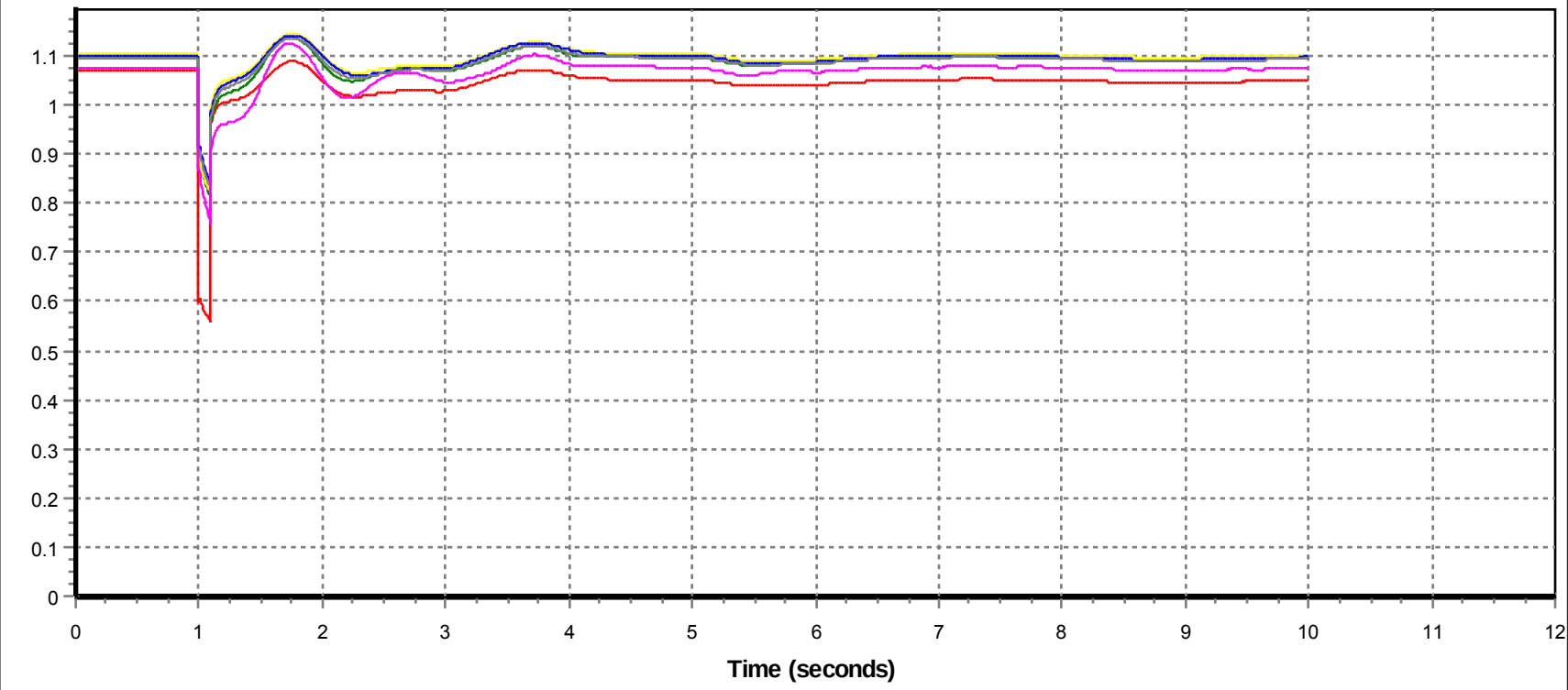

17 - VOLT 1601 [THICKWD1 500.00] : B28_3pfault_Genessee_trip_1044L

18 - VOLT 1670 [BIRCHWOOD 240.00] : B28_3pfault_Genessee_trip_1044L

19 - VOLT 666 [DOVER 240.00] : B28_3pfault_Genessee_trip_1044L

20 - VOLT 1263 [JOSLYN4 240.00] : B28_3pfault_Genessee_trip_1044L

21 - VOLT 98503 [ELLSR 240.00] : B28_3pfault_Genessee_trip_1044L

22 - VOLT 1288 [LIVOCK01 240.00] : B28_3pfault_Genessee_trip_1044L

Category C3 Fault Analysis Results

Category C3 fault analysis was performed for 2020 winter peak case with NW FMM development. Category C3 faults are defined as a three phase fault with normal clearing time and manual system adjustment, followed by another three phase fault with normal clearing time. 500 kV line from Thichwood to Genesee is assumed to be the first outage followed by another contingency because it is most critical transmission line to FMM area. Table J-2 summarizes the fault descriptions and results for the Category C3 fault analysis. Specific transient simulation plots for Category C3 contingencies can be found in this Appendix J. The first contingency response have are same as Category B events, which have been simulated. Therefore simulation plots for Category C3 only show the second contingency system response.

TABLE J-2

STABILITY RESULTS FOR CATEGORY C3 FAULTS

Case ID	Description	Observations
C301	500 kV line from Thichwood to Genesee outage and system adjustment 5 cycles: trip Birchwood CB on 9L57 to Livock 939S 7 cycles: trip Livock CB on 9L57	System stable Good voltage recovery
C302	500 kV line from Thichwood to Genesee outage and system adjustment 5 cycles: trip Birchwood CB on 9L95 to Ells River 2079S 7 cycles: trip Ells River CB on 9L95	System stable Good voltage recovery
C303	500 kV line from Thichwood to Genesee outage and system adjustment 5 cycles: trip Dover CB on 9L74 to Birchwood 960S 7 cycles: trip Birchwood CB on 9L74	System stable Good voltage recovery
C304	500 kV line from Thichwood to Genesee outage and system adjustment 5 cycles: trip Ells River 2079S CB on 9L08 to Dover 888S 7 cycles: trip Dover CB on 9L08	System stable Good voltage recovery
C305	500 kV line from Thichwood to Genesee outage and system adjustment 5 cycles: trip Ells River CB on 9L76 to Joslyn 849S 7 cycles: trip Joslyn CB on 9L76	System stable Good voltage recovery

Relative Machine Angle

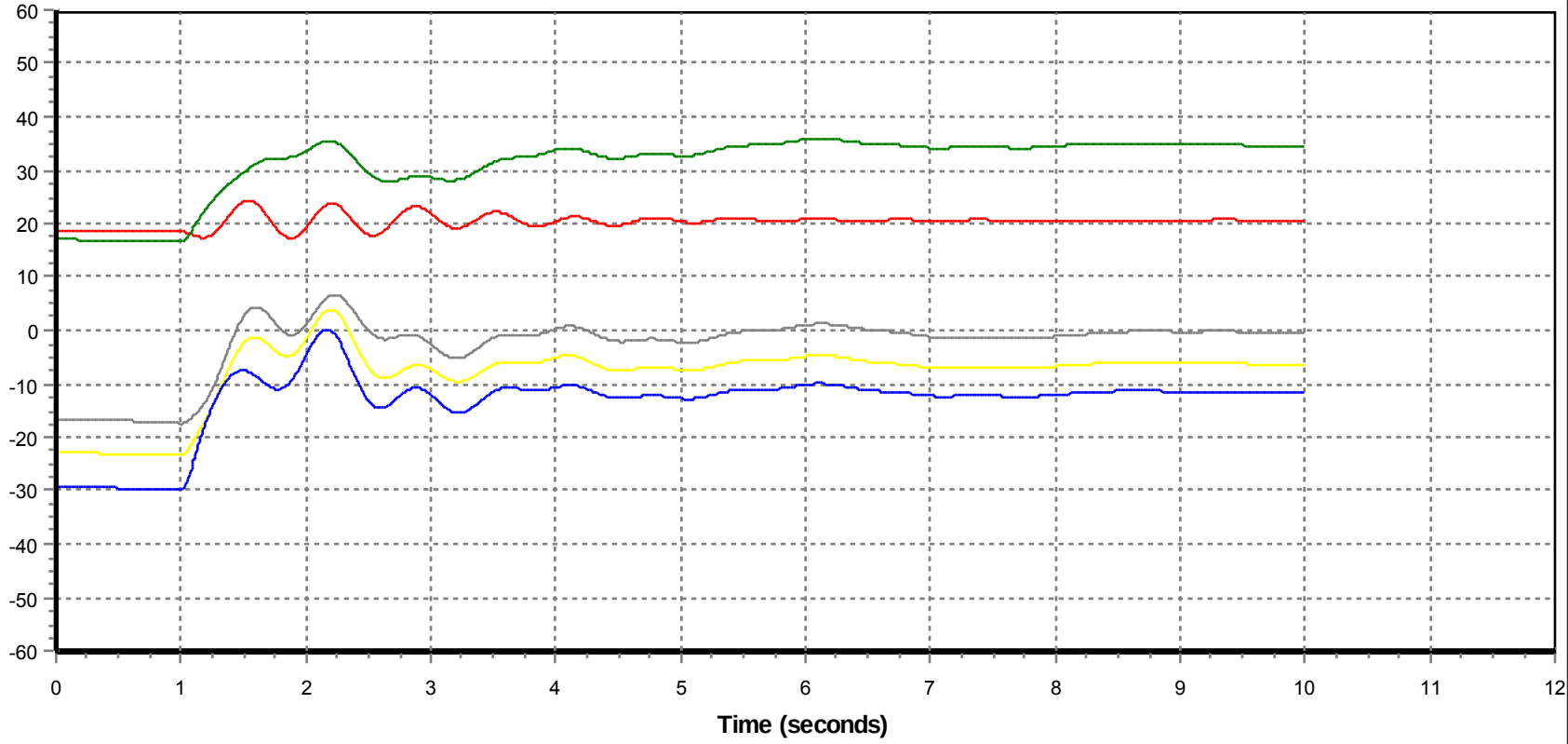

1 - ANGL 424[KEEP#2GN 19.000]2 : C301_3pfault_Birchwood_trip_9L57

2 - ANGL 18274[MACKAY2 18.000]1 : C301_3pfault_Birchwood_trip_9L57

3 - ANGL 3745[DOVERN 13.800]G1 : C301_3pfault_Birchwood_trip_9L57

4 - ANGL 19669[MRCP 13.800]1 : C301_3pfault_Birchwood_trip_9L57

5 - ANGL 10236[MUSKEG4 13.800]1 : C301_3pfault_Birchwood_trip_9L57

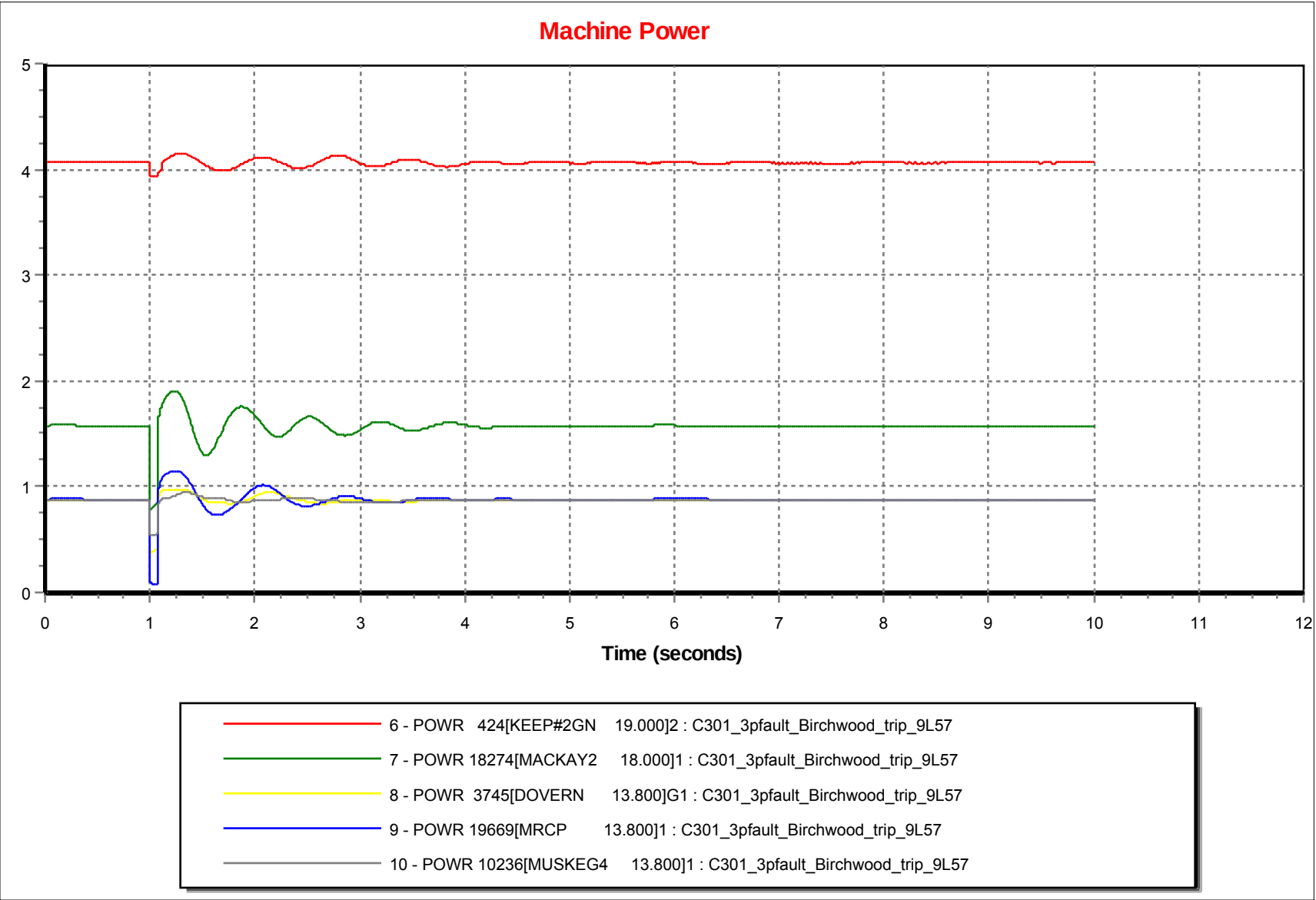
Machine Power
5
4
3
2
1
0
0
1
2
3
4
5
6
7
8
9
10
11
12
Time (seconds)
6 - POWR 424[KEEP#2GN 19.000]2 : C301_3pfault_Birchwood_trip_9L57
7 - POWR 18274[MACKAY2 18.000]1 : C301_3pfault_Birchwood_trip_9L57
8 - POWR 3745[DOVERN 13.800]G1 : C301_3pfault_Birchwood_trip_9L57
9 - POWR 19669[MRCP 13.800]1 : C301_3pfault_Birchwood_trip_9L57
10 - POWR 10236[MUSKEG4 13.800]1 : C301_3pfault_Birchwood_trip_9L57

Frequence Deviation

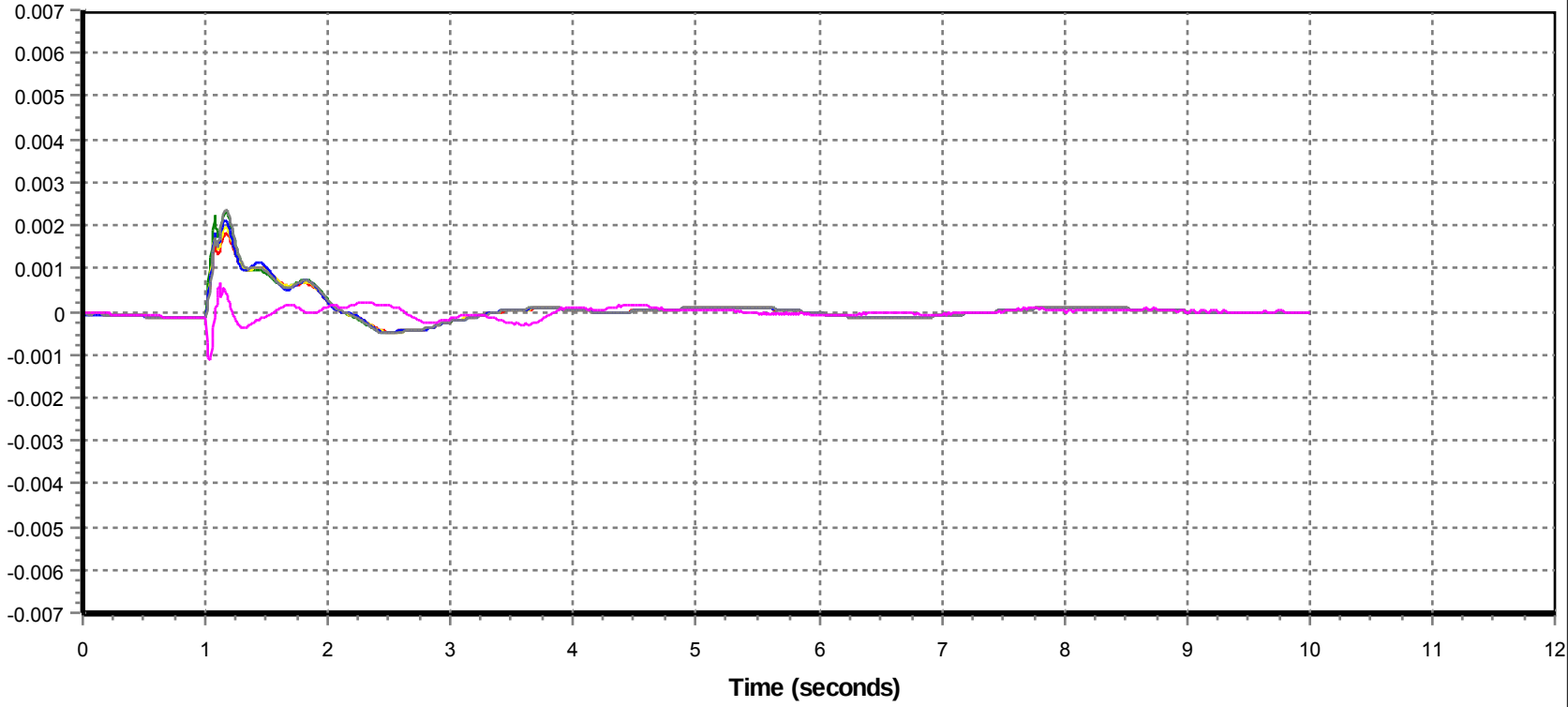

11 - FREQ 1601 [THICKWD1 500.00] : C301_3pfault_Birchwood_trip_9L57

12 - FREQ 1670 [BIRCHWOOD 240.00] : C301_3pfault_Birchwood_trip_9L57

13 - FREQ 666 [DOVER 240.00] : C301_3pfault_Birchwood_trip_9L57

14 - FREQ 1263 [JOSLYN4 240.00] : C301_3pfault_Birchwood_trip_9L57

15 - FREQ 98503 [ELLSR 240.00] : C301_3pfault_Birchwood_trip_9L57

16 - FREQ 1288 [LIVOCK01 240.00] : C301_3pfault_Birchwood_trip_9L57

Voltage

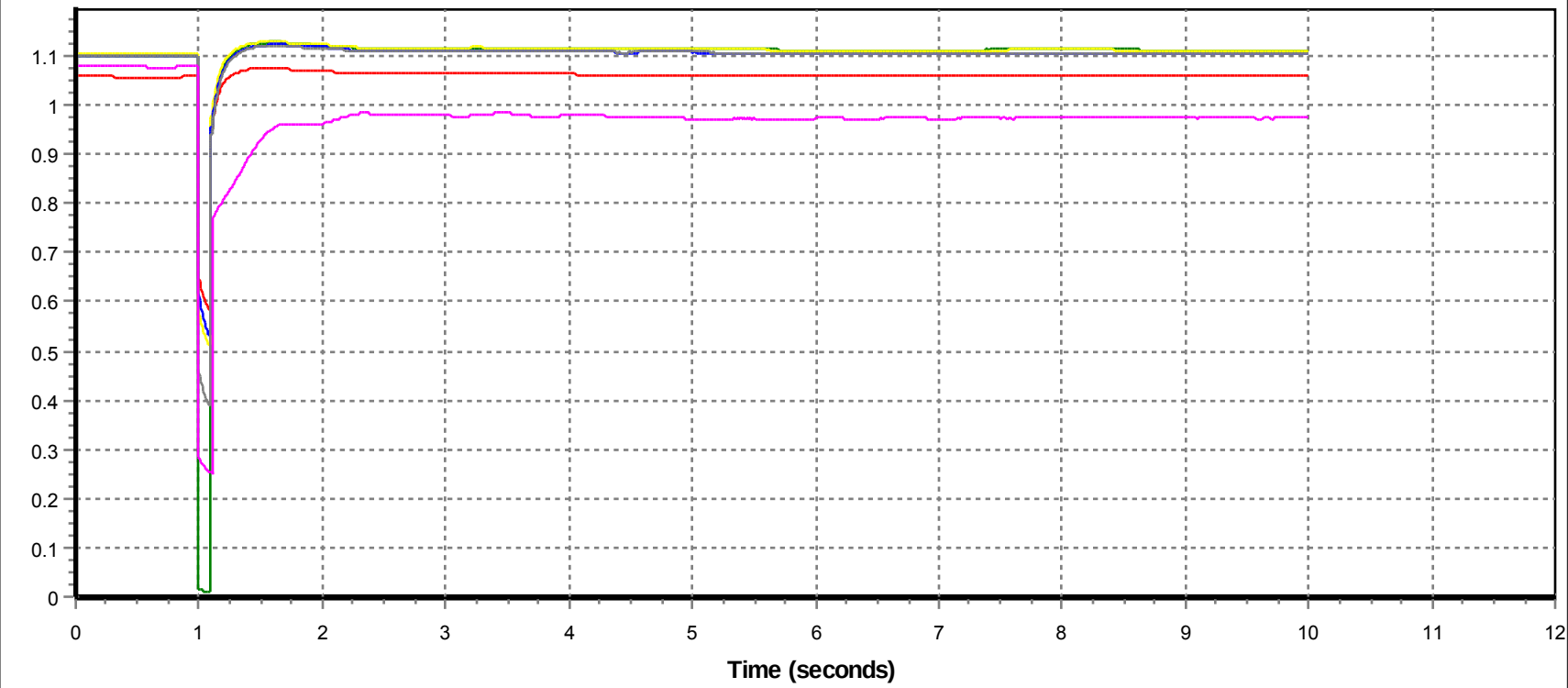

17 - VOLT 1601 [THICKWD1 500.00] : C301_3pfault_Birchwood_trip_9L57

18 - VOLT 1670 [BIRCHWOOD 240.00] : C301_3pfault_Birchwood_trip_9L57

19 - VOLT 666 [DOVER 240.00] : C301_3pfault_Birchwood_trip_9L57

20 - VOLT 1263 [JOSLYN4 240.00] : C301_3pfault_Birchwood_trip_9L57

21 - VOLT 98503 [ELLSR 240.00] : C301_3pfault_Birchwood_trip_9L57

22 - VOLT 1288 [LIVOCK01 240.00] : C301_3pfault_Birchwood_trip_9L57

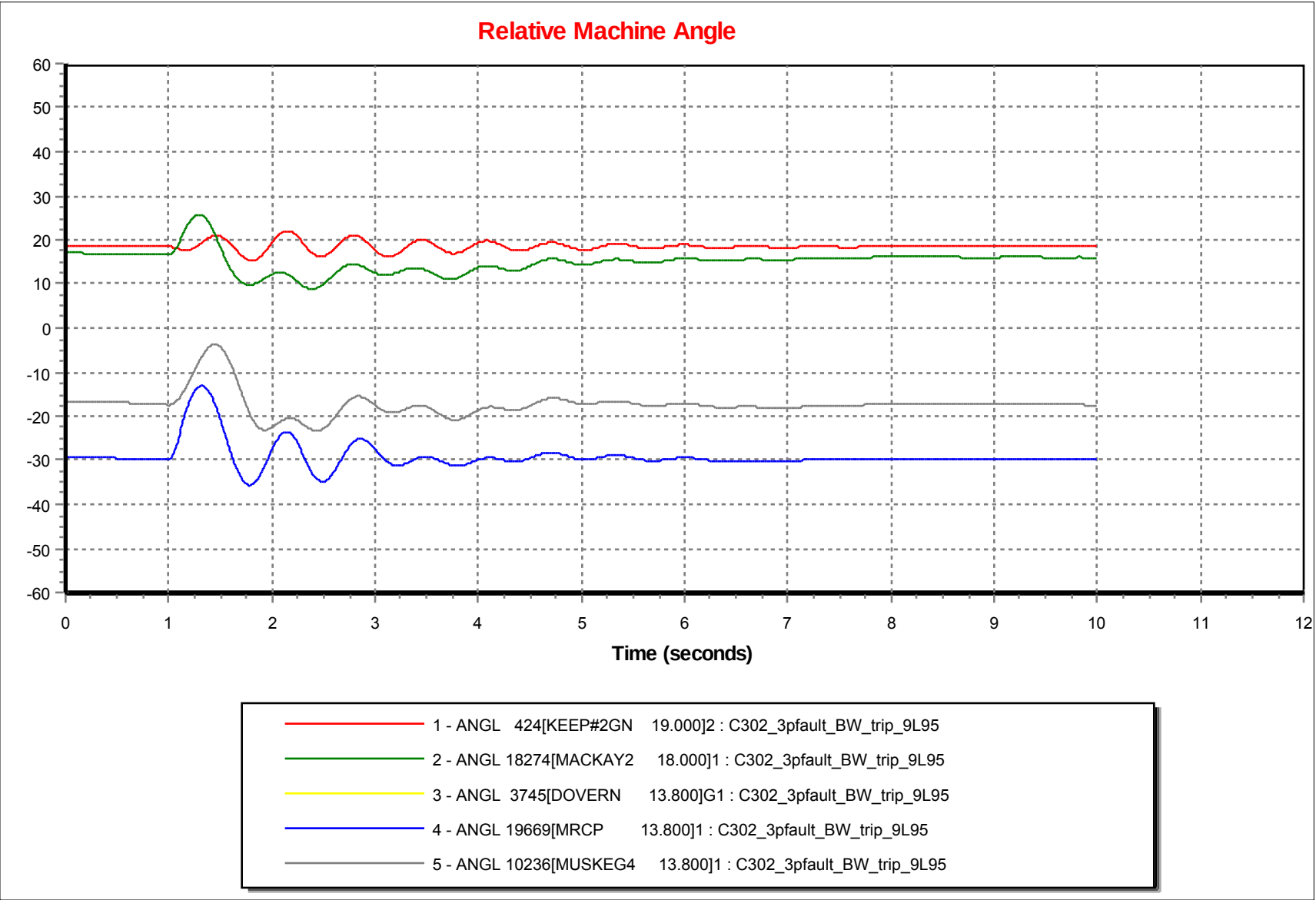
Relative Machine Angle
60
50
40
30
20
10
0
-10
-20
-30
-40
-50
-60
0
1
2
3
4
5
6
7
8
9
10
11
12
Time (seconds)
1 - ANGL 424[KEEP#2GN 19.000]2 : C302_3pfault_BW_trip_9L95
2 - ANGL 18274[MACKAY2 18.000]1 : C302_3pfault_BW_trip_9L95
3 - ANGL 3745[DOVERN 13.800]G1 : C302_3pfault_BW_trip_9L95
4 - ANGL 19669[MRCP 13.800]1 : C302_3pfault_BW_trip_9L95
5 - ANGL 10236[MUSKEG4 13.800]1 : C302_3pfault_BW_trip_9L95

Machine Power

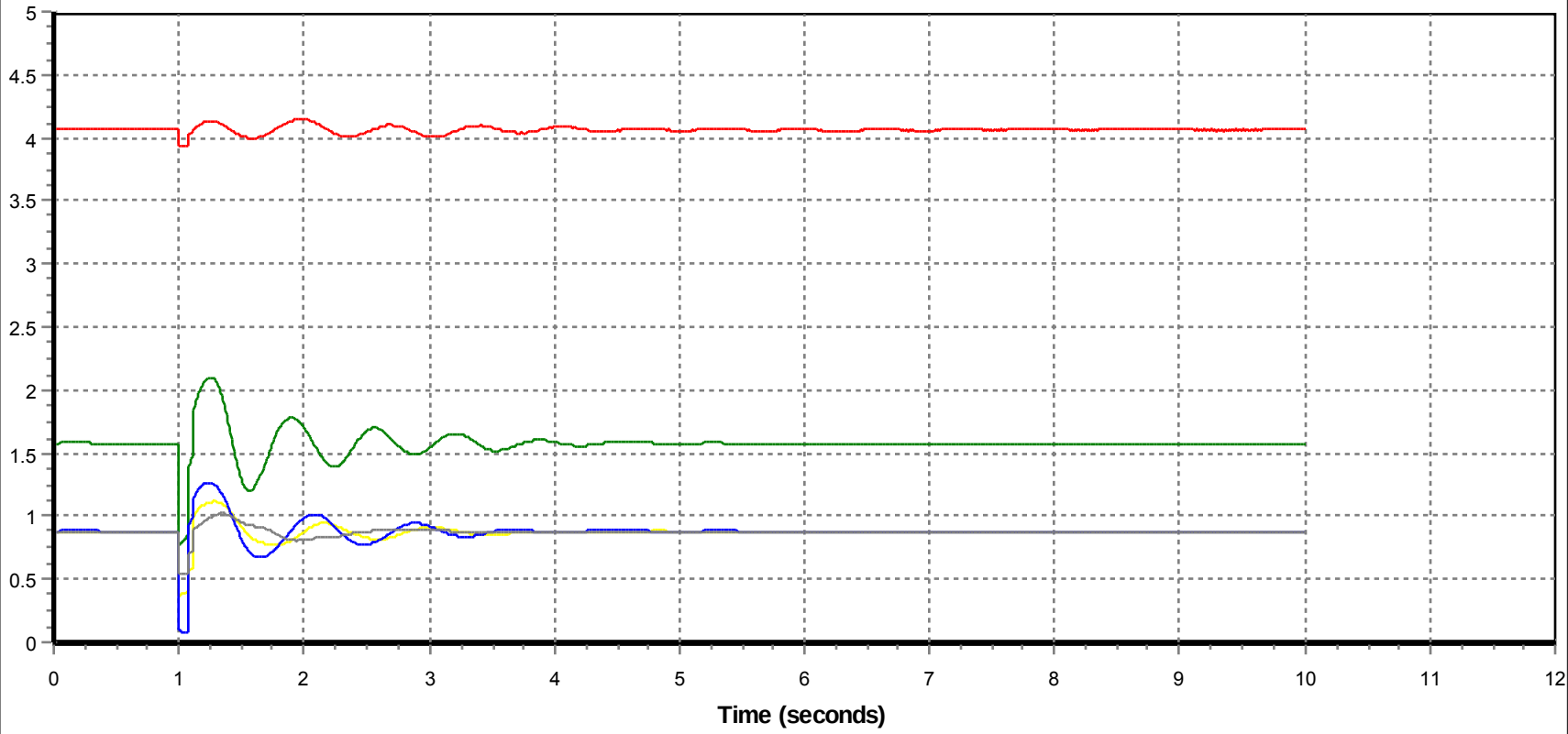

6 - POWR 424[KEEP#2GN 19.000]2 : C302_3pfault_BW_trip_9L95

7 - POWR 18274[MACKAY2 18.000]1 : C302_3pfault_BW_trip_9L95

8 - POWR 3745[DOVERN 13.800]G1 : C302_3pfault_BW_trip_9L95

9 - POWR 19669[MRCP 13.800]1 : C302_3pfault_BW_trip_9L95

10 - POWR 10236[MUSKEG4 13.800]1 : C302_3pfault_BW_trip_9L95

Frequence Deviation

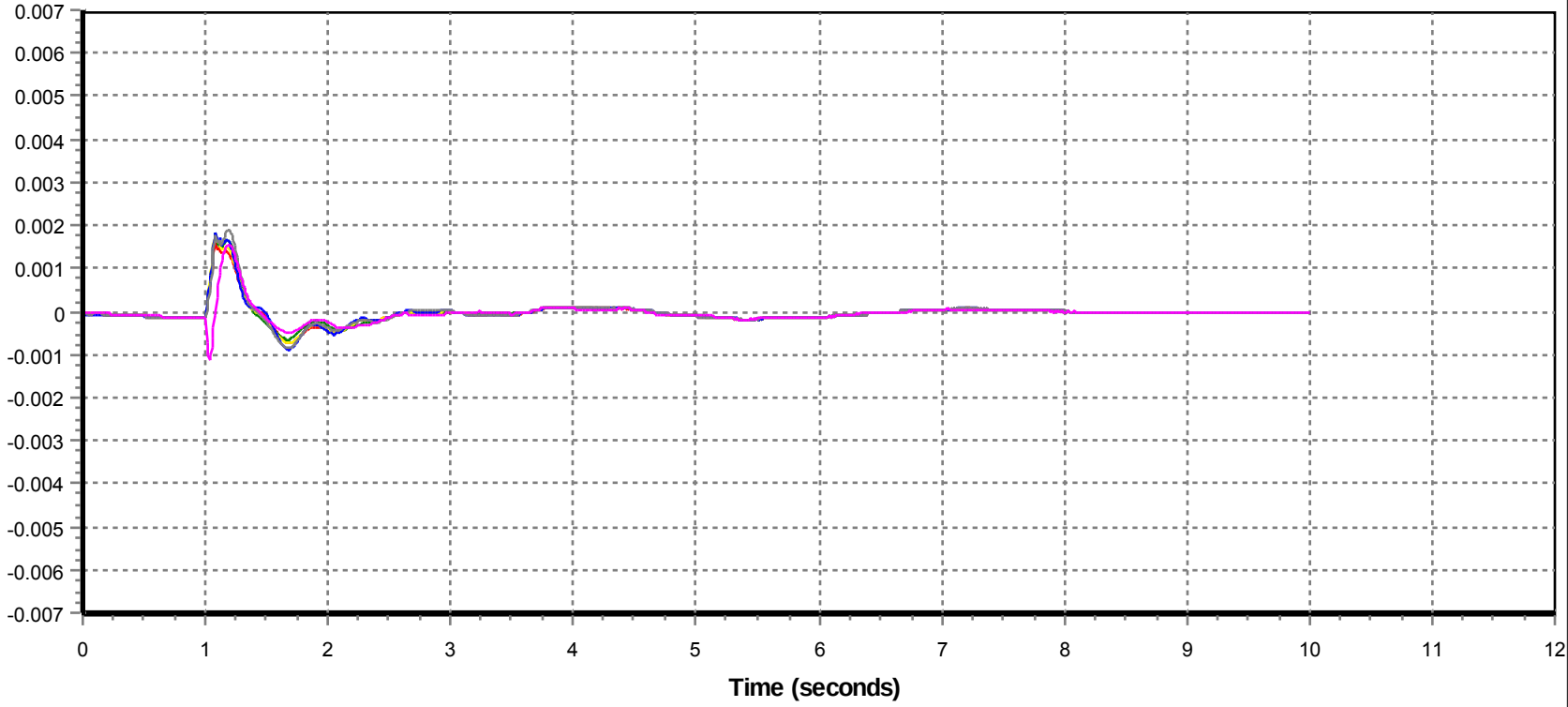

11 - FREQ 1601 [THICKWD1 500.00] : C302_3pfault_BW_trip_9L95

12 - FREQ 1670 [BIRCHWOOD 240.00] : C302_3pfault_BW_trip_9L95

13 - FREQ 666 [DOVER 240.00] : C302_3pfault_BW_trip_9L95

14 - FREQ 1263 [JOSLYN4 240.00] : C302_3pfault_BW_trip_9L95

15 - FREQ 98503 [ELLSR 240.00] : C302_3pfault_BW_trip_9L95

16 - FREQ 1288 [LIVOCK01 240.00] : C302_3pfault_BW_trip_9L95

Voltage

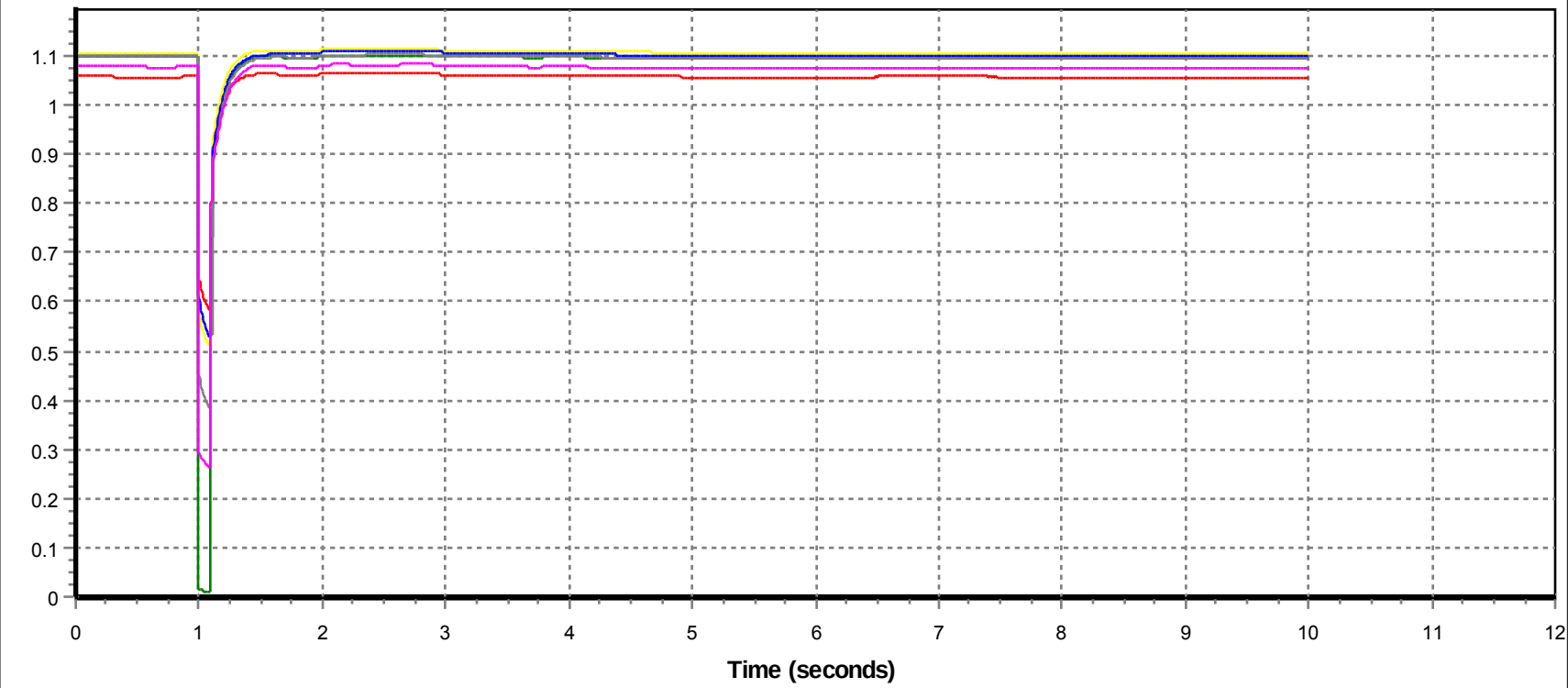

17 - VOLT 1601 [THICKWD1 500.00] : C302_3pfault_BW_trip_9L95

18 - VOLT 1670 [BIRCHWOOD 240.00] : C302_3pfault_BW_trip_9L95

19 - VOLT 666 [DOVER 240.00] : C302_3pfault_BW_trip_9L95

20 - VOLT 1263 [JOSLYN4 240.00] : C302_3pfault_BW_trip_9L95

21 - VOLT 98503 [ELLSR 240.00] : C302_3pfault_BW_trip_9L95

22 - VOLT 1288 [LIVOCK01 240.00] : C302_3pfault_BW_trip_9L95

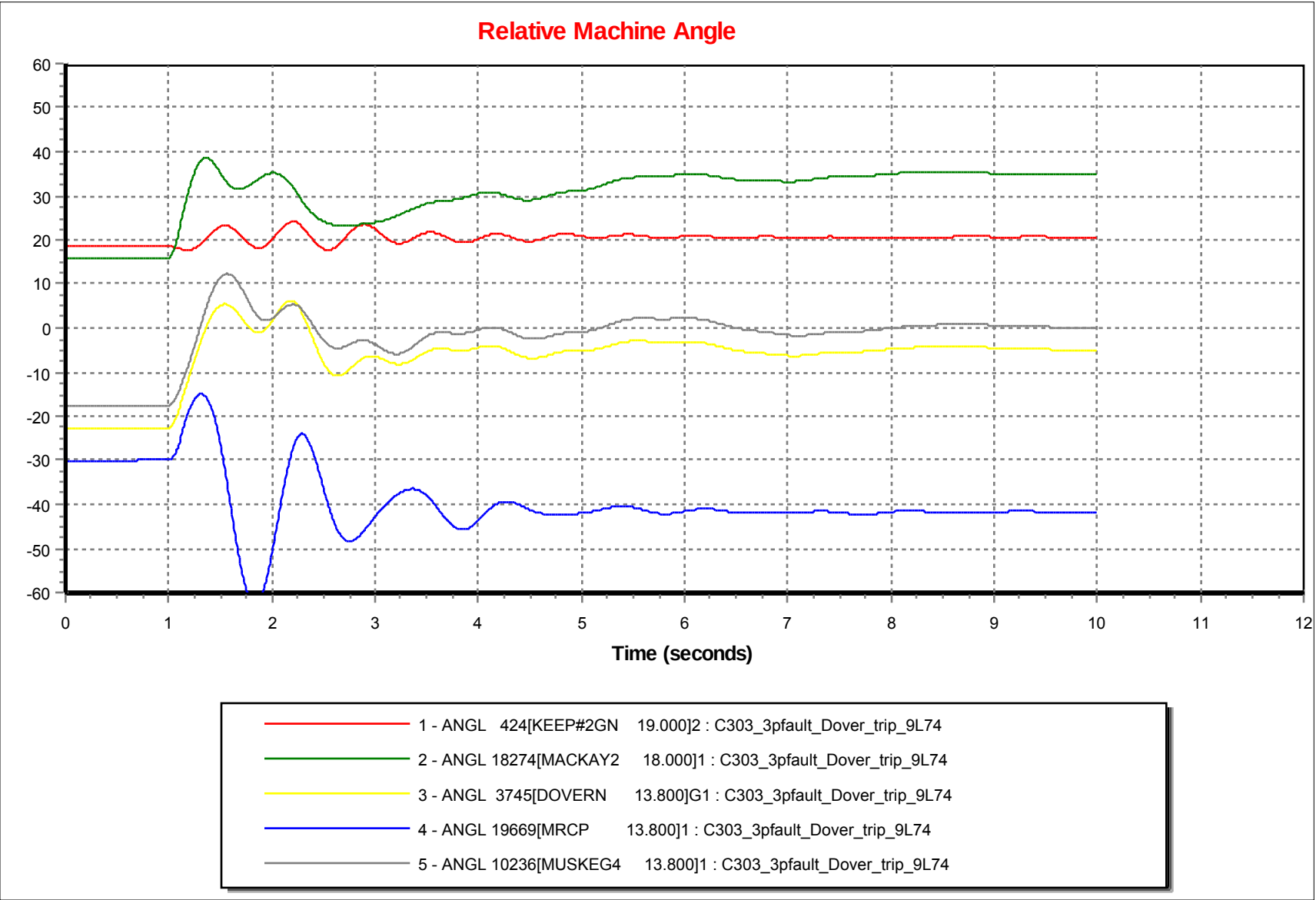
Relative Machine Angle
60
50
40
30
20
10
0
-10
-20
-30
-40
-50
-60
0
1
2
3
4
5
6
7
8
9
10
11
12
Time (seconds)
1 - ANGL 424[KEEP#2GN 19.000]2 : C303_3pfault_Dover_trip_9L74
2 - ANGL 18274[MACKAY2 18.000]1 : C303_3pfault_Dover_trip_9L74
3 - ANGL 3745[DOVERN 13.800]G1 : C303_3pfault_Dover_trip_9L74
4 - ANGL 19669[MRCP 13.800]1 : C303_3pfault_Dover_trip_9L74
5 - ANGL 10236[MUSKEG4 13.800]1 : C303_3pfault_Dover_trip_9L74

Machine Power

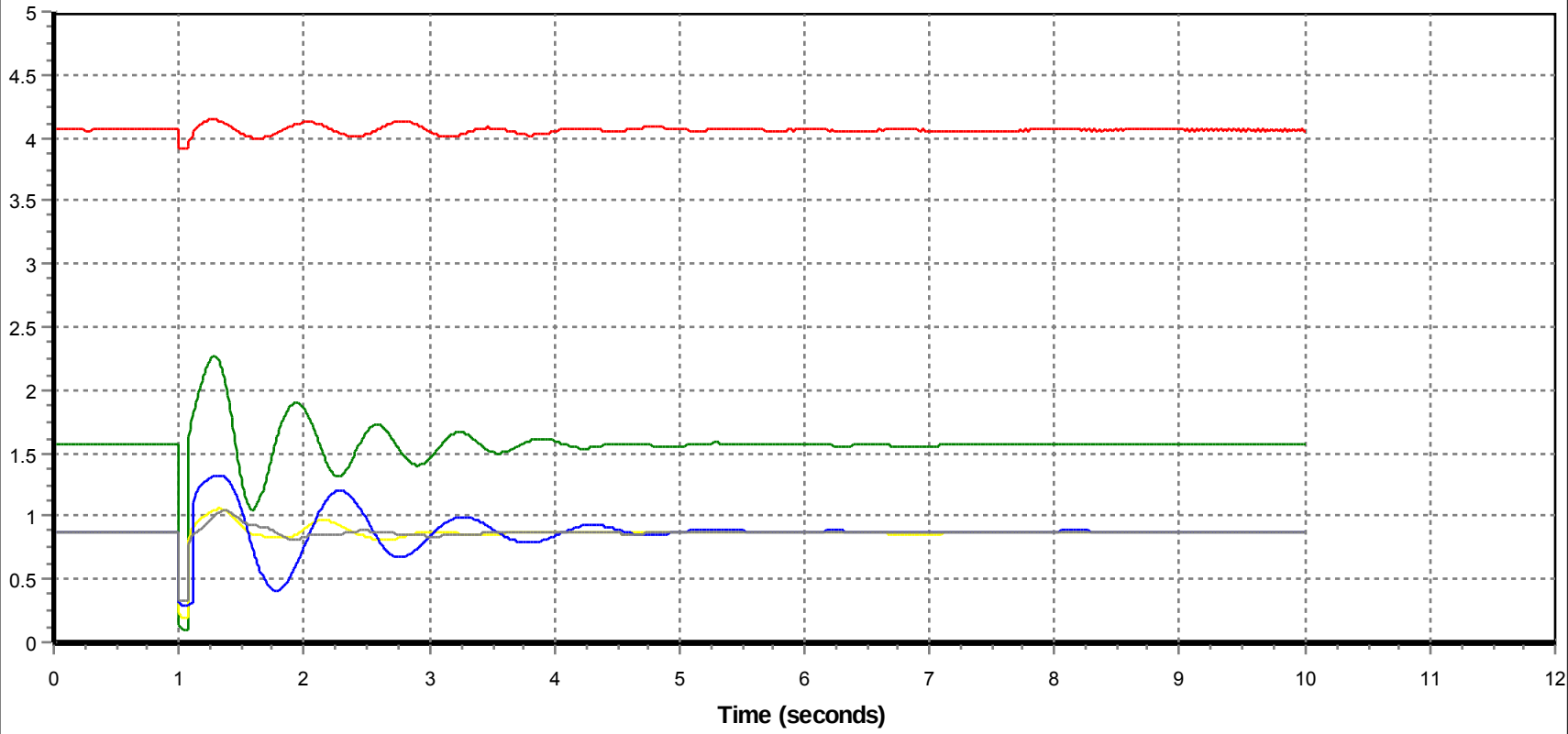

6 - POWR 424[KEEP#2GN 19.000]2 : C303_3pfault_Dover_trip_9L74

7 - POWR 18274[MACKAY2 18.000]1 : C303_3pfault_Dover_trip_9L74

8 - POWR 3745[DOVERN 13.800]G1 : C303_3pfault_Dover_trip_9L74

9 - POWR 19669[MRCP 13.800]1 : C303_3pfault_Dover_trip_9L74

10 - POWR 10236[MUSKEG4 13.800]1 : C303_3pfault_Dover_trip_9L74

Frequence Deviation

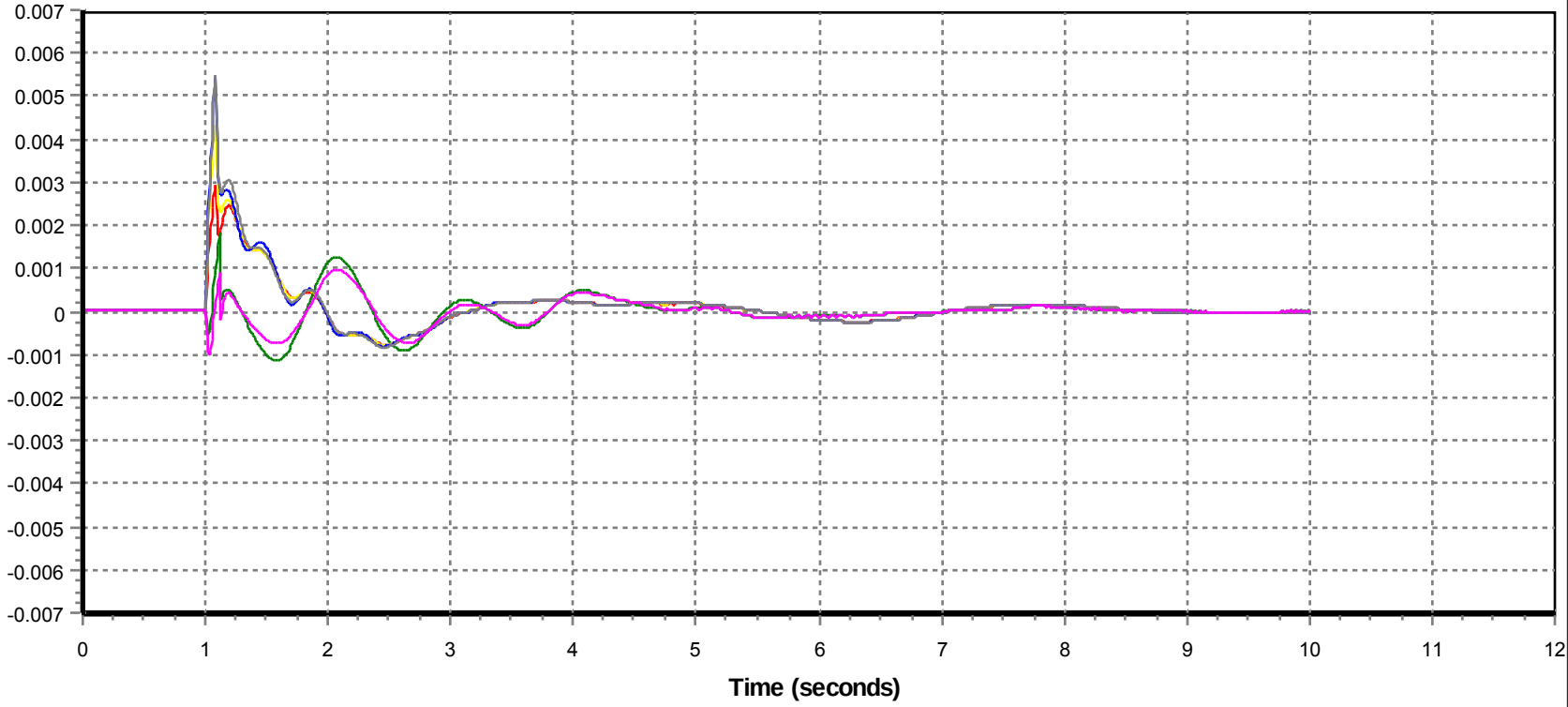

11 - FREQ 1601 [THICKWD1 500.00] : C303_3pfault_Dover_trip_9L74

12 - FREQ 1670 [BIRCHWOOD 240.00] : C303_3pfault_Dover_trip_9L74

13 - FREQ 666 [DOVER 240.00] : C303_3pfault_Dover_trip_9L74

14 - FREQ 1263 [JOSLYN4 240.00] : C303_3pfault_Dover_trip_9L74

15 - FREQ 98503 [ELLSR 240.00] : C303_3pfault_Dover_trip_9L74

16 - FREQ 1288 [LIVOCK01 240.00] : C303_3pfault_Dover_trip_9L74

Voltage

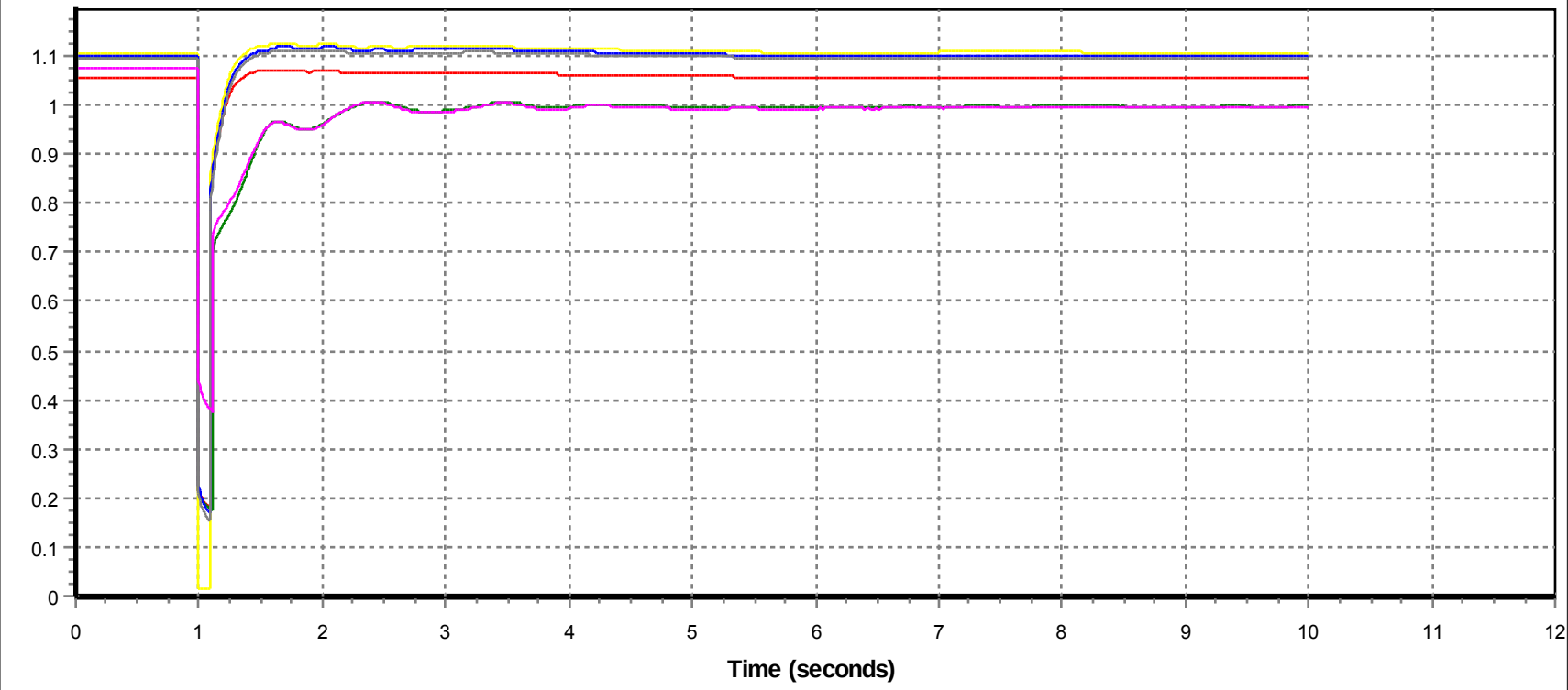

17 - VOLT 1601 [THICKWD1 500.00] : C303_3pfault_Dover_trip_9L74

18 - VOLT 1670 [BIRCHWOOD 240.00] : C303_3pfault_Dover_trip_9L74

19 - VOLT 666 [DOVER 240.00] : C303_3pfault_Dover_trip_9L74

20 - VOLT 1263 [JOSLYN4 240.00] : C303_3pfault_Dover_trip_9L74

21 - VOLT 98503 [ELLSR 240.00] : C303_3pfault_Dover_trip_9L74

22 - VOLT 1288 [LIVOCK01 240.00] : C303_3pfault_Dover_trip_9L74

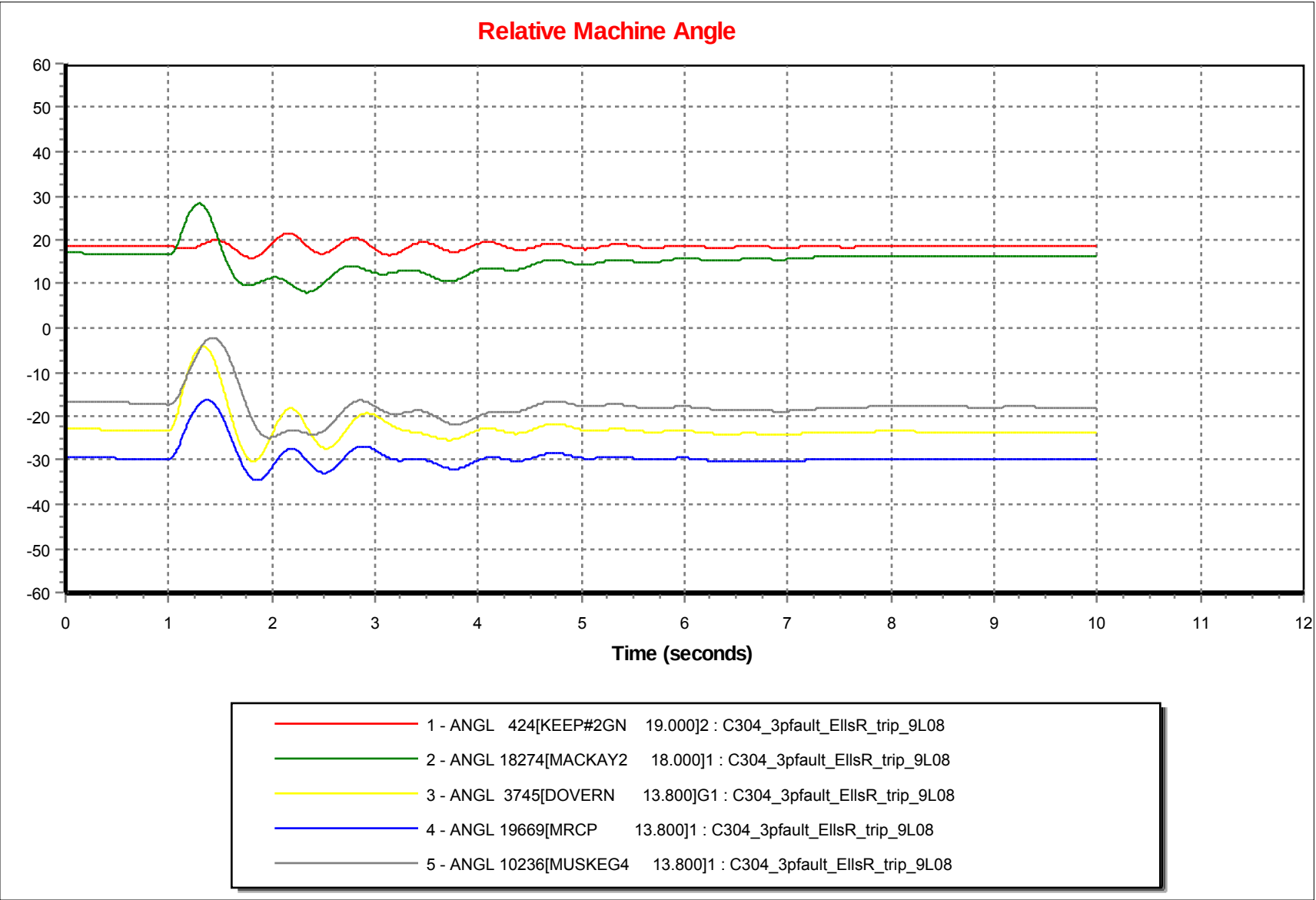
Relative Machine Angle
60
50
40
30
20
10
0
-10
-20
-30
-40
-50
-60
0
1
2
3
4
5
6
7
8
9
10
11
12
Time (seconds)
1 - ANGL 424[KEEP#2GN 19.000]2 : C304_3pfault_EllsR_trip_9L08
2 - ANGL 18274[MACKAY2 18.000]1 : C304_3pfault_EllsR_trip_9L08
3 - ANGL 3745[DOVERN 13.800]G1 : C304_3pfault_EllsR_trip_9L08
4 - ANGL 19669[MRCP 13.800]1 : C304_3pfault_EllsR_trip_9L08
5 - ANGL 10236[MUSKEG4 13.800]1 : C304_3pfault_EllsR_trip_9L08

Machine Power

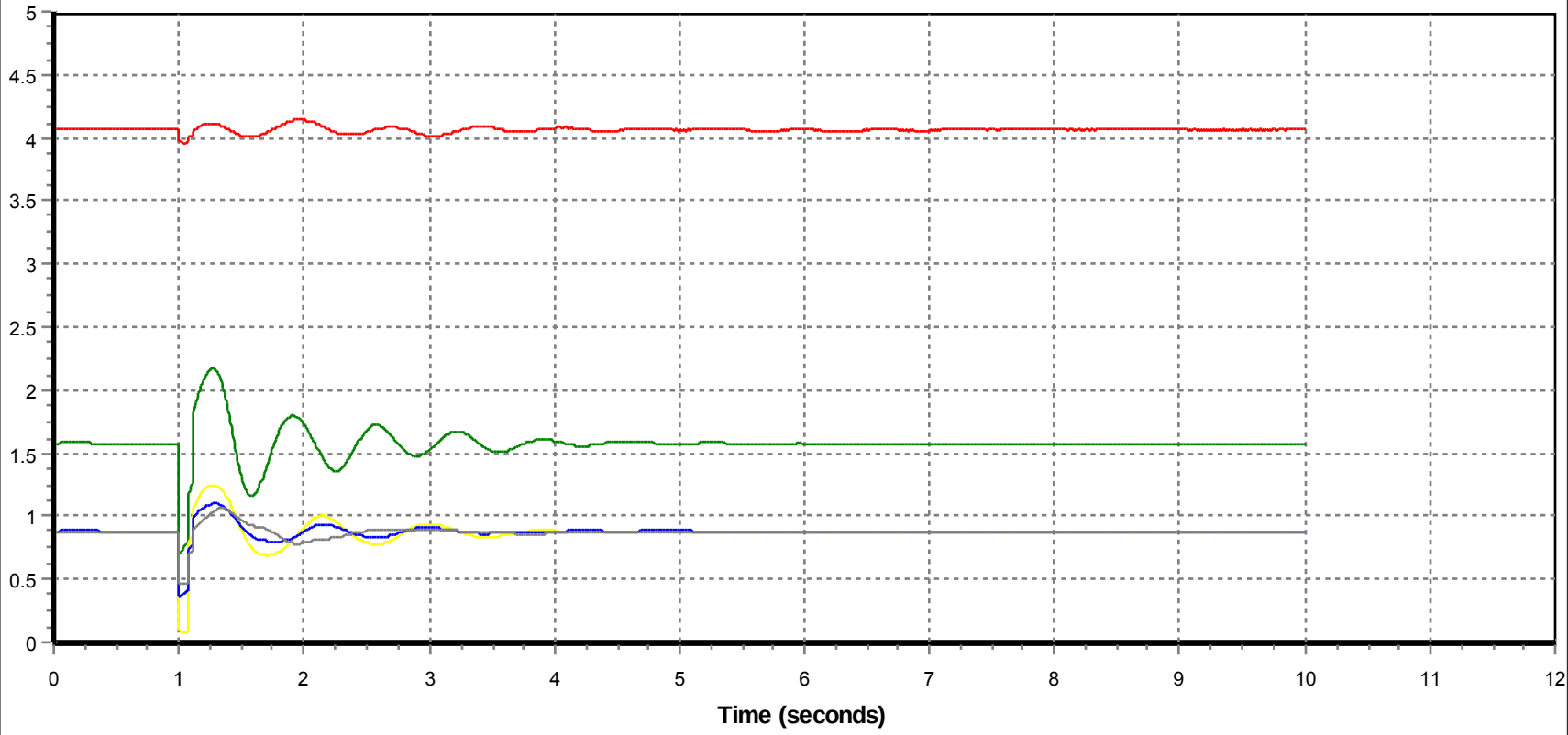

6 - POWR 424[KEEP#2GN 19.000]2 : C304_3pfault_EllsR_trip_9L08

7 - POWR 18274[MACKAY2 18.000]1 : C304_3pfault_EllsR_trip_9L08

8 - POWR 3745[DOVERN 13.800]G1 : C304_3pfault_EllsR_trip_9L08

9 - POWR 19669[MRCP 13.800]1 : C304_3pfault_EllsR_trip_9L08

10 - POWR 10236[MUSKEG4 13.800]1 : C304_3pfault_EllsR_trip_9L08

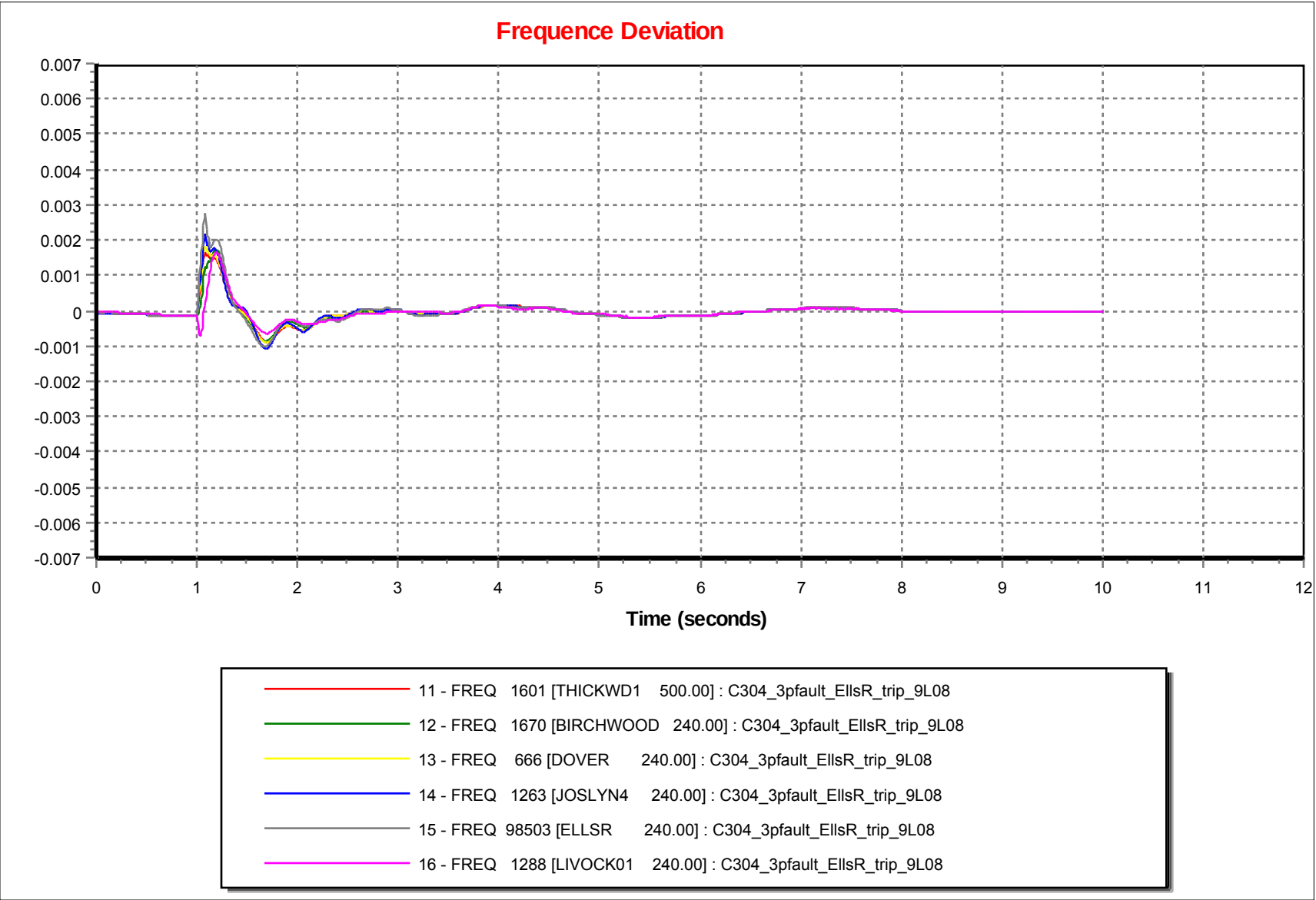
Frequence Deviation
0.007
0.006
0.005
0.004
0.003
0.002
0.001
0
-0.001
-0.002
-0.003
-0.004
-0.005
-0.006
-0.007
0
1
2
3
4
5
6
7
8
9
10
11
12
Time (seconds)
11 - FREQ 1601 [THICKWD1 500.00] : C304_3pfault_EllsR_trip_9L08
12 - FREQ 1670 [BIRCHWOOD 240.00] : C304_3pfault_EllsR_trip_9L08
13 - FREQ 666 [DOVER 240.00] : C304_3pfault_EllsR_trip_9L08
14 - FREQ 1263 [JOSLYN4 240.00] : C304_3pfault_EllsR_trip_9L08
15 - FREQ 98503 [ELLSR 240.00] : C304_3pfault_EllsR_trip_9L08
16 - FREQ 1288 [LIVOCK01 240.00] : C304_3pfault_EllsR_trip_9L08

Voltage

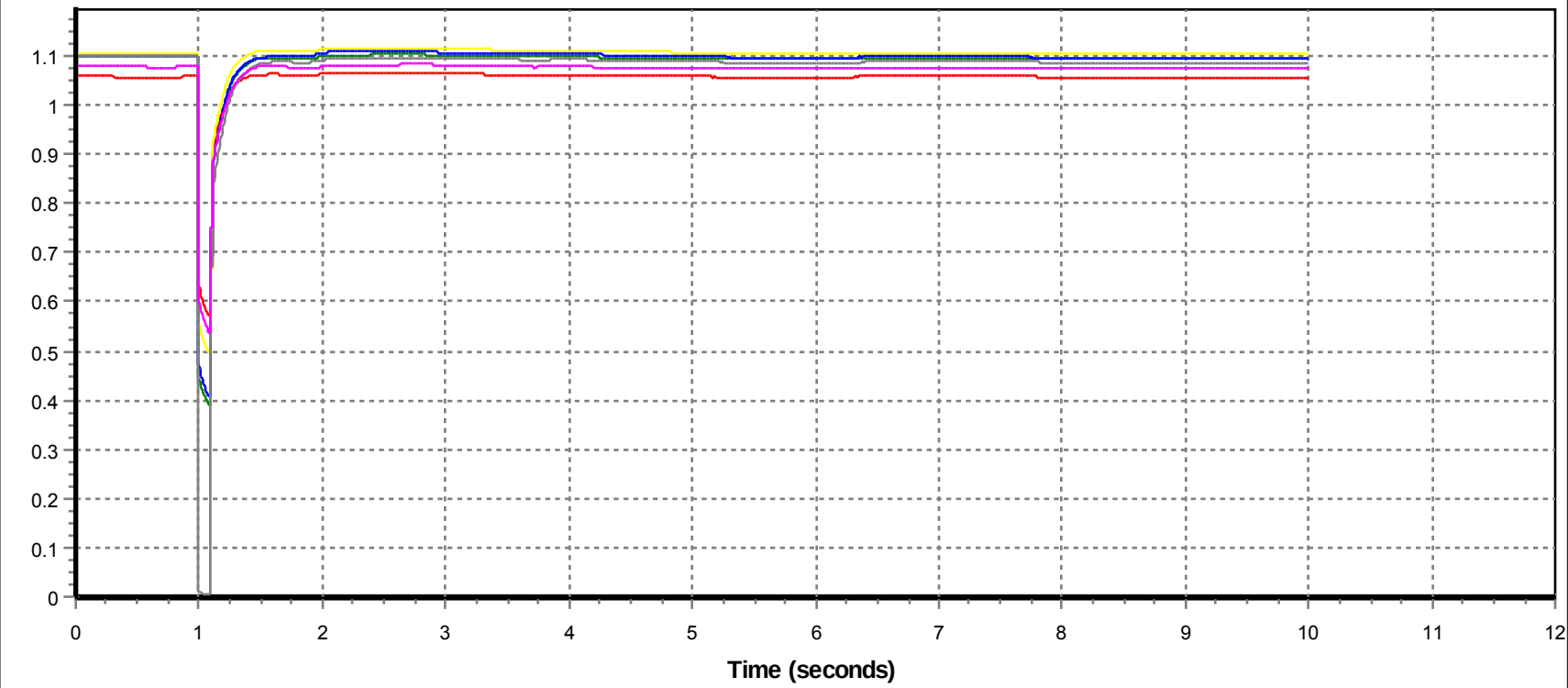

17 - VOLT 1601 [THICKWD1 500.00] : C304_3pfault_EllsR_trip_9L08

18 - VOLT 1670 [BIRCHWOOD 240.00] : C304_3pfault_EllsR_trip_9L08

19 - VOLT 666 [DOVER 240.00] : C304_3pfault_EllsR_trip_9L08

20 - VOLT 1263 [JOSLYN4 240.00] : C304_3pfault_EllsR_trip_9L08

21 - VOLT 98503 [ELLSR 240.00] : C304_3pfault_EllsR_trip_9L08

22 - VOLT 1288 [LIVOCK01 240.00] : C304_3pfault_EllsR_trip_9L08

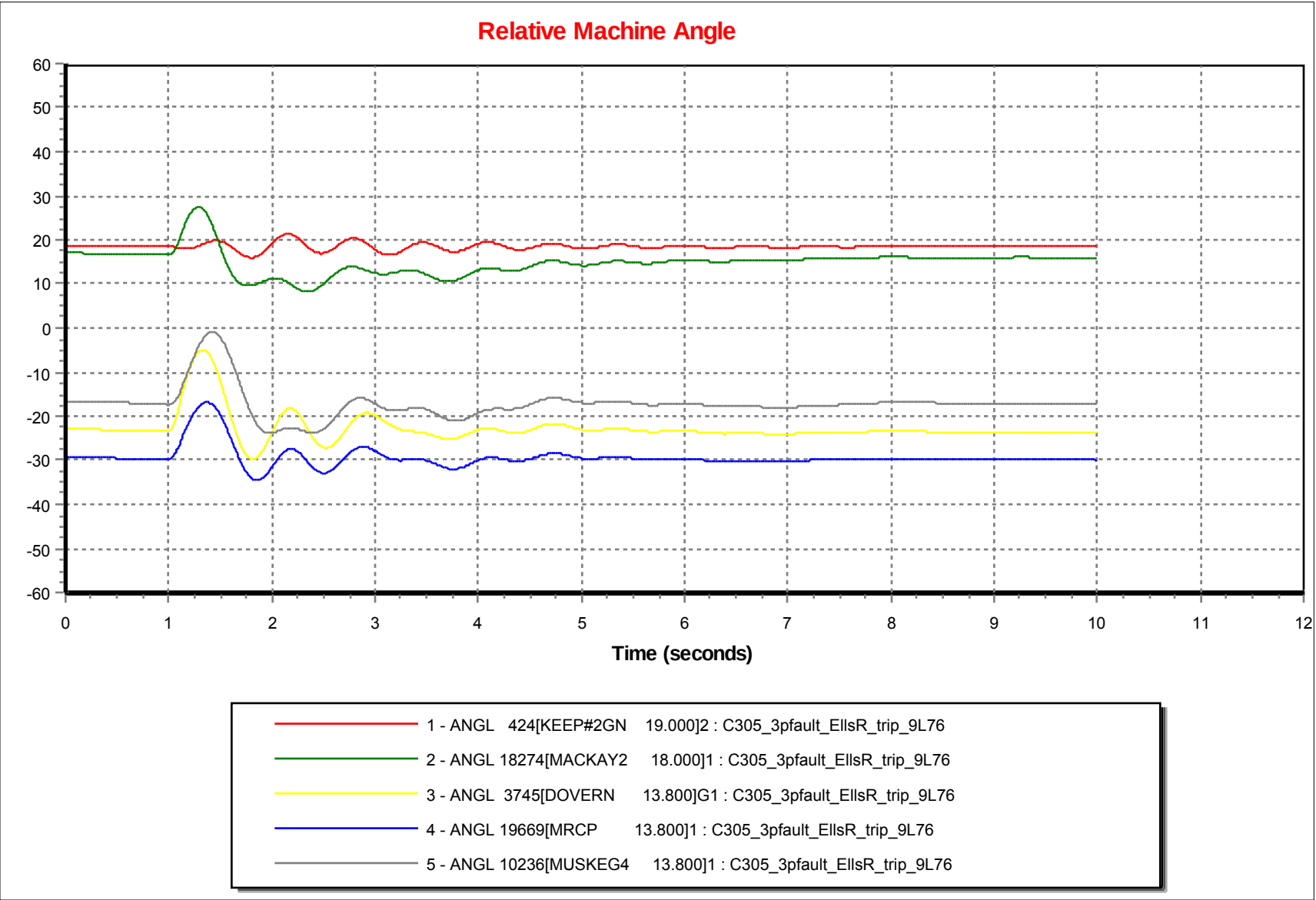
Relative Machine Angle
60
50
40
30
20
10
0
-10
-20
-30
-40
-50
-60
0
1
2
3
4
5
6
7
8
9
10
11
12
Time (seconds)
1 - ANGL 424[KEEP#2GN 19.000]2 : C305_3pfault_EllsR_trip_9L76
2 - ANGL 18274[MACKAY2 18.000]1 : C305_3pfault_EllsR_trip_9L76
3 - ANGL 3745[DOVERN 13.800]G1 : C305_3pfault_EllsR_trip_9L76
4 - ANGL 19669[MRCP 13.800]1 : C305_3pfault_EllsR_trip_9L76
5 - ANGL 10236[MUSKEG4 13.800]1 : C305_3pfault_EllsR_trip_9L76

Machine Power

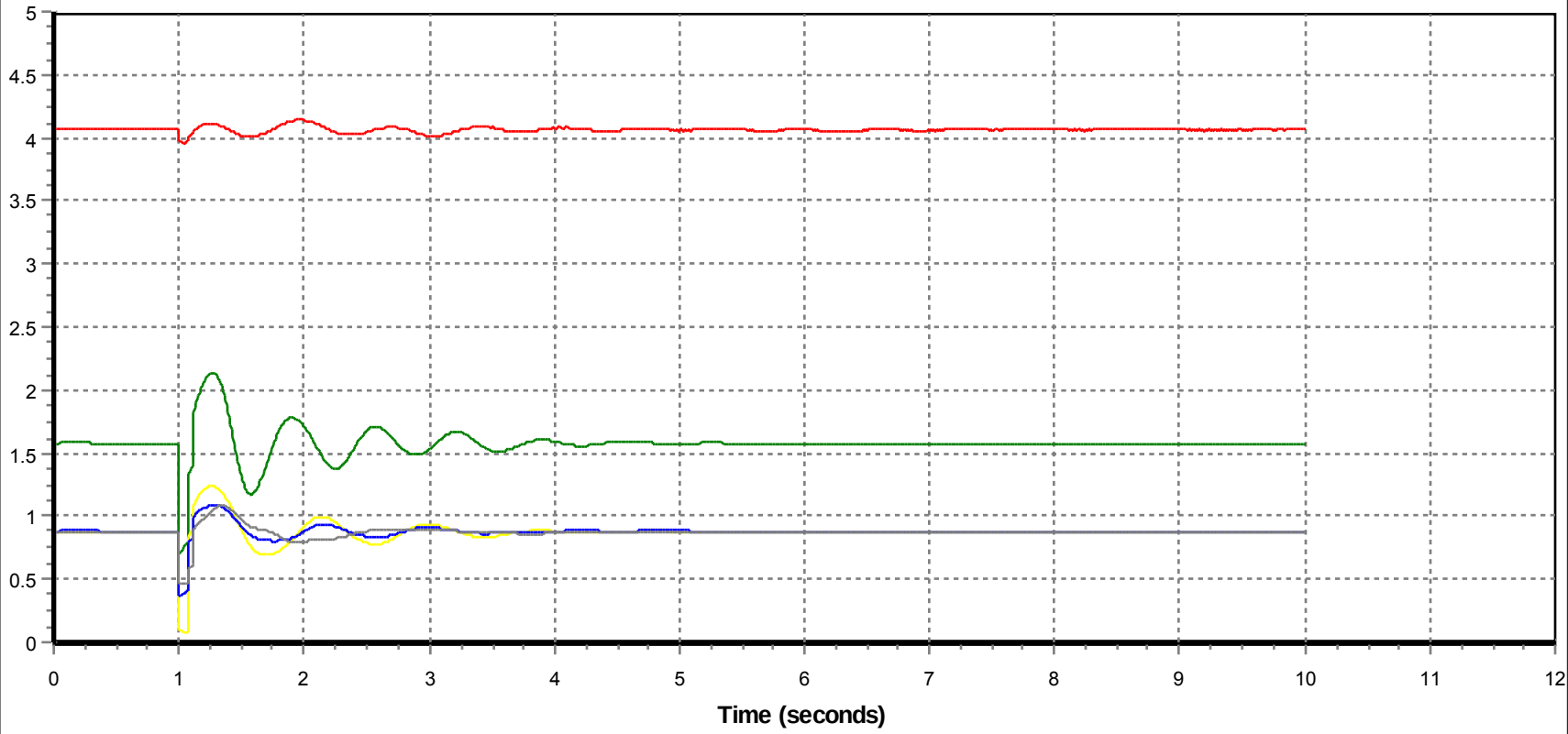

6 - POWR 424[KEEP#2GN 19.000]2 : C305_3pfault_EllsR_trip_9L76

7 - POWR 18274[MACKAY2 18.000]1 : C305_3pfault_EllsR_trip_9L76

8 - POWR 3745[DOVERN 13.800]G1 : C305_3pfault_EllsR_trip_9L76

9 - POWR 19669[MRCP 13.800]1 : C305_3pfault_EllsR_trip_9L76

10 - POWR 10236[MUSKEG4 13.800]1 : C305_3pfault_EllsR_trip_9L76

Frequence Deviation

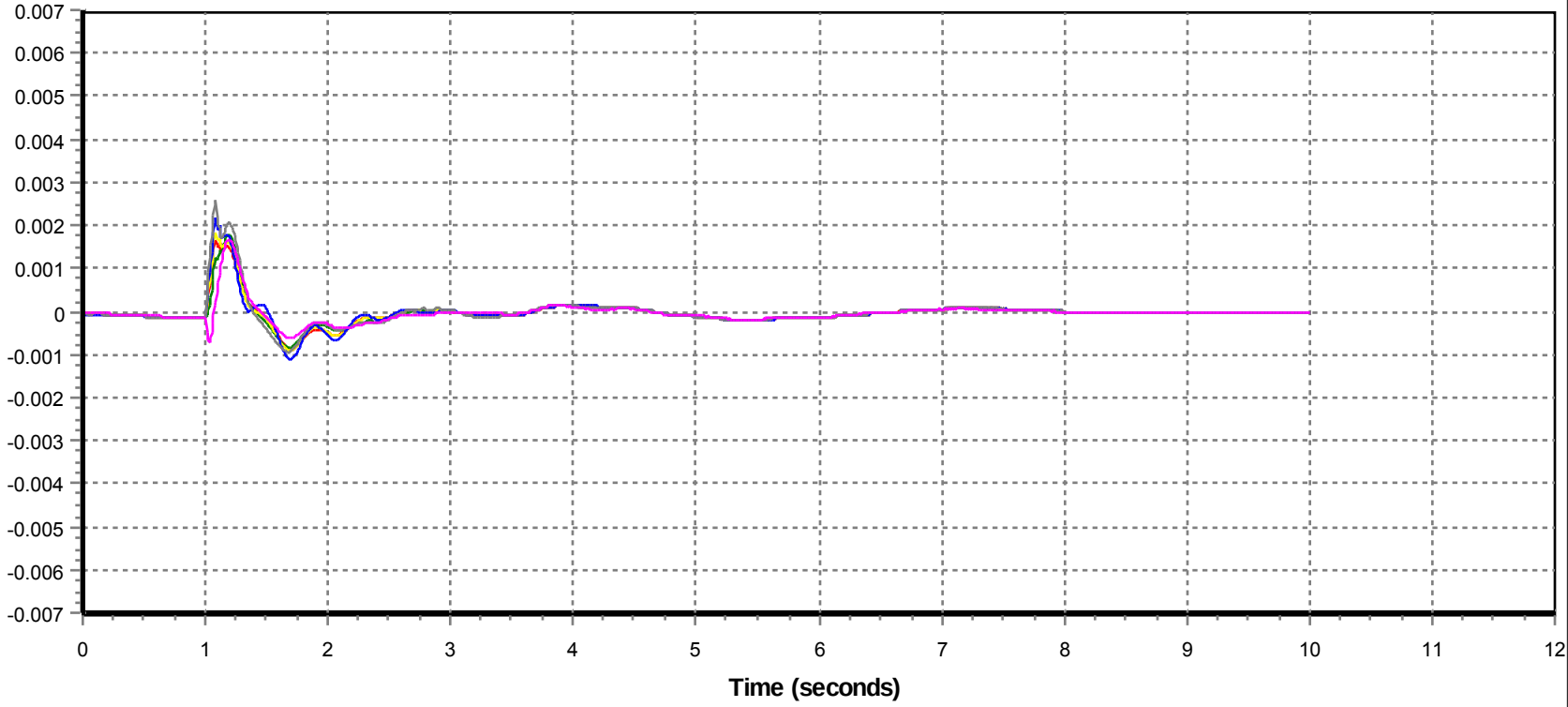

11 - FREQ 1601 [THICKWD1 500.00] : C305_3pfault_EllsR_trip_9L76

12 - FREQ 1670 [BIRCHWOOD 240.00] : C305_3pfault_EllsR_trip_9L76

13 - FREQ 666 [DOVER 240.00] : C305_3pfault_EllsR_trip_9L76

14 - FREQ 1263 [JOSLYN4 240.00] : C305_3pfault_EllsR_trip_9L76

15 - FREQ 98503 [ELLSR 240.00] : C305_3pfault_EllsR_trip_9L76

16 - FREQ 1288 [LIVOCK01 240.00] : C305_3pfault_EllsR_trip_9L76

Voltage

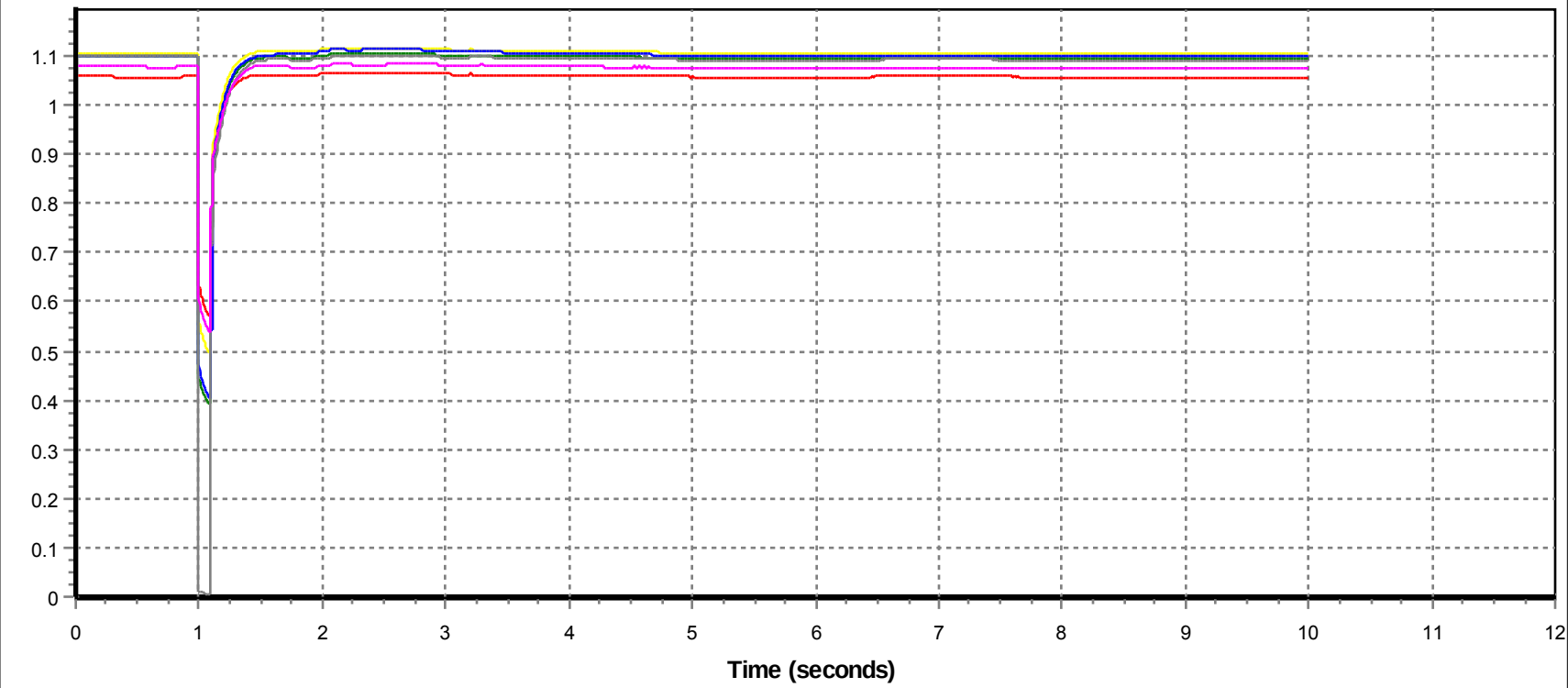

17 - VOLT 1601 [THICKWD1 500.00] : C305_3pfault_EllsR_trip_9L76

18 - VOLT 1670 [BIRCHWOOD 240.00] : C305_3pfault_EllsR_trip_9L76

19 - VOLT 666 [DOVER 240.00] : C305_3pfault_EllsR_trip_9L76

20 - VOLT 1263 [JOSLYN4 240.00] : C305_3pfault_EllsR_trip_9L76

21 - VOLT 98503 [ELLSR 240.00] : C305_3pfault_EllsR_trip_9L76

22 - VOLT 1288 [LIVOCK01 240.00] : C305_3pfault_EllsR_trip_9L76

Category C5 Fault Analysis Results

Category C5 fault analysis was performed for 2020 winter peak case with NW FMM development. Category C5 faults are defined as double line-to-ground faults of a double circuited transmission tower with normal clearing time. Table J-3 summarizes the fault descriptions and results for the Category C5 fault analysis. Specific transient simulation plots for Category C5 contingencies can be found in this Appendix J.

TABLE J-3

STABILITY RESULTS FOR CATEGORY C5 FAULTS

Case ID	Description	Observations
C501	Double line to ground fault at Ells River 240kV double ckt line 9L08/9L76 5 cycles: trip Ells River CB on 9L08 to Dover 888S 5 cycles: trip Ells River CB on 9L76 to Joslyn 849S 7 cycles: trip Dover CB on 9L08 7 cycles: trip Joslyn CB on 9L76	System stable Good voltage recovery
C502	Double line to ground fault at Dover 240kV double ckt line 9L08/9L09 5 cycles: trip Dover CB on 9L08 to Ells River 2079S 5 cycles: trip Dover CB on 9L09 to Joslyn 849S 7 cycles: trip Ells River CB on 9L08 7 cycles: trip Joslyn CB on 9L09	System stable Good voltage recovery
C503	Double line to ground fault at Joslyn 240kV double ckt line 9L76/9L09 5 cycles: trip Joslyn 849S CB on 9L76 to Ells River 2079S 5 cycles: trip Joslyn 849S CB on 9L09 to Dover 888S 7 cycles: trip Ells River CB on 9L76 7 cycles: trip Dover CB on 9L09	System stable Good voltage recovery
C504	Double line to ground fault at Dover 240kV double ckt line 9L74/9L30 5 cycles: trip Dover CB on 9L74 to Birchwood 960S 5 cycles: trip Dover CB on 9L30 to Thickwood 951S 7 cycles: trip Birchwood CB on 9L74 7 cycles: trip Thickwood CB on 9L30	System stable Good voltage recovery
C505	Double line to ground fault at Dover 240kV double ckt line 9L01/9L68 5 cycles: trip Dover CB on 9L01 to Ruth Lake 848S 5 cycles: trip Dover CB on 9L68 to Thickwood 951S 7 cycles: trip Ruth Lake CB on 9L01 7 cycles: trip Thickwood CB on 9L68	System stable Good voltage recovery

Relative Machine Angle

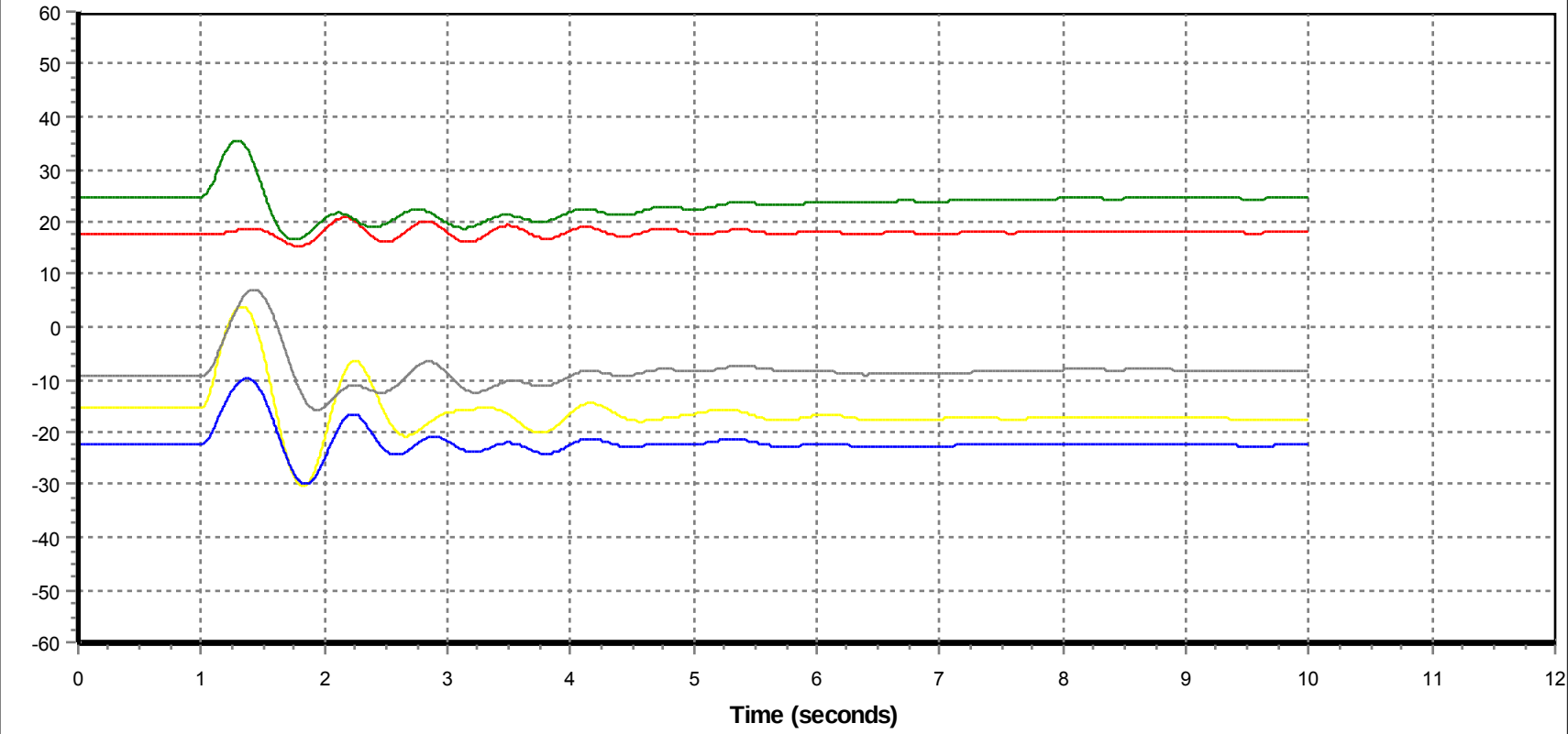

1 - ANGL 424[KEEP#2GN 19.000]2 : C501_3pfault_EllsR_trip_9L08_76

2 - ANGL 18274[MACKAY2 18.000]1 : C501_3pfault_EllsR_trip_9L08_76

3 - ANGL 3745[DOVERN 13.800]G1 : C501_3pfault_EllsR_trip_9L08_76

4 - ANGL 19669[MRCP 13.800]1 : C501_3pfault_EllsR_trip_9L08_76

5 - ANGL 10236[MUSKEG4 13.800]1 : C501_3pfault_EllsR_trip_9L08_76

Machine Power

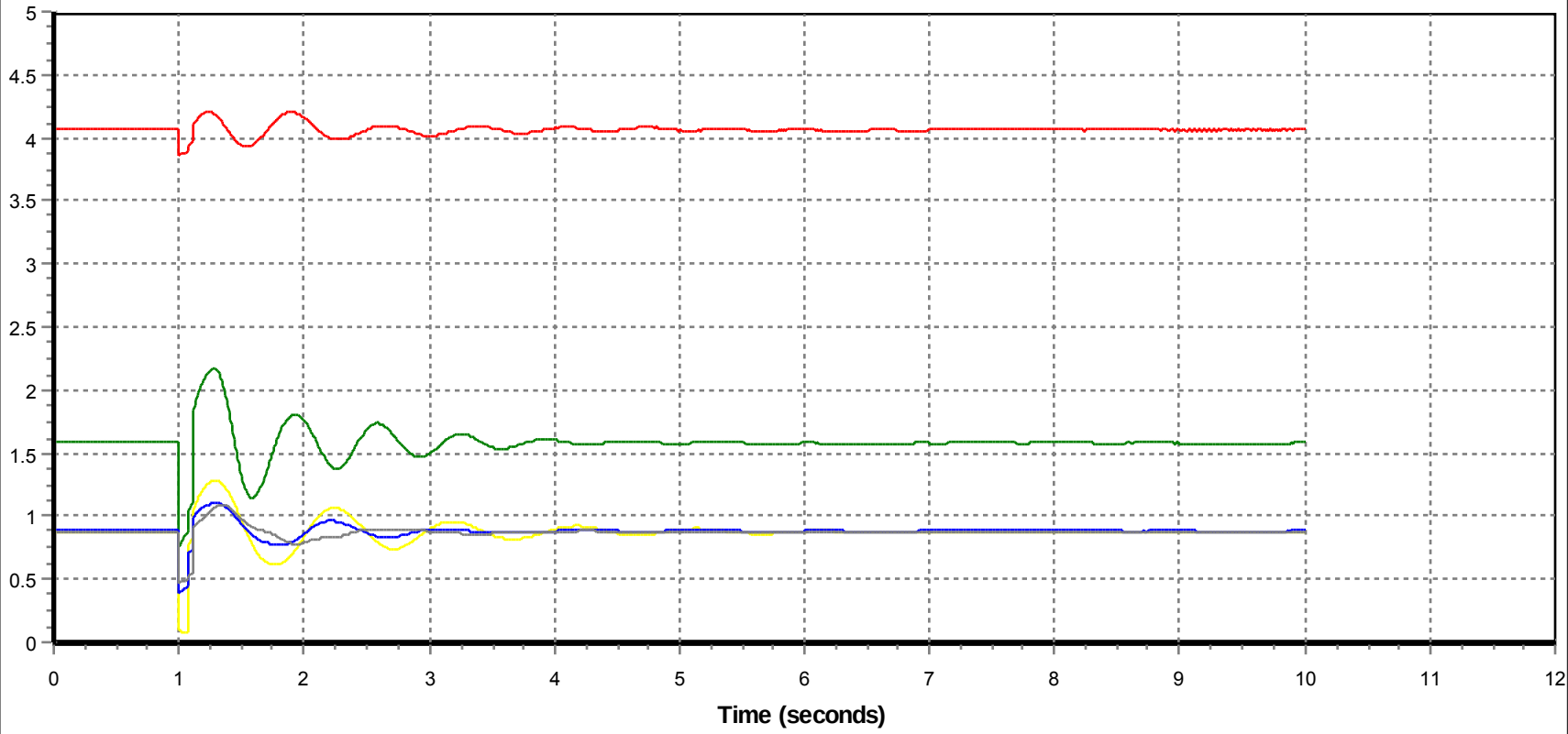

6 - POWR 424[KEEP#2GN 19.000]2 : C501_3pfault_EllsR_trip_9L08_76

7 - POWR 18274[MACKAY2 18.000]1 : C501_3pfault_EllsR_trip_9L08_76

8 - POWR 3745[DOVERN 13.800]G1 : C501_3pfault_EllsR_trip_9L08_76

9 - POWR 19669[MRCP 13.800]1 : C501_3pfault_EllsR_trip_9L08_76

10 - POWR 10236[MUSKEG4 13.800]1 : C501_3pfault_EllsR_trip_9L08_76

Frequence Deviation

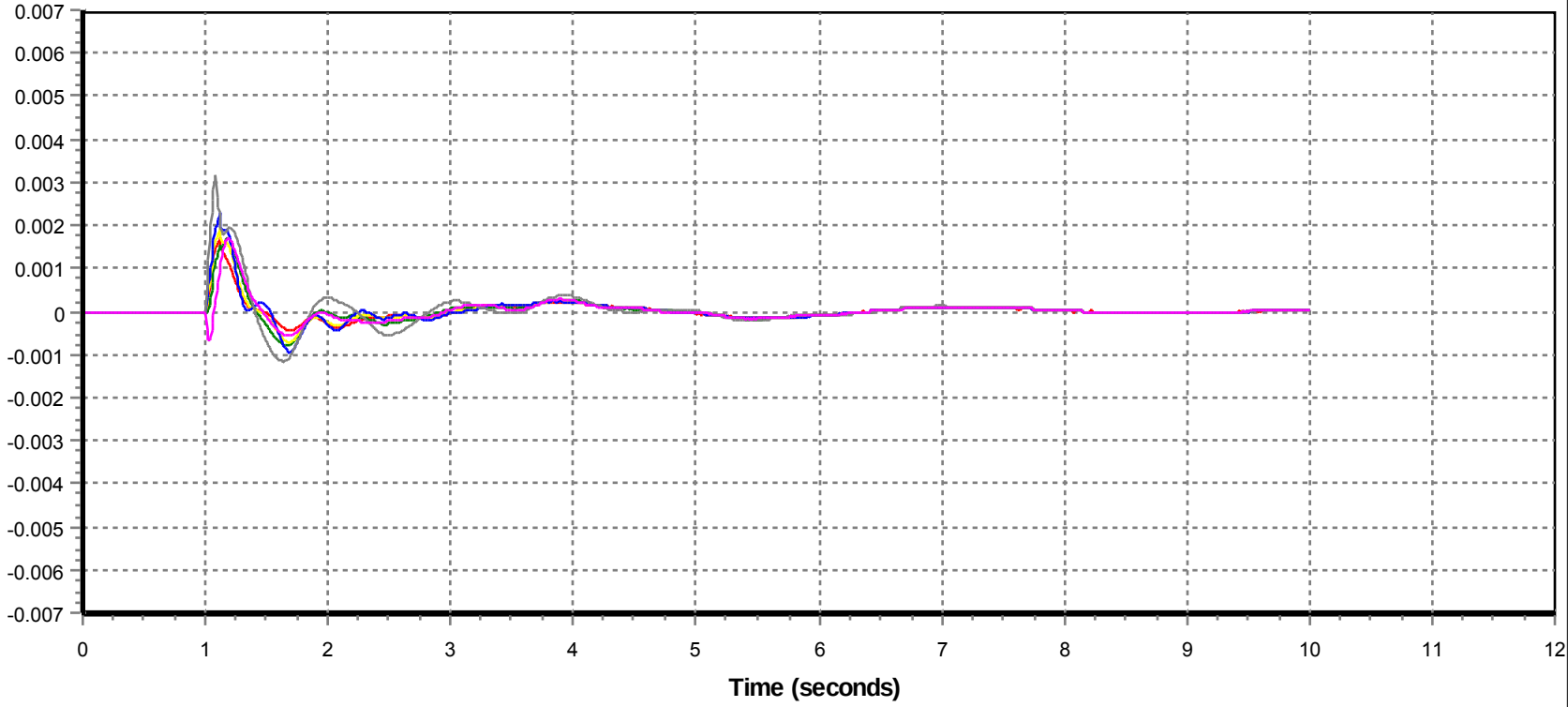

11 - FREQ 1601 [THICKWD1 500.00] : C501_3pfault_EllsR_trip_9L08_76

12 - FREQ 1670 [BIRCHWOOD 240.00] : C501_3pfault_EllsR_trip_9L08_76

13 - FREQ 666 [DOVER 240.00] : C501_3pfault_EllsR_trip_9L08_76

14 - FREQ 1263 [JOSLYN4 240.00] : C501_3pfault_EllsR_trip_9L08_76

15 - FREQ 98503 [ELLSR 240.00] : C501_3pfault_EllsR_trip_9L08_76

16 - FREQ 1288 [LIVOCK01 240.00] : C501_3pfault_EllsR_trip_9L08_76

Voltage

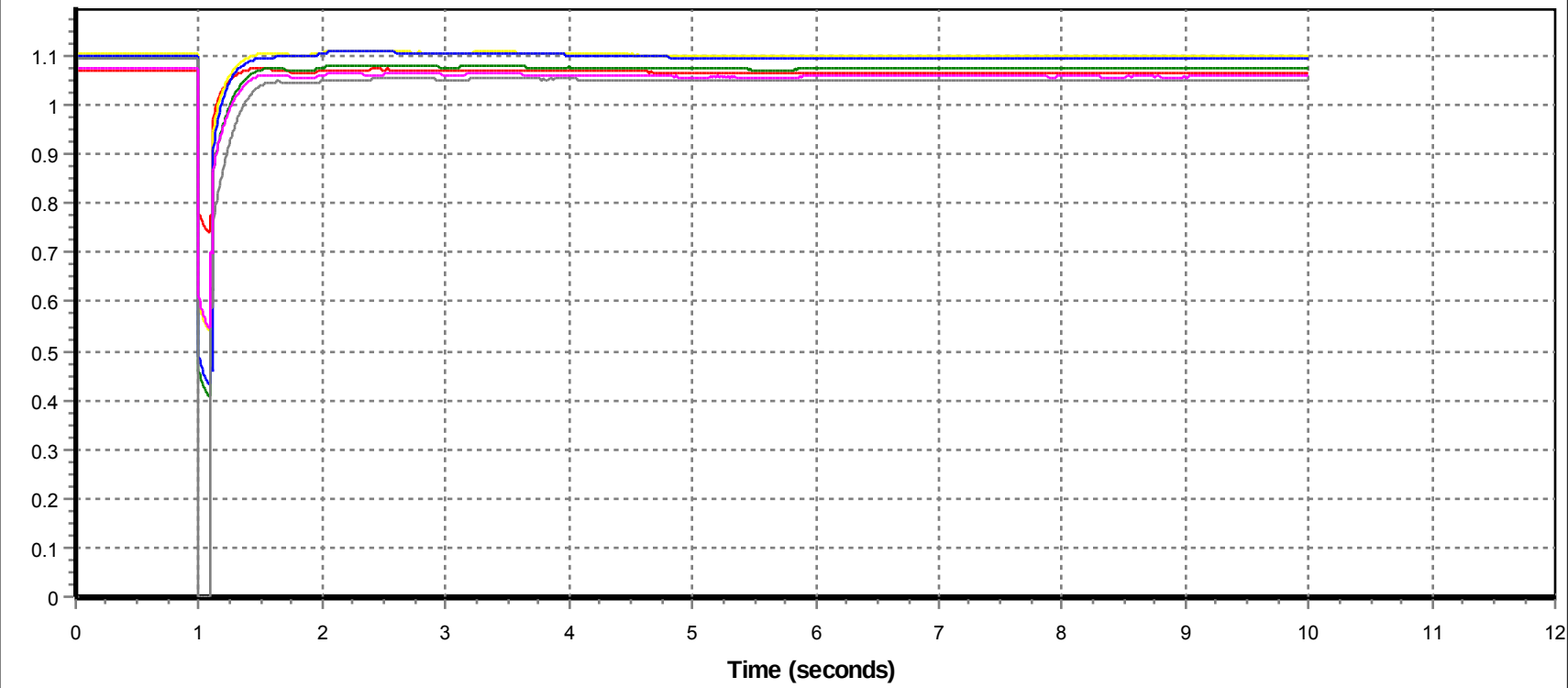

17 - VOLT 1601 [THICKWD1 500.00] : C501_3pfault_EllsR_trip_9L08_76

18 - VOLT 1670 [BIRCHWOOD 240.00] : C501_3pfault_EllsR_trip_9L08_76

19 - VOLT 666 [DOVER 240.00] : C501_3pfault_EllsR_trip_9L08_76

20 - VOLT 1263 [JOSLYN4 240.00] : C501_3pfault_EllsR_trip_9L08_76

21 - VOLT 98503 [ELLSR 240.00] : C501_3pfault_EllsR_trip_9L08_76

22 - VOLT 1288 [LIVOCK01 240.00] : C501_3pfault_EllsR_trip_9L08_76

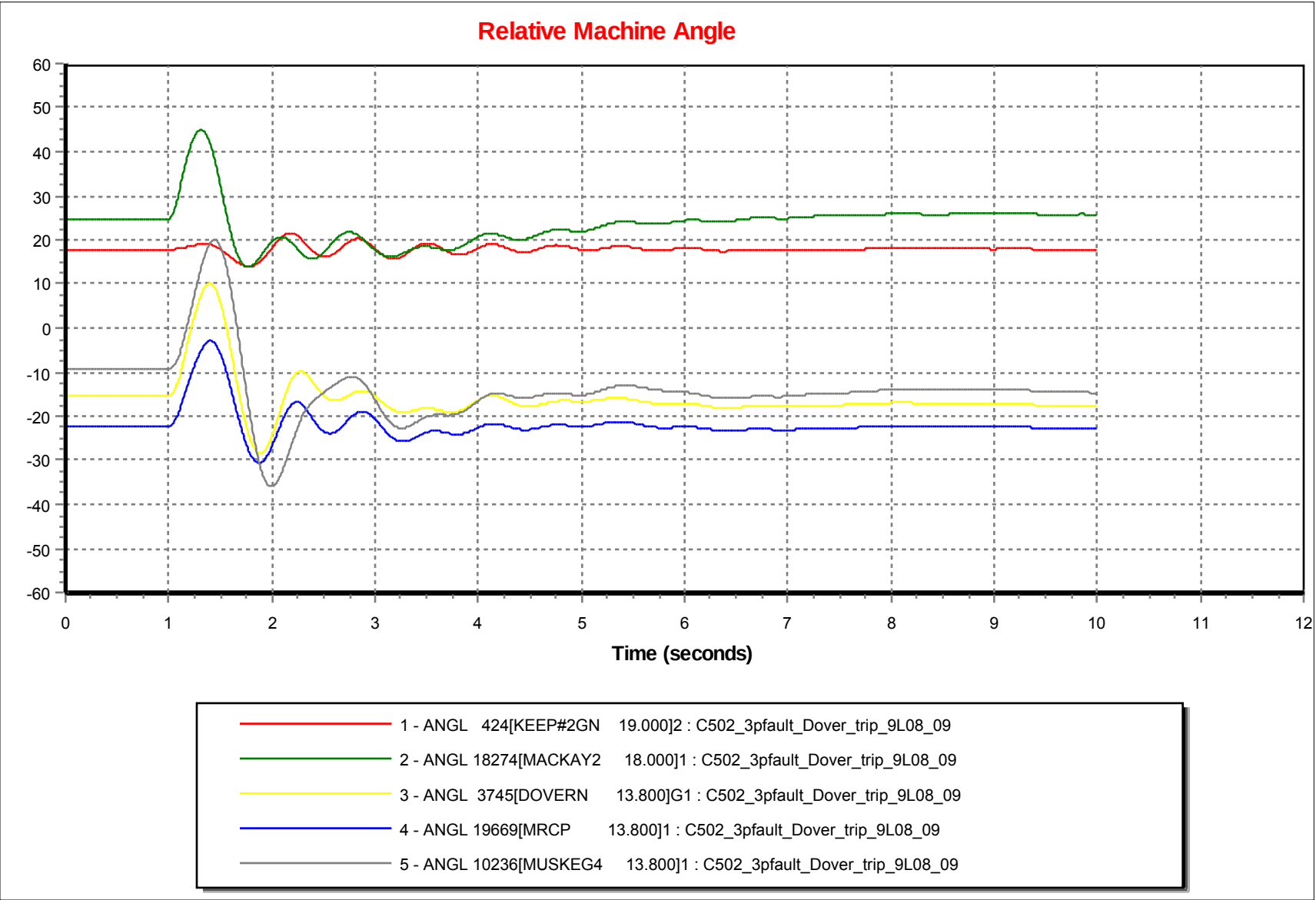
Relative Machine Angle
60
50
40
30
20
10
0
-10
-20
-30
-40
-50
-60
0
1
2
3
4
5
6
7
8
9
10
11
12
Time (seconds)
1 - ANGL 424[KEEP#2GN 19.000]2 : C502_3pfault_Dover_trip_9L08_09
2 - ANGL 18274[MACKAY2 18.000]1 : C502_3pfault_Dover_trip_9L08_09
3 - ANGL 3745[DOVERN 13.800]G1 : C502_3pfault_Dover_trip_9L08_09
4 - ANGL 19669[MRCP 13.800]1 : C502_3pfault_Dover_trip_9L08_09
5 - ANGL 10236[MUSKEG4 13.800]1 : C502_3pfault_Dover_trip_9L08_09

Machine Power

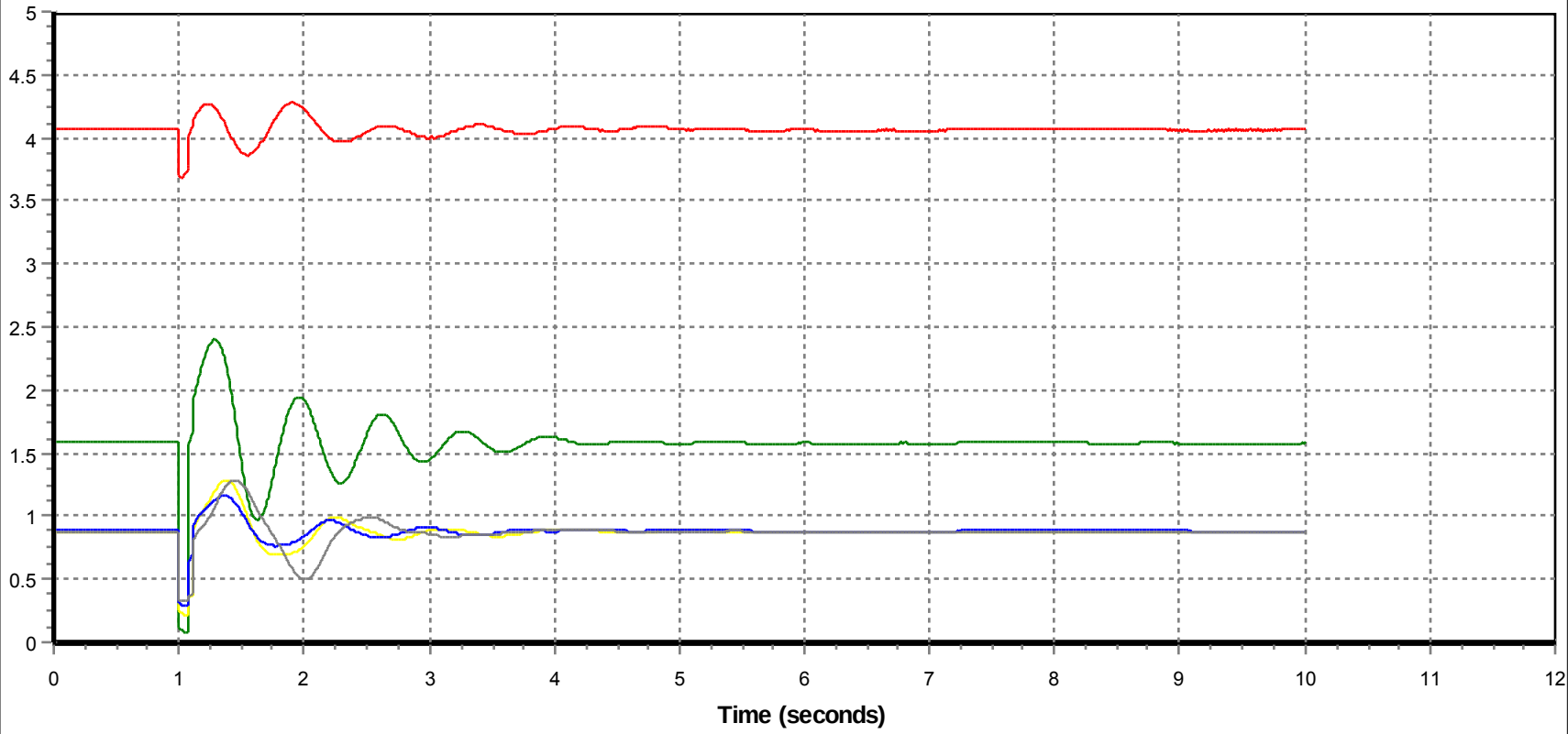

6 - POWR 424[KEEP#2GN 19.000]2 : C502_3pfault_Dover_trip_9L08_09

7 - POWR 18274[MACKAY2 18.000]1 : C502_3pfault_Dover_trip_9L08_09

8 - POWR 3745[DOVERN 13.800]G1 : C502_3pfault_Dover_trip_9L08_09

9 - POWR 19669[MRCP 13.800]1 : C502_3pfault_Dover_trip_9L08_09

10 - POWR 10236[MUSKEG4 13.800]1 : C502_3pfault_Dover_trip_9L08_09

Frequence Deviation

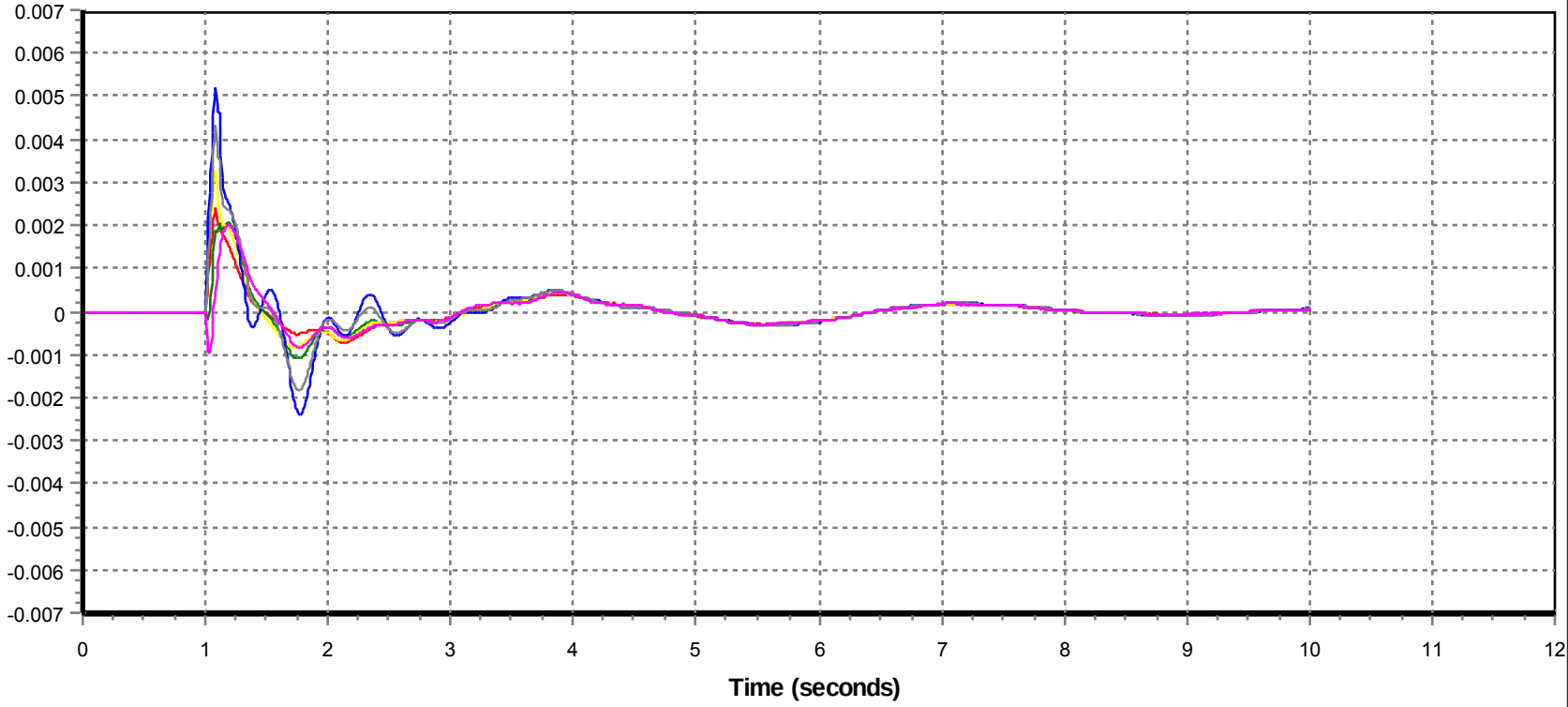

11 - FREQ 1601 [THICKWD1 500.00] : C502_3pfault_Dover_trip_9L08_09

12 - FREQ 1670 [BIRCHWOOD 240.00] : C502_3pfault_Dover_trip_9L08_09

13 - FREQ 666 [DOVER 240.00] : C502_3pfault_Dover_trip_9L08_09

14 - FREQ 1263 [JOSLYN4 240.00] : C502_3pfault_Dover_trip_9L08_09

15 - FREQ 98503 [ELLSR 240.00] : C502_3pfault_Dover_trip_9L08_09

16 - FREQ 1288 [LIVOCK01 240.00] : C502_3pfault_Dover_trip_9L08_09

Voltage

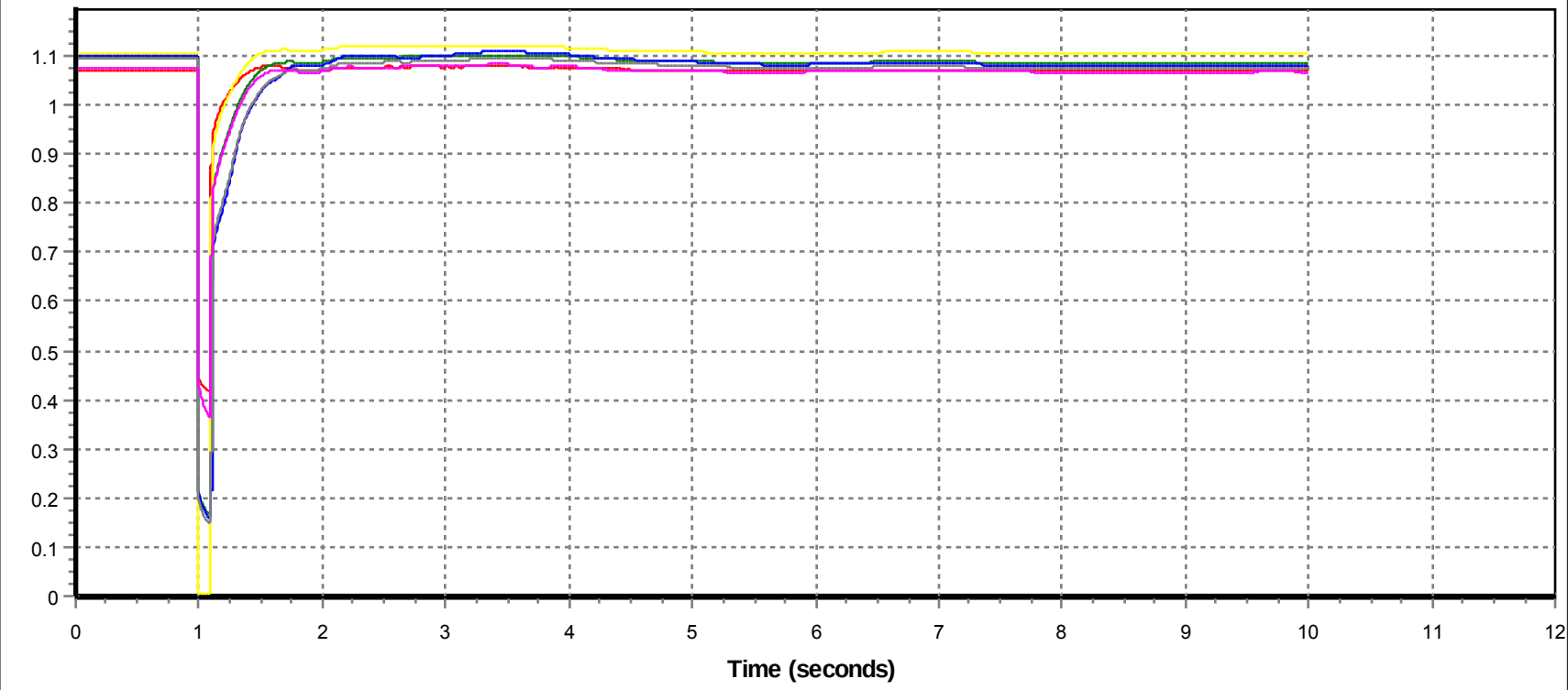

17 - VOLT 1601 [THICKWD1 500.00] : C502_3pfault_Dover_trip_9L08_09

18 - VOLT 1670 [BIRCHWOOD 240.00] : C502_3pfault_Dover_trip_9L08_09

19 - VOLT 666 [DOVER 240.00] : C502_3pfault_Dover_trip_9L08_09

20 - VOLT 1263 [JOSLYN4 240.00] : C502_3pfault_Dover_trip_9L08_09

21 - VOLT 98503 [ELLSR 240.00] : C502_3pfault_Dover_trip_9L08_09

22 - VOLT 1288 [LIVOCK01 240.00] : C502_3pfault_Dover_trip_9L08_09

Relative Machine Angle

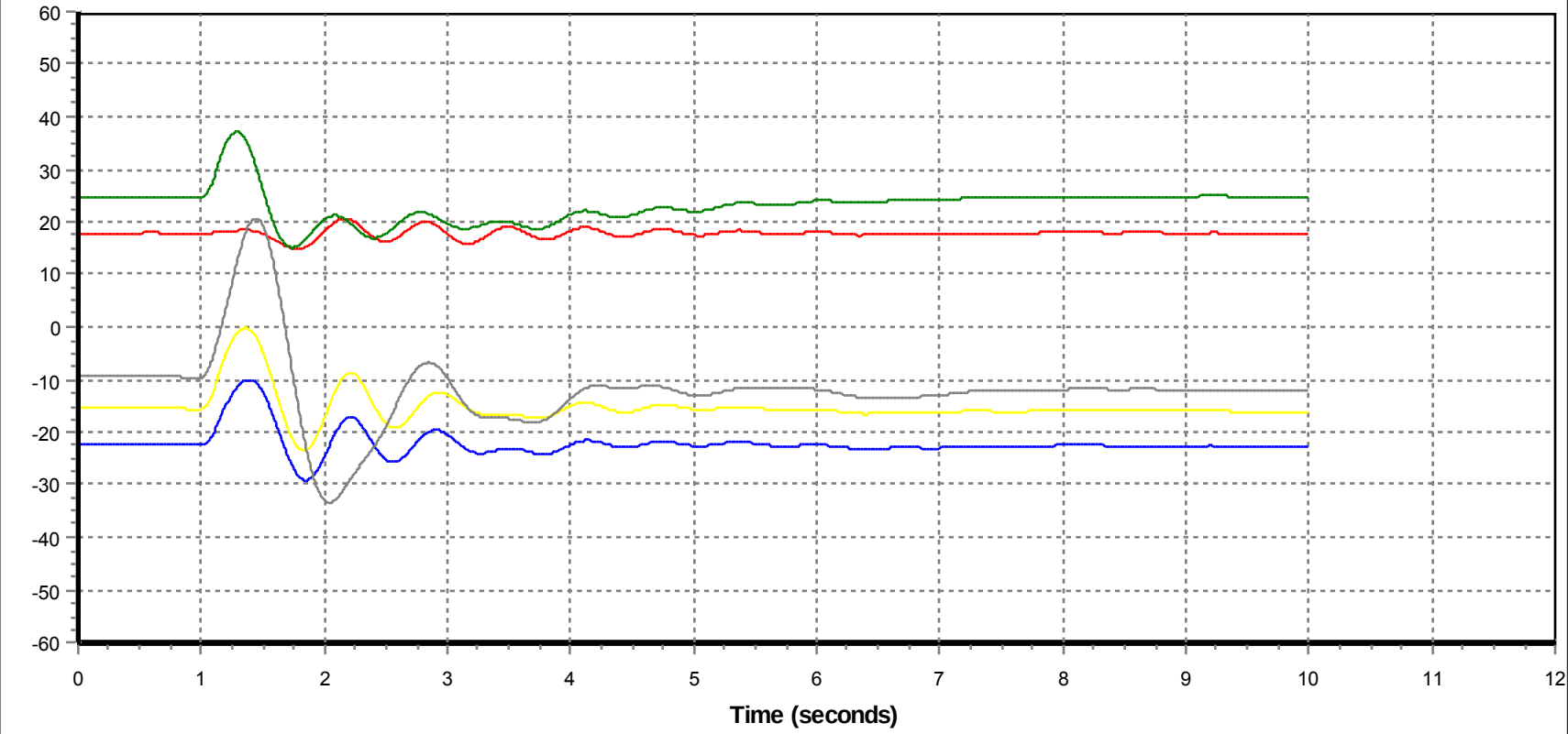

1 - ANGL 424[KEEP#2GN 19.000]2 : C503_3pfault_Joslyn_trip_9L76_09

2 - ANGL 18274[MACKAY2 18.000]1 : C503_3pfault_Joslyn_trip_9L76_09

3 - ANGL 3745[DOVERN 13.800]G1 : C503_3pfault_Joslyn_trip_9L76_09

4 - ANGL 19669[MRCP 13.800]1 : C503_3pfault_Joslyn_trip_9L76_09

5 - ANGL 10236[MUSKEG4 13.800]1 : C503_3pfault_Joslyn_trip_9L76_09

Machine Power

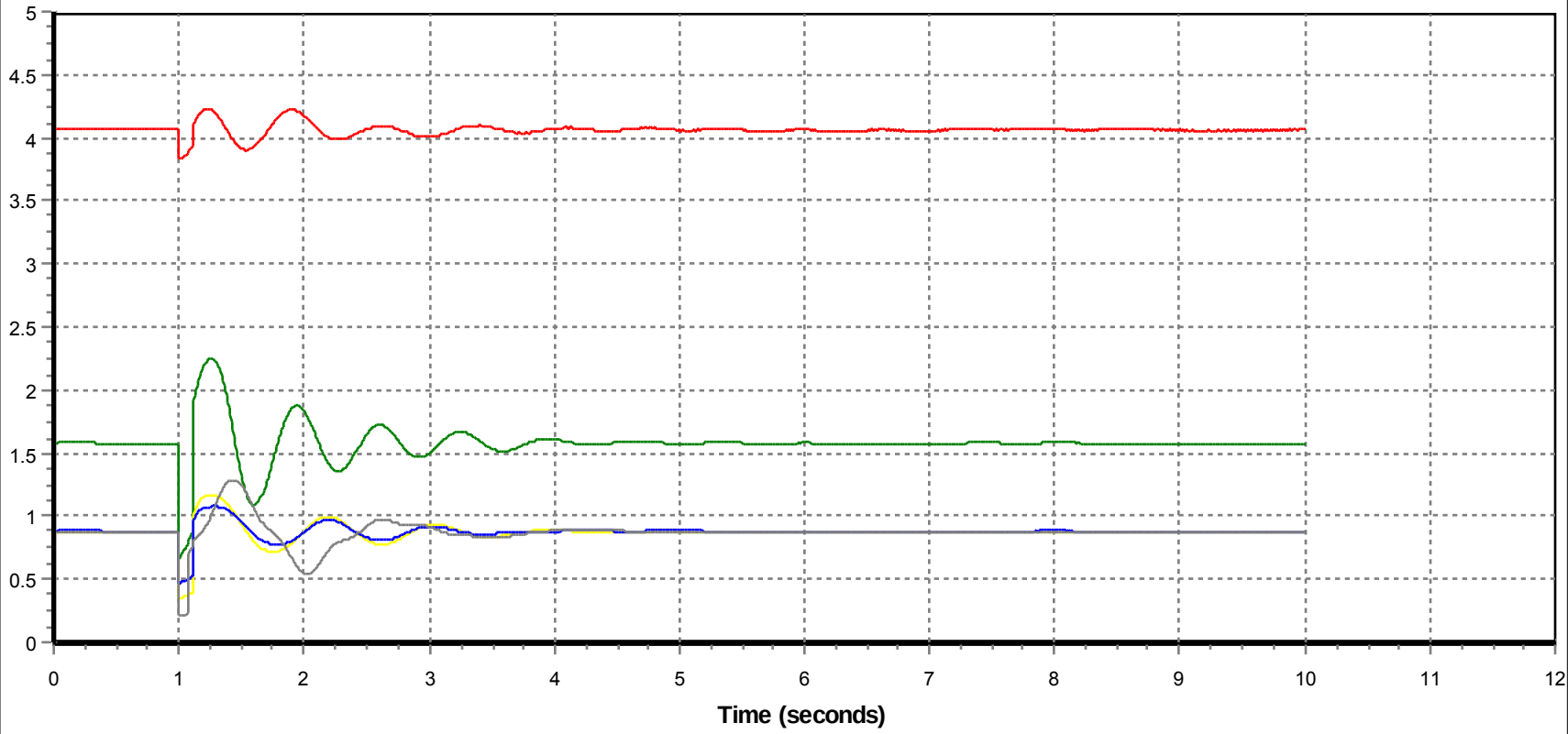

6 - POWR 424[KEEP#2GN 19.000]2 : C503_3pfault_Joslyn_trip_9L76_09

7 - POWR 18274[MACKAY2 18.000]1 : C503_3pfault_Joslyn_trip_9L76_09

8 - POWR 3745[DOVERN 13.800]G1 : C503_3pfault_Joslyn_trip_9L76_09

9 - POWR 19669[MRCP 13.800]1 : C503_3pfault_Joslyn_trip_9L76_09

10 - POWR 10236[MUSKEG4 13.800]1 : C503_3pfault_Joslyn_trip_9L76_09

Frequence Deviation

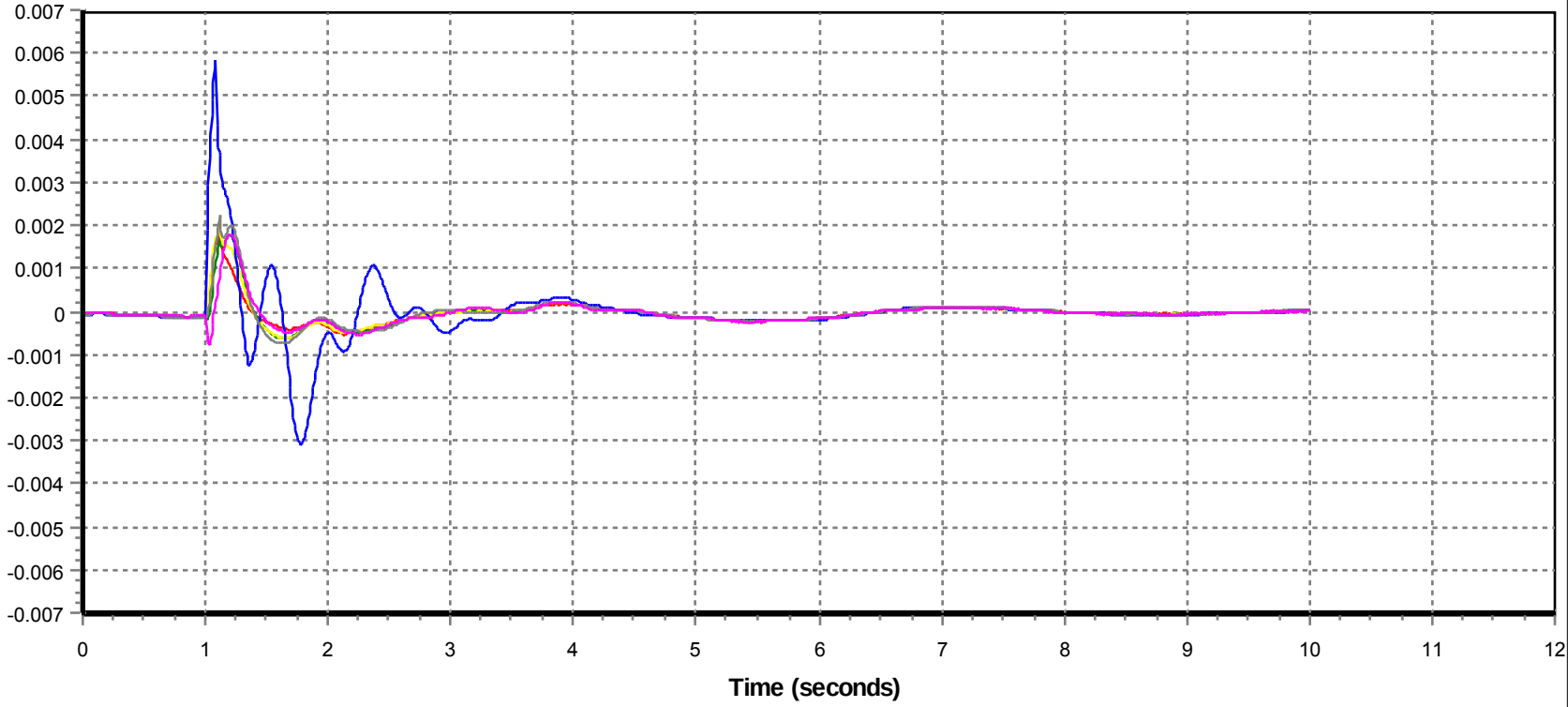

11 - FREQ 1601 [THICKWD1 500.00] : C503_3pfault_Joslyn_trip_9L76_09

12 - FREQ 1670 [BIRCHWOOD 240.00] : C503_3pfault_Joslyn_trip_9L76_09

13 - FREQ 666 [DOVER 240.00] : C503_3pfault_Joslyn_trip_9L76_09

14 - FREQ 1263 [JOSLYN4 240.00] : C503_3pfault_Joslyn_trip_9L76_09

15 - FREQ 98503 [ELLSR 240.00] : C503_3pfault_Joslyn_trip_9L76_09

16 - FREQ 1288 [LIVOCK01 240.00] : C503_3pfault_Joslyn_trip_9L76_09

Voltage

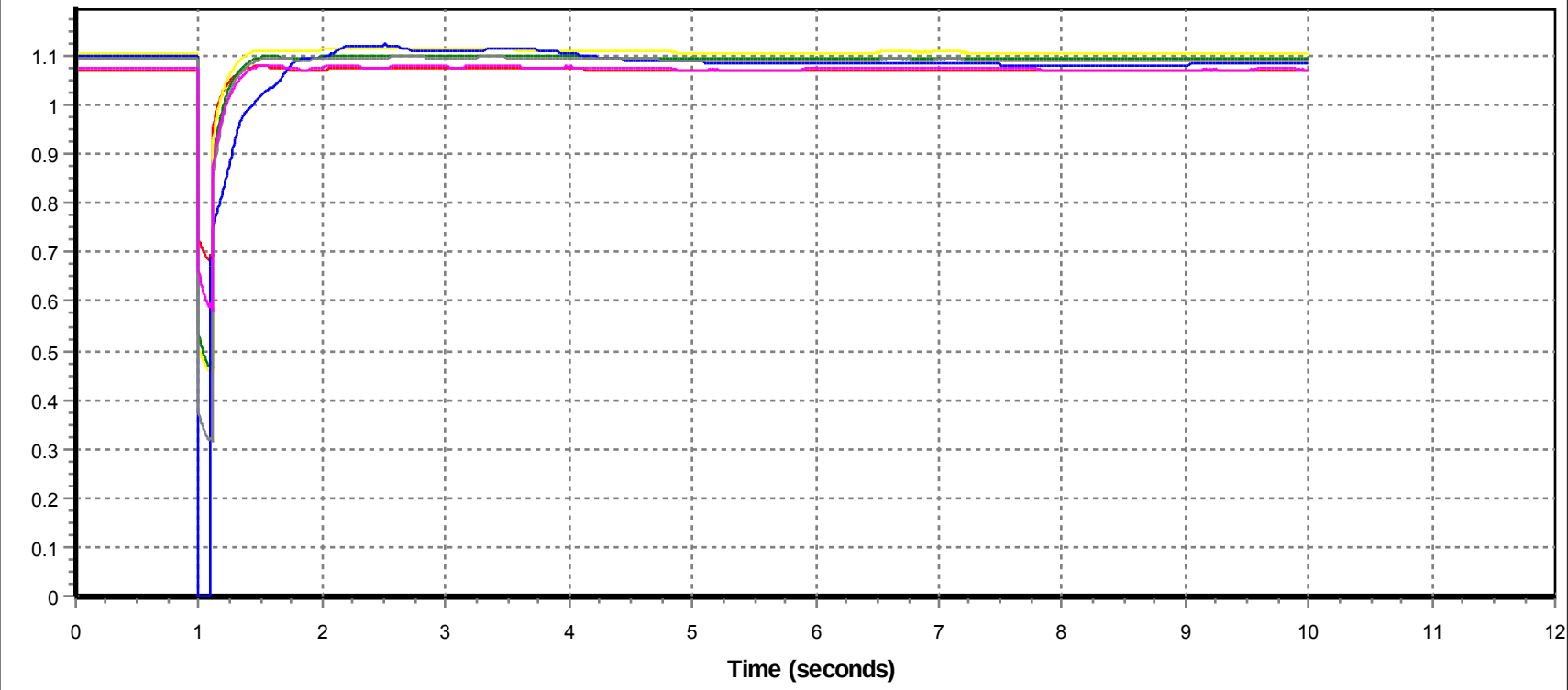

17 - VOLT 1601 [THICKWD1 500.00] : C503_3pfault_Joslyn_trip_9L76_09

18 - VOLT 1670 [BIRCHWOOD 240.00] : C503_3pfault_Joslyn_trip_9L76_09

19 - VOLT 666 [DOVER 240.00] : C503_3pfault_Joslyn_trip_9L76_09

20 - VOLT 1263 [JOSLYN4 240.00] : C503_3pfault_Joslyn_trip_9L76_09

21 - VOLT 98503 [ELLSR 240.00] : C503_3pfault_Joslyn_trip_9L76_09

22 - VOLT 1288 [LIVOCK01 240.00] : C503_3pfault_Joslyn_trip_9L76_09

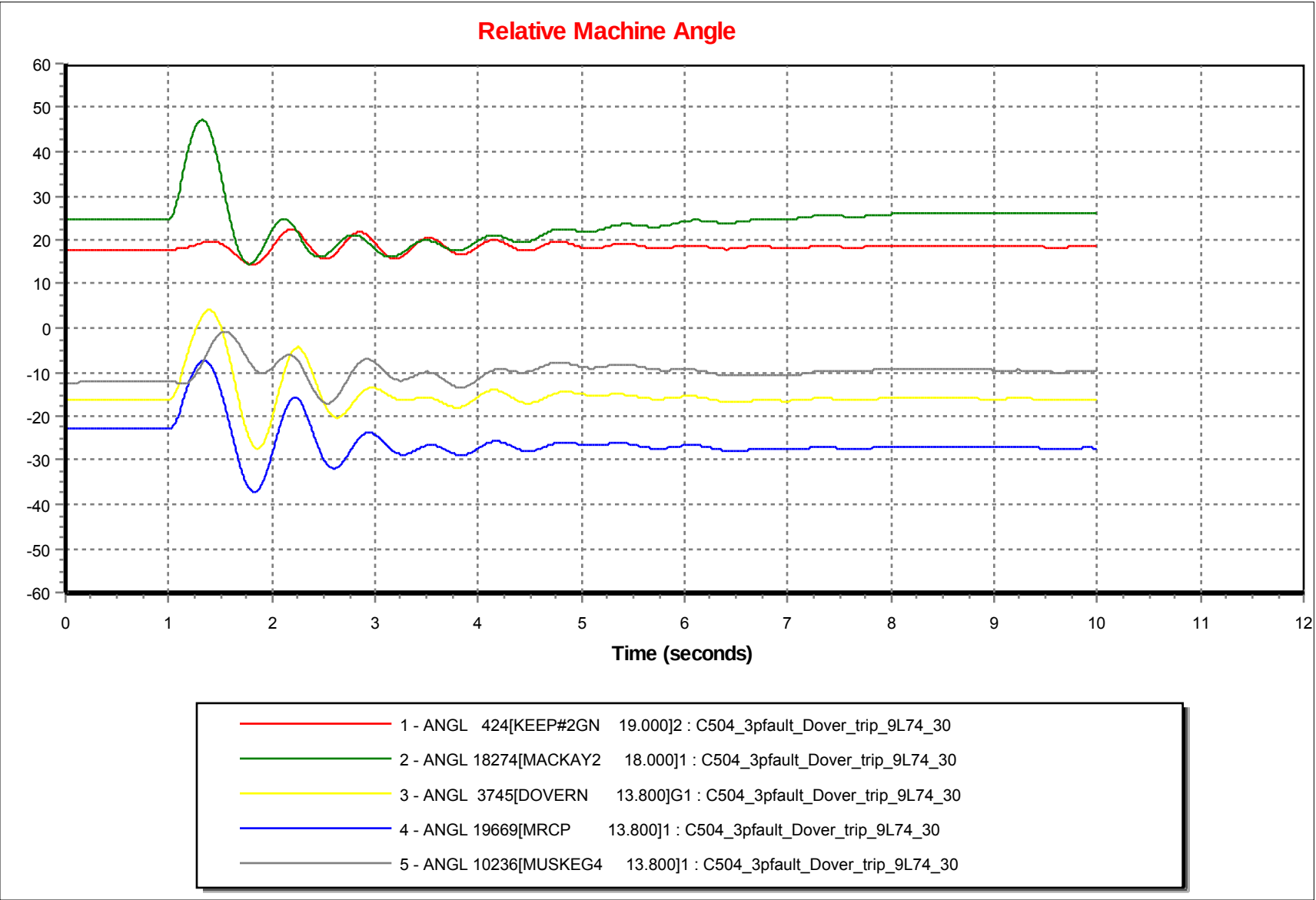
Relative Machine Angle
60
50
40
30
20
10
0
-10
-20
-30
-40
-50
-60
0
1
2
3
4
5
6
7
8
9
10
11
12
Time (seconds)
1 - ANGL 424[KEEP#2GN 19.000]2 : C504_3pfault_Dover_trip_9L74_30
2 - ANGL 18274[MACKAY2 18.000]1 : C504_3pfault_Dover_trip_9L74_30
3 - ANGL 3745[DOVERN 13.800]G1 : C504_3pfault_Dover_trip_9L74_30
4 - ANGL 19669[MRCP 13.800]1 : C504_3pfault_Dover_trip_9L74_30
5 - ANGL 10236[MUSKEG4 13.800]1 : C504_3pfault_Dover_trip_9L74_30

Machine Power

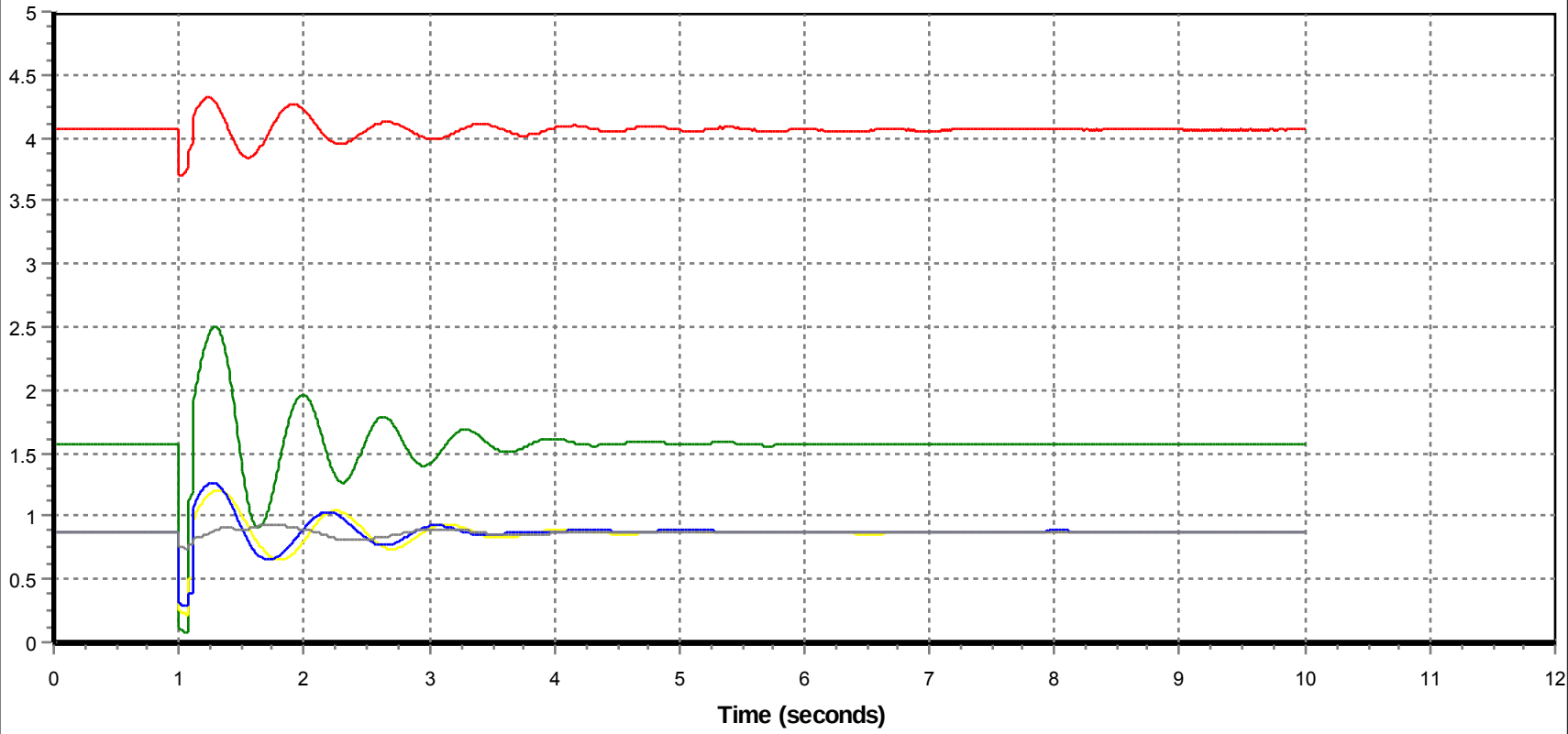

6 - POWR 424[KEEP#2GN 19.000]2 : C504_3pfault_Dover_trip_9L74_30

7 - POWR 18274[MACKAY2 18.000]1 : C504_3pfault_Dover_trip_9L74_30

8 - POWR 3745[DOVERN 13.800]G1 : C504_3pfault_Dover_trip_9L74_30

9 - POWR 19669[MRCP 13.800]1 : C504_3pfault_Dover_trip_9L74_30

10 - POWR 10236[MUSKEG4 13.800]1 : C504_3pfault_Dover_trip_9L74_30

Frequence Deviation

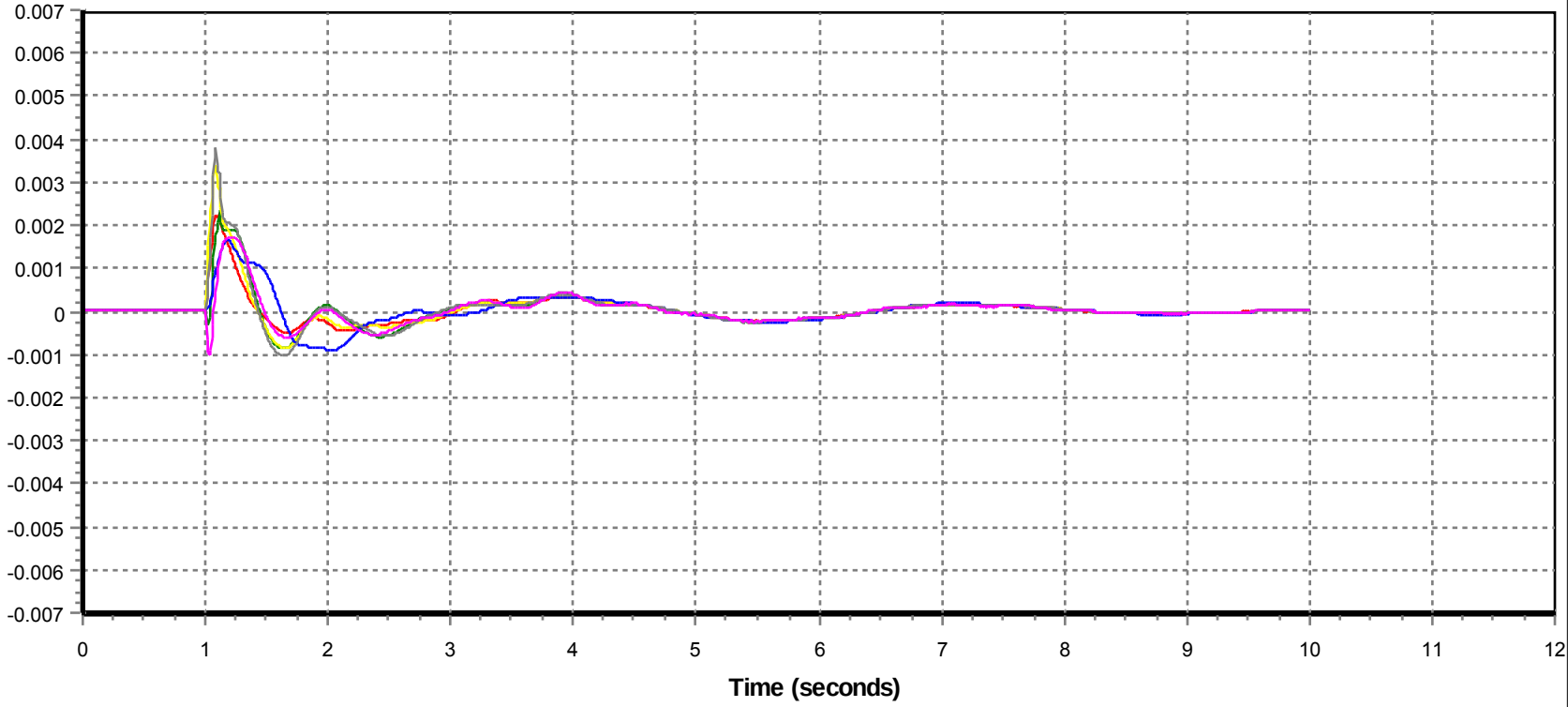

11 - FREQ 1601 [THICKWD1 500.00] : C504_3pfault_Dover_trip_9L74_30

12 - FREQ 1670 [BIRCHWOOD 240.00] : C504_3pfault_Dover_trip_9L74_30

13 - FREQ 666 [DOVER 240.00] : C504_3pfault_Dover_trip_9L74_30

14 - FREQ 1263 [JOSLYN4 240.00] : C504_3pfault_Dover_trip_9L74_30

15 - FREQ 98503 [ELLSR 240.00] : C504_3pfault_Dover_trip_9L74_30

16 - FREQ 1288 [LIVOCK01 240.00] : C504_3pfault_Dover_trip_9L74_30

Voltage

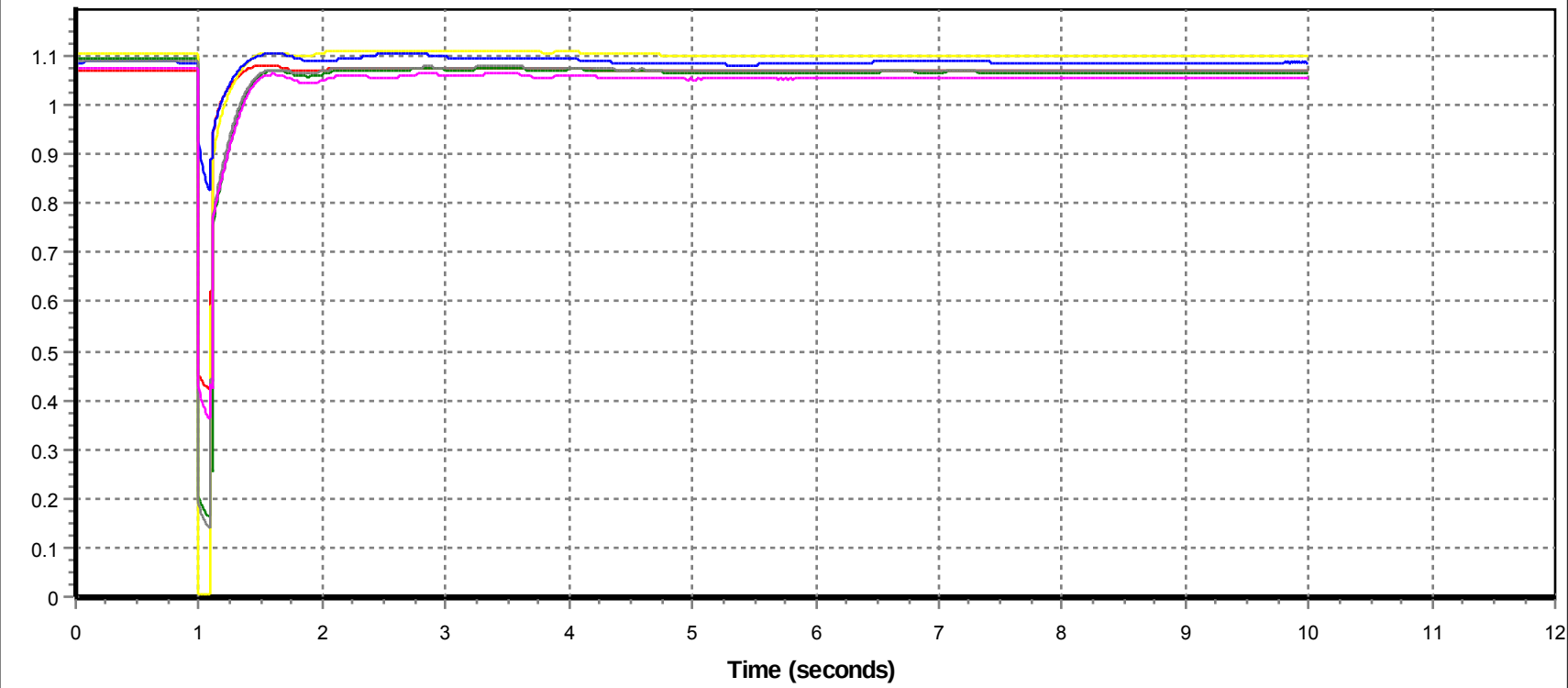

17 - VOLT 1601 [THICKWD1 500.00] : C504_3pfault_Dover_trip_9L74_30

18 - VOLT 1670 [BIRCHWOOD 240.00] : C504_3pfault_Dover_trip_9L74_30

19 - VOLT 666 [DOVER 240.00] : C504_3pfault_Dover_trip_9L74_30

20 - VOLT 1263 [JOSLYN4 240.00] : C504_3pfault_Dover_trip_9L74_30

21 - VOLT 98503 [ELLSR 240.00] : C504_3pfault_Dover_trip_9L74_30

22 - VOLT 1288 [LIVOCK01 240.00] : C504_3pfault_Dover_trip_9L74_30

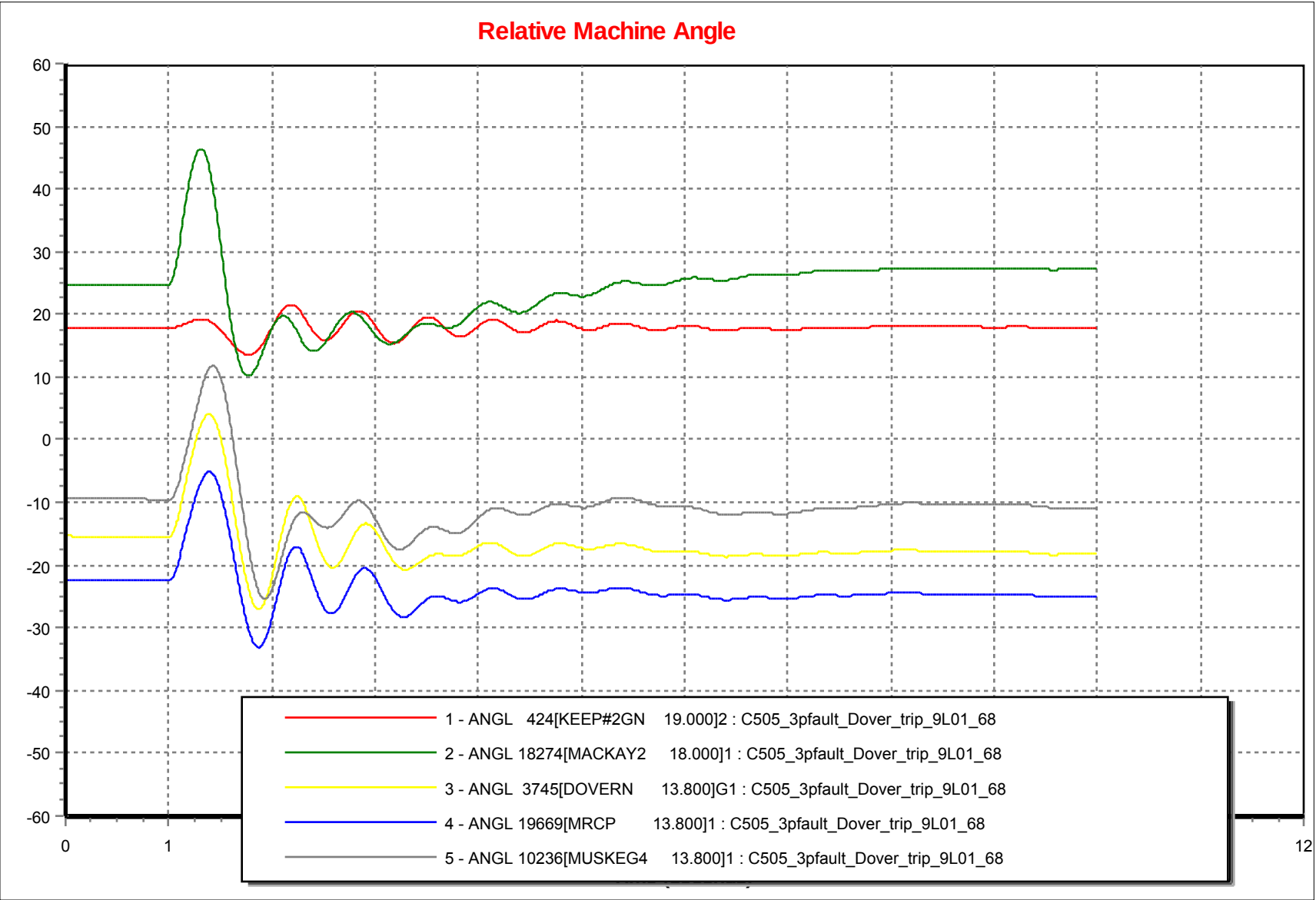
Relative Machine Angle
60
50
40
30
20
10
0
-10
-20
-30
-40
-50
-60
0
1
12
1 - ANGL 424[KEEP#2GN 19.000]2 : C505_3pfault_Dover_trip_9L01_68
2 - ANGL 18274[MACKAY2 18.000]1 : C505_3pfault_Dover_trip_9L01_68
3 - ANGL 3745[DOVERN 13.800]G1 : C505_3pfault_Dover_trip_9L01_68
4 - ANGL 19669[MRCP 13.800]1 : C505_3pfault_Dover_trip_9L01_68
5 - ANGL 10236[MUSKEG4 13.800]1 : C505_3pfault_Dover_trip_9L01_68

Machine Power

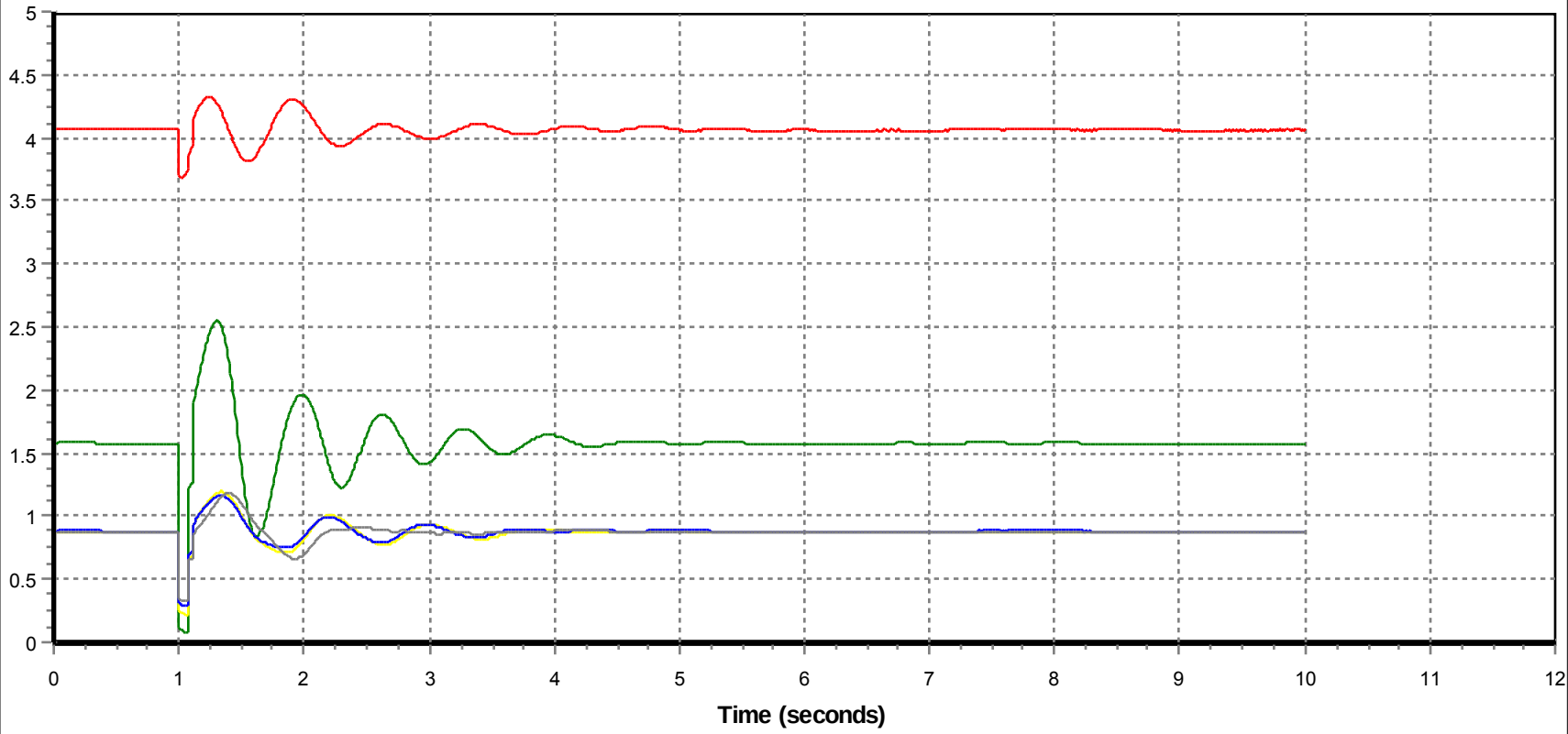

6 - POWR 424[KEEP#2GN 19.000]2 : C505_3pfault_Dover_trip_9L01_68

7 - POWR 18274[MACKAY2 18.000]1 : C505_3pfault_Dover_trip_9L01_68

8 - POWR 3745[DOVERN 13.800]G1 : C505_3pfault_Dover_trip_9L01_68

9 - POWR 19669[MRCP 13.800]1 : C505_3pfault_Dover_trip_9L01_68

10 - POWR 10236[MUSKEG4 13.800]1 : C505_3pfault_Dover_trip_9L01_68

Frequence Deviation

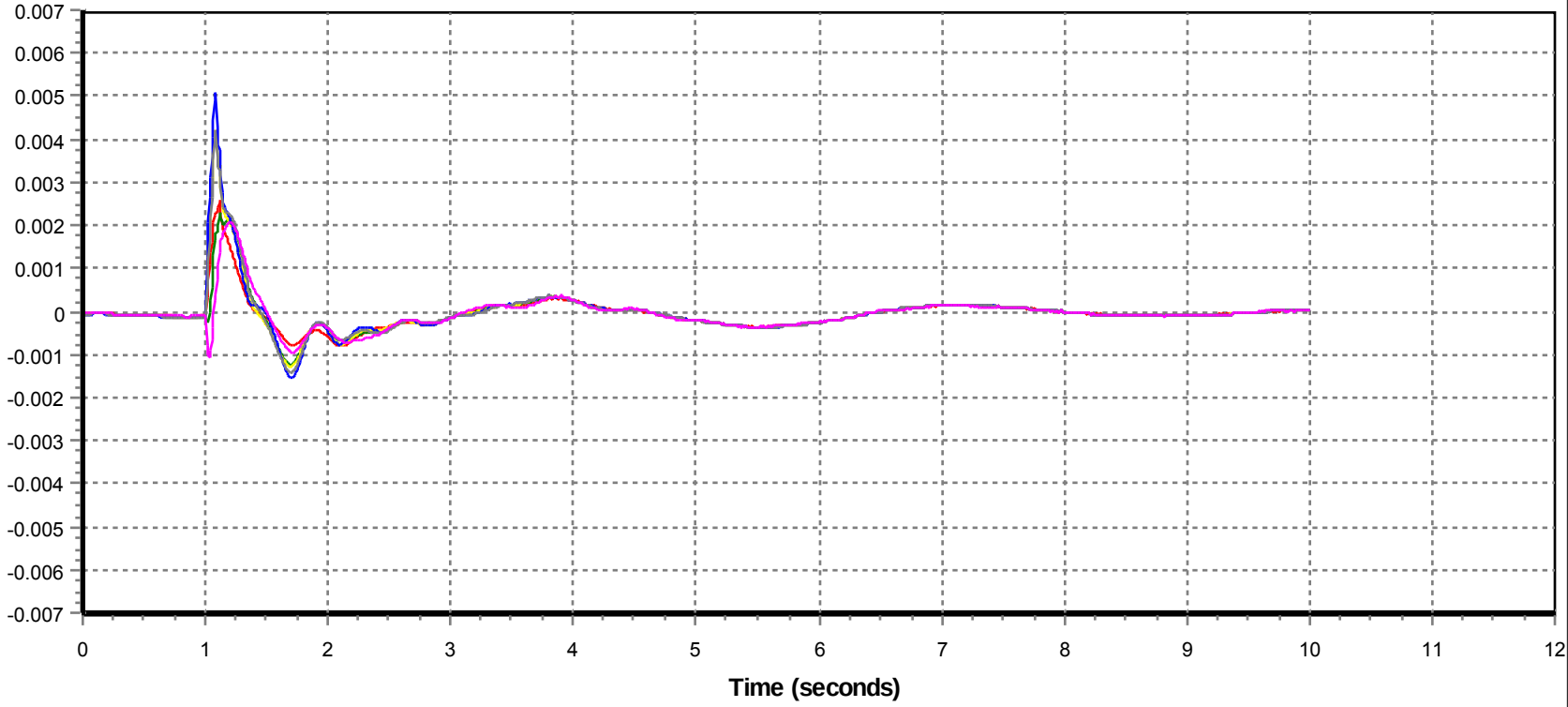

11 - FREQ 1601 [THICKWD1 500.00] : C505_3pfault_Dover_trip_9L01_68

12 - FREQ 1670 [BIRCHWOOD 240.00] : C505_3pfault_Dover_trip_9L01_68

13 - FREQ 666 [DOVER 240.00] : C505_3pfault_Dover_trip_9L01_68

14 - FREQ 1263 [JOSLYN4 240.00] : C505_3pfault_Dover_trip_9L01_68

15 - FREQ 98503 [ELLSR 240.00] : C505_3pfault_Dover_trip_9L01_68

16 - FREQ 1288 [LIVOCK01 240.00] : C505_3pfault_Dover_trip_9L01_68

Voltage

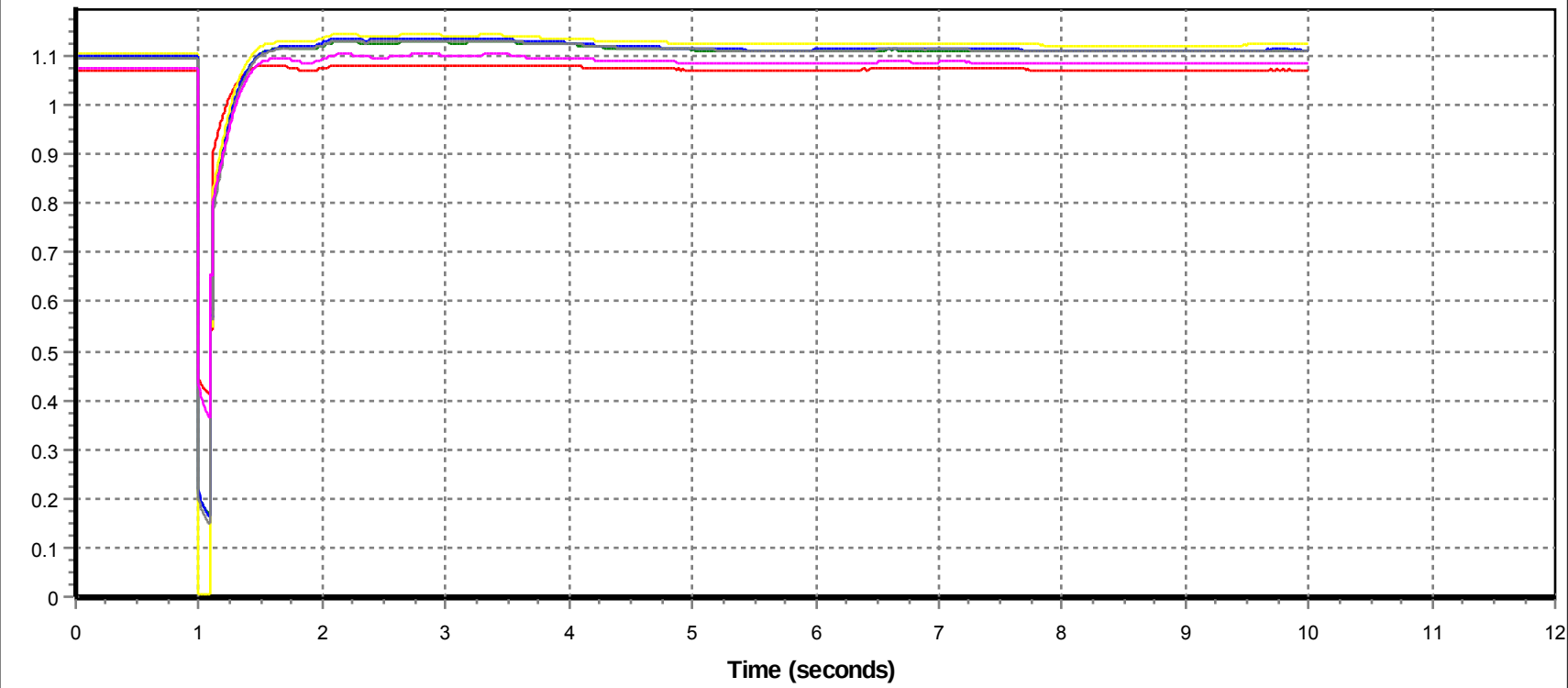

17 - VOLT 1601 [THICKWD1 500.00] : C505_3pfault_Dover_trip_9L01_68

18 - VOLT 1670 [BIRCHWOOD 240.00] : C505_3pfault_Dover_trip_9L01_68

19 - VOLT 666 [DOVER 240.00] : C505_3pfault_Dover_trip_9L01_68

20 - VOLT 1263 [JOSLYN4 240.00] : C505_3pfault_Dover_trip_9L01_68

21 - VOLT 98503 [ELLSR 240.00] : C505_3pfault_Dover_trip_9L01_68

22 - VOLT 1288 [LIVOCK01 240.00] : C505_3pfault_Dover_trip_9L01_68

Category C8 Fault Analysis

Category C8 fault analysis was performed for 2020 winter peak case with NW FMM development. Category C8 faults are defined as single line-to-ground faults of transmission lines with delayed clearing time (stuck breaker condition). Category C8 fault analysis was performed for Dover 888S, Birchwood 960S, Ells River 2079S and Joslyn 849S. These four substations are 240 kV switching substations with breaker-and-a half configurations. For each substation, the fault location was assumed to be on the 240 kV line. This fault location was then simulated for with a stuck breaker at the near end substation as the worst case condition. For breaker-and-a half substation configurations, middle breaker stuck of each diameter was considered as the worst case scenario because it will cause another line on the same diameter trip with delay clearing time. 13 cycles was used for delay clearing time in this study.

Figure J-1 to Figure J-5 show substation configuration where the Category C8 faults were applied. Each of the stuck breaker conditions considered are labeled with a breaker number in the figure. Table J-4 summarizes the fault descriptions and results for the Category C8 faults. Specific transient simulation plots for Category C8 contingencies can be found in this appendix.

TABLE J-4

STABILITY RESULTS FOR CATEGORY C8 FAULTS

Case ID	Description	Stuck Breaker#	Observations
C701	Single line fault at Dover on 240kV 9L74 to Birchwood 7 cycles: trip bkr on 9L74 at Birchwood 13 cycles: trip 9L09 to Joslyn Clear fault.	S1	System stable Good voltage recovery
C702	Single line fault at Dover on 240kV 9L68 to Thickwood 7 cycles: trip bkr on 9L68 at Thichwood 13 cycles: trip 9L43 to Mackay River Clear fault.	S2	System stable Good voltage recovery
C703	Single line fault at Dover on 240kV 9L30 to Thickwood 7 cycles: trip bkr on 9L30 at Thichwood 13 cycles: trip 9L01 to Ruth Lake Clear fault.	S3	System stable Good voltage recovery
C704	Single line fault at Birchwood on 240kV 9L95 to Ells River 7 cycles: trip bkr on 9L95 at Ellls River 13 cycles: trip 9L57 to Livock Clear fault.	S4	System stable Good voltage recovery
C705	Single line fault at Ellls River on 240kV 9L95 to Ells River 7 cycles: trip bkr on 9L95 at Birchwood 13 cycles: trip 9L76 to Joslyn Clear fault.	S5	System stable Good voltage recovery
C706	Single line fault at Ellls River on 240kV 9L08 to Dover 7 cycles: trip bkr on 9L08 at Dover 13 cycles: trip 9L114 to Dover North Clear fault.	S6	System stable Good voltage recovery
C707	Single line fault at Joslyn on 240kV 9L76 to Ells River 7 cycles: trip bkr on 9L76 at Ells River 13 cycles: trip 9L32 to Bitumount Clear fault.	S7	System stable Good voltage recovery
C708	Single line fault at Joslyn on 240kV 9L09 to Dover 7 cycles: trip bkr on 9L09 at Dover 13 cycles: trip 9L66 to Muskeg River Clear fault.	S8	System stable Good voltage recovery
C709	Single line fault at Thickwood on 240kV 9L30 to Dover 7 cycles: trip bkr on 9L30 at Dover 13 cycles: trip 500 Kv to Gennessee Clear fault.	S9	System stable Good voltage recovery

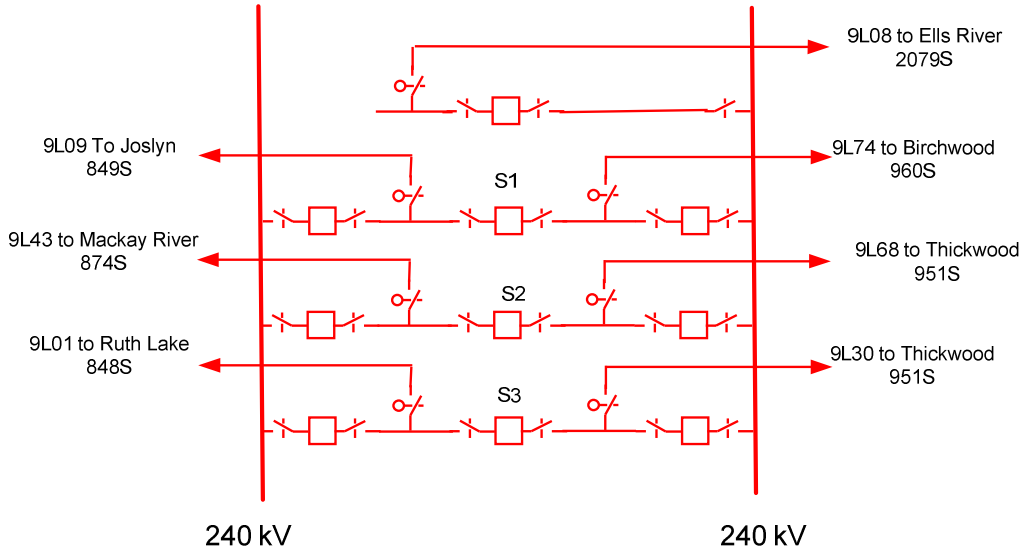

Circuit Breaker

Ganged Air-switch (Manual Operation)

Ganged Air-switch (Motor Operated)

aeso

Single Line Diagram
Dover 888S
NW FMM 240 kV Area Development

2011-07-30

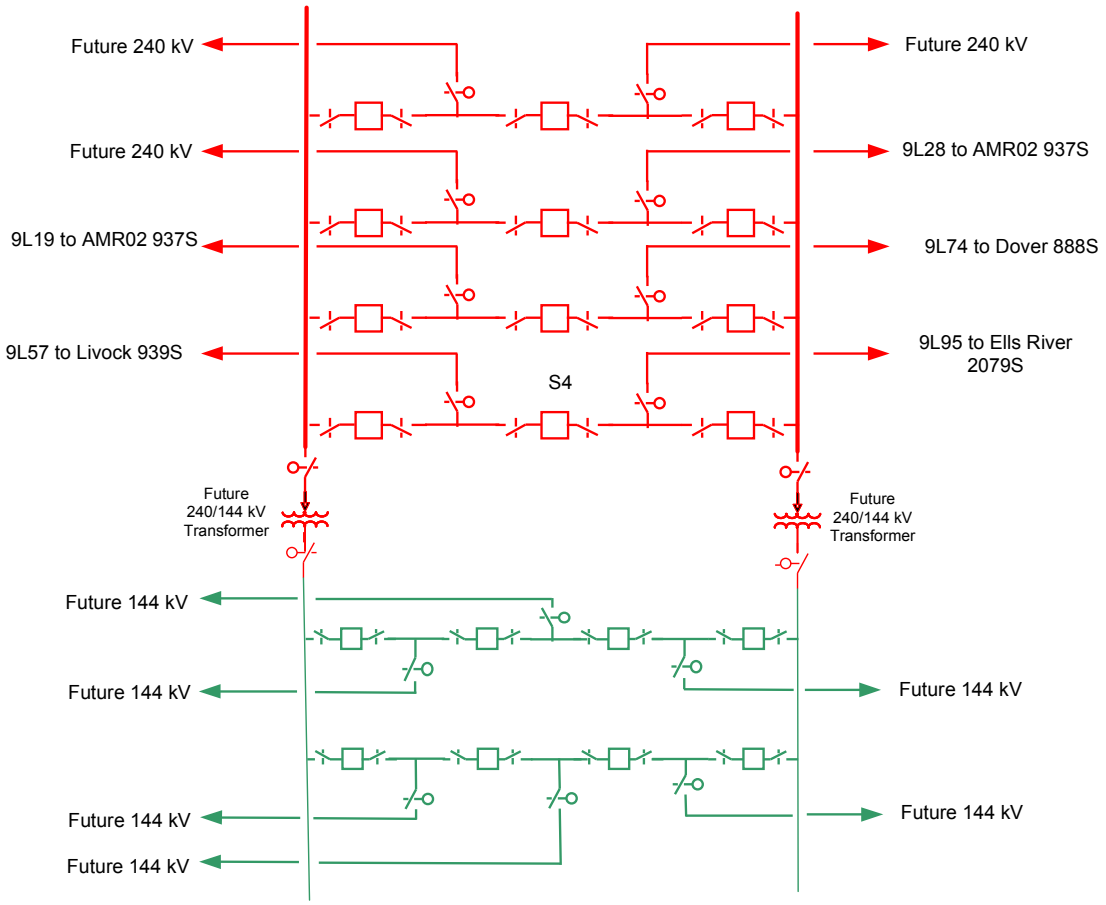

Circuit Breaker

Ganged Air-switch (Manual Operation)

Ganged Air-switch (Motor Operated)

Transformer (Load Tapchanger)

aeso

Single Line Diagram
Birchwood 960S
NW FMM 240 kV Area Development

2011-07-30

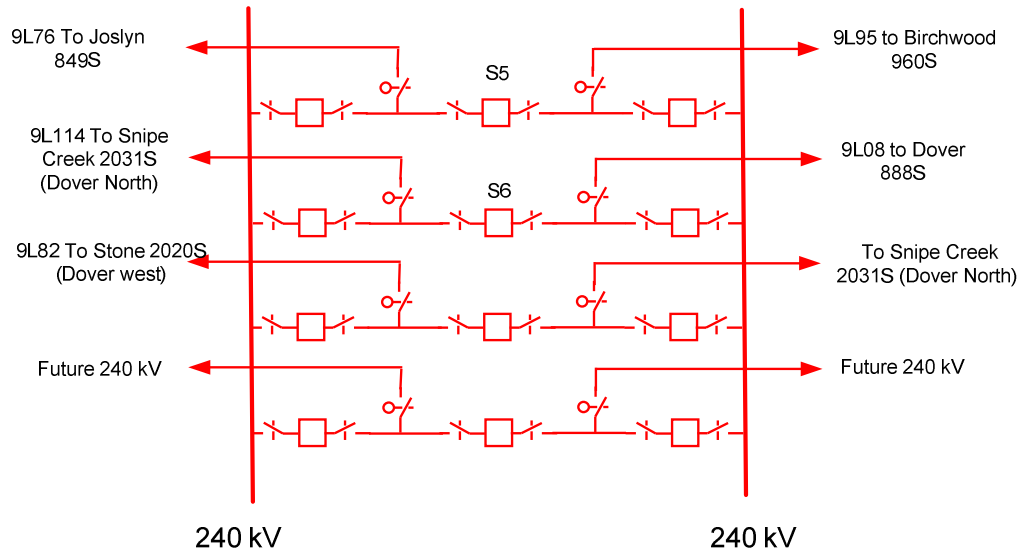

Circuit Breaker

Ganged Air-switch
(Manual Operation)

Ganged Air-switch
(Motor Operated)

aeso

Single Line Diagram
Ells River 2079S
NW FMM 240 kV Area
Development

2011-07-30

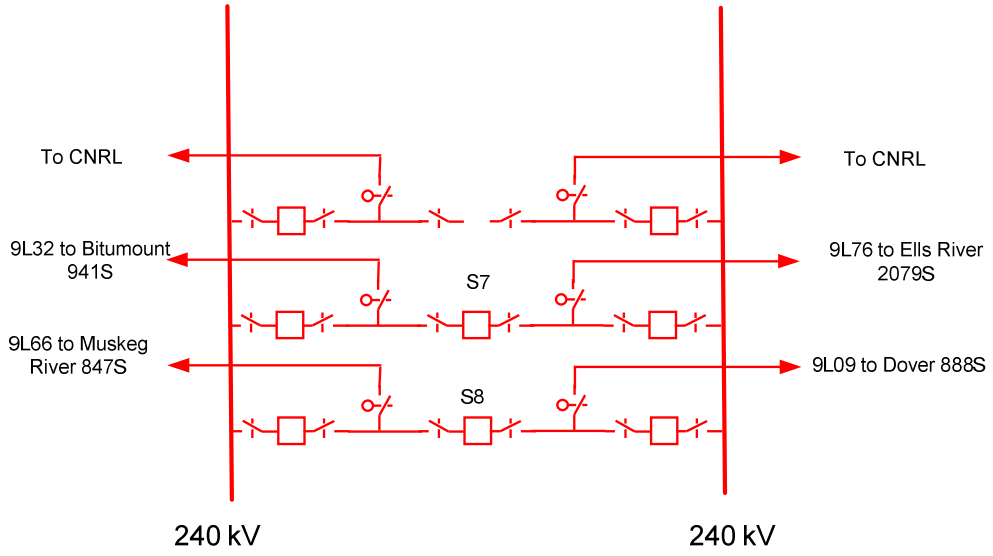

Circuit Breaker

Ganged Air-switch (Manual Operation)

Ganged Air-switch (Motor Operated)

aeso

Single Line Diagram
Dover 888S
NW FMM 240 kV Area Development

2011-07-30

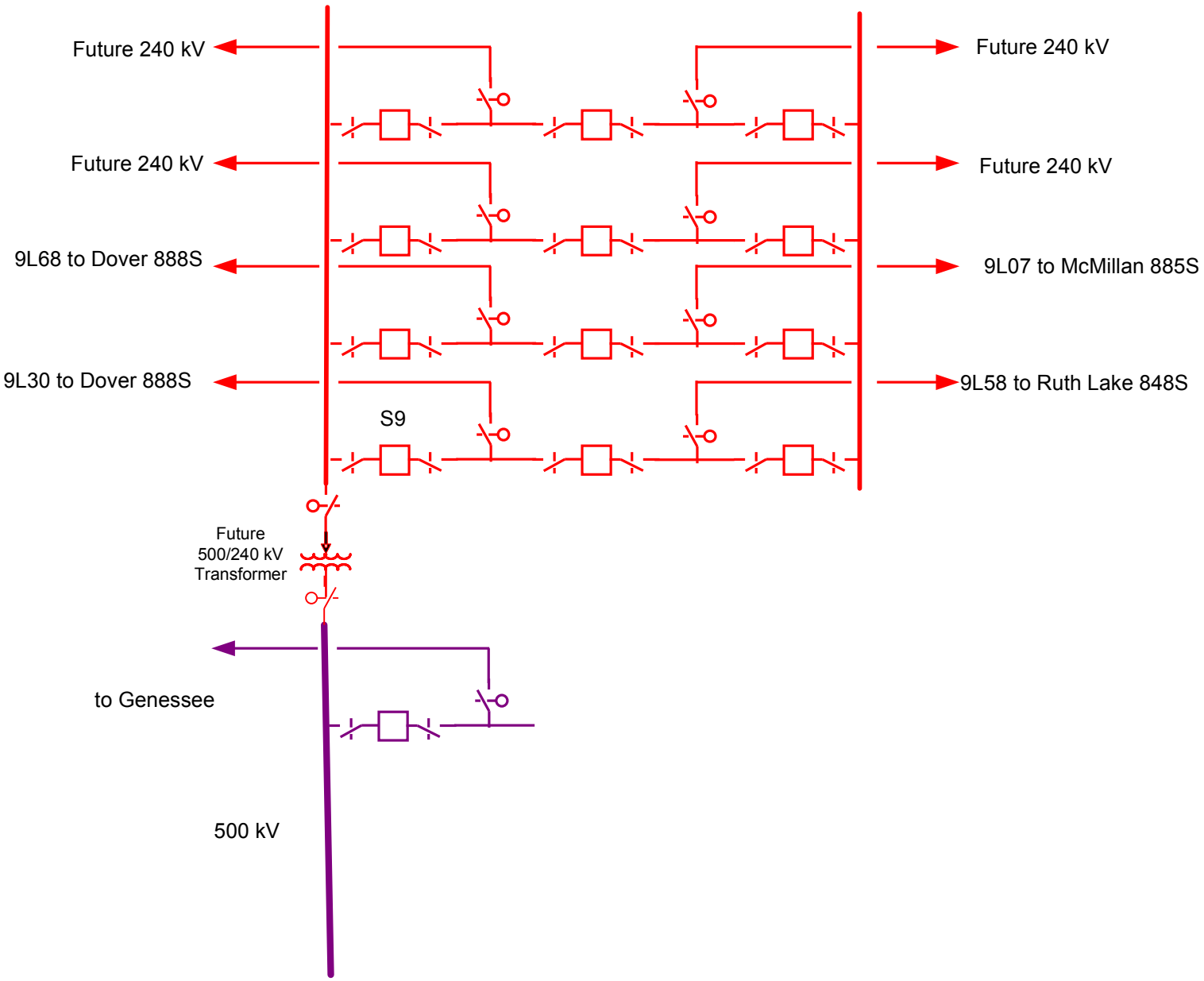

Circuit Breaker

Ganged Air-switch
(Manual Operation)

Ganged Air-switch
(Motor Operated)

Transformer
(Load Tapchanger)

aeso

Single Line Diagram
Thichwood 951S
NW FMM 240 kV Area
Development

2011-07-30

Relative Machine Angle

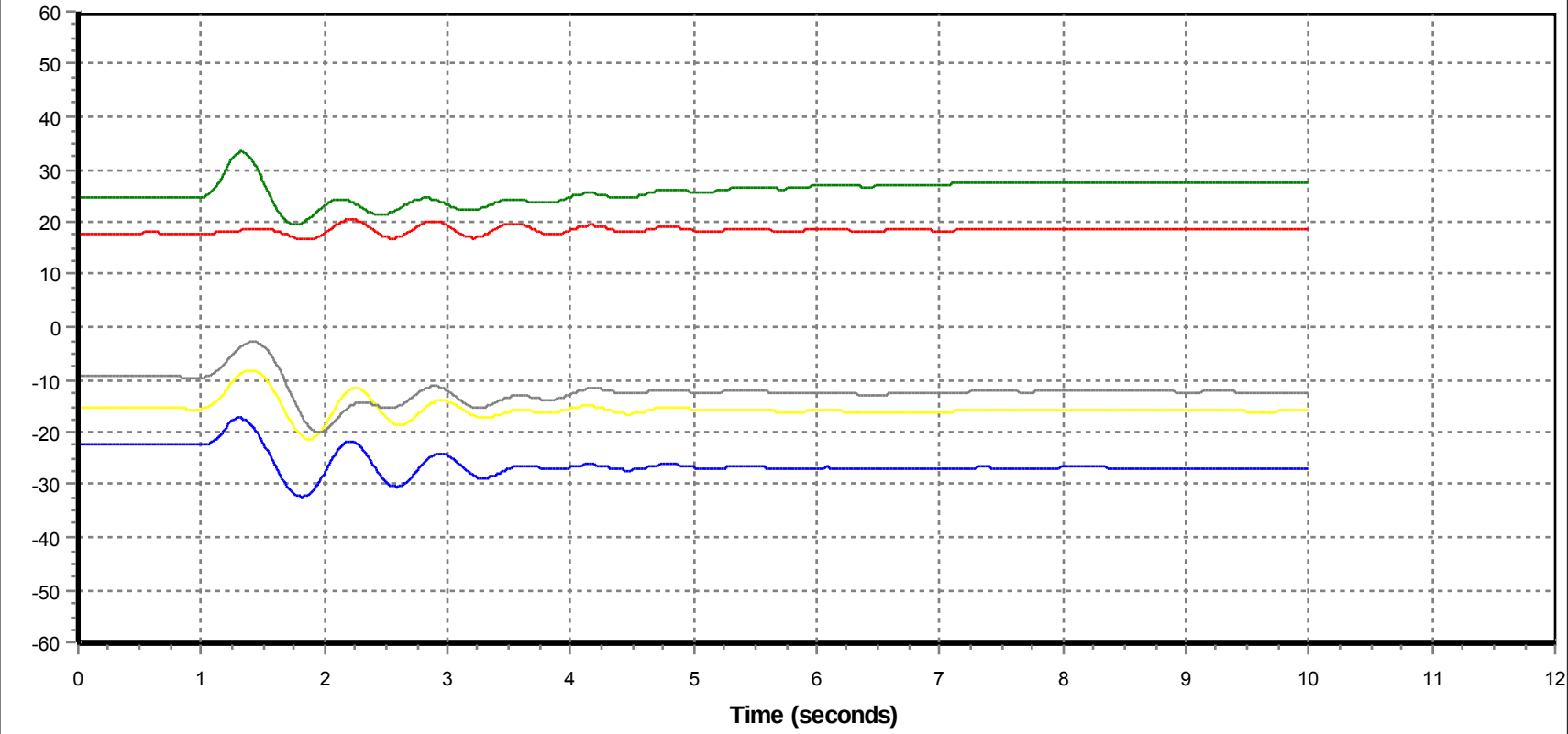

1 - ANGL 424[KEEP#2GN 19.000]2 : C701_1pfault_Dover_trip_9L09_74

2 - ANGL 18274[MACKAY2 18.000]1 : C701_1pfault_Dover_trip_9L09_74

3 - ANGL 3745[DOVERN 13.800]G1 : C701_1pfault_Dover_trip_9L09_74

4 - ANGL 19669[MRCP 13.800]1 : C701_1pfault_Dover_trip_9L09_74

5 - ANGL 10236[MUSKEG4 13.800]1 : C701_1pfault_Dover_trip_9L09_74

Machine Power

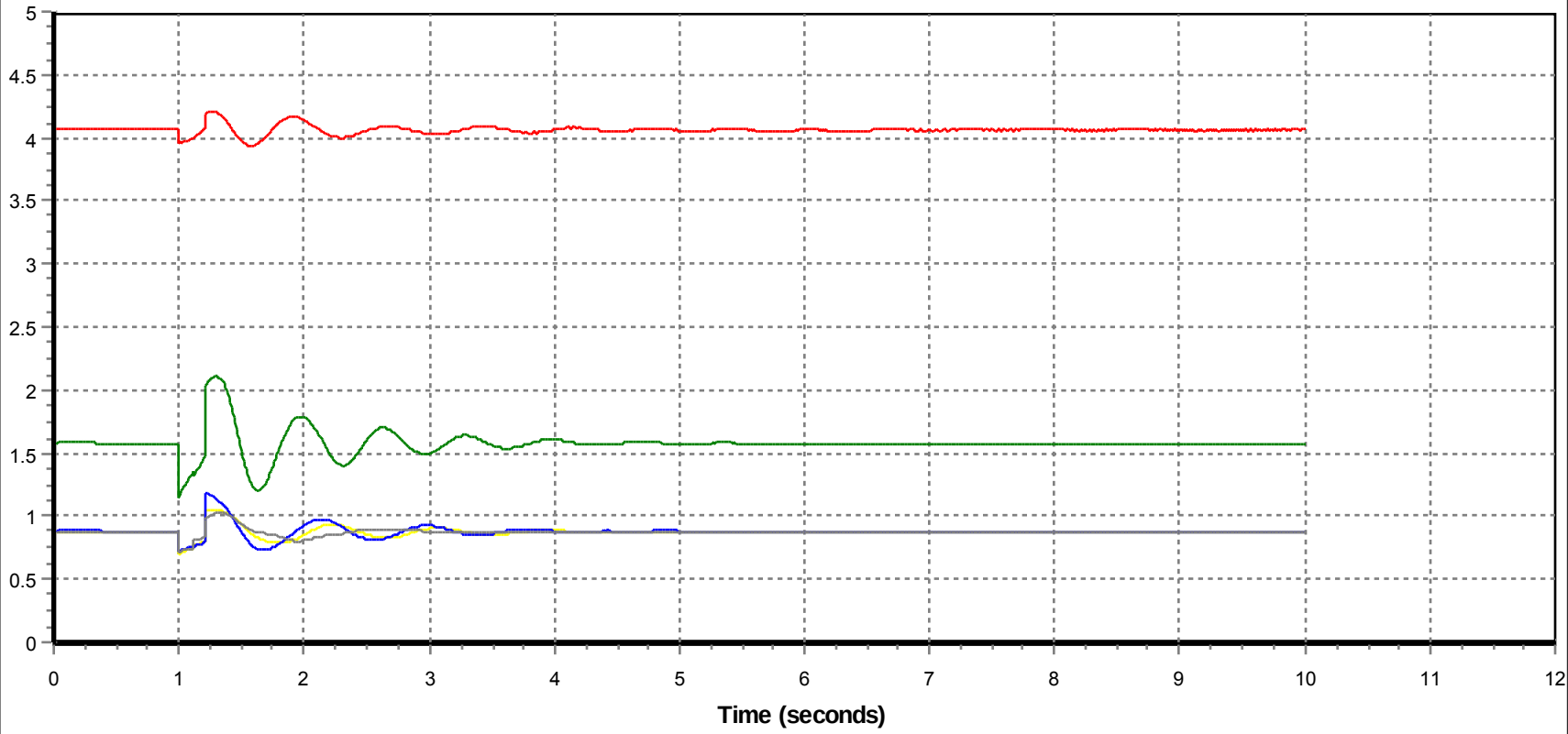

6 - POWR 424[KEEP#2GN 19.000]2 : C701_1pfault_Dover_trip_9L09_74

7 - POWR 18274[MACKAY2 18.000]1 : C701_1pfault_Dover_trip_9L09_74

8 - POWR 3745[DOVERN 13.800]G1 : C701_1pfault_Dover_trip_9L09_74

9 - POWR 19669[MRCP 13.800]1 : C701_1pfault_Dover_trip_9L09_74

10 - POWR 10236[MUSKEG4 13.800]1 : C701_1pfault_Dover_trip_9L09_74

Frequence Deviation

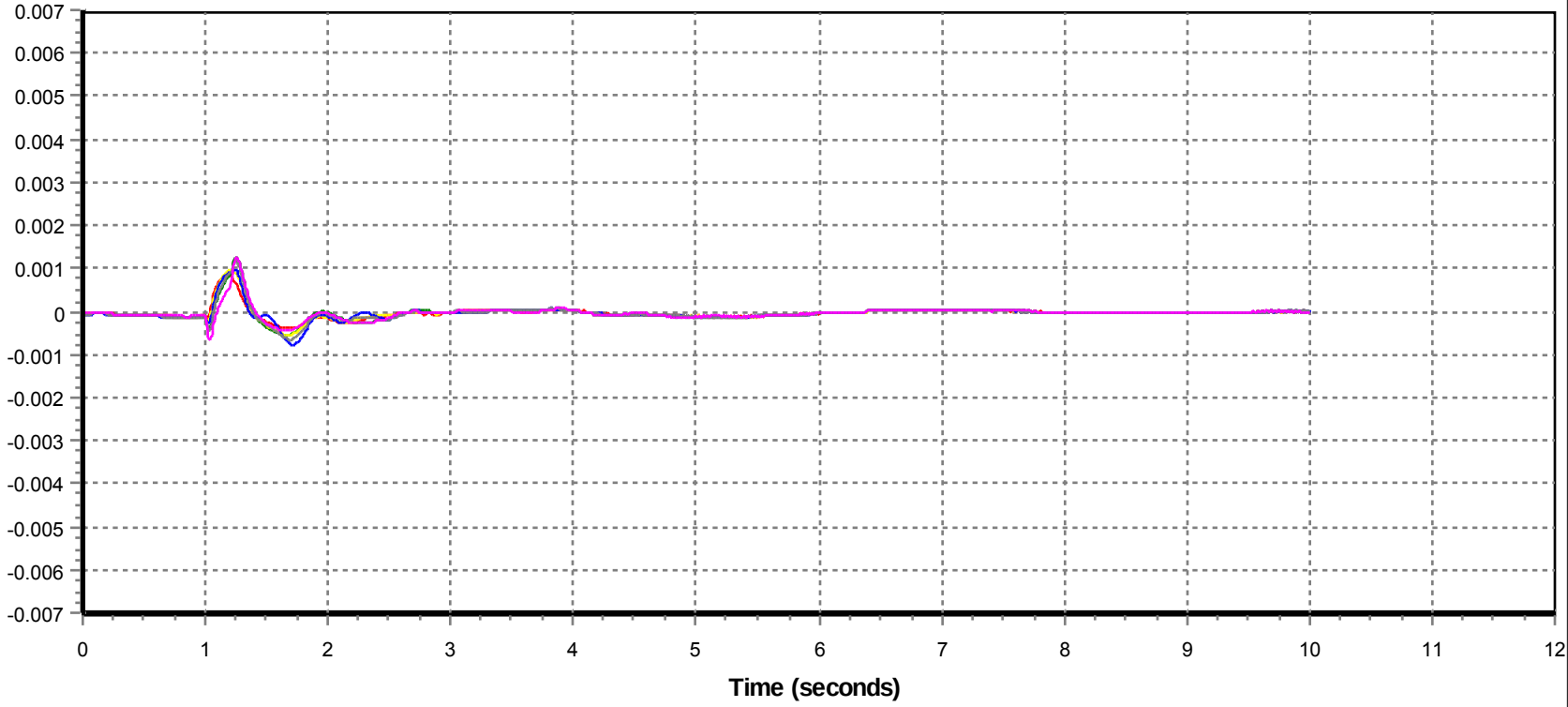

11 - FREQ 1601 [THICKWD1 500.00] : C701_1pfault_Dover_trip_9L09_74

12 - FREQ 1670 [BIRCHWOOD 240.00] : C701_1pfault_Dover_trip_9L09_74

13 - FREQ 666 [DOVER 240.00] : C701_1pfault_Dover_trip_9L09_74

14 - FREQ 1263 [JOSLYN4 240.00] : C701_1pfault_Dover_trip_9L09_74

15 - FREQ 98503 [ELLSR 240.00] : C701_1pfault_Dover_trip_9L09_74

16 - FREQ 1288 [LIVOCK01 240.00] : C701_1pfault_Dover_trip_9L09_74

Voltage

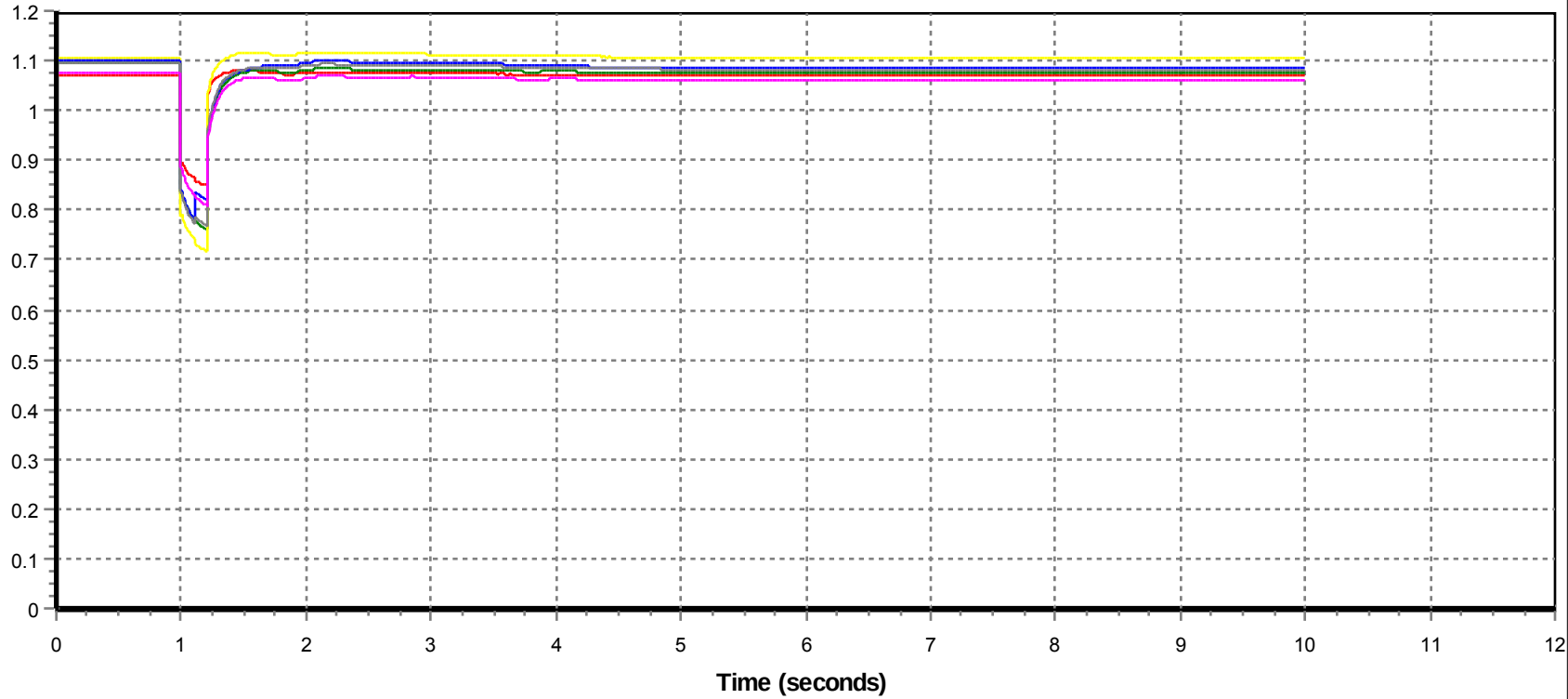

17 - VOLT 1601 [THICKWD1 500.00] : C701_1pfault_Dover_trip_9L09_74

18 - VOLT 1670 [BIRCHWOOD 240.00] : C701_1pfault_Dover_trip_9L09_74

19 - VOLT 666 [DOVER 240.00] : C701_1pfault_Dover_trip_9L09_74

20 - VOLT 1263 [JOSLYN4 240.00] : C701_1pfault_Dover_trip_9L09_74

21 - VOLT 98503 [ELLSR 240.00] : C701_1pfault_Dover_trip_9L09_74

22 - VOLT 1288 [LIVOCK01 240.00] : C701_1pfault_Dover_trip_9L09_74

Relative Machine Angle

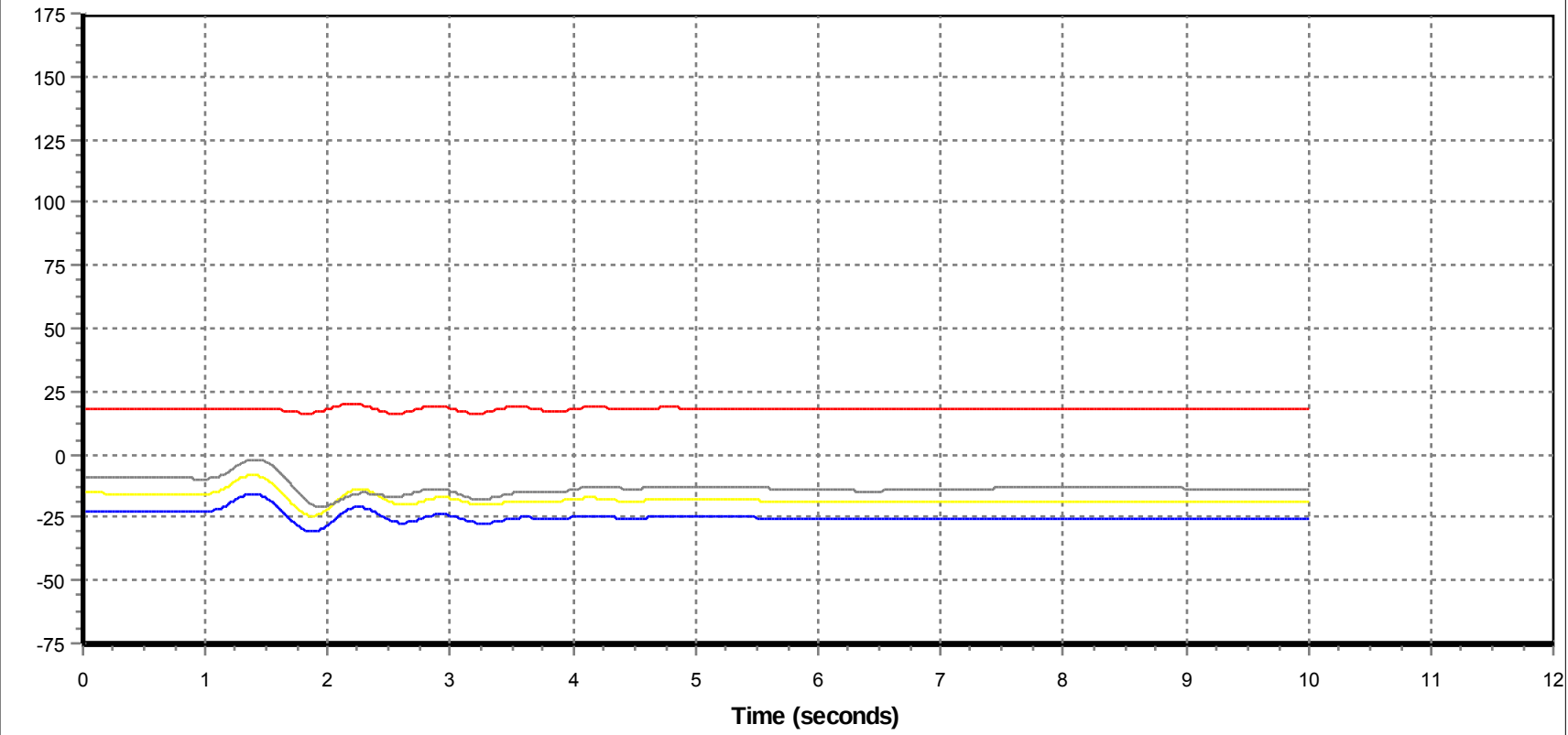

1 - ANGL 424[KEEP#2GN 19.000]2 : C702_1pfault_Dover_trip_9L68_43

2 - ANGL 18274[MACKAY2 18.000]1 : C702_1pfault_Dover_trip_9L68_43

3 - ANGL 3745[DOVERN 13.800]G1 : C702_1pfault_Dover_trip_9L68_43

4 - ANGL 19669[MRCP 13.800]1 : C702_1pfault_Dover_trip_9L68_43

5 - ANGL 10236[MUSKEG4 13.800]1 : C702_1pfault_Dover_trip_9L68_43

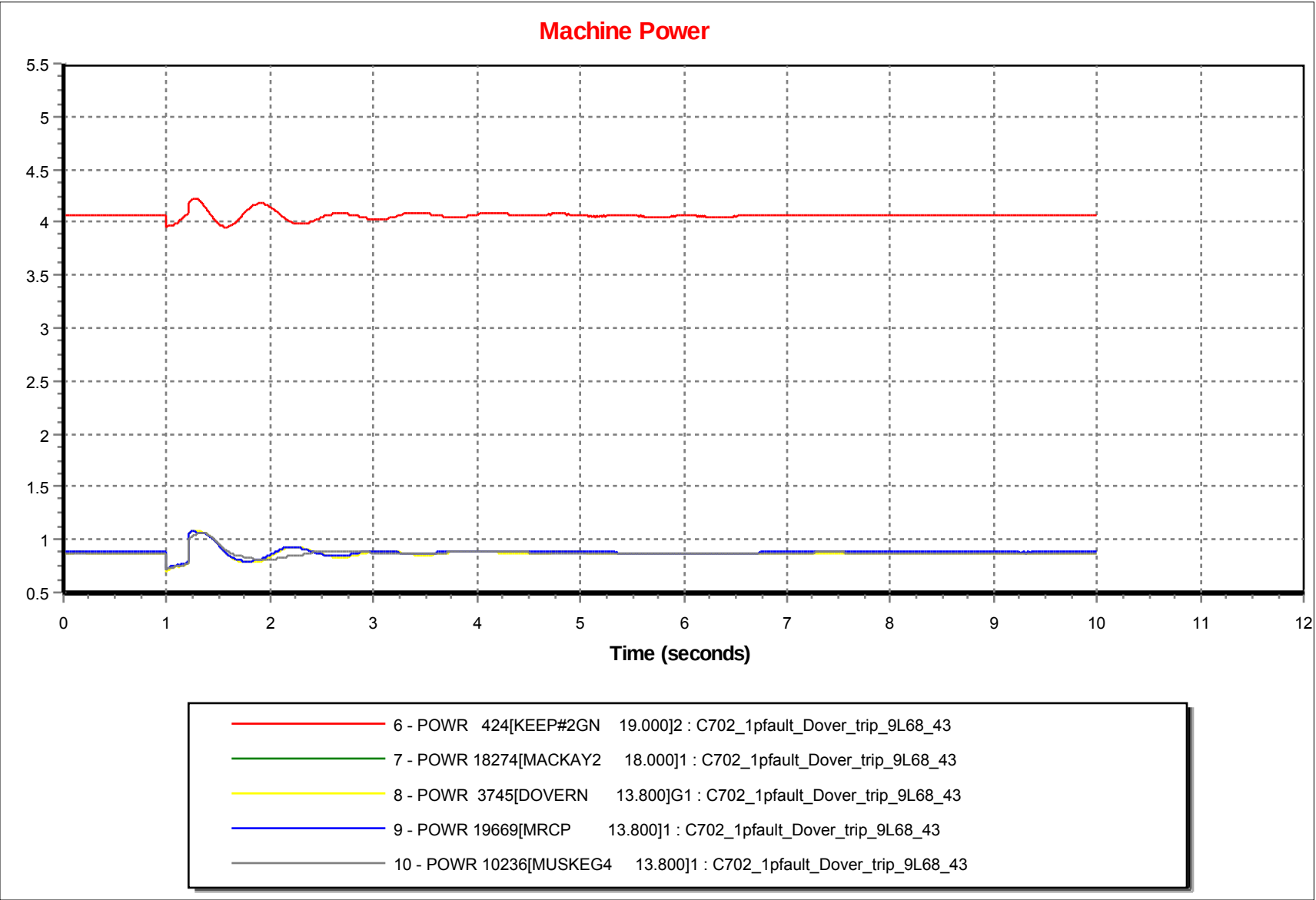
Machine Power
5.5
5
4.5
4
3.5
3
2.5
2
1.5
1
0.5
0
1
2
3
4
5
6
7
8
9
10
11
12
Time (seconds)
6 - POWR 424[KEEP#2GN 19.000]2 : C702_1pfault_Dover_trip_9L68_43
7 - POWR 18274[MACKAY2 18.000]1 : C702_1pfault_Dover_trip_9L68_43
8 - POWR 3745[DOVERN 13.800]G1 : C702_1pfault_Dover_trip_9L68_43
9 - POWR 19669[MRCP 13.800]1 : C702_1pfault_Dover_trip_9L68_43
10 - POWR 10236[MUSKEG4 13.800]1 : C702_1pfault_Dover_trip_9L68_43

Frequence Deviation

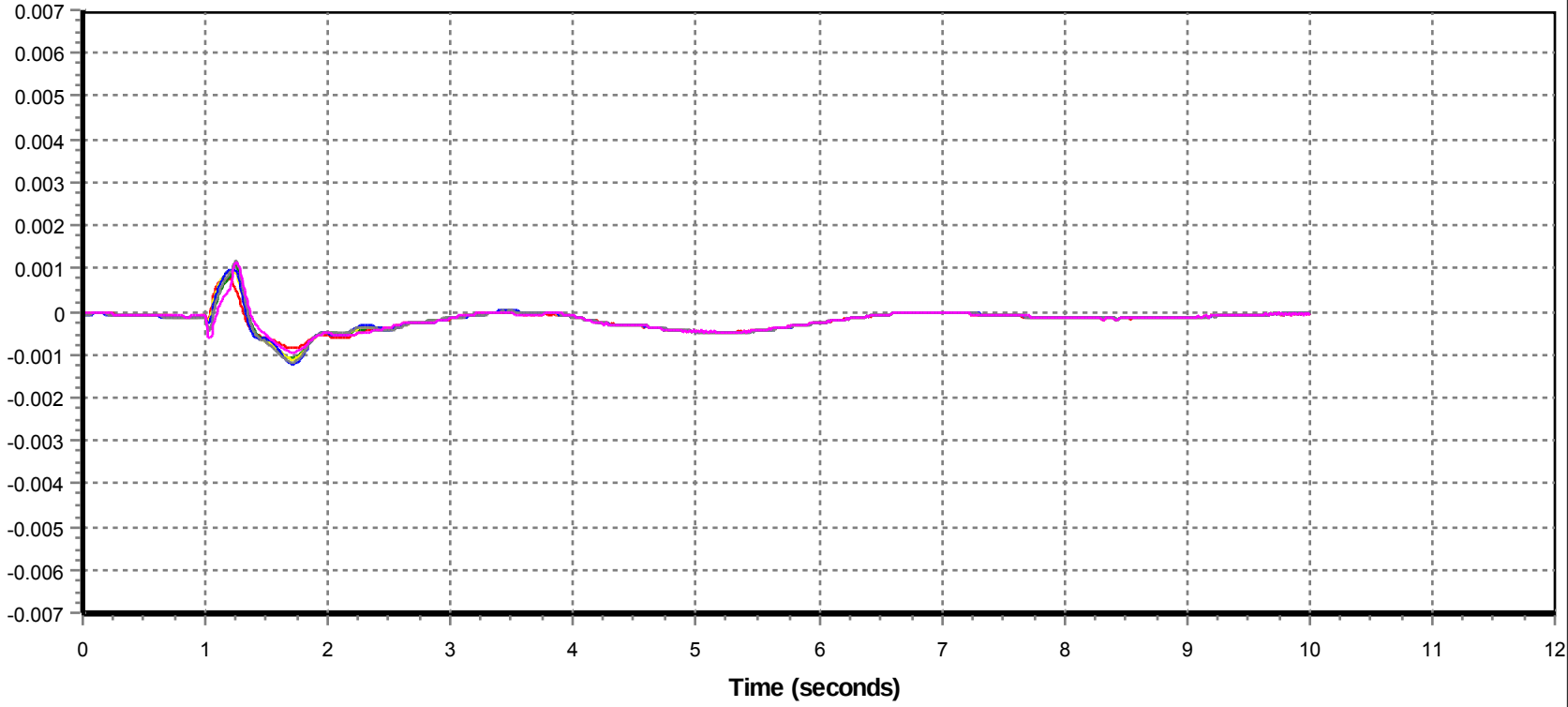

11 - FREQ 1601 [THICKWD1 500.00] : C702_1pfault_Dover_trip_9L68_43

12 - FREQ 1670 [BIRCHWOOD 240.00] : C702_1pfault_Dover_trip_9L68_43

13 - FREQ 666 [DOVER 240.00] : C702_1pfault_Dover_trip_9L68_43

14 - FREQ 1263 [JOSLYN4 240.00] : C702_1pfault_Dover_trip_9L68_43

15 - FREQ 98503 [ELLSR 240.00] : C702_1pfault_Dover_trip_9L68_43

16 - FREQ 1288 [LIVOCK01 240.00] : C702_1pfault_Dover_trip_9L68_43

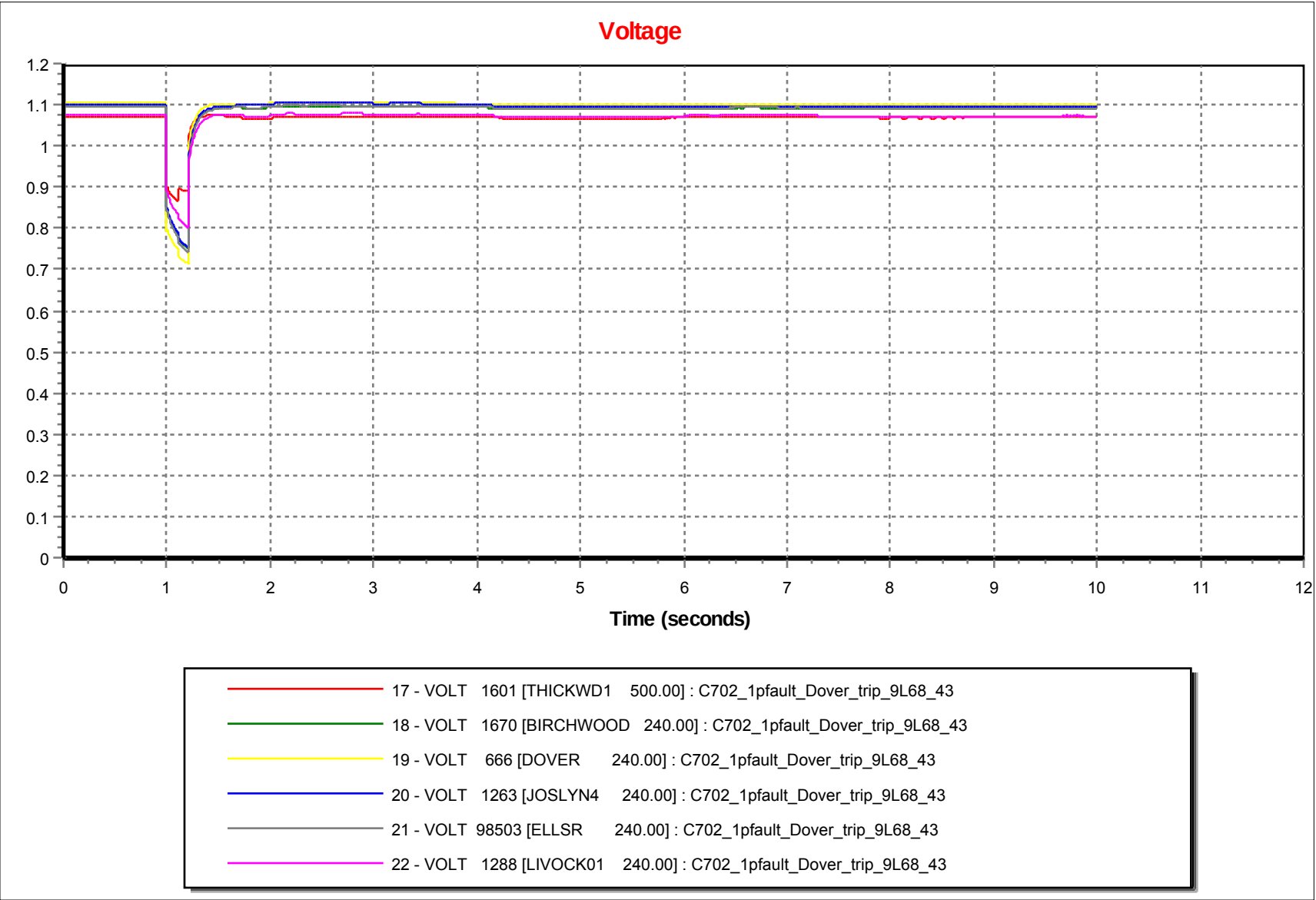
Voltage
1.2
1.1
1
0.9
0.8
0.7
0.6
0.5
0.4
0.3
0.2
0.1
0
0
1
2
3
4
5
6
7
8
9
10
11
12
Time (seconds)
17 - VOLT 1601 [THICKWD1 500.00] : C702_1pfault_Dover_trip_9L68_43
18 - VOLT 1670 [BIRCHWOOD 240.00] : C702_1pfault_Dover_trip_9L68_43
19 - VOLT 666 [DOVER 240.00] : C702_1pfault_Dover_trip_9L68_43
20 - VOLT 1263 [JOSLYN4 240.00] : C702_1pfault_Dover_trip_9L68_43
21 - VOLT 98503 [ELLSR 240.00] : C702_1pfault_Dover_trip_9L68_43
22 - VOLT 1288 [LIVOCK01 240.00] : C702_1pfault_Dover_trip_9L68_43

Relative Machine Angle

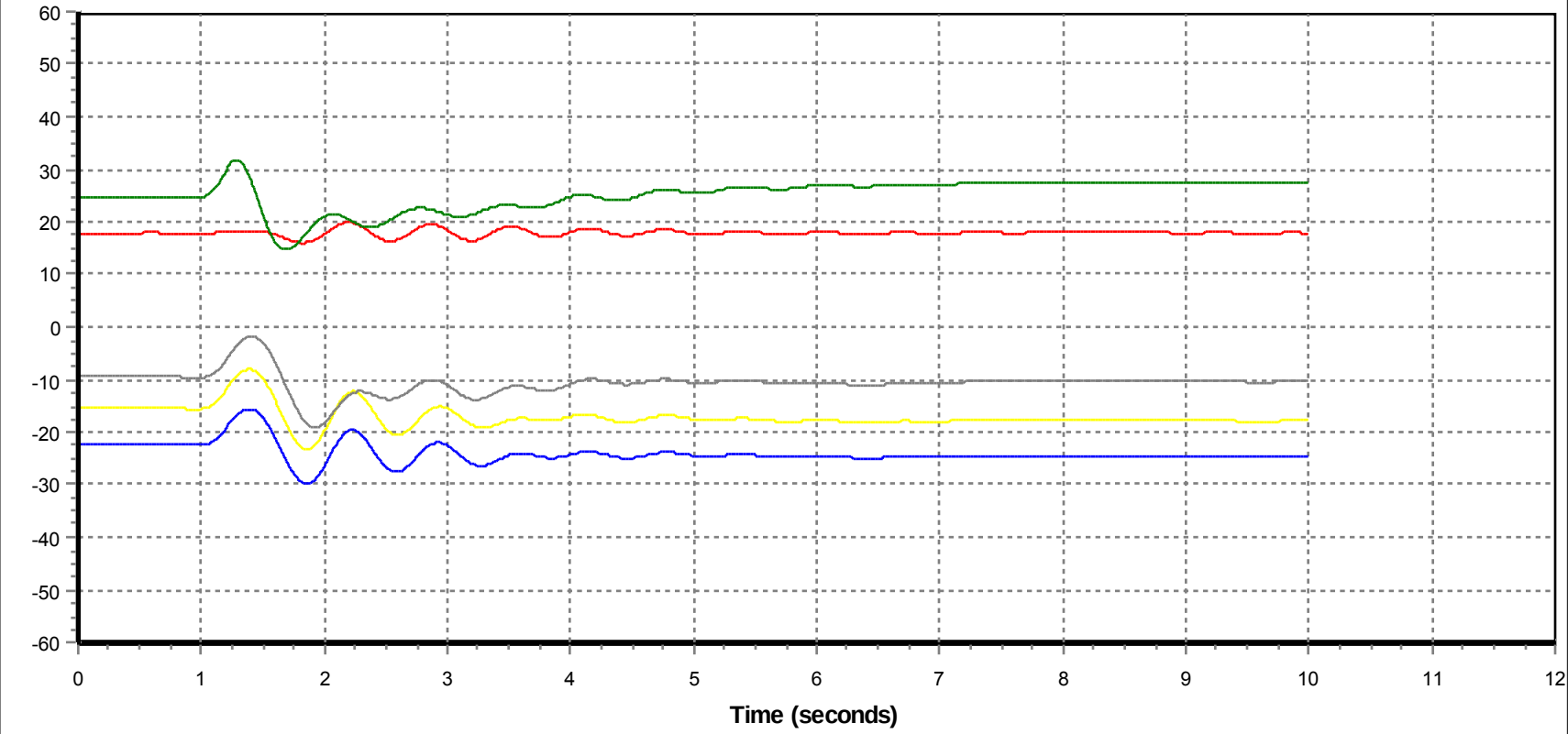

1 - ANGL 424[KEEP#2GN 19.000]2 : C703_1pfault_Dover_trip_9L30_01

2 - ANGL 18274[MACKAY2 18.000]1 : C703_1pfault_Dover_trip_9L30_01

3 - ANGL 3745[DOVERN 13.800]G1 : C703_1pfault_Dover_trip_9L30_01

4 - ANGL 19669[MRCP 13.800]1 : C703_1pfault_Dover_trip_9L30_01

5 - ANGL 10236[MUSKEG4 13.800]1 : C703_1pfault_Dover_trip_9L30_01

Machine Power

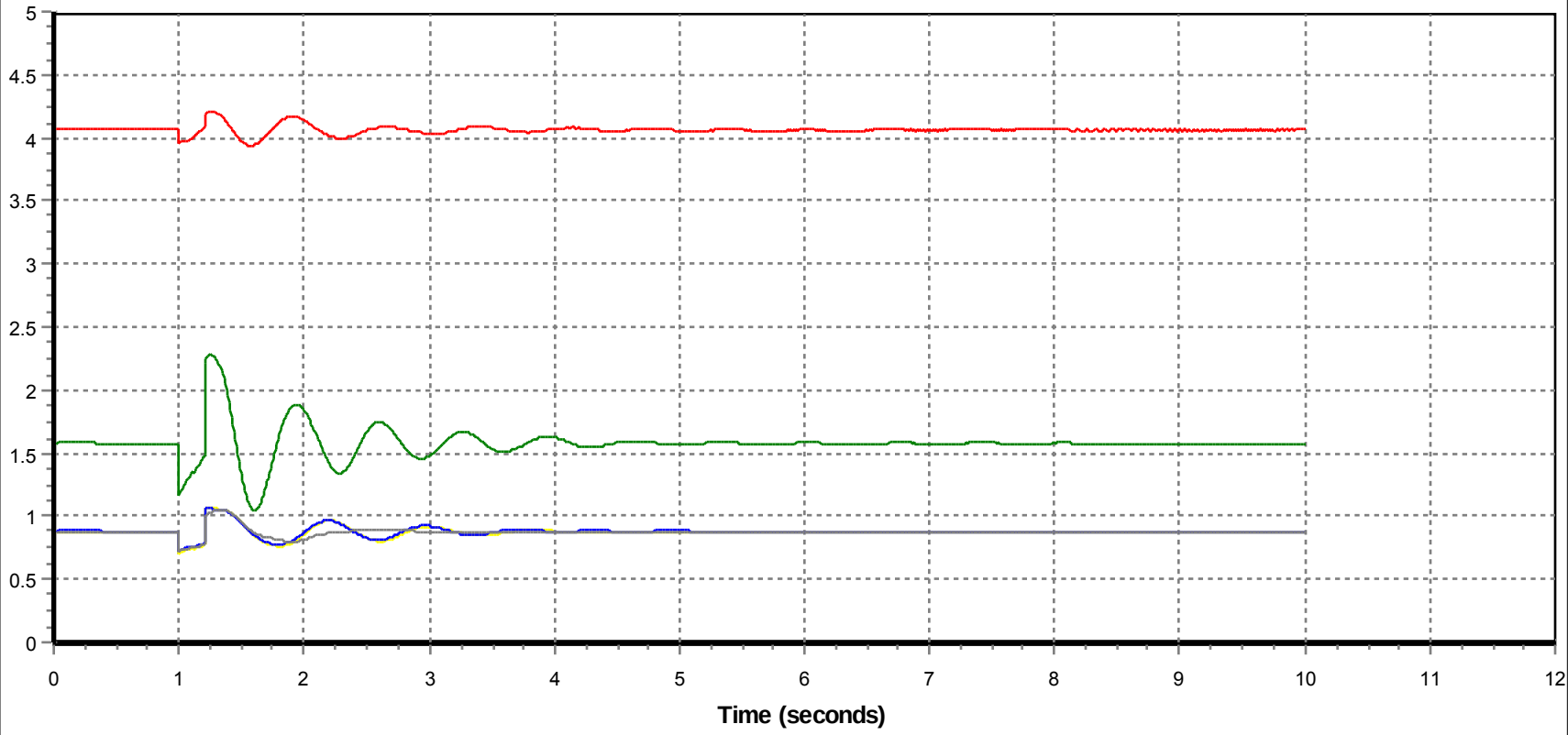

6 - POWR 424[KEEP#2GN 19.000]2 : C703_1pfault_Dover_trip_9L30_01

7 - POWR 18274[MACKAY2 18.000]1 : C703_1pfault_Dover_trip_9L30_01

8 - POWR 3745[DOVERN 13.800]G1 : C703_1pfault_Dover_trip_9L30_01

9 - POWR 19669[MRCP 13.800]1 : C703_1pfault_Dover_trip_9L30_01

10 - POWR 10236[MUSKEG4 13.800]1 : C703_1pfault_Dover_trip_9L30_01

Frequence Deviation

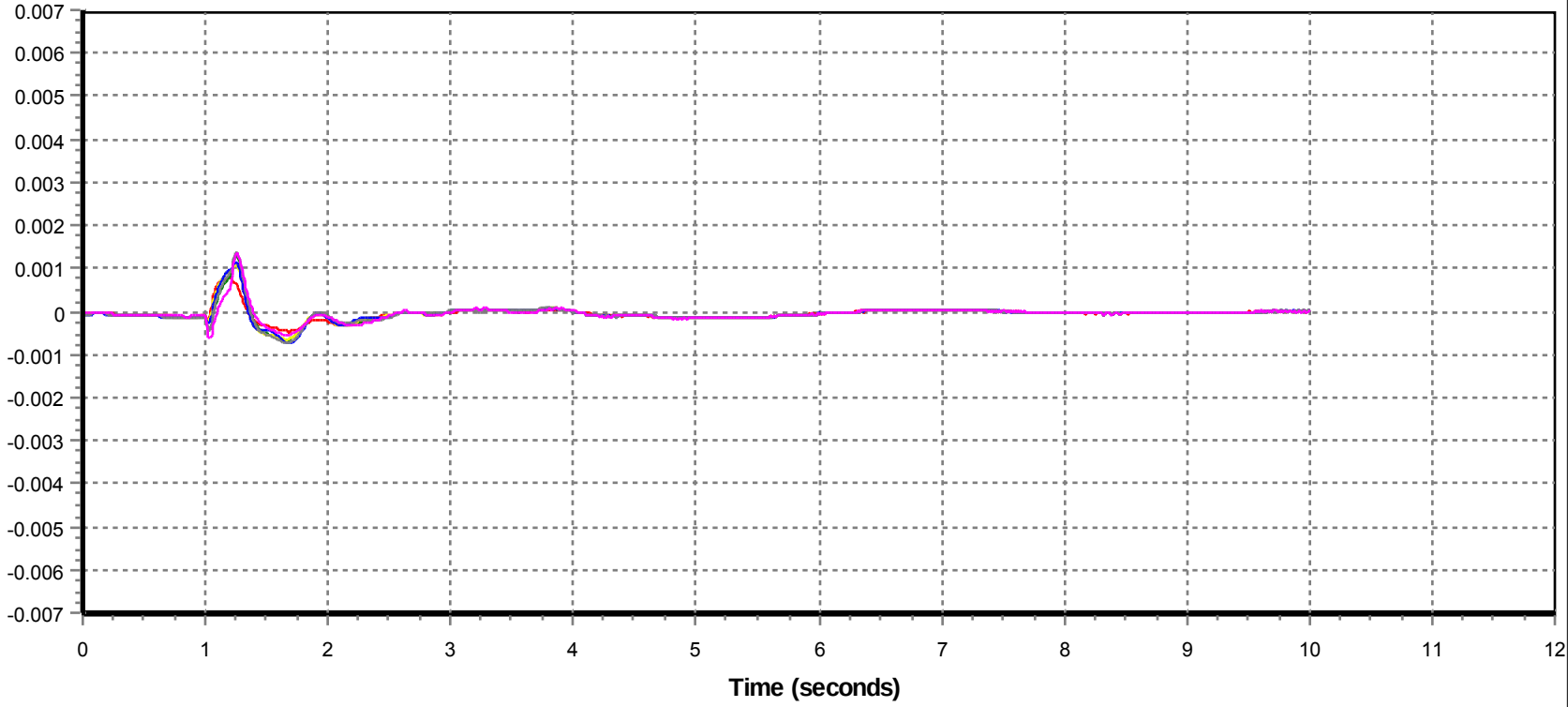

11 - FREQ 1601 [THICKWD1 500.00] : C703_1pfault_Dover_trip_9L30_01

12 - FREQ 1670 [BIRCHWOOD 240.00] : C703_1pfault_Dover_trip_9L30_01

13 - FREQ 666 [DOVER 240.00] : C703_1pfault_Dover_trip_9L30_01

14 - FREQ 1263 [JOSLYN4 240.00] : C703_1pfault_Dover_trip_9L30_01

15 - FREQ 98503 [ELLSR 240.00] : C703_1pfault_Dover_trip_9L30_01

16 - FREQ 1288 [LIVOCK01 240.00] : C703_1pfault_Dover_trip_9L30_01

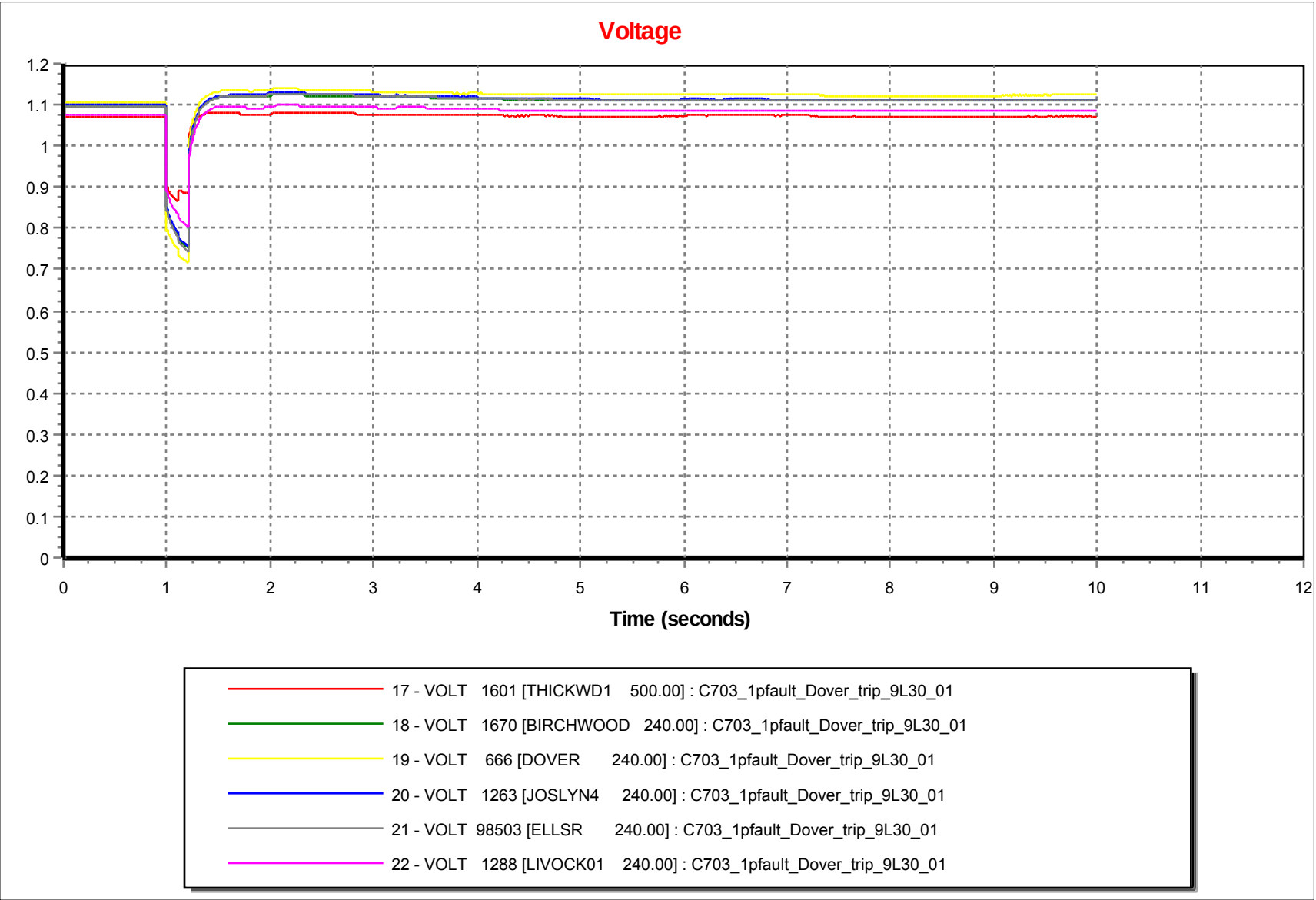
Voltage
1.2
1.1
1
0.9
0.8
0.7
0.6
0.5
0.4
0.3
0.2
0.1
0
0
1
2
3
4
5
6
7
8
9
10
11
12
Time (seconds)
17 - VOLT 1601 [THICKWD1 500.00] : C703_1pfault_Dover_trip_9L30_01
18 - VOLT 1670 [BIRCHWOOD 240.00] : C703_1pfault_Dover_trip_9L30_01
19 - VOLT 666 [DOVER 240.00] : C703_1pfault_Dover_trip_9L30_01
20 - VOLT 1263 [JOSLYN4 240.00] : C703_1pfault_Dover_trip_9L30_01
21 - VOLT 98503 [ELLSR 240.00] : C703_1pfault_Dover_trip_9L30_01
22 - VOLT 1288 [LIVOCK01 240.00] : C703_1pfault_Dover_trip_9L30_01

Relative Machine Angle

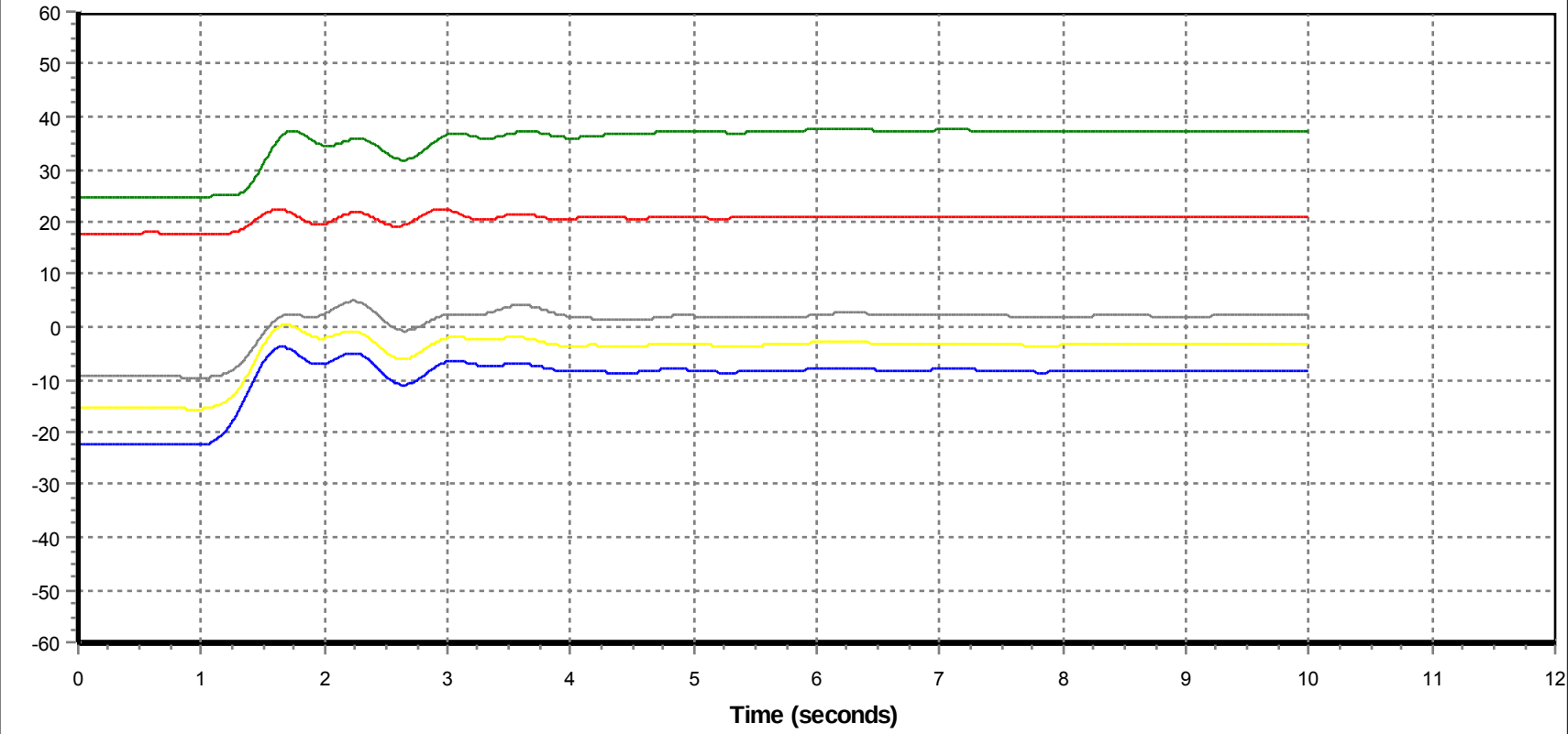

1 - ANGL 424[KEEP#2GN 19.000]2 : C704_1pfault_Dover_trip_9L95_57

2 - ANGL 18274[MACKAY2 18.000]1 : C704_1pfault_Dover_trip_9L95_57

3 - ANGL 3745[DOVERN 13.800]G1 : C704_1pfault_Dover_trip_9L95_57

4 - ANGL 19669[MRCP 13.800]1 : C704_1pfault_Dover_trip_9L95_57

5 - ANGL 10236[MUSKEG4 13.800]1 : C704_1pfault_Dover_trip_9L95_57

Machine Power

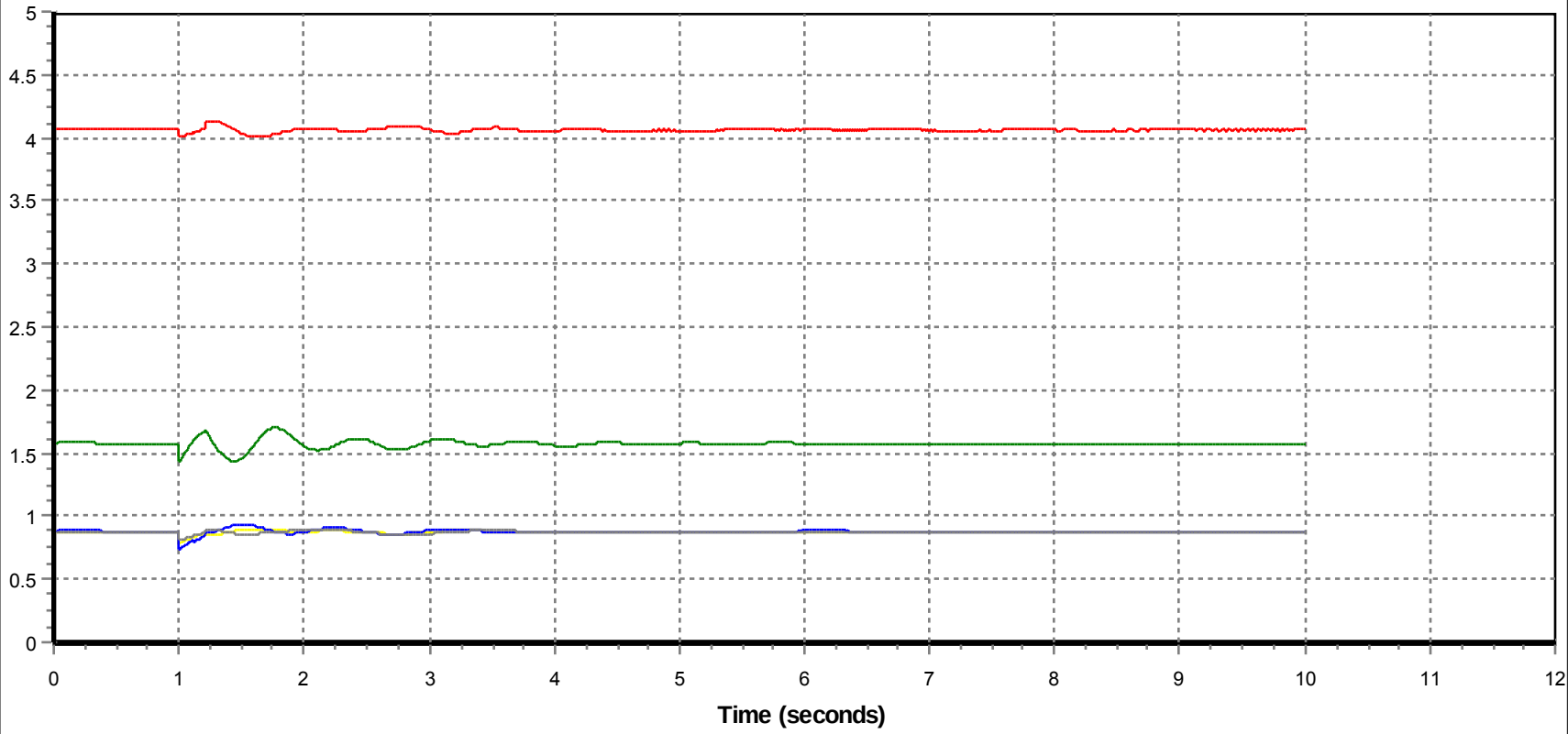

6 - POWR 424[KEEP#2GN 19.000]2 : C704_1pfault_Dover_trip_9L95_57

7 - POWR 18274[MACKAY2 18.000]1 : C704_1pfault_Dover_trip_9L95_57

8 - POWR 3745[DOVERN 13.800]G1 : C704_1pfault_Dover_trip_9L95_57

9 - POWR 19669[MRCP 13.800]1 : C704_1pfault_Dover_trip_9L95_57

10 - POWR 10236[MUSKEG4 13.800]1 : C704_1pfault_Dover_trip_9L95_57

Frequence Deviation

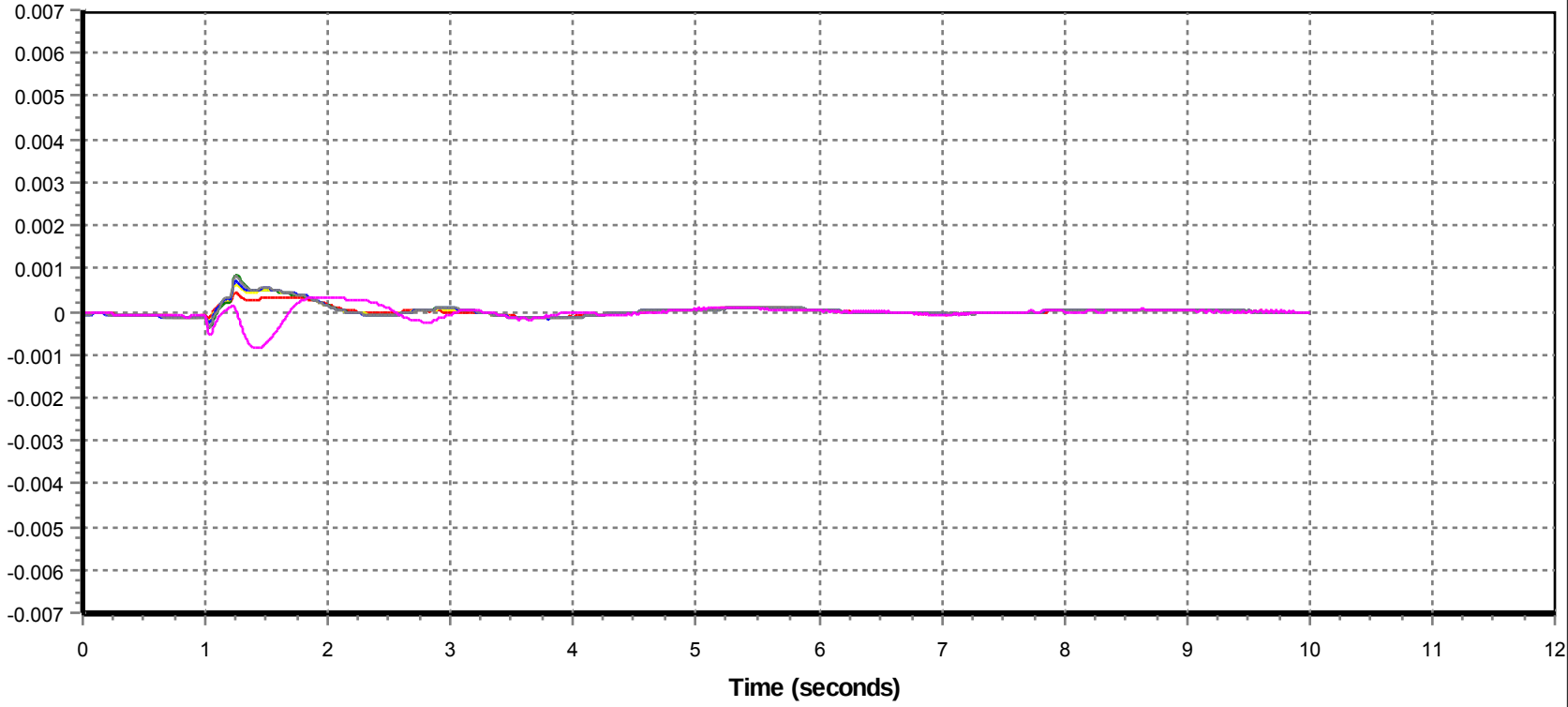

11 - FREQ 1601 [THICKWD1 500.00] : C704_1pfault_Dover_trip_9L95_57

12 - FREQ 1670 [BIRCHWOOD 240.00] : C704_1pfault_Dover_trip_9L95_57

13 - FREQ 666 [DOVER 240.00] : C704_1pfault_Dover_trip_9L95_57

14 - FREQ 1263 [JOSLYN4 240.00] : C704_1pfault_Dover_trip_9L95_57

15 - FREQ 98503 [ELLSR 240.00] : C704_1pfault_Dover_trip_9L95_57

16 - FREQ 1288 [LIVOCK01 240.00] : C704_1pfault_Dover_trip_9L95_57

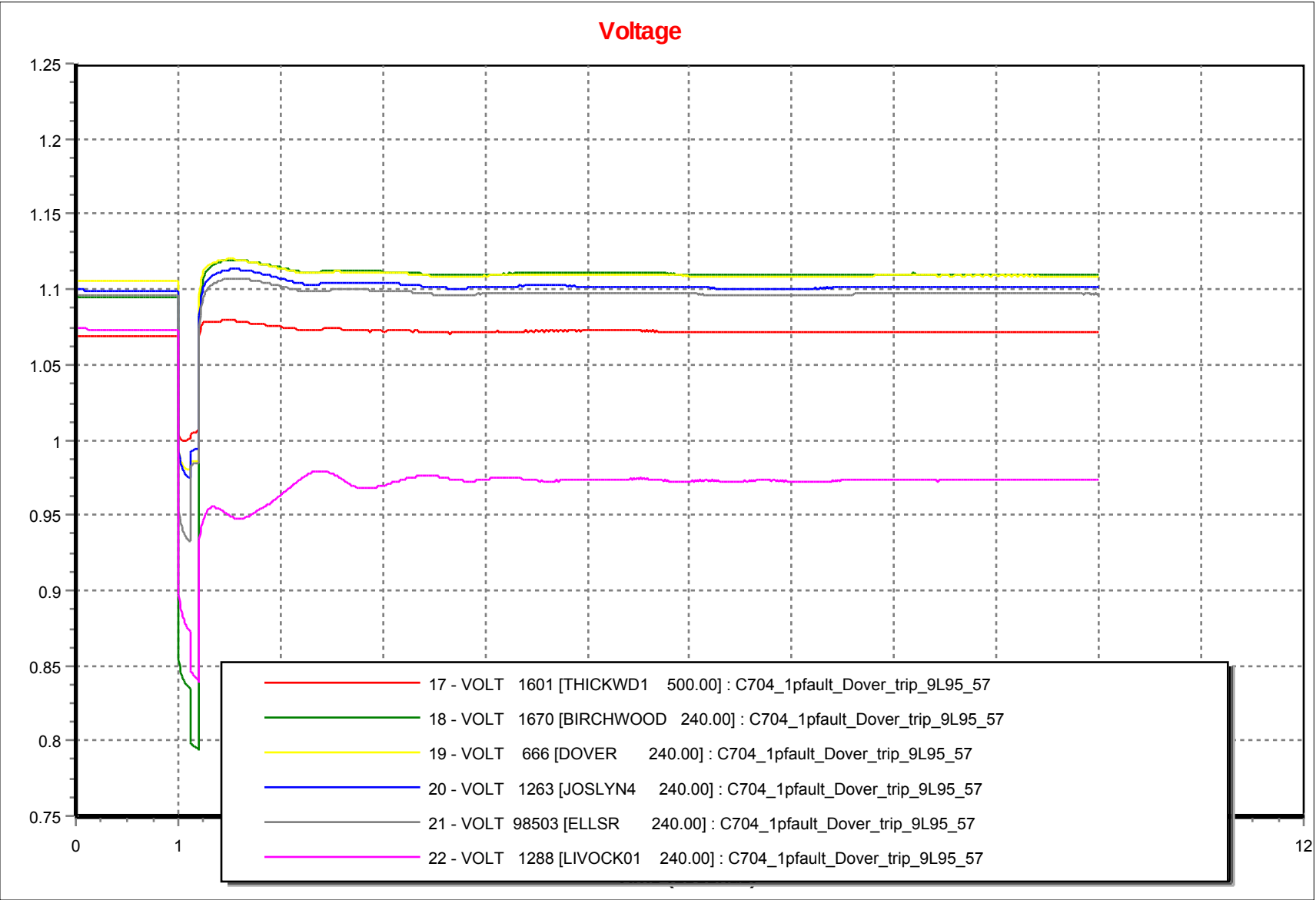
Voltage
1.25
1.2
1.15
1.1
1.05
1
0.95
0.9
0.85
0.8
0.75
0
1
12
17 - VOLT 1601 [THICKWD1 500.00] : C704_1pfault_Dover_trip_9L95_57
18 - VOLT 1670 [BIRCHWOOD 240.00] : C704_1pfault_Dover_trip_9L95_57
19 - VOLT 666 [DOVER 240.00] : C704_1pfault_Dover_trip_9L95_57
20 - VOLT 1263 [JOSLYN4 240.00] : C704_1pfault_Dover_trip_9L95_57
21 - VOLT 98503 [ELLSR 240.00] : C704_1pfault_Dover_trip_9L95_57
22 - VOLT 1288 [LIVOCK01 240.00] : C704_1pfault_Dover_trip_9L95_57

Relative Machine Angle

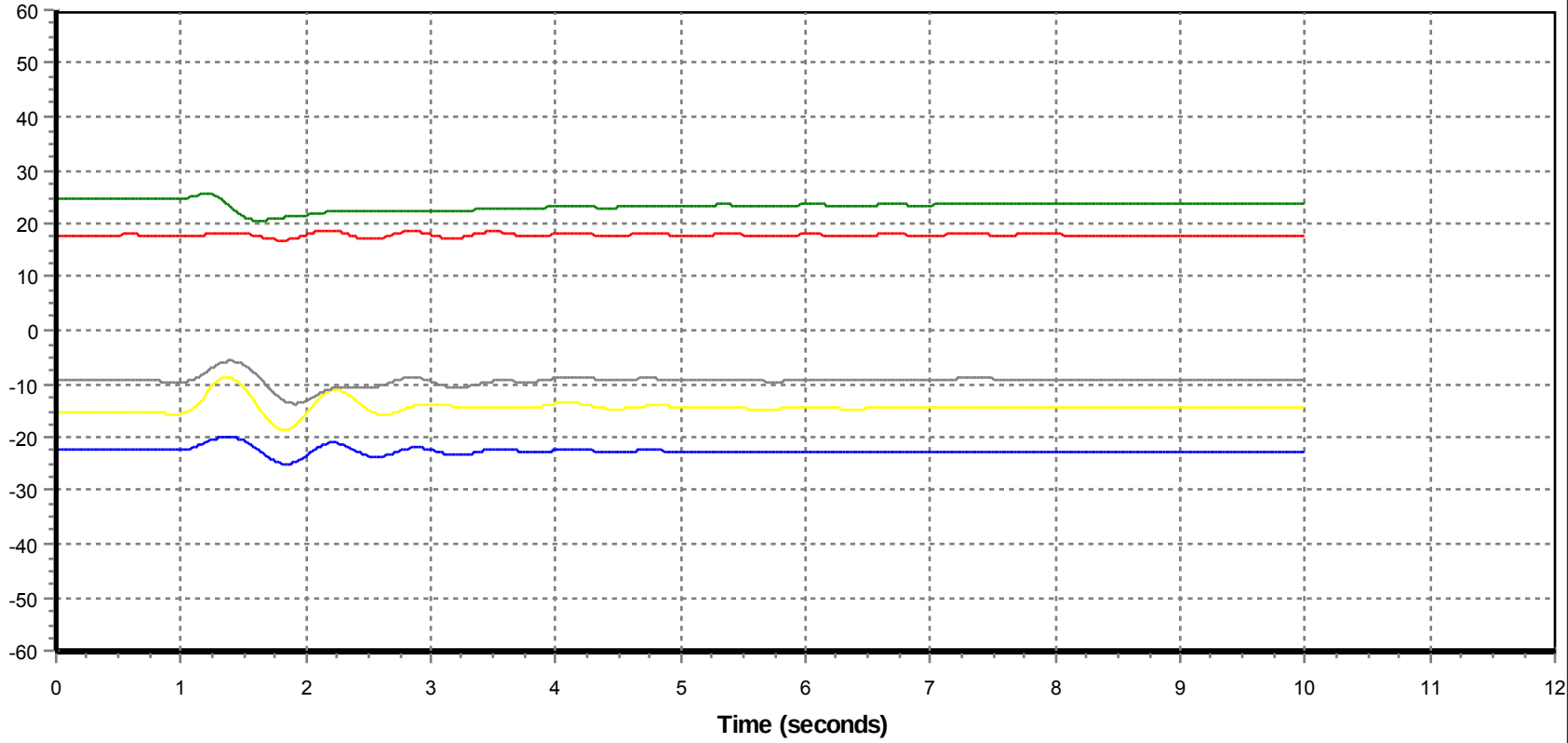

1 - ANGL 424[KEEP#2GN 19.000]2 : C705_1pfault_ER_trip_9L95_76

2 - ANGL 18274[MACKAY2 18.000]1 : C705_1pfault_ER_trip_9L95_76

3 - ANGL 3745[DOVERN 13.800]G1 : C705_1pfault_ER_trip_9L95_76

4 - ANGL 19669[MRCP 13.800]1 : C705_1pfault_ER_trip_9L95_76

5 - ANGL 10236[MUSKEG4 13.800]1 : C705_1pfault_ER_trip_9L95_76

Machine Power

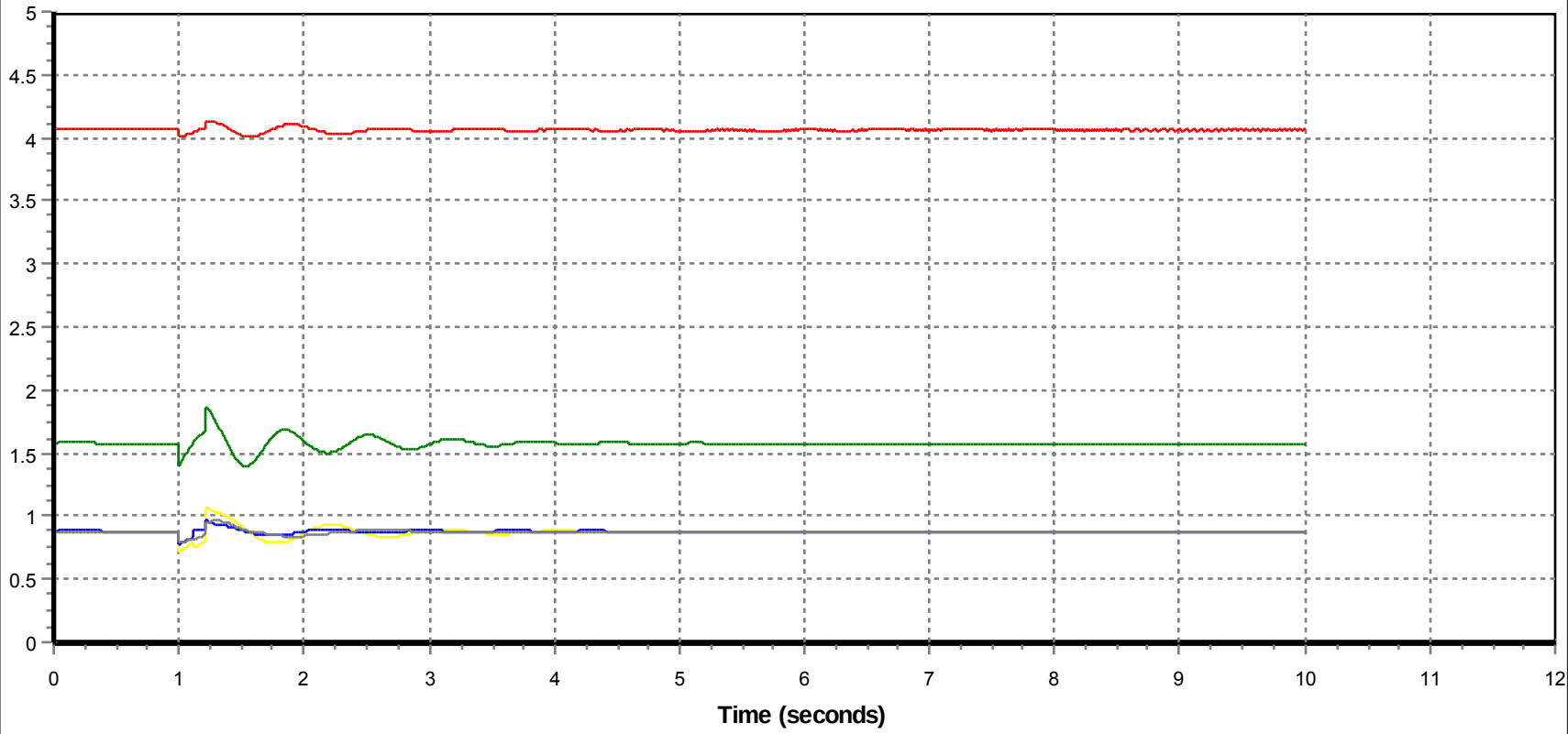

6 - POWR 424[KEEP#2GN 19.000]2 : C705_1pfault_ER_trip_9L95_76

7 - POWR 18274[MACKAY2 18.000]1 : C705_1pfault_ER_trip_9L95_76

8 - POWR 3745[DOVERN 13.800]G1 : C705_1pfault_ER_trip_9L95_76

9 - POWR 19669[MRCP 13.800]1 : C705_1pfault_ER_trip_9L95_76

10 - POWR 10236[MUSKEG4 13.800]1 : C705_1pfault_ER_trip_9L95_76

Frequence Deviation

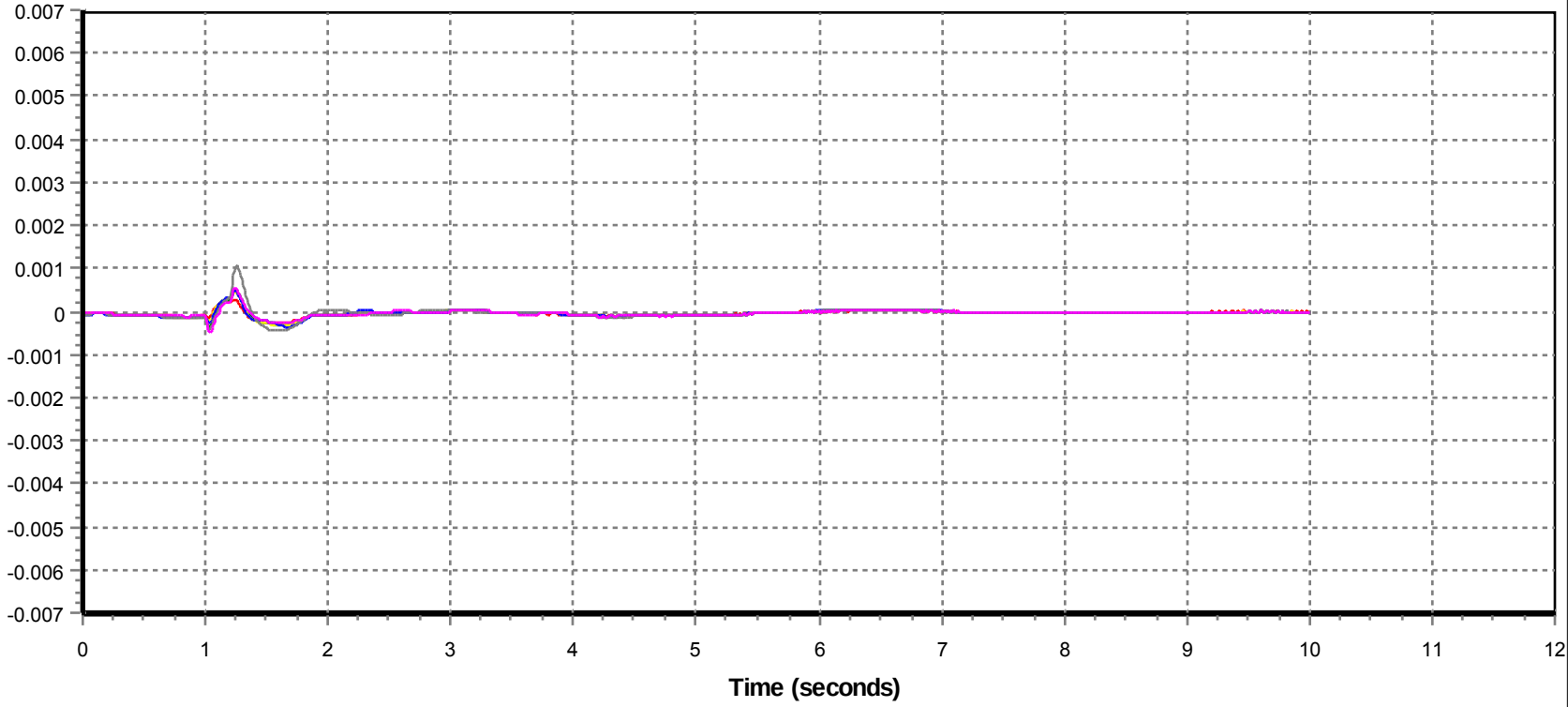

11 - FREQ 1601 [THICKWD1 500.00] : C705_1pfault_ER_trip_9L95_76

12 - FREQ 1670 [BIRCHWOOD 240.00] : C705_1pfault_ER_trip_9L95_76

13 - FREQ 666 [DOVER 240.00] : C705_1pfault_ER_trip_9L95_76

14 - FREQ 1263 [JOSLYN4 240.00] : C705_1pfault_ER_trip_9L95_76

15 - FREQ 98503 [ELLSR 240.00] : C705_1pfault_ER_trip_9L95_76

16 - FREQ 1288 [LIVOCK01 240.00] : C705_1pfault_ER_trip_9L95_76

Voltage

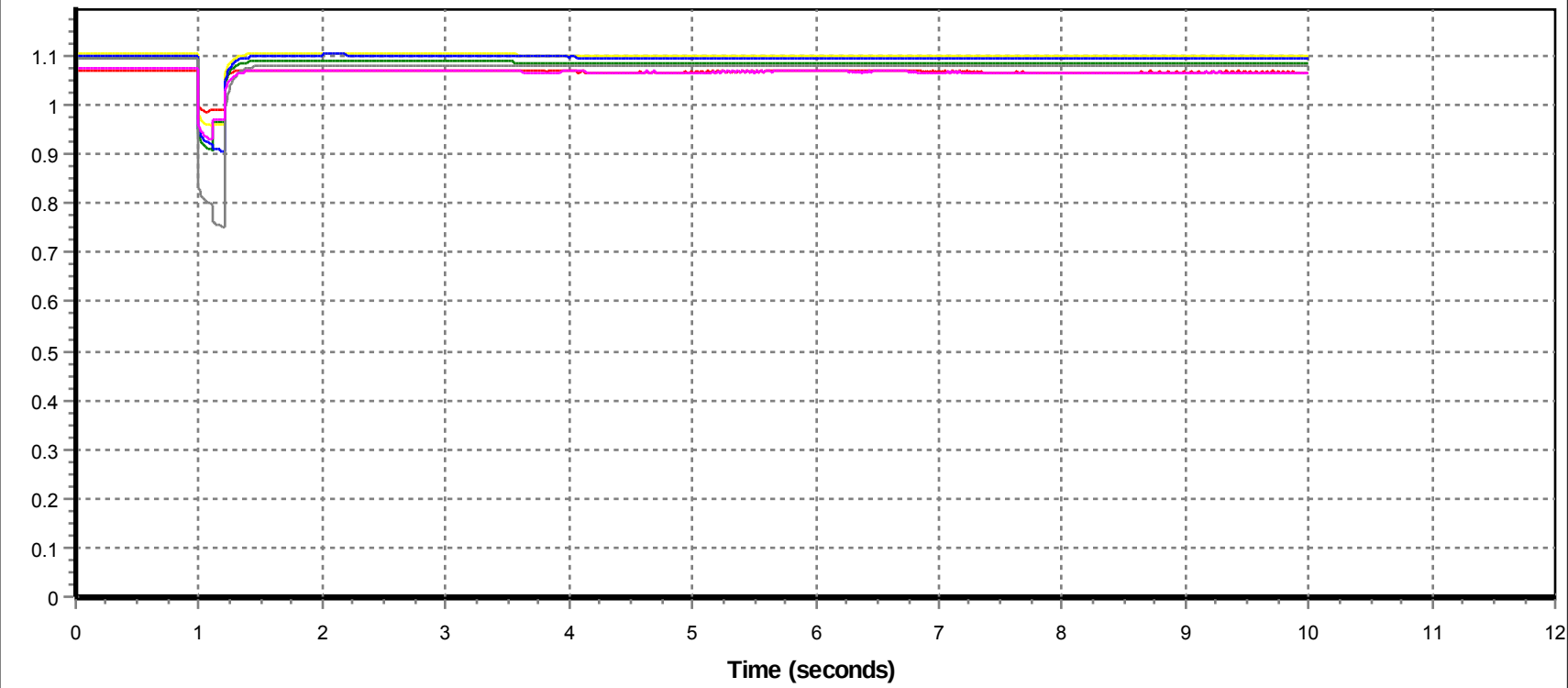

17 - VOLT 1601 [THICKWD1 500.00] : C705_1pfault_ER_trip_9L95_76

18 - VOLT 1670 [BIRCHWOOD 240.00] : C705_1pfault_ER_trip_9L95_76

19 - VOLT 666 [DOVER 240.00] : C705_1pfault_ER_trip_9L95_76

20 - VOLT 1263 [JOSLYN4 240.00] : C705_1pfault_ER_trip_9L95_76

21 - VOLT 98503 [ELLSR 240.00] : C705_1pfault_ER_trip_9L95_76

22 - VOLT 1288 [LIVOCK01 240.00] : C705_1pfault_ER_trip_9L95_76

Relative Machine Angle

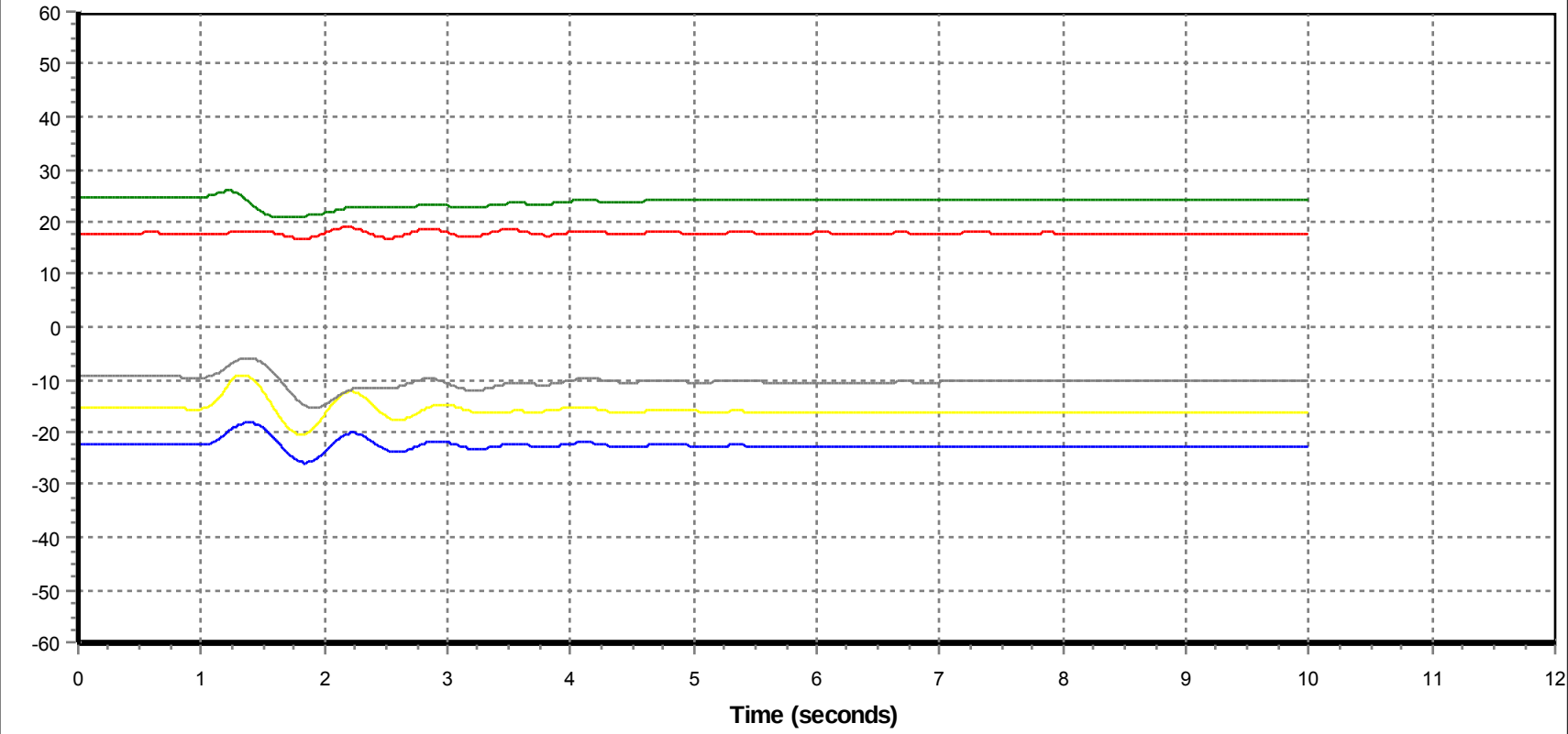

1 - ANGL 424[KEEP#2GN 19.000]2 : C706_1pfault_ER_trip_9L08_114

2 - ANGL 18274[MACKAY2 18.000]1 : C706_1pfault_ER_trip_9L08_114

3 - ANGL 3745[DOVERN 13.800]G1 : C706_1pfault_ER_trip_9L08_114

4 - ANGL 19669[MRCP 13.800]1 : C706_1pfault_ER_trip_9L08_114

5 - ANGL 10236[MUSKEG4 13.800]1 : C706_1pfault_ER_trip_9L08_114

Machine Power

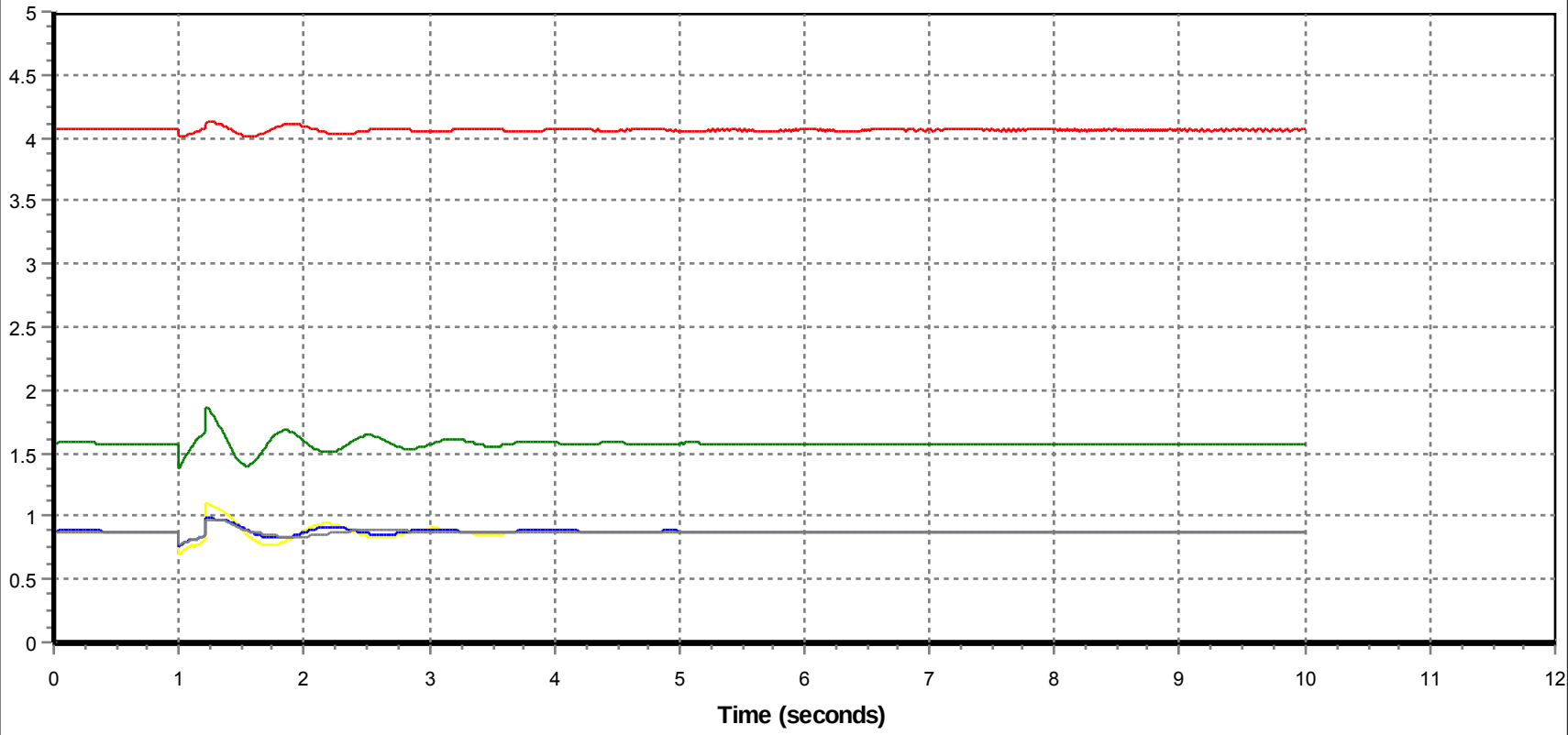

6 - POWR 424[KEEP#2GN 19.000]2 : C706_1pfault_ER_trip_9L08_114

7 - POWR 18274[MACKAY2 18.000]1 : C706_1pfault_ER_trip_9L08_114

8 - POWR 3745[DOVERN 13.800]G1 : C706_1pfault_ER_trip_9L08_114

9 - POWR 19669[MRCP 13.800]1 : C706_1pfault_ER_trip_9L08_114

10 - POWR 10236[MUSKEG4 13.800]1 : C706_1pfault_ER_trip_9L08_114

Frequence Deviation

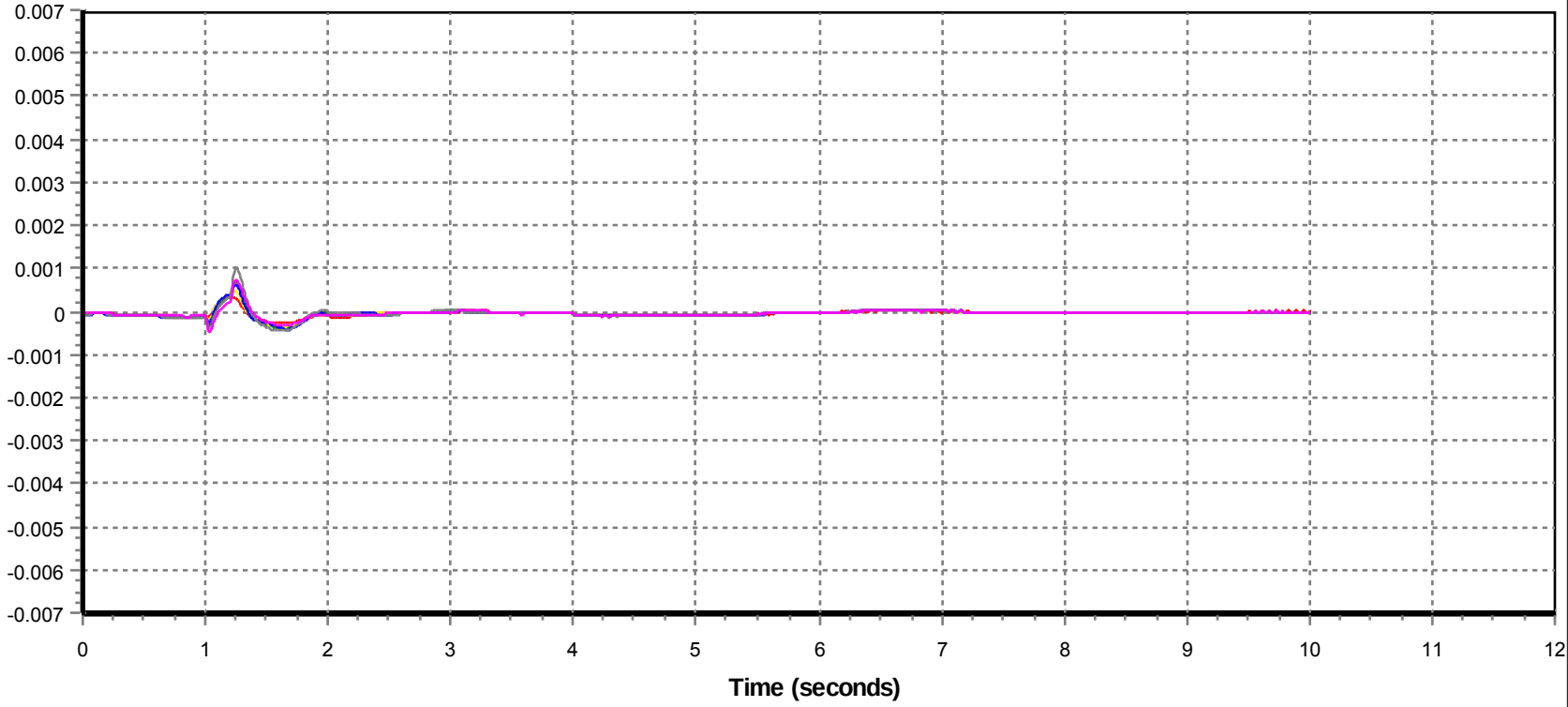

11 - FREQ 1601 [THICKWD1 500.00] : C706_1pfault_ER_trip_9L08_114

12 - FREQ 1670 [BIRCHWOOD 240.00] : C706_1pfault_ER_trip_9L08_114

13 - FREQ 666 [DOVER 240.00] : C706_1pfault_ER_trip_9L08_114

14 - FREQ 1263 [JOSLYN4 240.00] : C706_1pfault_ER_trip_9L08_114

15 - FREQ 98503 [ELLSR 240.00] : C706_1pfault_ER_trip_9L08_114

16 - FREQ 1288 [LIVOCK01 240.00] : C706_1pfault_ER_trip_9L08_114

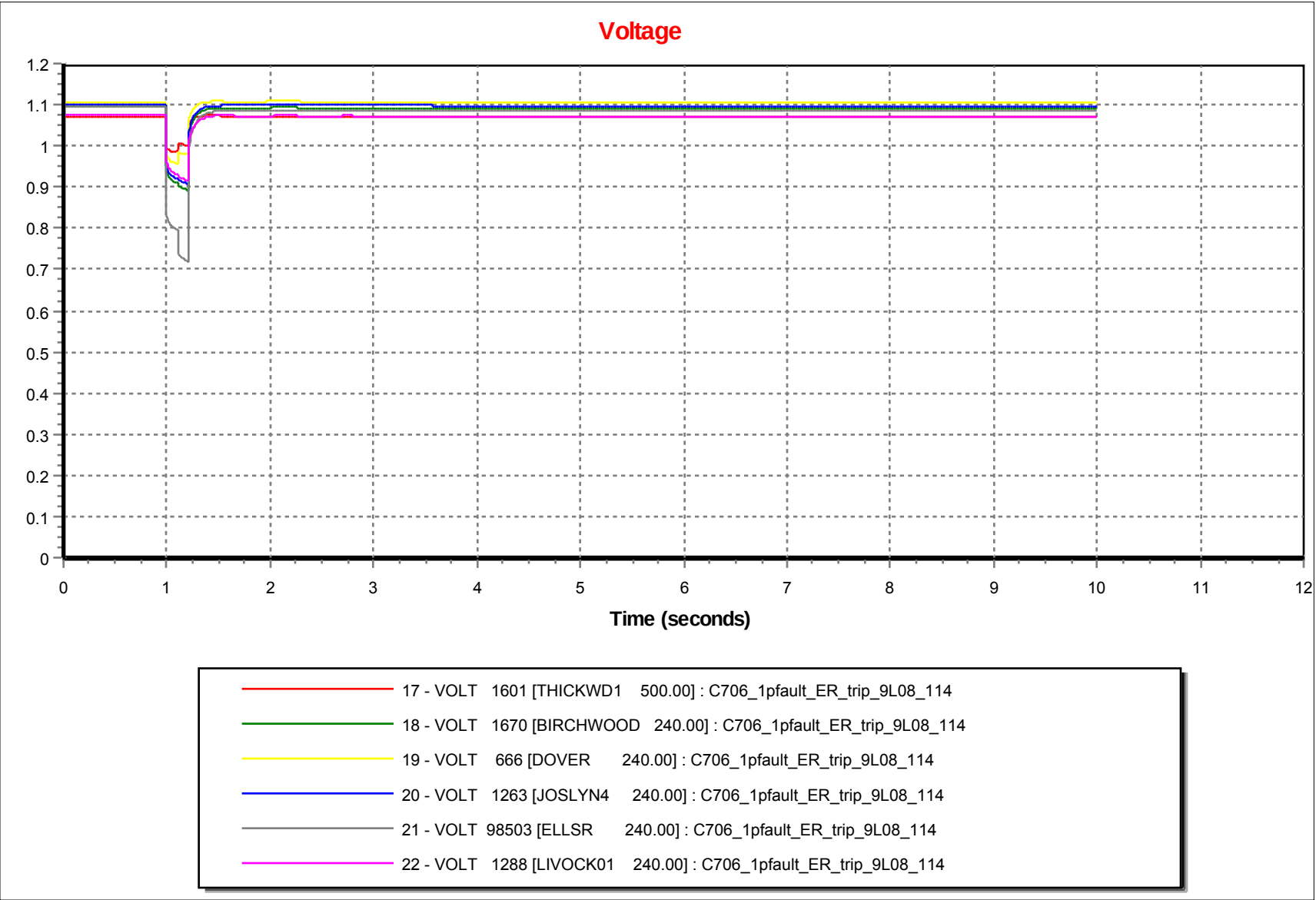
Voltage
1.2
1.1
1
0.9
0.8
0.7
0.6
0.5
0.4
0.3
0.2
0.1
0
0
1
2
3
4
5
6
7
8
9
10
11
12
Time (seconds)
17 - VOLT 1601 [THICKWD1 500.00] : C706_1pfault_ER_trip_9L08_114
18 - VOLT 1670 [BIRCHWOOD 240.00] : C706_1pfault_ER_trip_9L08_114
19 - VOLT 666 [DOVER 240.00] : C706_1pfault_ER_trip_9L08_114
20 - VOLT 1263 [JOSLYN4 240.00] : C706_1pfault_ER_trip_9L08_114
21 - VOLT 98503 [ELLSR 240.00] : C706_1pfault_ER_trip_9L08_114
22 - VOLT 1288 [LIVOCK01 240.00] : C706_1pfault_ER_trip_9L08_114

Relative Machine Angle

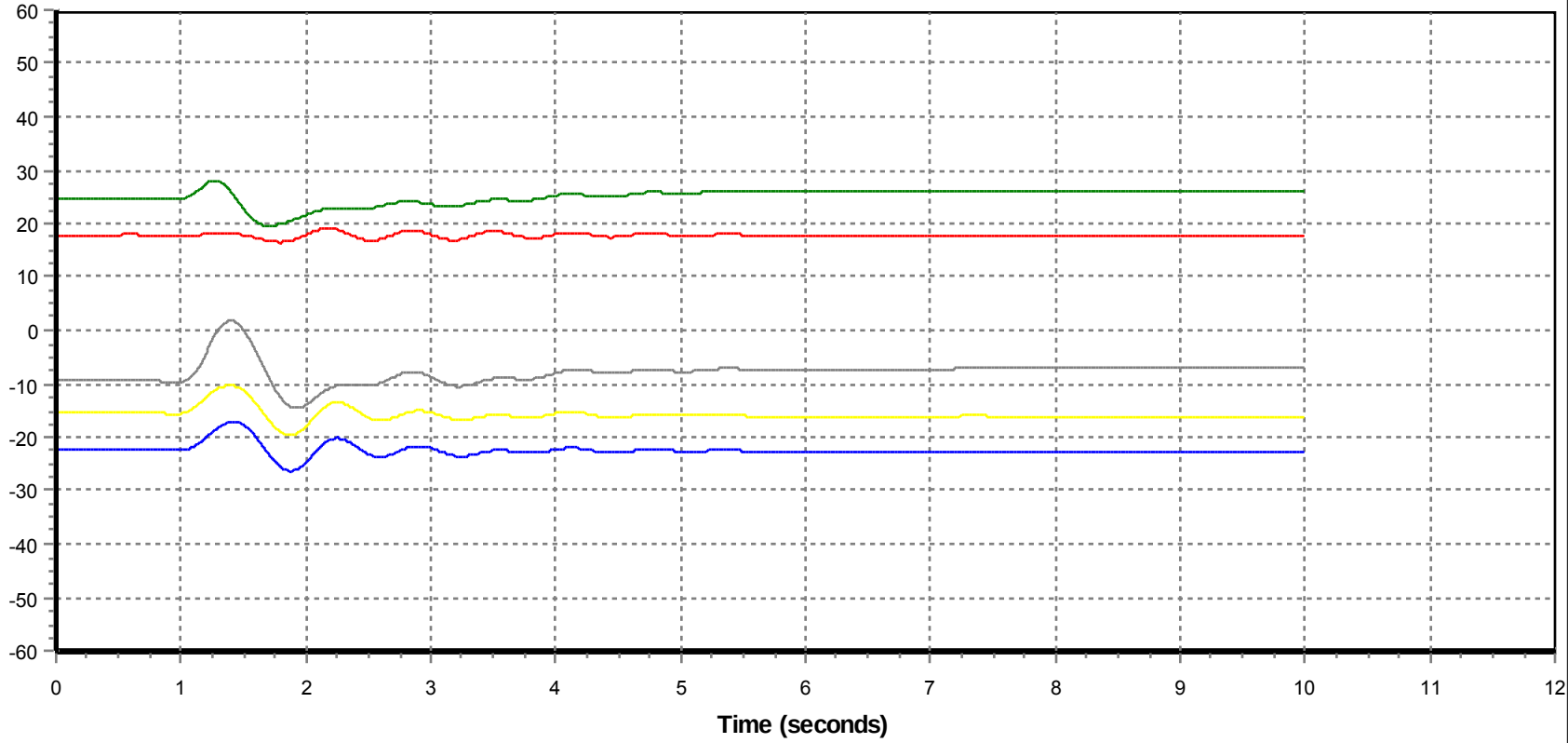

1 - ANGL 424[KEEP#2GN 19.000]2 : C707_1pfault_Joslyn_trip_9L76_32

2 - ANGL 18274[MACKAY2 18.000]1 : C707_1pfault_Joslyn_trip_9L76_32

3 - ANGL 3745[DOVERN 13.800]G1 : C707_1pfault_Joslyn_trip_9L76_32

4 - ANGL 19669[MRCP 13.800]1 : C707_1pfault_Joslyn_trip_9L76_32

5 - ANGL 10236[MUSKEG4 13.800]1 : C707_1pfault_Joslyn_trip_9L76_32

Machine Power

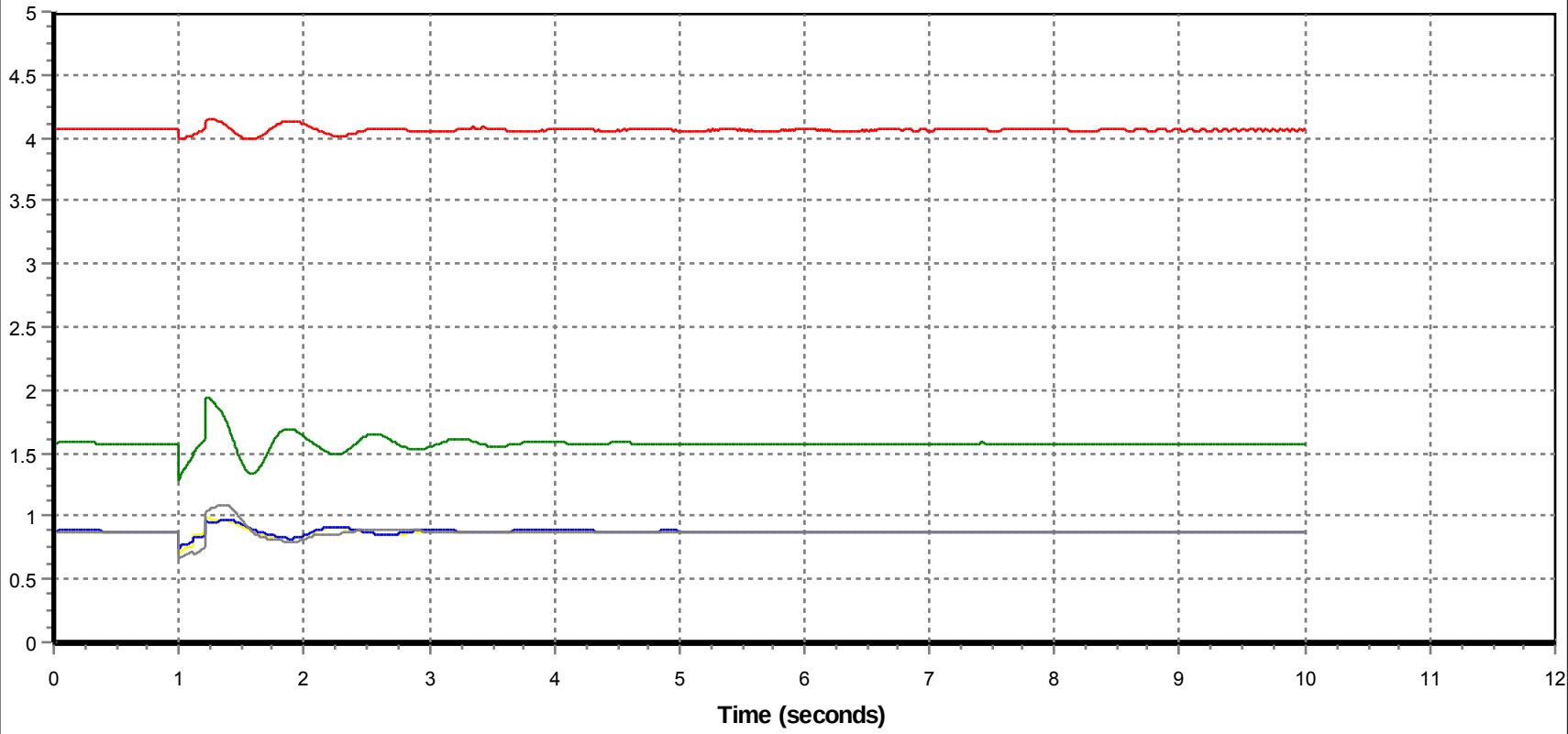

6 - POWR 424[KEEP#2GN 19.000]2 : C707_1pfault_Joslyn_trip_9L76_32

7 - POWR 18274[MACKAY2 18.000]1 : C707_1pfault_Joslyn_trip_9L76_32

8 - POWR 3745[DOVERN 13.800]G1 : C707_1pfault_Joslyn_trip_9L76_32

9 - POWR 19669[MRCP 13.800]1 : C707_1pfault_Joslyn_trip_9L76_32

10 - POWR 10236[MUSKEG4 13.800]1 : C707_1pfault_Joslyn_trip_9L76_32

Frequence Deviation

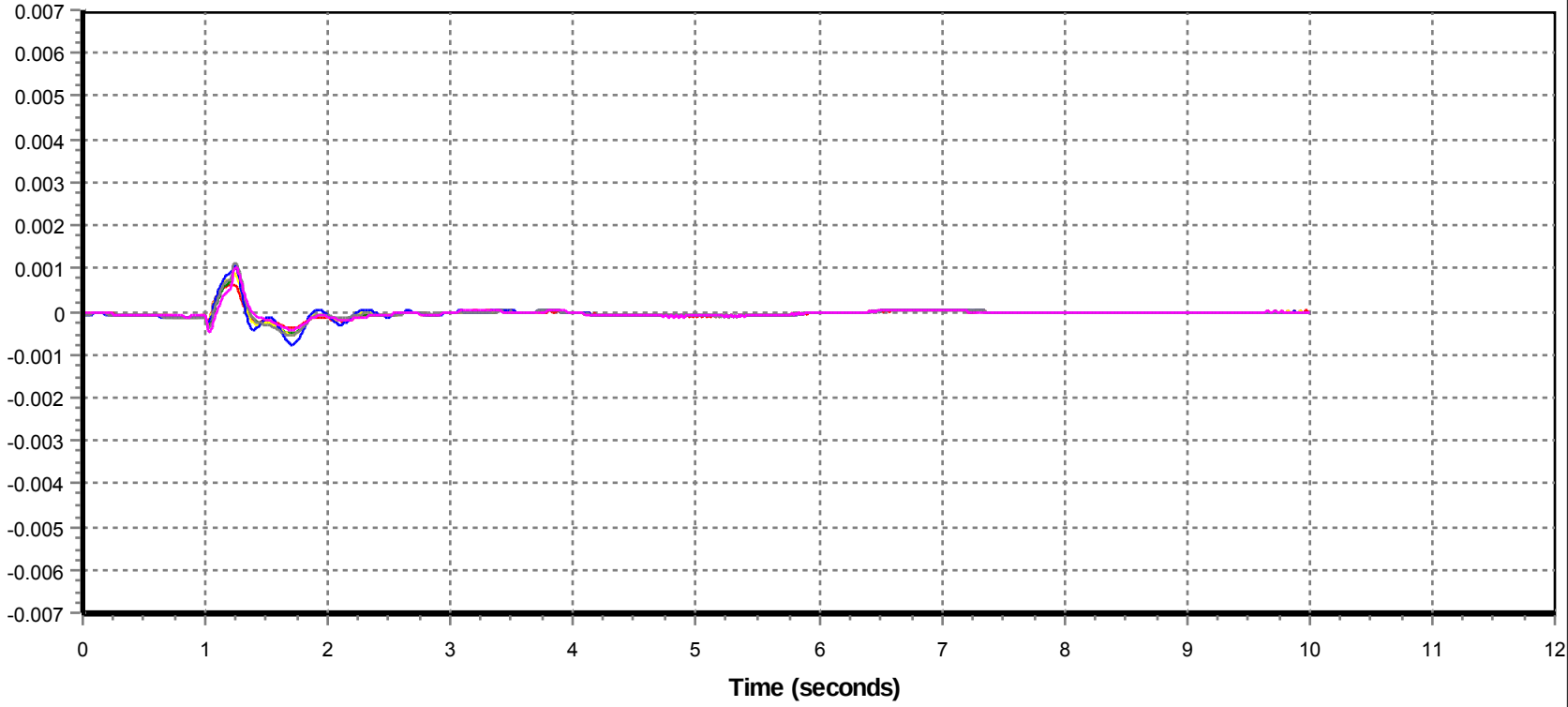

11 - FREQ 1601 [THICKWD1 500.00] : C707_1pfault_Joslyn_trip_9L76_32

12 - FREQ 1670 [BIRCHWOOD 240.00] : C707_1pfault_Joslyn_trip_9L76_32

13 - FREQ 666 [DOVER 240.00] : C707_1pfault_Joslyn_trip_9L76_32

14 - FREQ 1263 [JOSLYN4 240.00] : C707_1pfault_Joslyn_trip_9L76_32

15 - FREQ 98503 [ELLSR 240.00] : C707_1pfault_Joslyn_trip_9L76_32

16 - FREQ 1288 [LIVOCK01 240.00] : C707_1pfault_Joslyn_trip_9L76_32

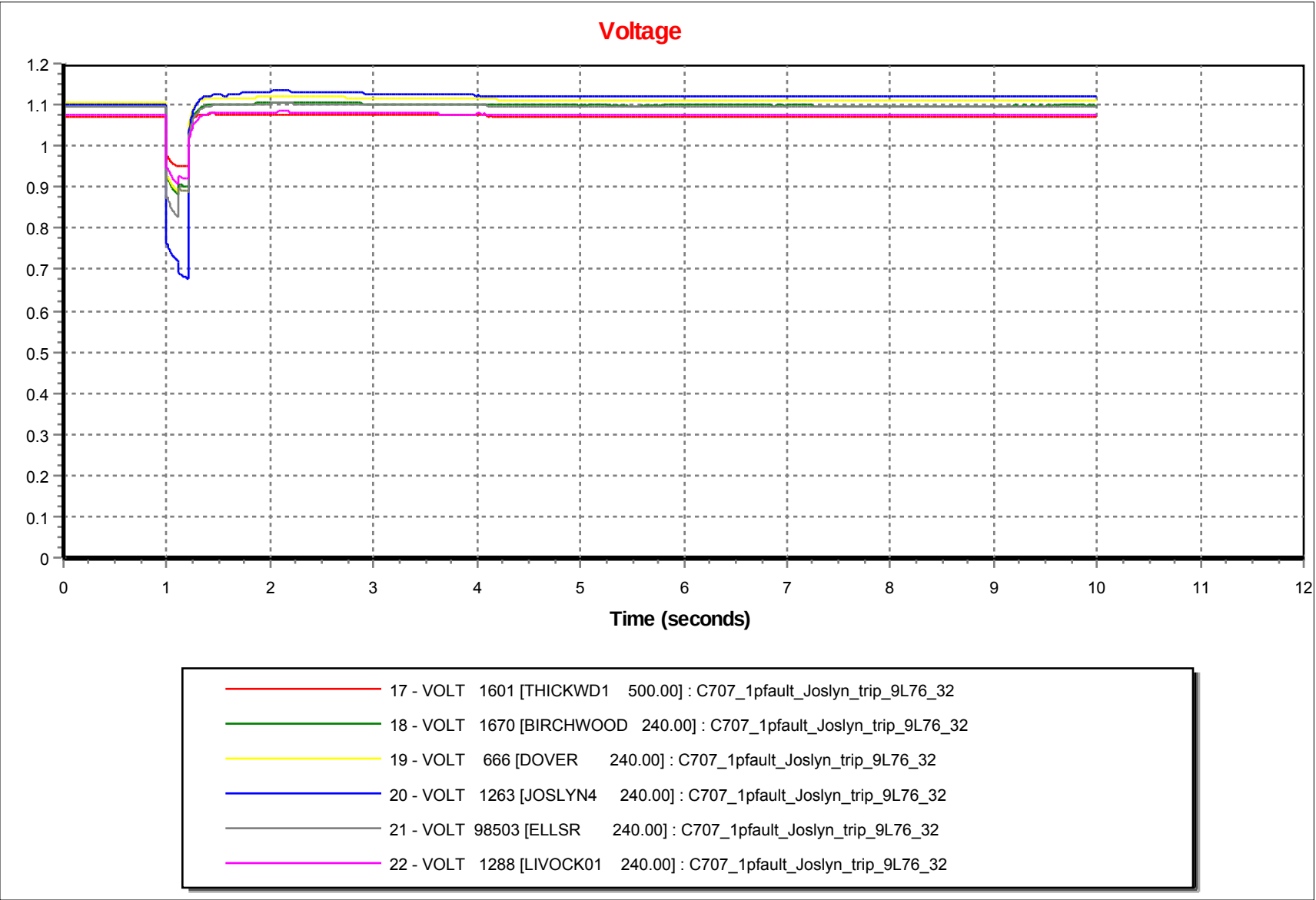
Voltage
1.2
1.1
1
0.9
0.8
0.7
0.6
0.5
0.4
0.3
0.2
0.1
0
0
1
2
3
4
5
6
7
8
9
10
11
12
Time (seconds)
17 - VOLT 1601 [THICKWD1 500.00] : C707_1pfault_Joslyn_trip_9L76_32
18 - VOLT 1670 [BIRCHWOOD 240.00] : C707_1pfault_Joslyn_trip_9L76_32
19 - VOLT 666 [DOVER 240.00] : C707_1pfault_Joslyn_trip_9L76_32
20 - VOLT 1263 [JOSLYN4 240.00] : C707_1pfault_Joslyn_trip_9L76_32
21 - VOLT 98503 [ELLSR 240.00] : C707_1pfault_Joslyn_trip_9L76_32
22 - VOLT 1288 [LIVOCK01 240.00] : C707_1pfault_Joslyn_trip_9L76_32

Relative Machine Angle

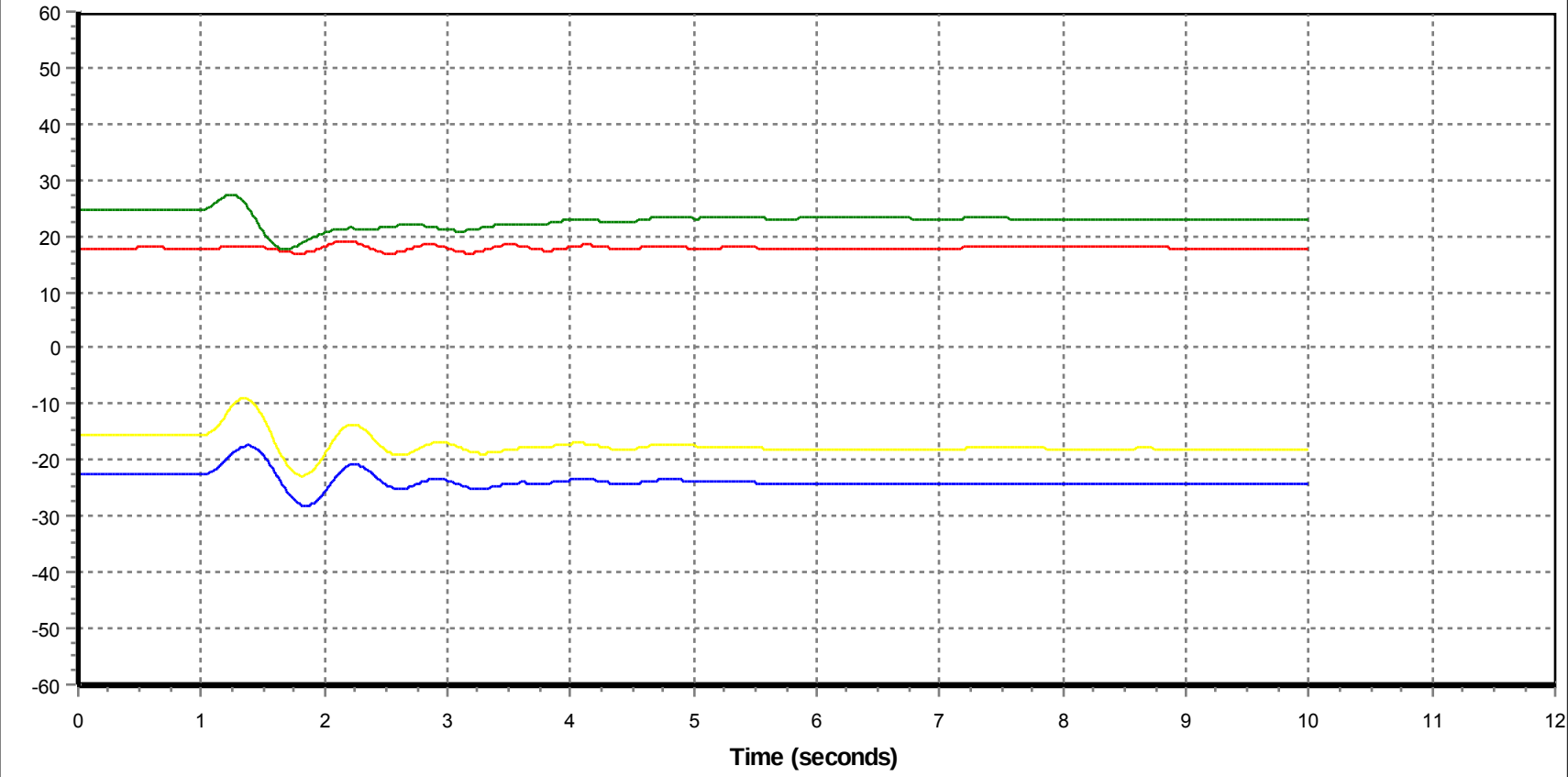

1 - ANGL 424[KEEP#2GN 19.000]2 : C708_1pfault_Joslyn_trip_9L09_66

2 - ANGL 18274[MACKAY2 18.000]1 : C708_1pfault_Joslyn_trip_9L09_66

3 - ANGL 3745[DOVERN 13.800]G1 : C708_1pfault_Joslyn_trip_9L09_66

4 - ANGL 19669[MRCP 13.800]1 : C708_1pfault_Joslyn_trip_9L09_66

Machine Power

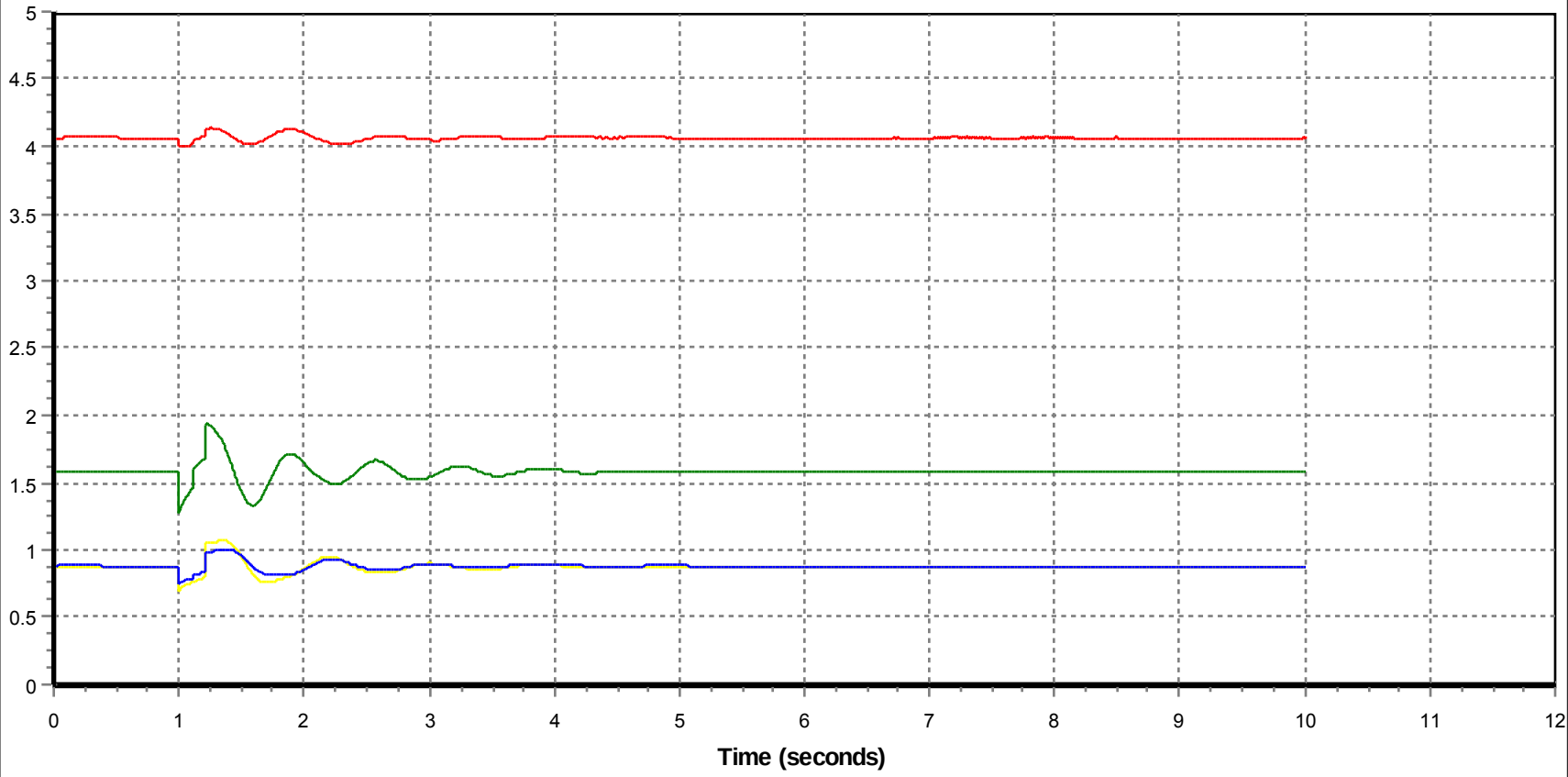

6 - POWR 424[KEEP#2GN 19.000]2 : C708_1pfault_Joslyn_trip_9L09_66

7 - POWR 18274[MACKAY2 18.000]1 : C708_1pfault_Joslyn_trip_9L09_66

8 - POWR 3745[DOVERN 13.800]G1 : C708_1pfault_Joslyn_trip_9L09_66

9 - POWR 19669[MRCP 13.800]1 : C708_1pfault_Joslyn_trip_9L09_66

Frequence Deviation

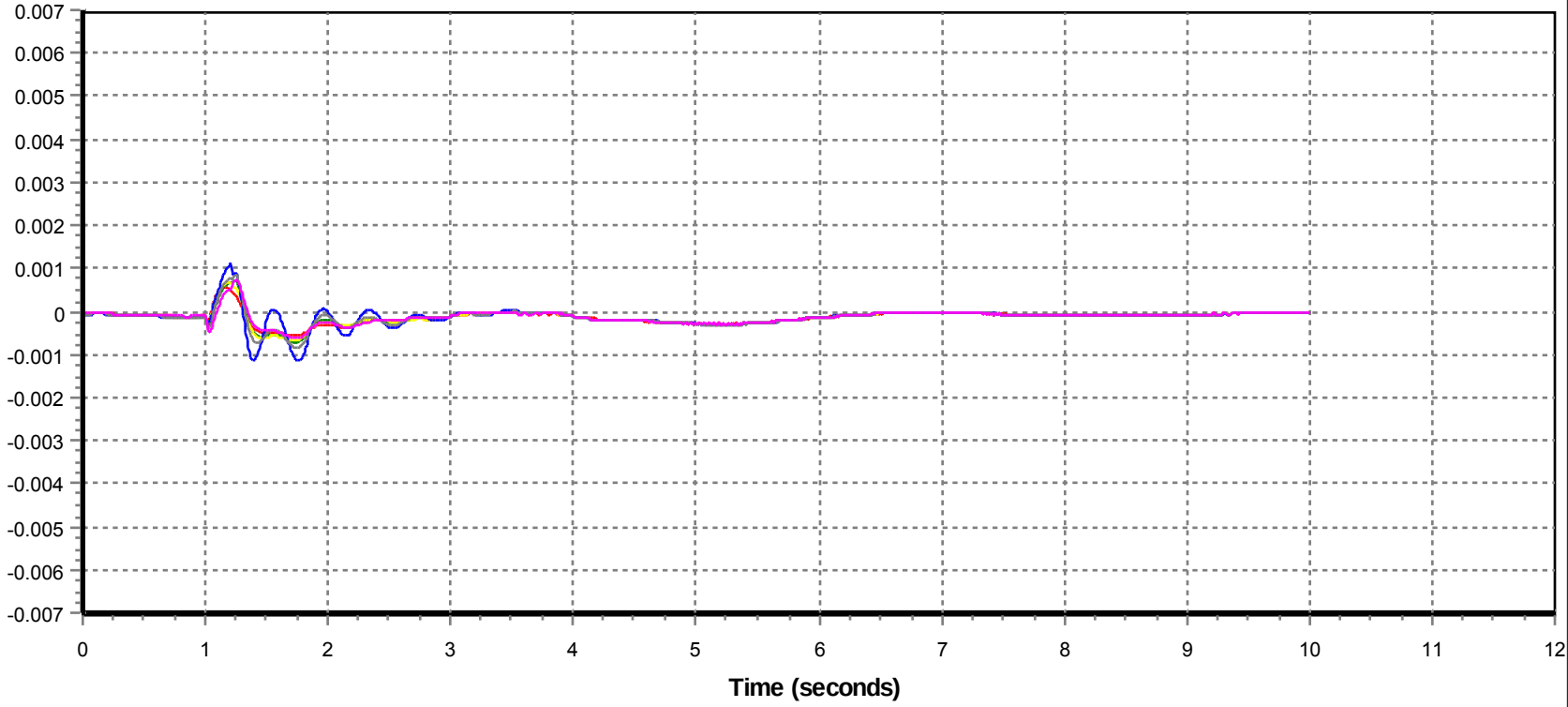

11 - FREQ 1601 [THICKWD1 500.00] : C708_1pfault_Joslyn_trip_9L09_66

12 - FREQ 1670 [BIRCHWOOD 240.00] : C708_1pfault_Joslyn_trip_9L09_66

13 - FREQ 666 [DOVER 240.00] : C708_1pfault_Joslyn_trip_9L09_66

14 - FREQ 1263 [JOSLYN4 240.00] : C708_1pfault_Joslyn_trip_9L09_66

15 - FREQ 98503 [ELLSR 240.00] : C708_1pfault_Joslyn_trip_9L09_66

16 - FREQ 1288 [LIVOCK01 240.00] : C708_1pfault_Joslyn_trip_9L09_66

Voltage

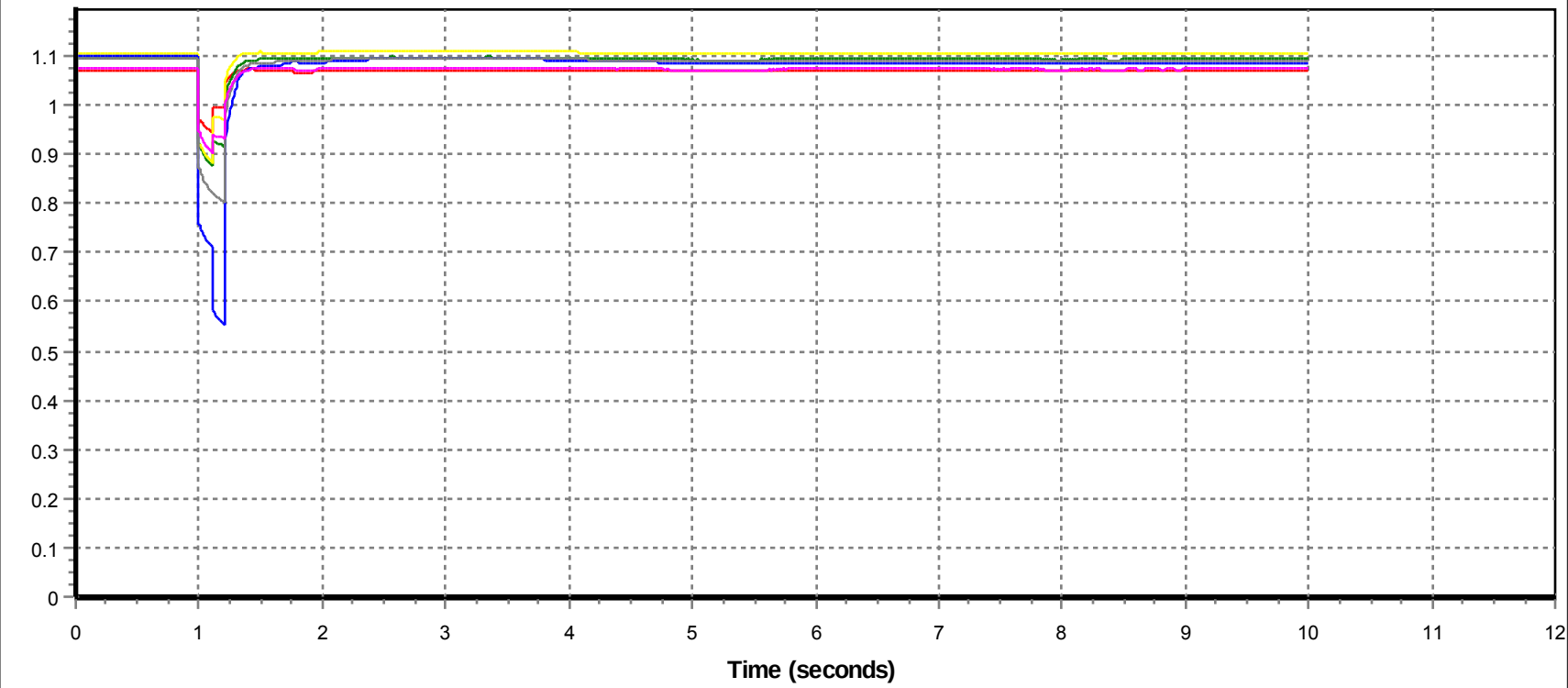

17 - VOLT 1601 [THICKWD1 500.00] : C708_1pfault_Joslyn_trip_9L09_66

18 - VOLT 1670 [BIRCHWOOD 240.00] : C708_1pfault_Joslyn_trip_9L09_66

19 - VOLT 666 [DOVER 240.00] : C708_1pfault_Joslyn_trip_9L09_66

20 - VOLT 1263 [JOSLYN4 240.00] : C708_1pfault_Joslyn_trip_9L09_66

21 - VOLT 98503 [ELLSR 240.00] : C708_1pfault_Joslyn_trip_9L09_66

22 - VOLT 1288 [LIVOCK01 240.00] : C708_1pfault_Joslyn_trip_9L09_66

Relative Machine Angle

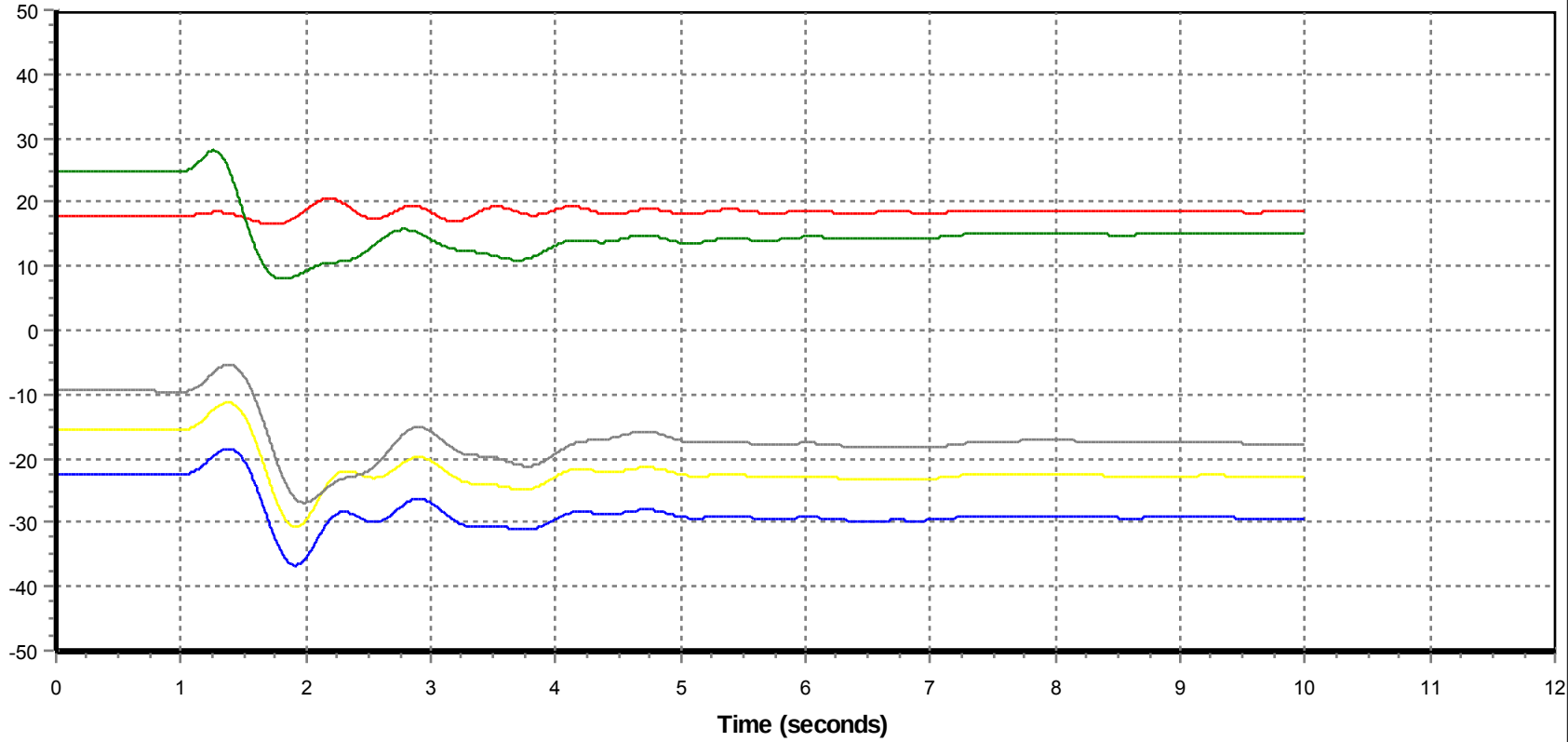

1 - ANGL 424[KEEP#2GN 19.000]2 : C709_1pfault_TW_trip_9L30_500KV

2 - ANGL 18274[MACKAY2 18.000]1 : C709_1pfault_TW_trip_9L30_500KV

3 - ANGL 3745[DOVERN 13.800]G1 : C709_1pfault_TW_trip_9L30_500KV

4 - ANGL 19669[MRCP 13.800]1 : C709_1pfault_TW_trip_9L30_500KV

5 - ANGL 10236[MUSKEG4 13.800]1 : C709_1pfault_TW_trip_9L30_500KV

Machine Power

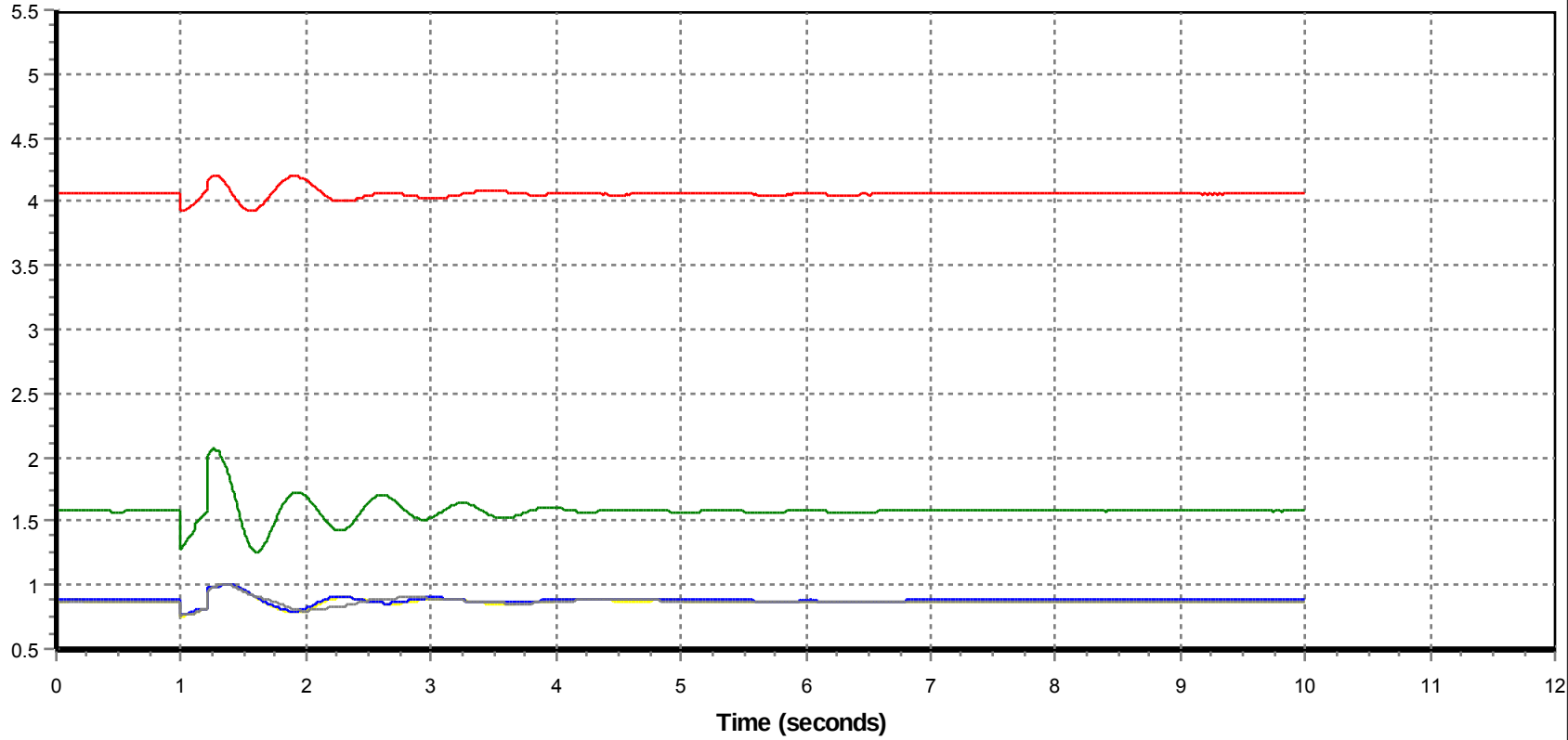

6 - POWR 424[KEEP#2GN 19.000]2 : C709_1pfault_TW_trip_9L30_500KV

7 - POWR 18274[MACKAY2 18.000]1 : C709_1pfault_TW_trip_9L30_500KV

8 - POWR 3745[DOVERN 13.800]G1 : C709_1pfault_TW_trip_9L30_500KV

9 - POWR 19669[MRCP 13.800]1 : C709_1pfault_TW_trip_9L30_500KV

10 - POWR 10236[MUSKEG4 13.800]1 : C709_1pfault_TW_trip_9L30_500KV

Frequence Deviation

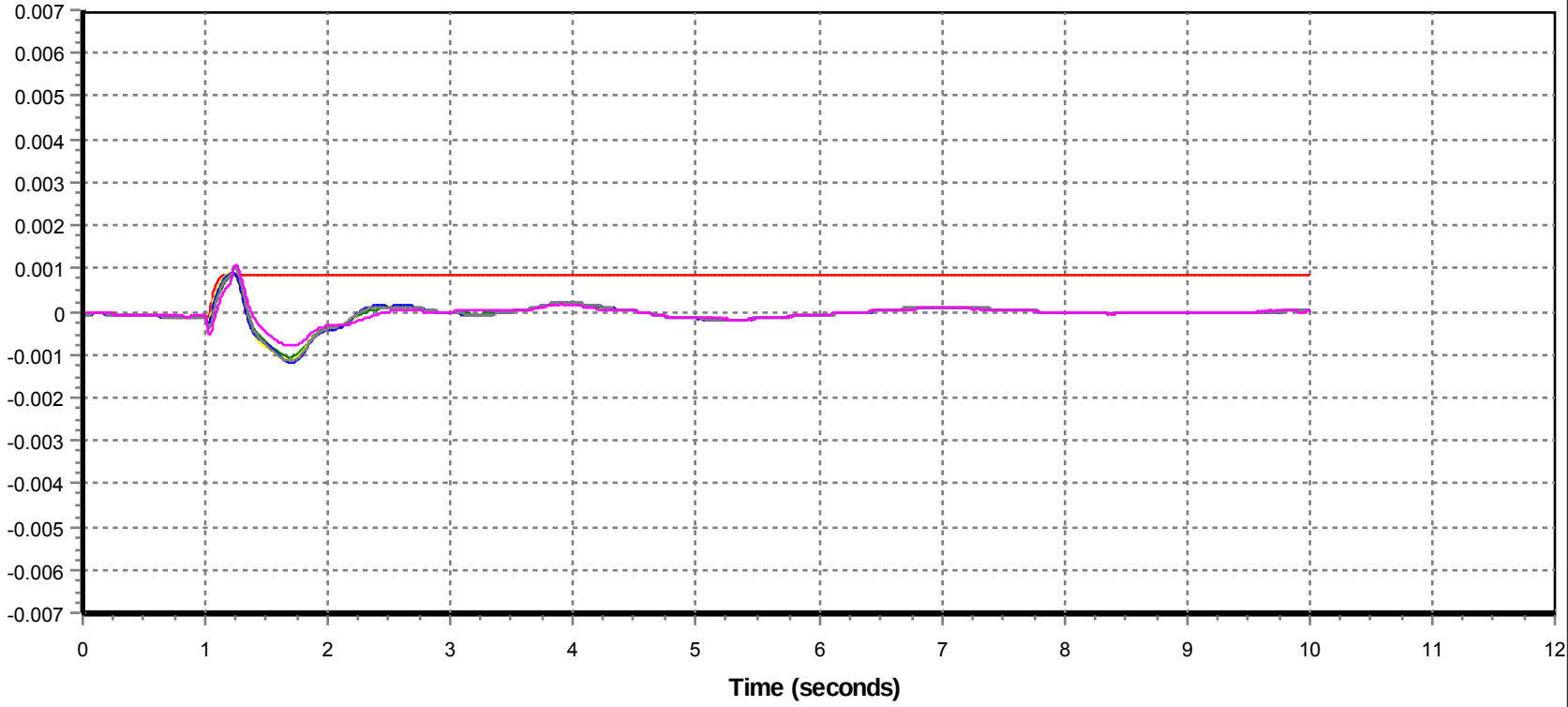

11 - FREQ 1601 [THICKWD1 500.00] : C709_1pfault_TW_trip_9L30_500KV

12 - FREQ 1670 [BIRCHWOOD 240.00] : C709_1pfault_TW_trip_9L30_500KV

13 - FREQ 666 [DOVER 240.00] : C709_1pfault_TW_trip_9L30_500KV

14 - FREQ 1263 [JOSLYN4 240.00] : C709_1pfault_TW_trip_9L30_500KV

15 - FREQ 98503 [ELLSR 240.00] : C709_1pfault_TW_trip_9L30_500KV

16 - FREQ 1288 [LIVOCK01 240.00] : C709_1pfault_TW_trip_9L30_500KV

Voltage

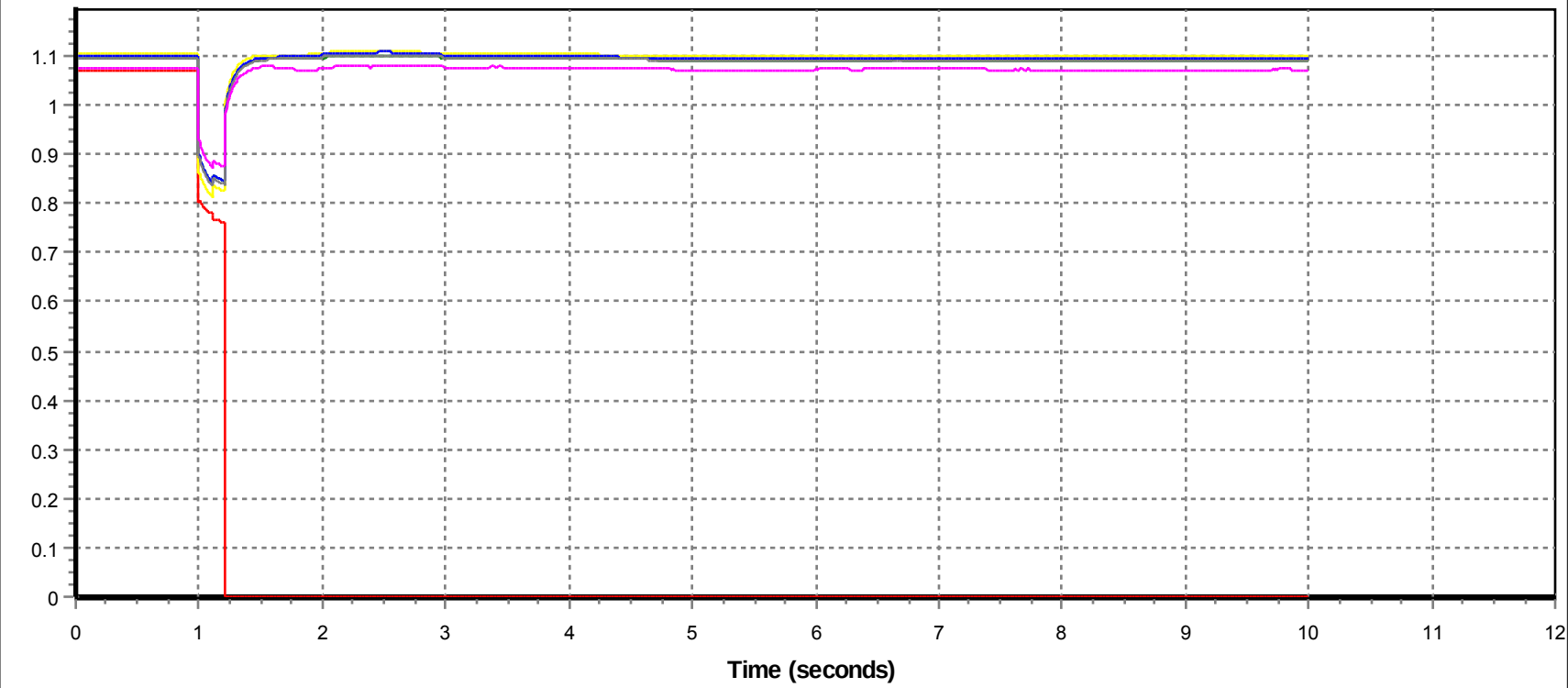

17 - VOLT 1601 [THICKWD1 500.00] : C709_1pfault_TW_trip_9L30_500KV

18 - VOLT 1670 [BIRCHWOOD 240.00] : C709_1pfault_TW_trip_9L30_500KV

19 - VOLT 666 [DOVER 240.00] : C709_1pfault_TW_trip_9L30_500KV

20 - VOLT 1263 [JOSLYN4 240.00] : C709_1pfault_TW_trip_9L30_500KV

21 - VOLT 98503 [ELLSR 240.00] : C709_1pfault_TW_trip_9L30_500KV

22 - VOLT 1288 [LIVOCK01 240.00] : C709_1pfault_TW_trip_9L30_500KV

ATTACHMENT K
Long Term Sensitivity Analysis

Table K-1 Power Flow Analysis Summary- 2020 Sensitivity case with NW FMM

Figure Kame	Contingency	Thermal Violation	Voltage Violation
Figure K-2020Sens-1	Base Case (N - 0)	None	None
Figure K-2020Sens-2	Open 9L56 240kV line (WABASCA 720S to Brintnell 876S)	None	None
Figure K-2020Sens-3	Open 9L15 240kV line (Wesley Creek 834S to Livock 939S)	None	None
Figure K-2020Sens-4	Open 9L10 240kV line (Brintnell 876S to Livock 939S)	None	None
Figure K-2020Sens-5	Open 9L57 240kV line (Livock 939S to Birchwood Creek 960S)	None	None
Figure K-2020Sens-6	Open 9L74 240kV line (Birchwood Creek 960S to Dover 888S)	None	None
Figure K-2020Sens-7	Open 9L95 240kV line (Birchwood Creek 960S to EllsRiver)	None	None
Figure K-2020Sens-8	Open 9L09 240kV line (Dover 888S to Joslyn Creek 849S)	None	None
Figure K-2020Sens-9	Open 9L08 240kV line (Ells River to to Dover 888S)	None	None
Figure K-2020Sens-10	Open 9L76 240kV line (Ells River to Joslyn Creek 849S)	None	None
Figure K-2020Sens-11	Open 9L32 240kV line (Joslyn Creek 849S to Bitumont 941S)	None	None
Figure K-2020Sens-12	Open 9L01 240kV line (Dover 888S to Ruth Lake 848S)	None	None
Figure K-2020Sens-13	Open 9L18 and 9L23 240kV line (Ruth Lake 848S to Salt Creek 977S)	None	None
Figure K-2020Sens-14	Open 9L990 240kV line (Salt Creek 977S to Kinosis 856S)	None	None
Figure K-2020Sens-15	Open 9L990 240kV line (Kinosis 856S to Leismer 72S)	None	None
Figure K-2020Sens-16	Open 9L930 240kV line (Leismer 72S to Whitefish Lake 825S)	None	None
Figure K-2020Sens-17	Open 9L22 240kV line (Whitefish Lake 825S to Heart Lake 898S)	None	None
Figure K-2020Sens-18	Open 9L47 240kV line (Heart Lake 898S to RoundHill POD)	None	None
Figure K-2020Sens-19	Open 9L55 240kV line (RoundHill POD to McMillan 885S)	None	None
Figure K-2020Sens-20	Open 9L07 240kV line (McMillan 885S TO Dover 888S)	None	None

Figure K-2020Sens-21	Open 9L58 240kV line (Ruth Lake 848S to Thickwood 951S)	None	None
Figure K-2020Sens-22	Open 9L68 240kV line (Thickwood 951S TO Dover 888S)	None	None
Figure K-2020Sens-23	Open 9L30 240kV line (McMillan 885S TO Dover 888S)	None	None
Figure K-2020Sens-24	Open 500kV line (Thickwood 951S TO Genesee)	None	None

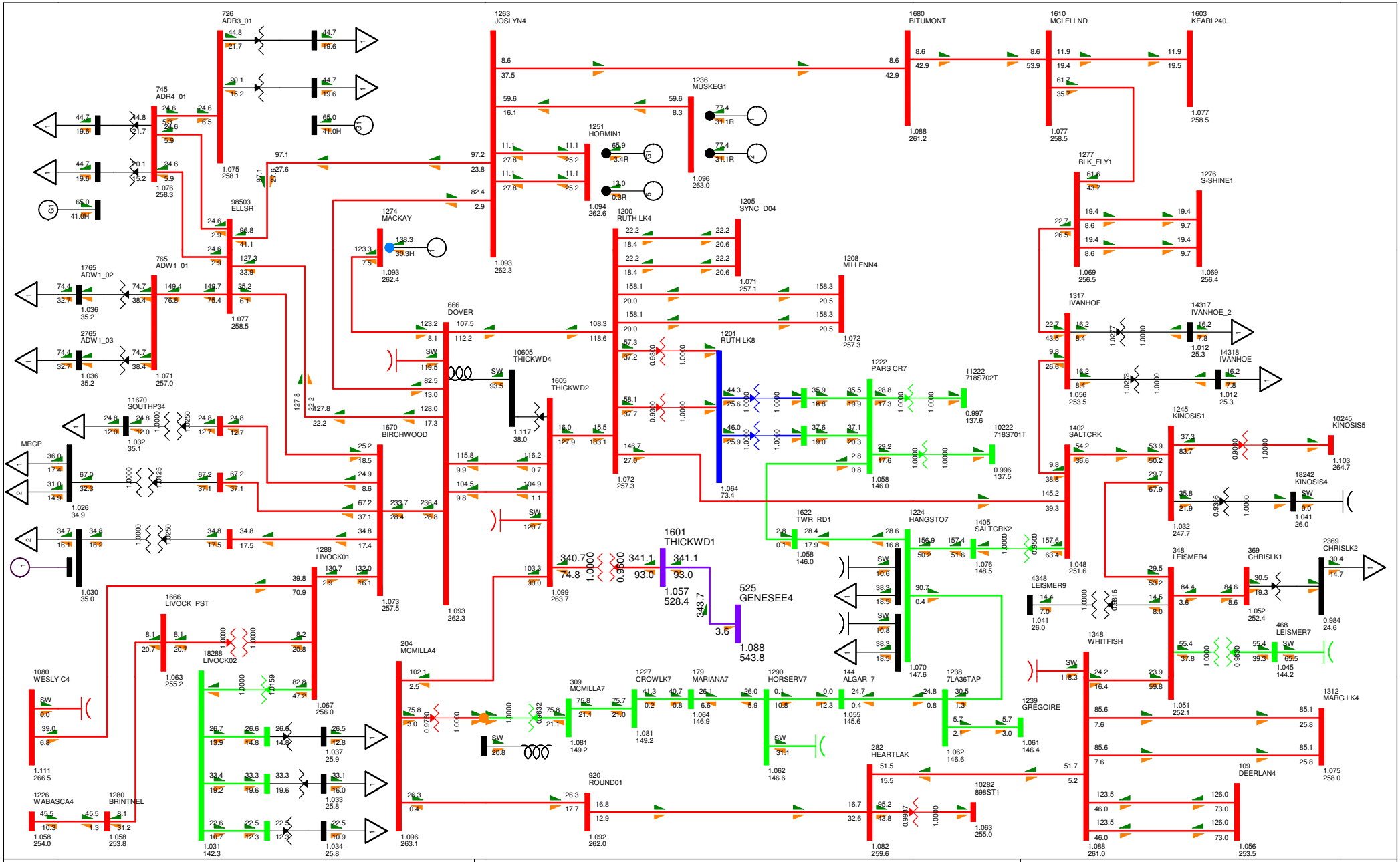

BC - Alberta (IMPORT)787.2 MW

TASMO MODEL; OUTPUT GENERATED 2010-03-01 14:06:46
SWINGBUS 1520 FOR FC-2009-S-2021-04-30:19:24--1--1-0-0
FRI, AUG 12 2011 16:42

2020 NW FMM STUDY

Figure K-2020Sens-1

Bus - VOLTAGE (kV/PU)
Branch - MW/Mvar
Equipment - MW/Mvar

100.0%RATEB
1.120OV 0.950UV
kV: <=34.500 <=69.000 <=138.000 <=240.000 <=500.000 >500.000

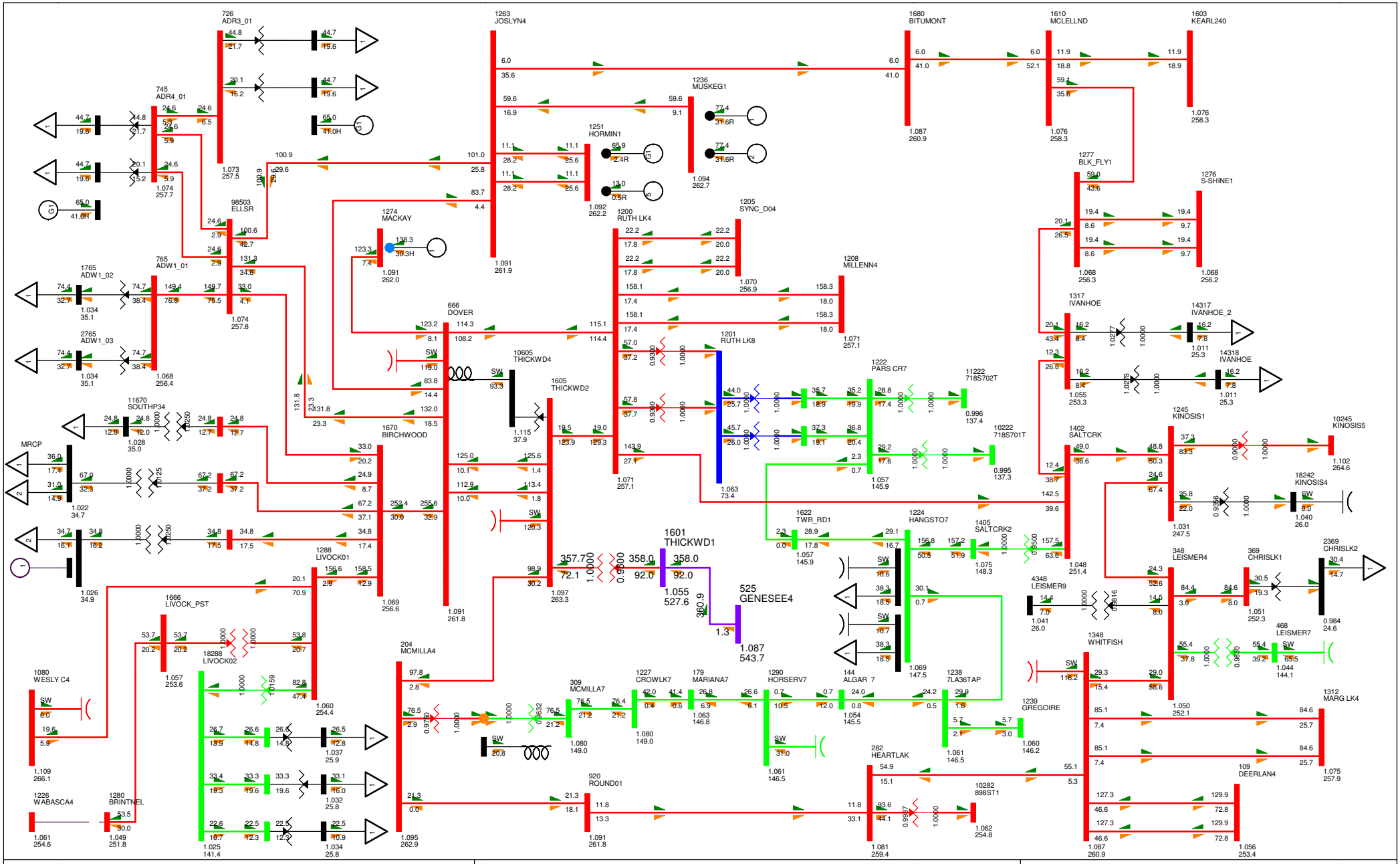

BC - Alberta (IMPORT)788.4 MW

TASMO MODEL; OUTPUT GENERATED 2010-03-01 14:06:46
SWINGBUS 1520 FOR FC-2009-S-2021-04-30:19:24--1--1-0-0
FRI, AUG 12 2011 16:42

2020 NW FMM STUDY

Figure K-2020Sens-2

Bus - VOLTAGE (kV/PU)
Branch - MW/Mvar
Equipment - MW/Mvar
100.0%RATEB
1.120OV 0.950UV
kV: <=34.500 <=69.000 <=138.000 <=240.000 <=500.000 >500.000

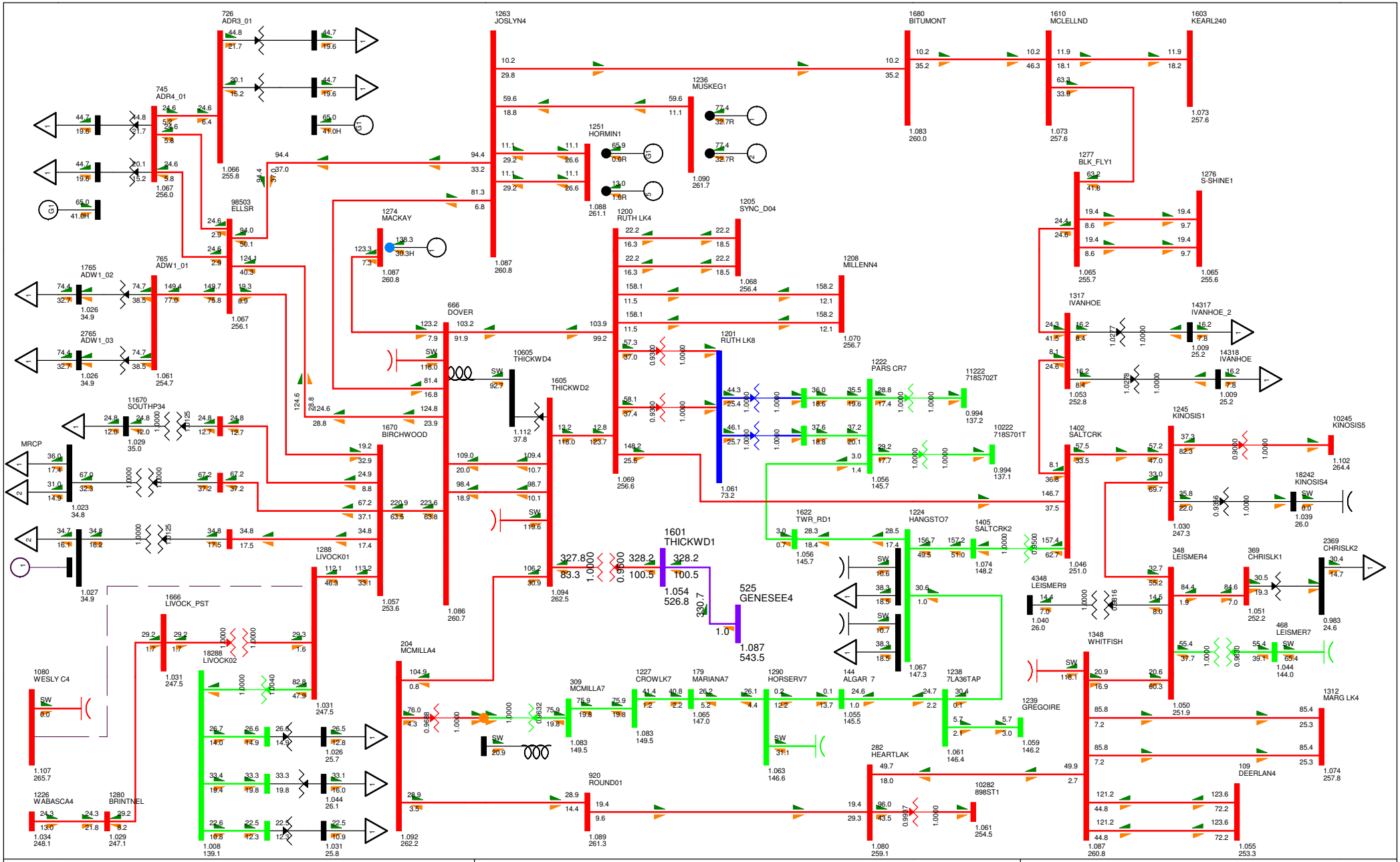
726 ADR3_01
745 ADR4_01
1263 JOSLYN4
1680 BITUMONT
1610 MCLELLND
1603 KEARL240
1236 MUSKEG1
1251 HORMIN1
1277 BLK_FLY1
1276 S-SHINE1
98503 ELLSR
1274 MACKAY
1200 RUTH LK4
1205 SYNC_D04
1765 ADW1_02
765 ADW1_01
2765 ADW1_03
666 DOVER
1208 MILLENN4
1317 IVANHOE
14317 IVANHOE_2
14318 IVANHOE
1201 RUTH LK8
1222 PARS CR7
11222 718S702T
10222 718S701T
10605 THICKWD4
1605 THICKWD2
11670 SOUTHP34
MRCP
1670 BIRCHWOOD
1402 SALTCRK
1245 KINOSIS1
10245 KINOSIS5
18242 KINOSIS4
1622 TWR_RD1
1224 HANGSTO7
1405 SALTCRK2
4348 LEISMER9
348 LEISMER4
369 CHRISLK1
2369 CHRISLK2
468 LEISMER7
1601 THICKWD1
525 GENESEE4
1288 LIVOCK01
1666 LIVOCK_PST
18288 LIVOCK02
204 MCMILLA4
309 MCMILLA7
1227 CROWLK7
179 MARIANA7
1290 HORSERV7
144 ALGAR 7
1238 7LA36TAP
1239 GREGOIRE
1348 WHITFISH
1312 MARG LK4
109 DEERLAN4
282 HEARTLAK
920 ROUND01
10282 898ST1
1080 WESLY C4
1226 WABASCA4
1280 BRINTNEL
BC - Alberta (IMPORT)790.9 MW
TASMO MODEL; OUTPUT GENERATED 2010-03-01 14:06:46
SWINGBUS 1520 FOR FC-2009-S-2021-04-30:19:24--1--1-0-0
FRI, AUG 12 2011 16:42
2020 NW FMM STUDY
Figure K-2020Sens-3
Bus - VOLTAGE (kV/PU)
Branch - MW/Mvar
Equipment - MW/Mvar
100.0%RATEB
1.120OV 0.950UV
kV: <=34.500 <=69.000 <=138.000 <=240.000 <=500.000 >500.000

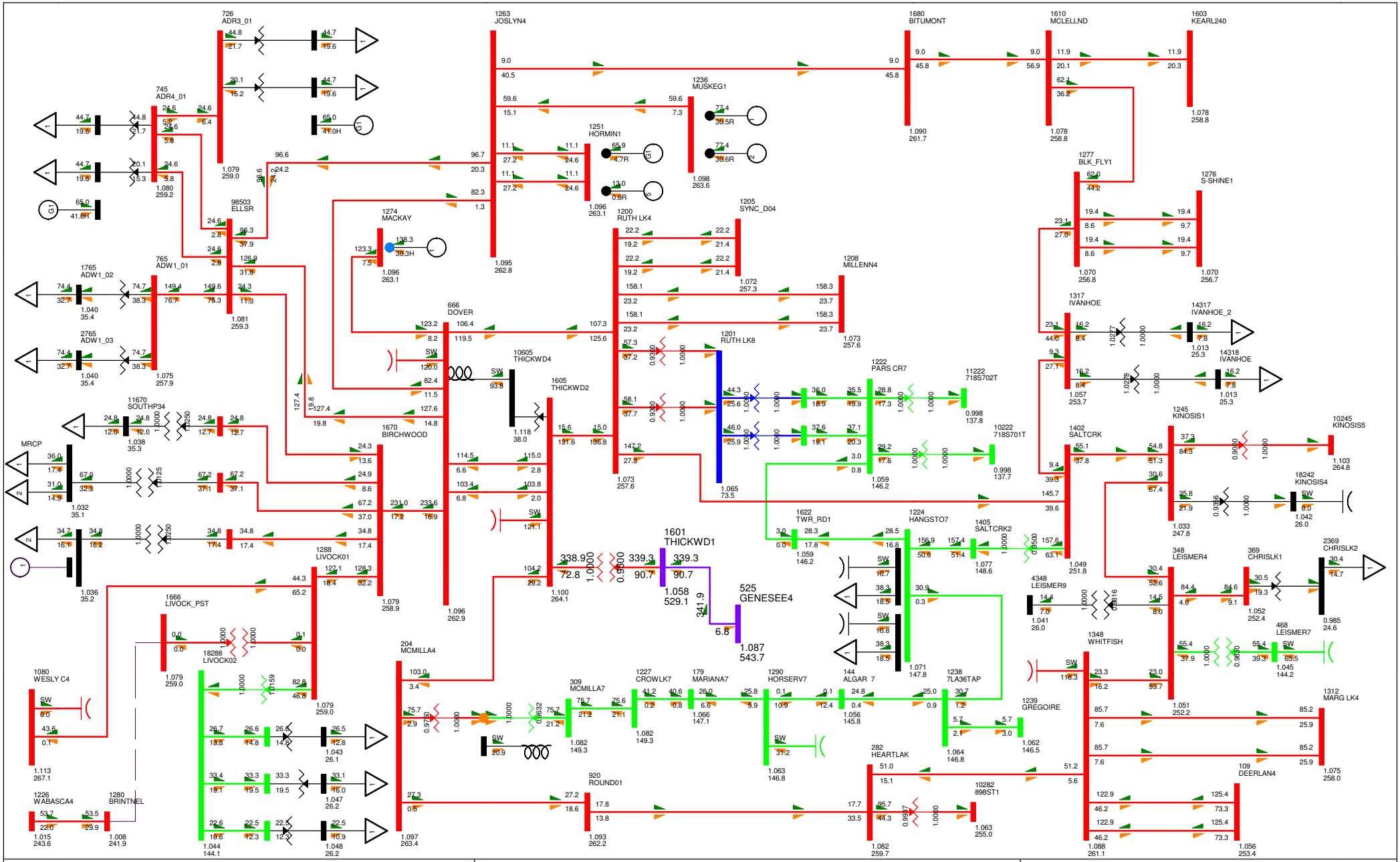
726 ADR3_01
745 ADR4_01
765 ADW1_01
1765 ADW1_02
2765 ADW1_03
98503 ELLSR
1263 JOSLYN4
1680 BITUMONT
1610 MCLELLND
1603 KEARL240
1236 MUSKEG1
1251 HORMIN1
1277 BLK_FLY1
1276 S-SHINE1
1274 MACKAY
1200 RUTH LK4
1205 SYNC_D04
1208 MILLENN4
1317 IVANHOE
14317 IVANHOE_2
14318 IVANHOE
666 DOVER
1201 RUTH LK8
1222 PARS CR7
11222 718S702T
10222 718S701T
10605 THICKWD4
1605 THICKWD2
1670 BIRCHWOOD
11670 SOUTHP34
MRCP
1601 THICKWD1
525 GENESEE4
1622 TWR_RD1
1224 HANGSTO7
1405 SALTCRK2
1402 SALTCRK
1245 KINOSIS1
10245 KINOSIS5
18242 KINOSIS4
348 LEISMER4
4348 LEISMER9
369 CHRISLK1
2369 CHRISLK2
468 LEISMER7
1348 WHITFISH
1239 GREGOIRE
1312 MARG LK4
109 DEERLAN4
1288 LIVOCK01
1666 LIVOCK_PST
18288 LIVOCK02
204 MCMILLA4
309 MCMILLA7
1227 CROWLK7
179 MARIANA7
1290 HORSERV7
144 ALGAR 7
1238 7LA36TAP
282 HEARTLAK
920 ROUND01
10282 898ST1
1080 WESLY C4
1226 WABASCA4
1280 BRINTNEL
1008 241.9
1113 267.1
1015 243.6
1044 144.1
1097 263.4
1093 262.2
1082 259.7
1063 255.0
1088 261.1
1056 253.4
1051 252.2
1033 247.8
1042 26.0
1103 264.8
1041 26.0
1052 252.4
1045 144.2
1075 258.0
1062 146.5
1064 146.8
1063 146.8
1056 145.8
1071 147.8
1059 146.2
1077 148.6
1049 251.8
1059 146.2
1073 257.6
1065 73.5
1059 146.2
1073 257.6
1072 257.3
1098 263.6
1096 263.1
1095 262.8
1090 261.7
1078 258.8
1078 258.8
1070 256.8
1070 256.7
1057 253.7
1013 25.3
1013 25.3
1096 263.1
1096 262.9
1100 264.1
1118 38.0
1079 258.9
1081 259.3
1075 257.9
1040 35.4
1040 35.4
1038 35.3
1032 35.1
1036 35.2
1079 259.0
1079 259.0
1043 26.1
1047 26.2
1048 26.2
1044 144.1
1079 259.2
1080 259.2
1079 259.0
1096 263.1
1098 263.6
1078 258.8
1090 261.7
1078 258.8
1070 256.8
1070 256.7
1057 253.7
1013 25.3
1013 25.3
1033 247.8
1042 26.0
1103 264.8
1041 26.0
1052 252.4
1045 144.2
1075 258.0
1062 146.5
1064 146.8
1063 146.8
1056 145.8
1071 147.8
1059 146.2
1077 148.6
1049 251.8
1059 146.2
1073 257.6
1065 73.5
1059 146.2
1073 257.6
1072 257.3
1098 263.6
1096 263.1
1095 262.8
1090 261.7
1078 258.8

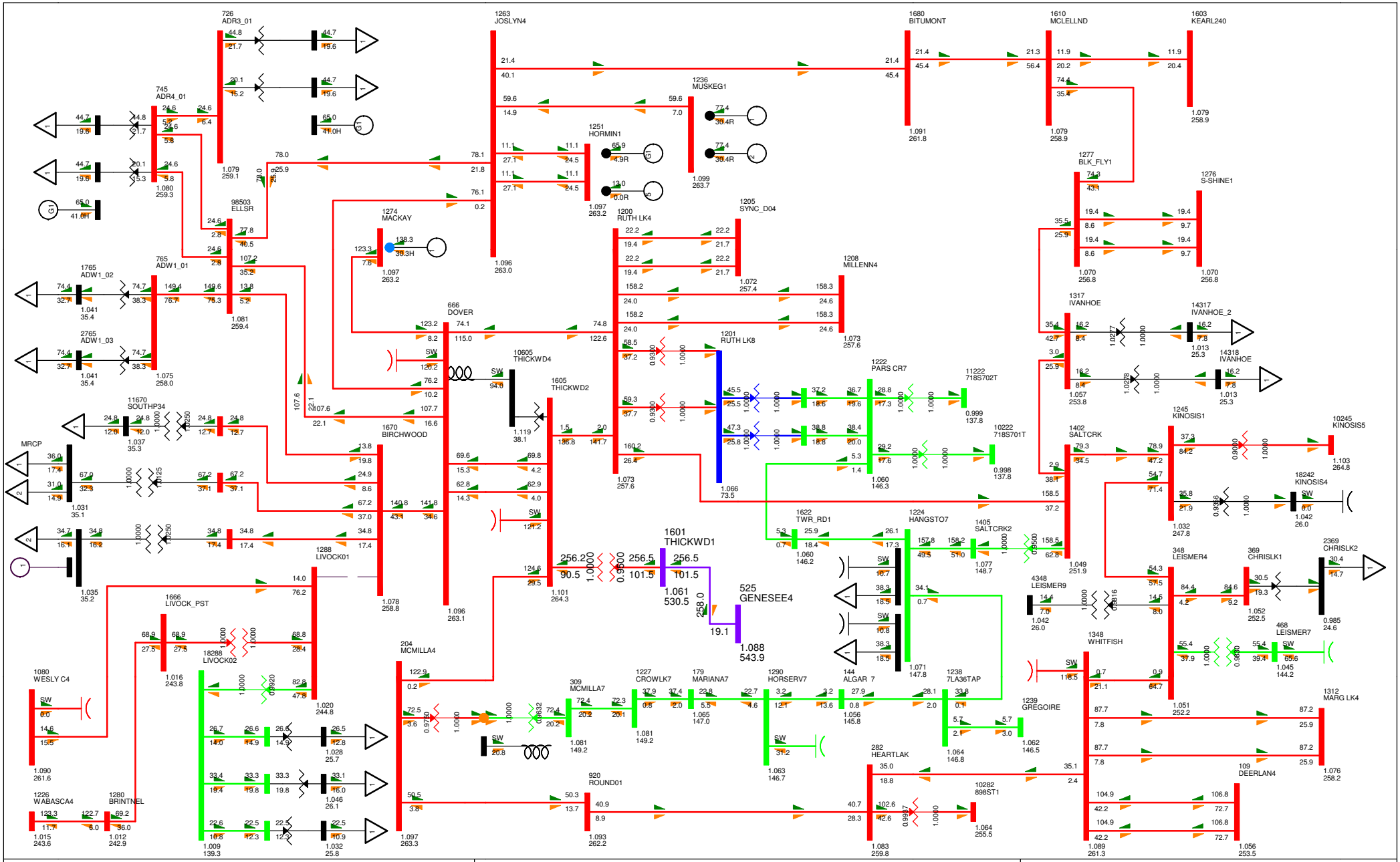
726 ADR3_01
745 ADR4_01
1263 JOSLYN4
1680 BITUMONT
1610 MCLELLND
1603 KEARL240
1236 MUSKEG1
1251 HORMIN1
1277 BLK_FLY1
1276 S-SHINE1
98503 ELLSR
1274 MACKAY
1200 RUTH LK4
1205 SYNC_D04
1208 MILLENN4
1765 ADW1_02
765 ADW1_01
2765 ADW1_03
666 DOVER
1201 RUTH LK8
1222 PARS CR7
11222 718S702T
10222 718S701T
1317 IVANHOE
14317 IVANHOE_2
14318 IVANHOE
10605 THICKWD4
1605 THICKWD2
1670 BIRCHWOOD
11670 SOUTHP34
MRCP
1402 SALTCRK
1245 KINOSIS1
10245 KINOSIS5
18242 KINOSIS4
1622 TWR_RD1
1224 HANGSTO7
1405 SALTCRK2
1601 THICKWD1
525 GENESEE4
1288 LIVOCK01
1666 LIVOCK_PST
18288 LIVOCK02
4348 LEISMER9
348 LEISMER4
369 CHRISLK1
2369 CHRISLK2
468 LEISMER7
1348 WHITFISH
1239 GREGOIRE
1312 MARG LK4
109 DEERLAN4
204 MCMILLA4
309 MCMILLA7
1227 CROWLK7
179 MARIANA7
1290 HORSERV7
144 ALGAR 7
1238 7LA36TAP
282 HEARTLAK
10282 898ST1
920 ROUND01
1080 WESLY C4
1226 WABASCA4
1280 BRINTNEL
1012 242.9
1015 243.6
1090 261.6
1009 139.3
1016 243.8
1020 244.8
1028 25.7
1046 26.1
1032 25.8
1097 263.3
1093 262.2
1083 259.8
1064 255.5
1089 261.3
1056 253.5
1051 252.2
1052 252.5
1042 26.0
1045 144.2
1076 258.2
1062 146.5
1064 146.8
1063 146.7
1065 147.0
1081 149.2
1056 145.8
1071 147.8
1060 146.3
1073 257.6
1072 257.4
1066 73.5
1101 264.3
1096 263.1
1078 258.8
1035 35.2
1031 35.1
1037 35.3
1041 35.4
1075 258.0
1081 259.4
1080 259.3
1079 259.1
1097 263.2
1096 263.0
1099 263.7
1091 261.8
1079 258.9
1070 256.8
1057 253.8
1013 25.3
1103 264.8
1042 26.0
1032 247.8
1049 251.9
1060 146.2
1077 148.7
1085 259.8
1064 146.8
1062 146.5
1056 253.5
1076 258.2
1051 252.2
1045 144.2
1052 252.5
1042 26.0
1089 261.3
1064 255.5
1083 259

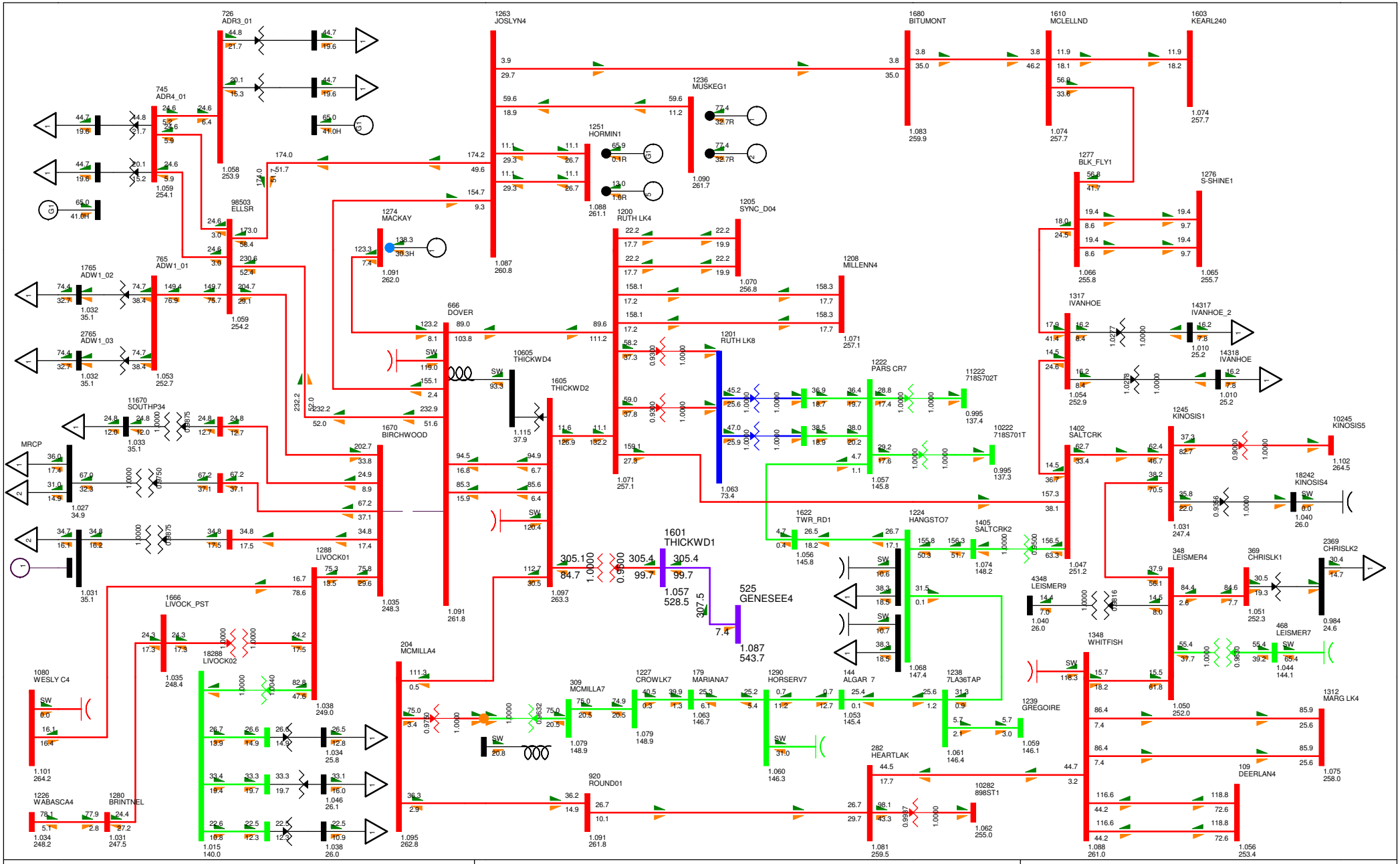

Figure K-2020Sens-6

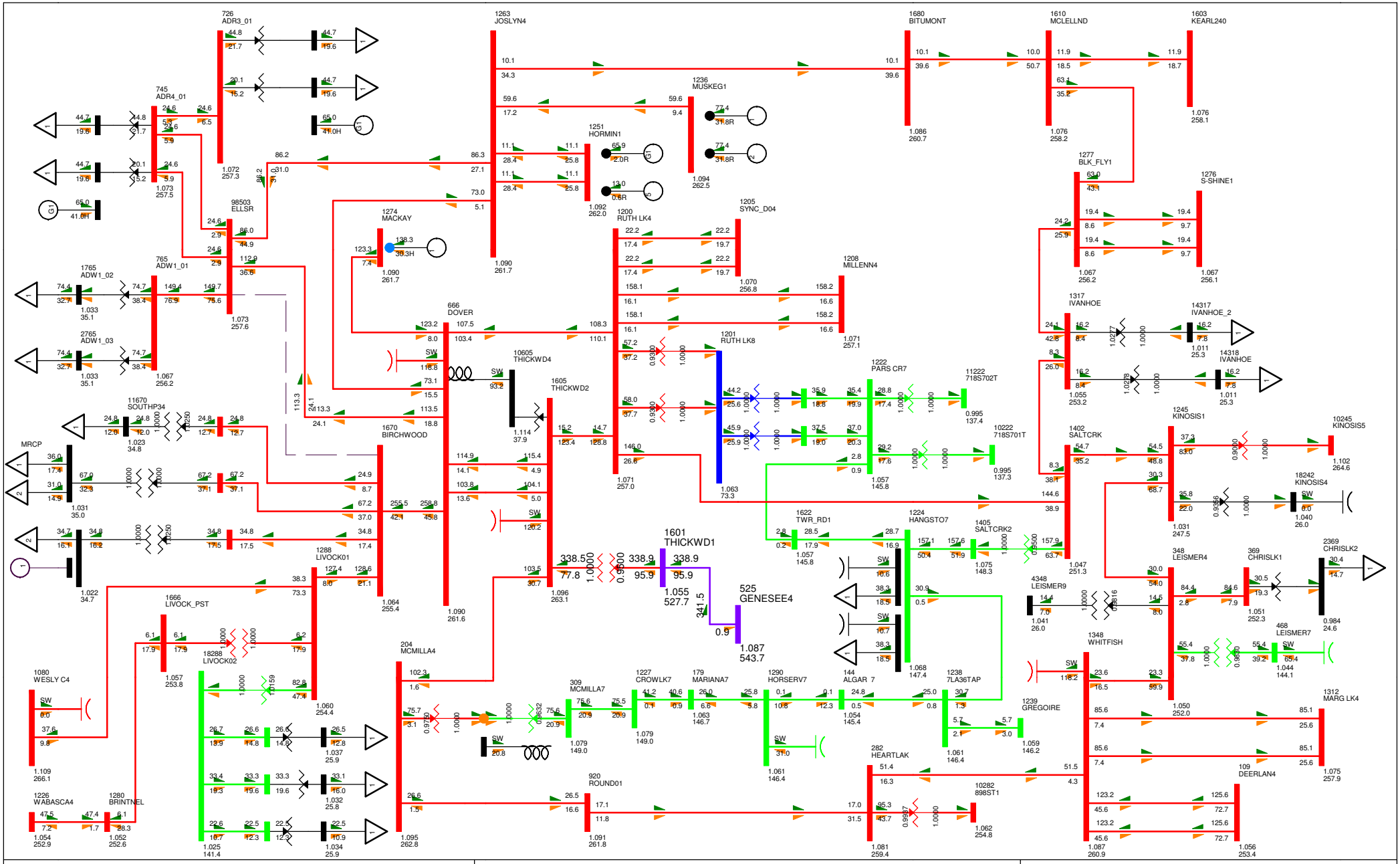

BC - Alberta (IMPORT)788.1 MW

TASMO MODEL; OUTPUT GENERATED 2010-03-01 14:06:46
SWINGBUS 1520 FOR FC-2009-S-2021-04-30:19:24--1--1-0-0
FRI, AUG 12 2011 16:43

2020 NW FMM STUDY

Figure K-2020Sens-7

Bus - VOLTAGE (kV/PU)
Branch - MW/Mvar
Equipment - MW/Mvar
100.0%RATEB
1.120OV 0.950UV
kV: <=34.500 <=69.000 <=138.000 <=240.000 <=500.000 >500.000

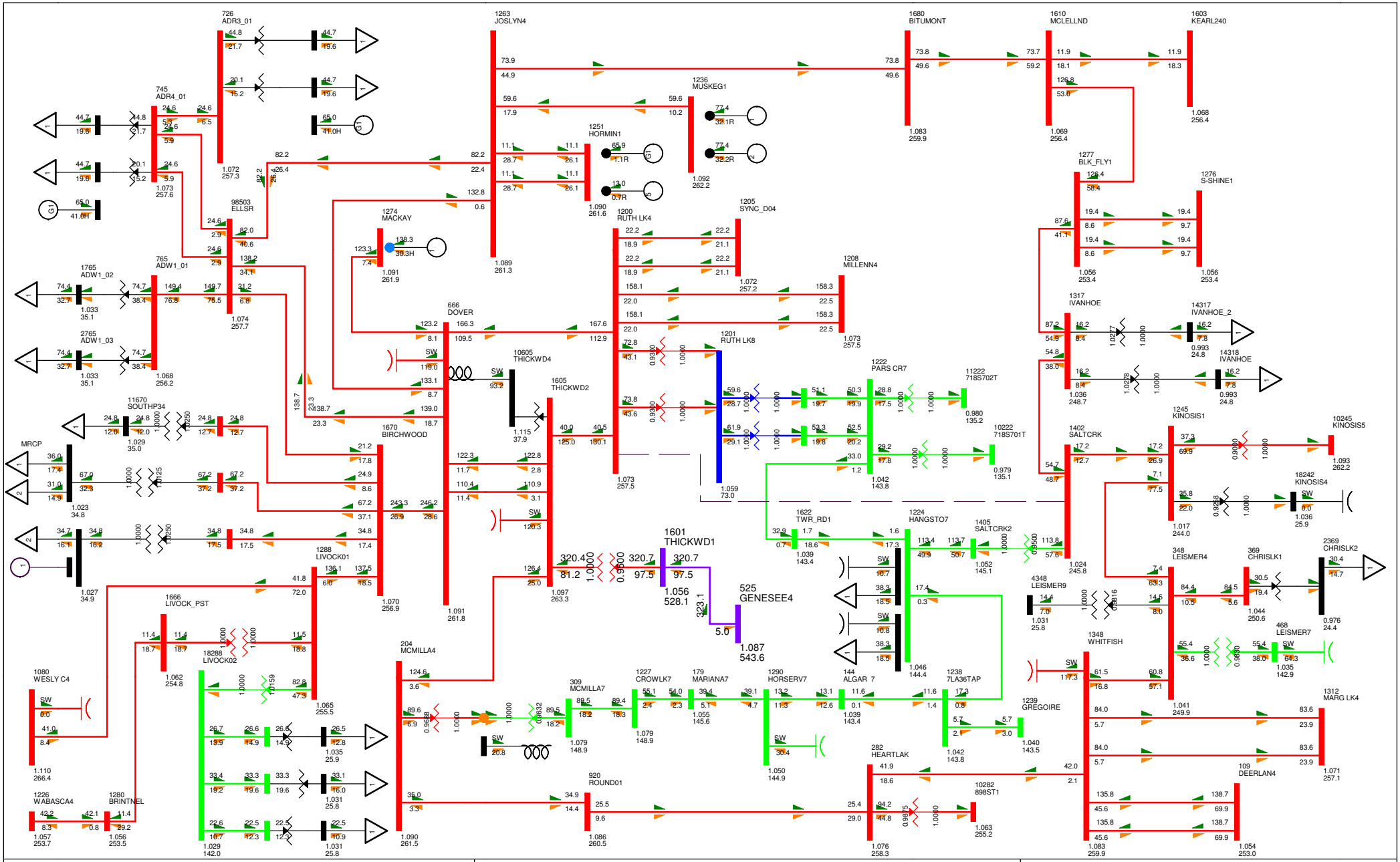

BC - Alberta (IMPORT)791.6 MW

TASMO MODEL; OUTPUT GENERATED 2010-03-01 14:06:46
SWINGBUS 1520 FOR FC-2009-S-2021-04-30:19:24--1--1-0-0
FRI, AUG 12 2011 16:43

2020 NW FMM STUDY

Figure K-2020Sens-8

Bus - VOLTAGE (kV/PU)
Branch - MW/Mvar
Equipment - MW/Mvar
100.0%RATEB
1.120OV 0.950UV
kV: <=34.500 <=69.000 <=138.000 <=240.000 <=500.000 >500.000

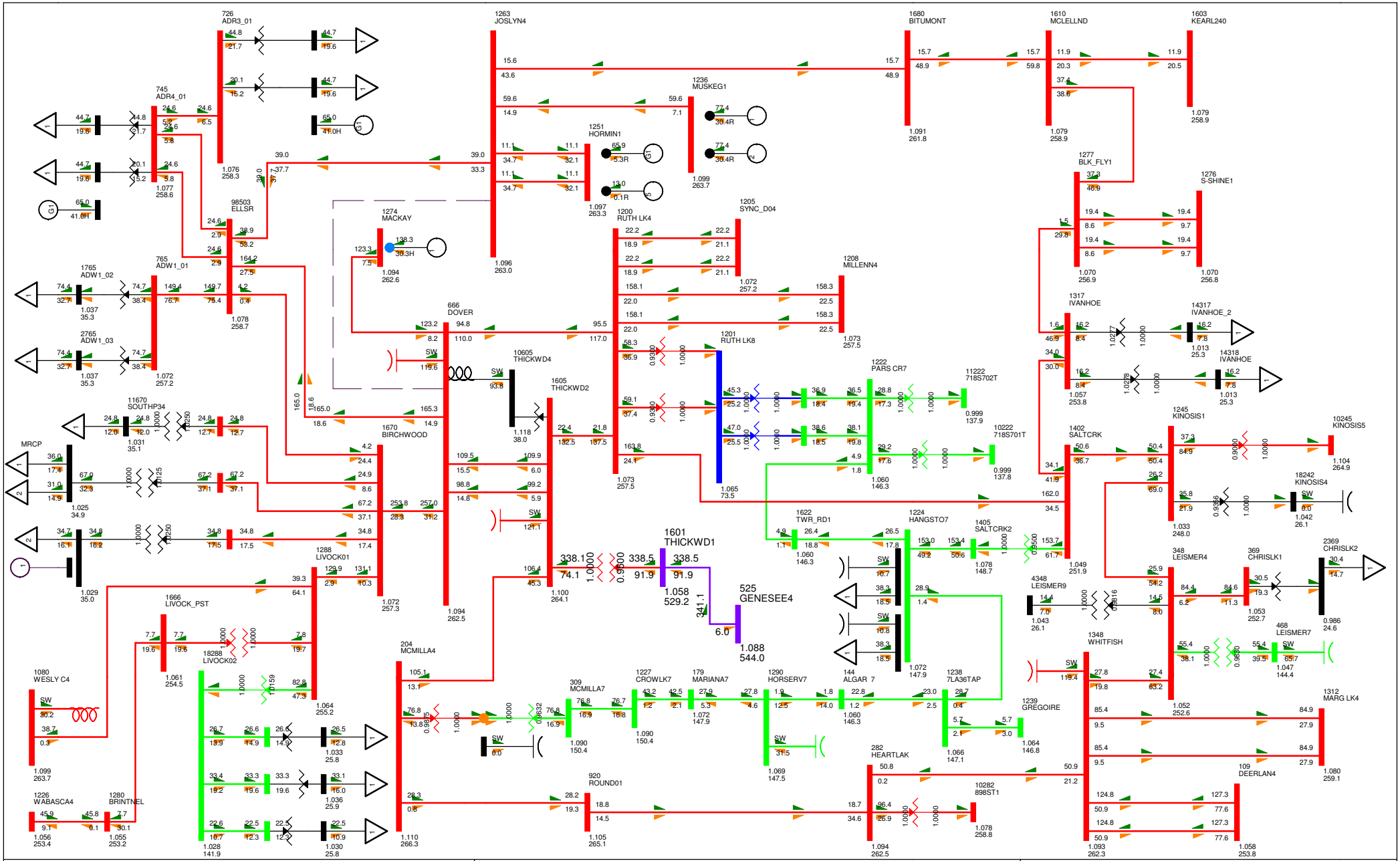

BC - Alberta (IMPORT)787.3 MW

TASMO MODEL; OUTPUT GENERATED 2010-03-01 14:06:46
SWINGBUS 1520 FOR FC-2009-S-2021-04-30:19:24--1--1-0-0
FRI, AUG 12 2011 16:43

2020 NW FMM STUDY

Figure K-2020Sens-9

Bus - VOLTAGE (kV/PU)
Branch - MW/Mvar
Equipment - MW/Mvar
100.0%RATEB
1.120OV 0.950UV
kV: <=34.500 <=69.000 <=138.000 <=240.000 <=500.000 >500.000

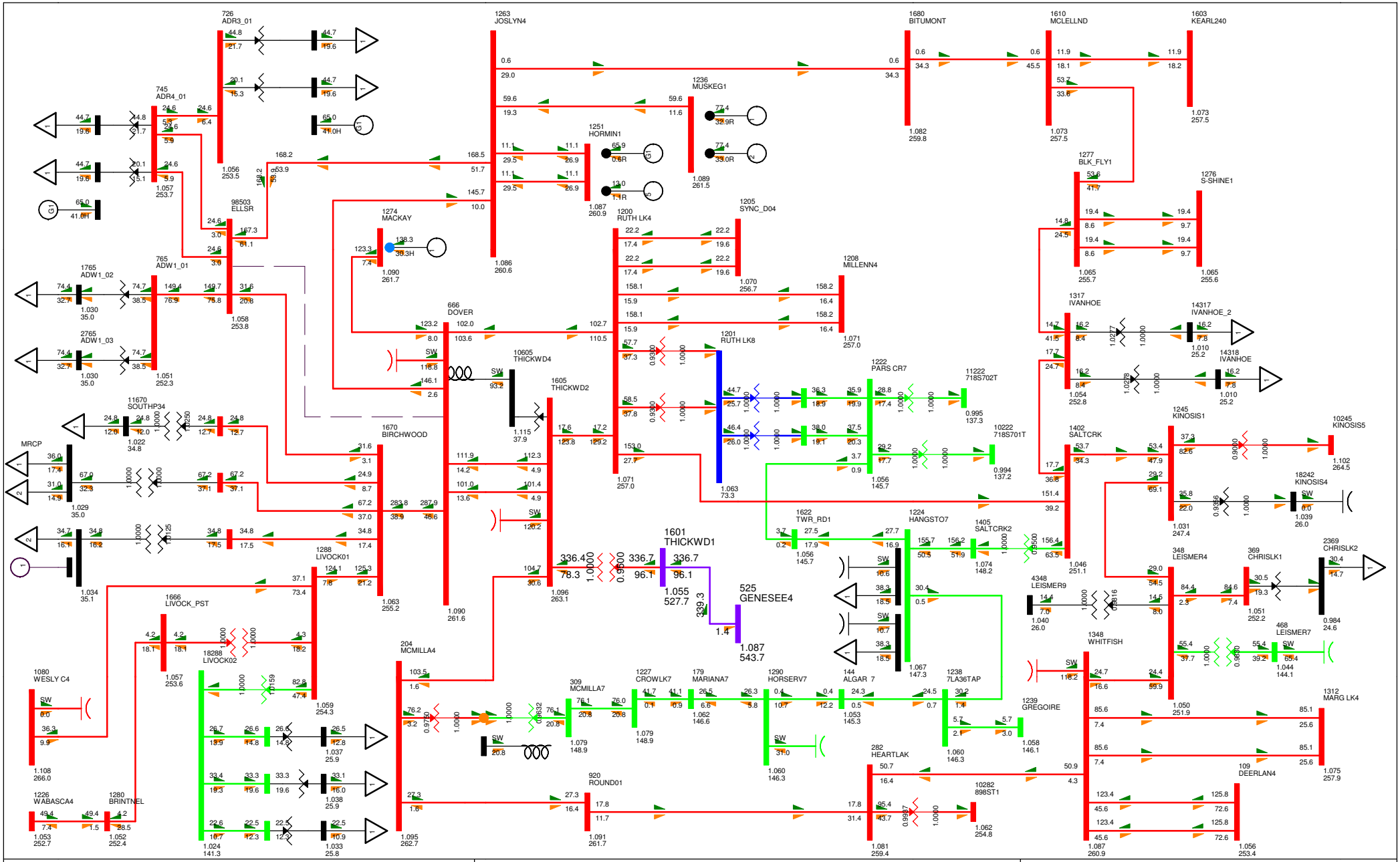

BC - Alberta (IMPORT)790.1 MW

TASMO MODEL; OUTPUT GENERATED 2010-03-01 14:06:46
SWINGBUS 1520 FOR FC-2009-S-2021-04-30:19:24--1--1-0-0
FRI, AUG 12 2011 16:43

2020 NW FMM STUDY

Figure K-2020Sens-10

Bus - VOLTAGE (kV/PU)
Branch - MW/Mvar
Equipment - MW/Mvar
100.0%RATEB
1.120OV 0.950UV
kV: <=34.500 <=69.000 <=138.000 <=240.000 <=500.000 >500.000

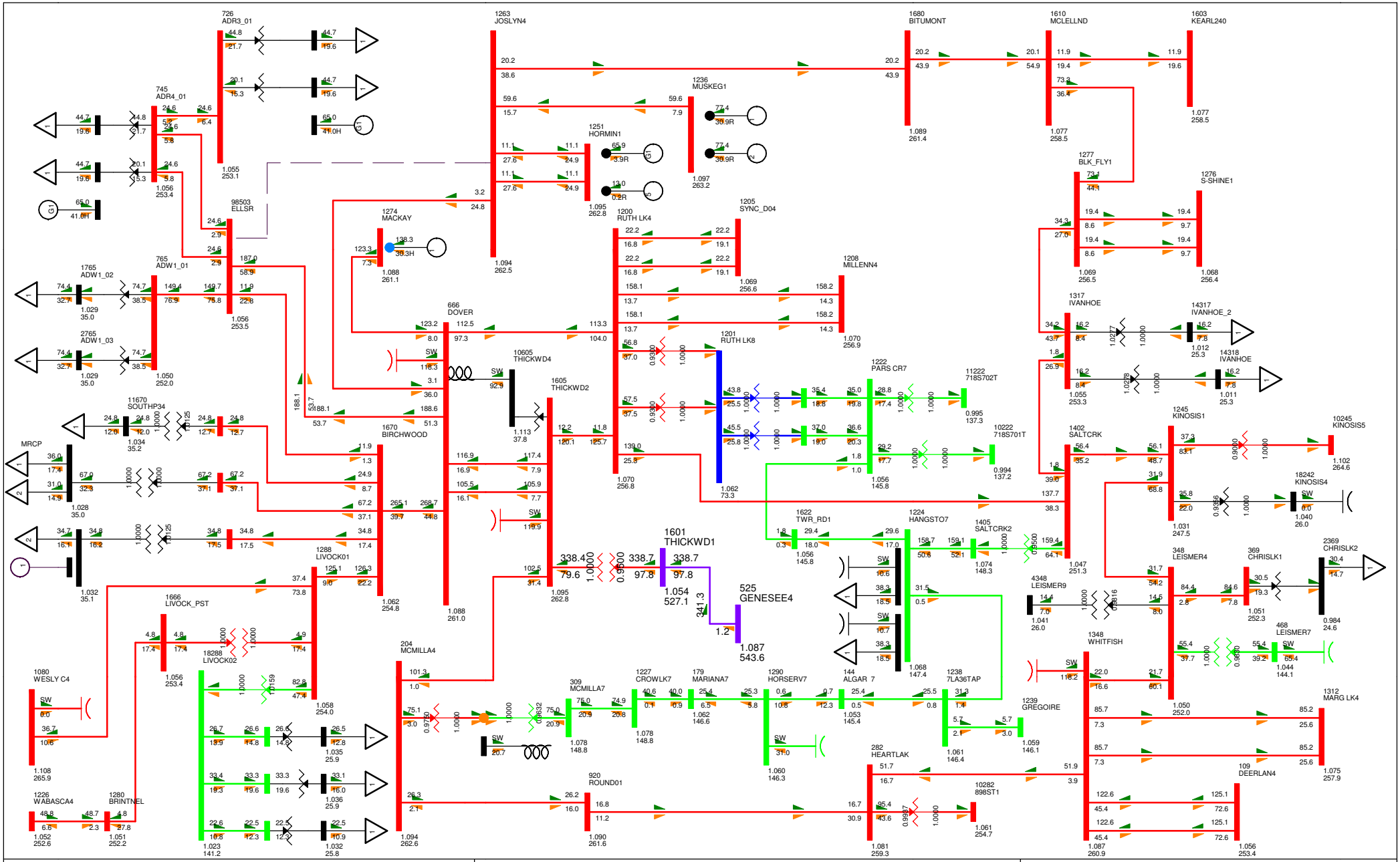

BC - Alberta (IMPORT)789.2 MW

TASMO MODEL; OUTPUT GENERATED 2010-03-01 14:06:46
SWINGBUS 1520 FOR FC-2009-S-2021-04-30:19:24--1--1-0-0
FRI, AUG 12 2011 16:43

2020 NW FMM STUDY

Figure K-2020Sens-11

Bus - VOLTAGE (kV/PU)
Branch - MW/Mvar
Equipment - MW/Mvar
100.0%RATEB
1.120OV 0.950UV
kV: <=34.500 <=69.000 <=138.000 <=240.000 <=500.000 >500.000

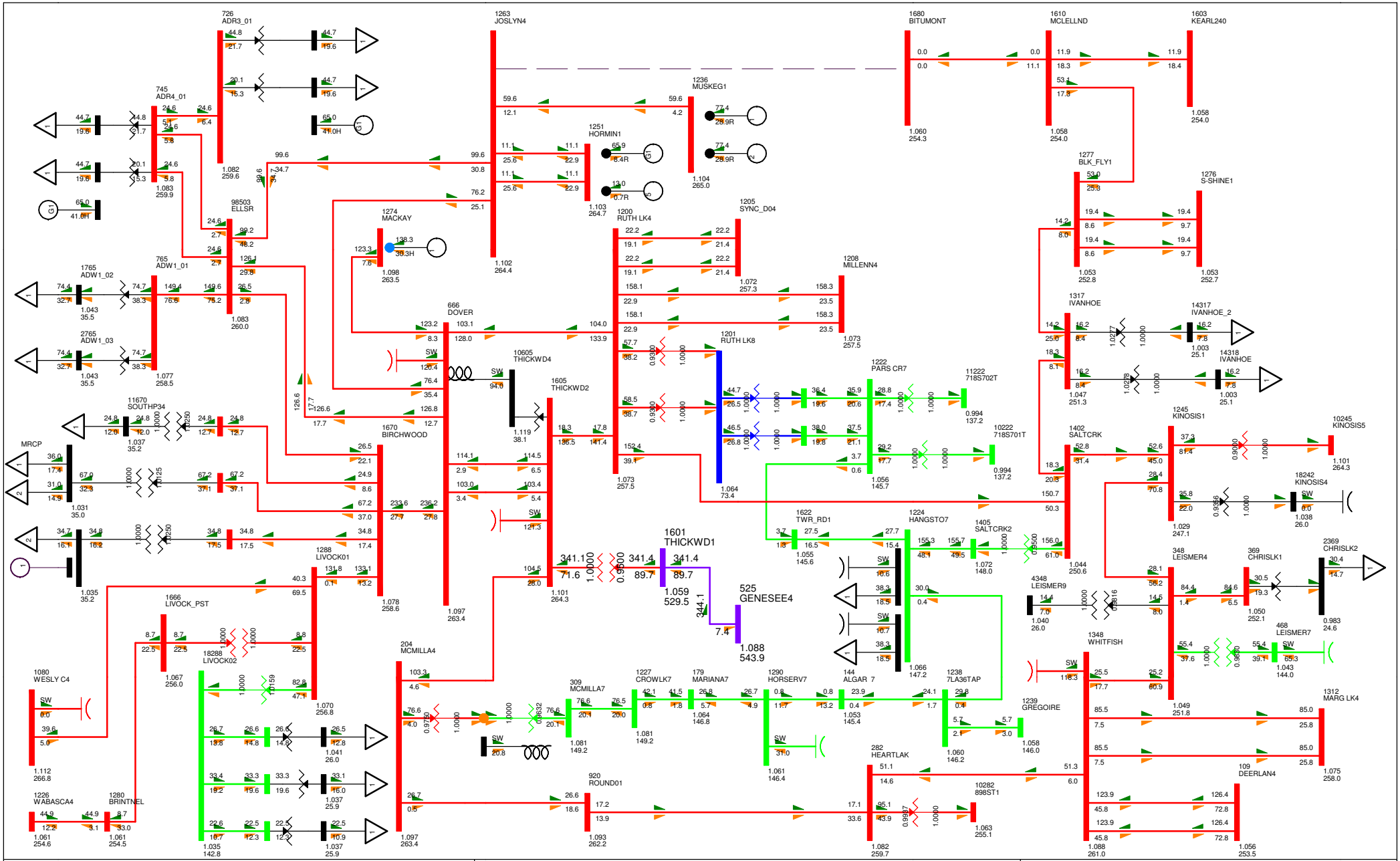

BC - Alberta (IMPORT)787.2 MW

TASMO MODEL; OUTPUT GENERATED 2010-03-01 14:06:46
SWINGBUS 1520 FOR FC-2009-S-2021-04-30:19:24--1--1-0-0
FRI, AUG 12 2011 16:43

2020 NW FMM STUDY

Figure K-2020Sens-12

Bus - VOLTAGE (kV/PU)
Branch - MW/Mvar
Equipment - MW/Mvar
100.0%RATEB
1.120OV 0.950UV
kV: <=34.500 <=69.000 <=138.000 <=240.000 <=500.000 >500.000

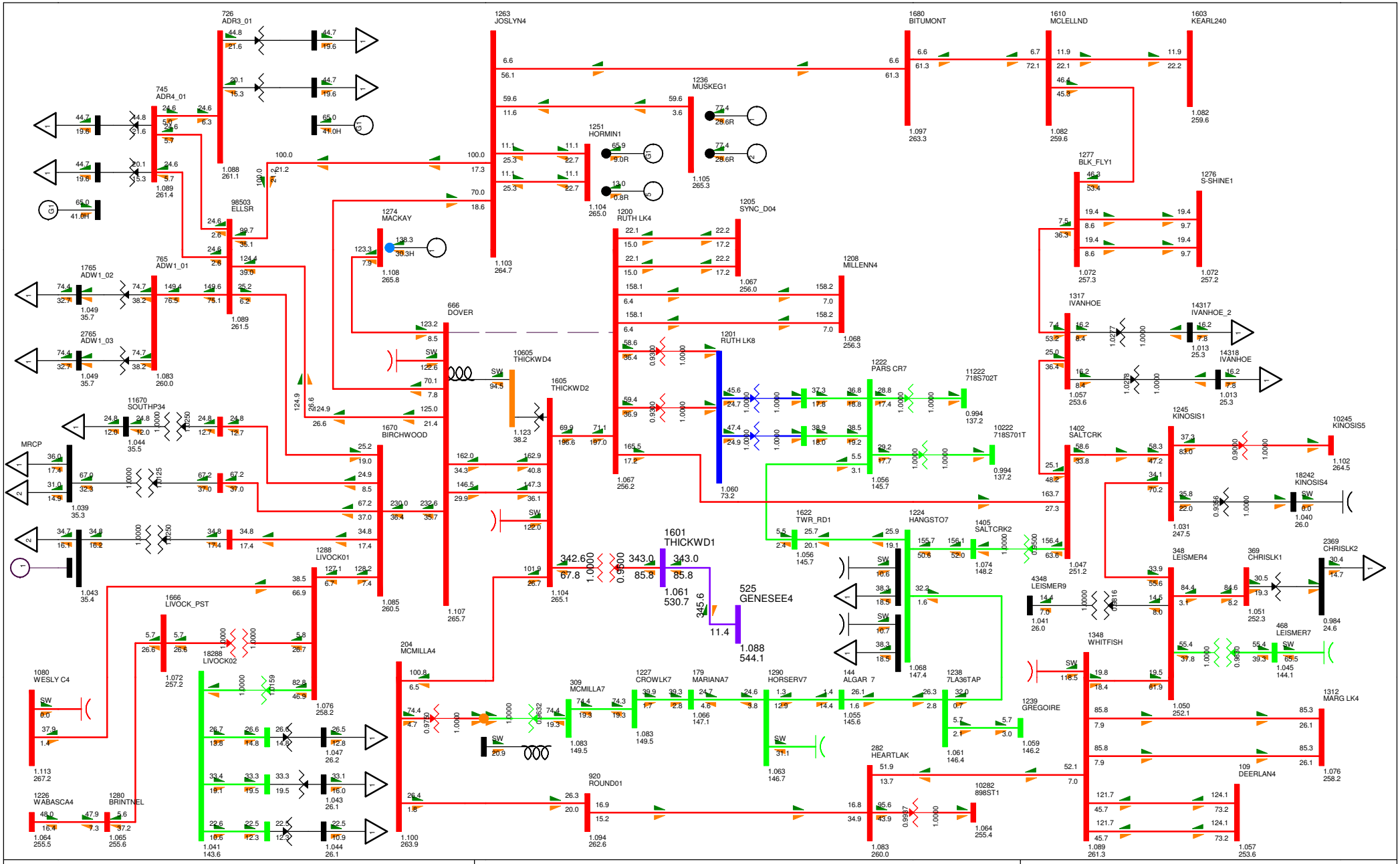

BC - Alberta (IMPORT)788.1 MW

TASMO MODEL; OUTPUT GENERATED 2010-03-01 14:06:46
SWINGBUS 1520 FOR FC-2009-S-2021-04-30:19:24--1--1-0-0
FRI, AUG 12 2011 16:43

2020 NW FMM STUDY

Figure K-2020Sens-13

Bus - VOLTAGE (kV/PU)
Branch - MW/Mvar
Equipment - MW/Mvar
100.0%RATEB
1.120OV 0.950UV
kV: <=34.500 <=69.000 <=138.000 <=240.000 <=500.000 >500.000

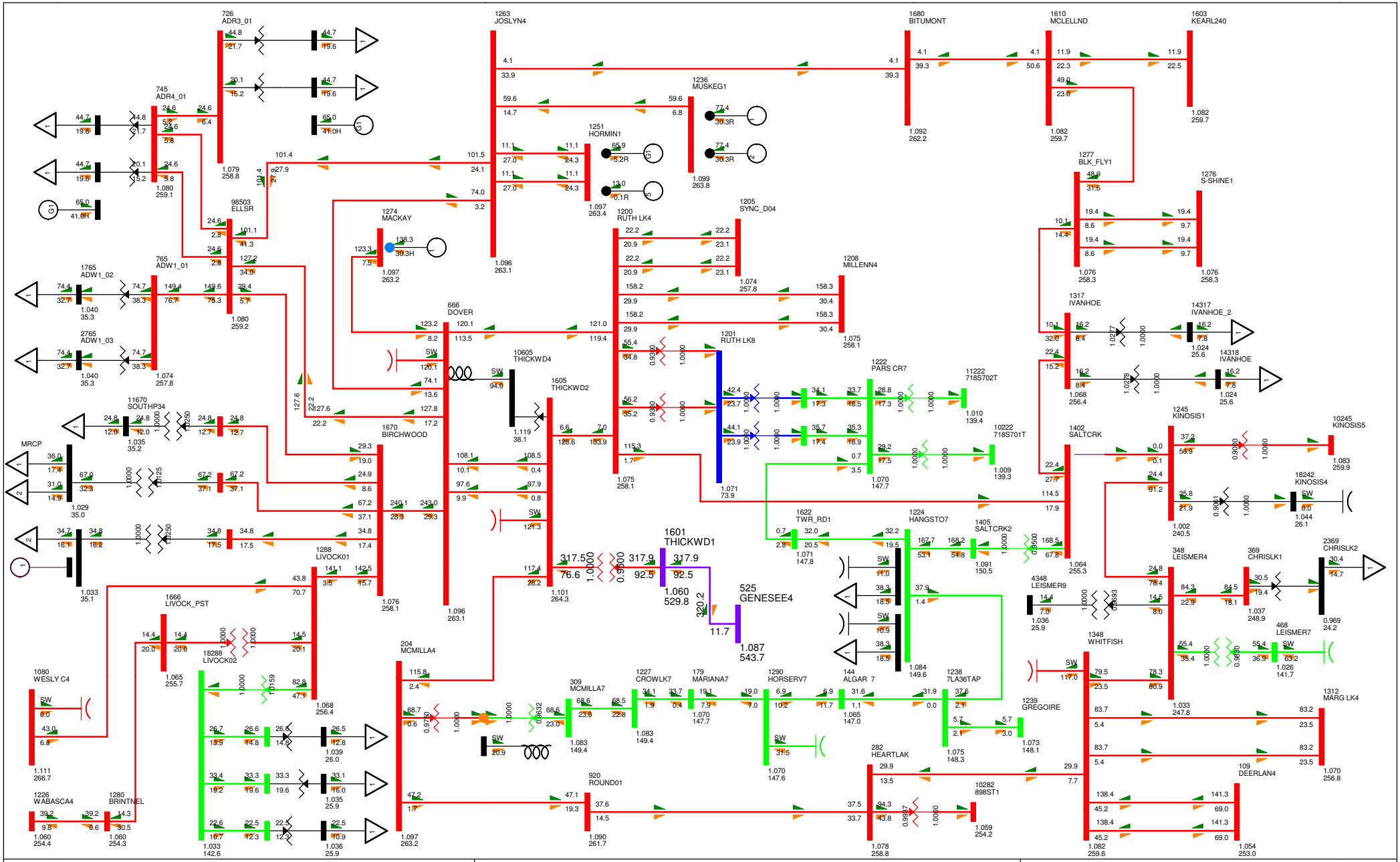
726 ADR3_01
745 ADR4_01
1263 JOSLYN4
1680 BITUMONT
1610 MCLELLND
1603 KEARL240
1236 MUSKEG1
1251 HORMIN1
1277 BLK_FLY1
1276 S-SHINE1
98503 ELLSR
1274 MACKAY
1200 RUTH LK4
1205 SYNC_D04
1208 MILLENN4
1765 ADW1_02
765 ADW1_01
2765 ADW1_03
666 DOVER
1201 RUTH LK8
1222 PARS CR7
11222 718S702T
1317 IVANHOE
14317 IVANHOE_2
14318 IVANHOE
10605 THICKWD4
1605 THICKWD2
1601 THICKWD1
525 GENESEE4
11670 SOUTHP34
MRCP
1670 BIRCHWOOD
1288 LIVOCK01
1666 LIVOCK_PST
18288 LIVOCK02
1622 TWR_RD1
1224 HANGSTO7
1405 SALTCRK2
1402 SALTCRK
1245 KINOSIS1
10245 KINOSIS5
18242 KINOSIS4
4348 LEISMER9
348 LEISMER4
369 CHRISLK1
2369 CHRISLK2
468 LEISMER7
1348 WHITFISH
1239 GREGOIRE
1312 MARG LK4
109 DEERLAN4
204 MCMILLA4
309 MCMILLA7
1227 CROWLK7
179 MARIANA7
1290 HORSERV7
144 ALGAR 7
1238 7LA36TAP
282 HEARTLAK
920 ROUND01
10282 898ST1
1080 WESLY C4
1226 WABASCA4
1280 BRINTNEL
10222 718S701T
1009 139.3
1010 139.4
1091 150.5
1064 255.3
1084 149.6
1073 148.1
1059 254.2
1054 253.0
1082 259.6
1078 258.8
1070 147.6
1075 148.3
1065 147.0
1083 149.4
1070 147.7
1071 147.8
1033 142.6
1097 263.2
1090 261.7
1111 266.7
1060 254.4
1060 254.3
1033 35.1
1029 35.0
1035 35.2
1040 35.3
1074 257.8
1080 259.2
1079 258.8
1080 259.1
1096 263.1
1097 263.4
1099 263.8
1092 262.2
1082 259.7
1076 258.3
1075 258.1
1071 73.9
1074 257.8
1096 263.1
1101 264.3
1076 258.1
1065 255.7
1068 256.4
1039 26.0
1035 25.9
1036 25.9
1097 263.2
1078 258.8
1082 259.6
1054 253.0
1033 247.8
1037 248.9
1026 141.7
1044 26.1
1083 259.9
1002 240.5
1036 25.9
1024 25.6
1068 256.4
1076 258.3
1082 259.7
1099 263.8
1097 263.4
1096 263.1
1080 259.2
1079 258.8
1080 259.1
1074 257.8
1040 35.3
1040 35.3
1033 35.1
1029 35.0
1035 35.2
1076 258.1
1065 255.7
1068 256.4
1033 142.6
1097 263.2
1090 261.7
1111 266.7
1060 254.4
1060 254.3

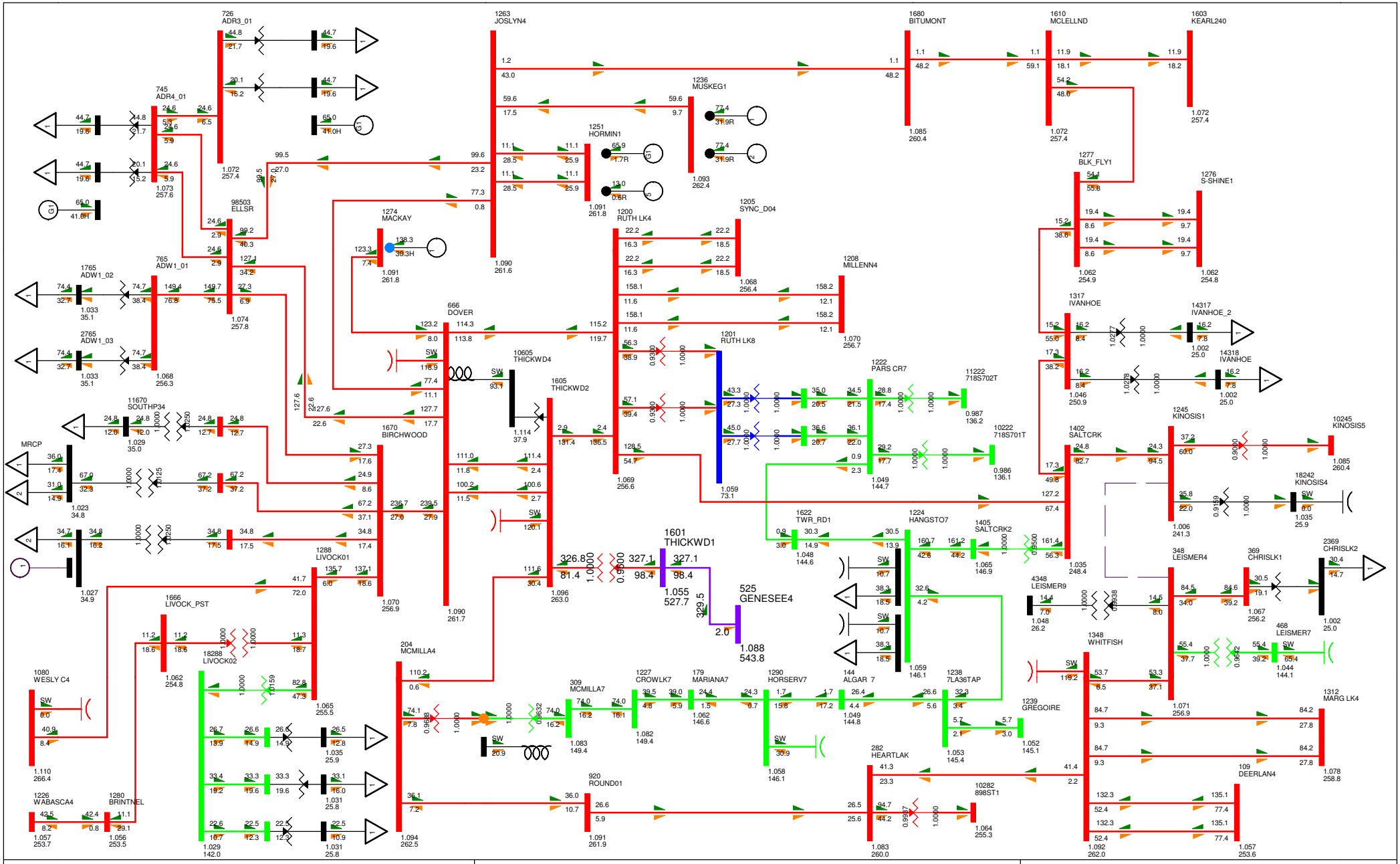
726 ADR3_01
745 ADR4_01
1263 JOSLYN4
1680 BITUMONT
1610 MCLELLND
1603 KEARL240
1236 MUSKEG1
1251 HORMIN1
1277 BLK_FLY1
1276 S-SHINE1
98503 ELLSR
1274 MACKAY
1200 RUTH LK4
1205 SYNC_D04
1208 MILLENN4
1765 ADW1_02
765 ADW1_01
2765 ADW1_03
666 DOVER
1201 RUTH LK8
1317 IVANHOE
14317 IVANHOE_2
14318 IVANHOE
10605 THICKWD4
1605 THICKWD2
1222 PARS CR7
11222 718S702T
10222 718S701T
11670 SOUTHP34
1670 BIRCHWOOD
MRCP
1402 SALTCRK
1245 KINOSIS1
10245 KINOSIS5
18242 KINOSIS4
1622 TWR_RD1
1224 HANGSTO7
1405 SALTCRK2
1601 THICKWD1
525 GENESEE4
348 LEISMER4
369 CHRISLK1
2369 CHRISLK2
4348 LEISMER9
468 LEISMER7
1348 WHITFISH
1239 GREGOIRE
1312 MARG LK4
109 DEERLAN4
1288 LIVOCK01
1666 LIVOCK_PST
18288 LIVOCK02
204 MCMILLA4
309 MCMILLA7
1227 CROWLK7
179 MARIANA7
1290 HORSERV7
144 ALGAR 7
1238 7LA36TAP
282 HEARTLAK
920 ROUND01
10282 898ST1
1080 WESLY C4
1226 WABASCA4
1280 BRINTNEL
BC - Alberta (IMPORT)788.8 MW
TASMO MODEL; OUTPUT GENERATED 2010-03-01 14:06:46
SWINGBUS 1520 FOR FC-2009-S-2021-04-30:19:24--1--1-0-0
FRI, AUG 12 2011 16:43
2020 NW FMM STUDY
Figure K-2020Sens-15
Bus - VOLTAGE (kV/PU)
Branch - MW/Mvar
Equipment - MW/Mvar
100.0%RATEB
1.120OV 0.950UV
kV: <=34.500 <=69.000 <=138.000 <=240.000 <=500.000 >500.000

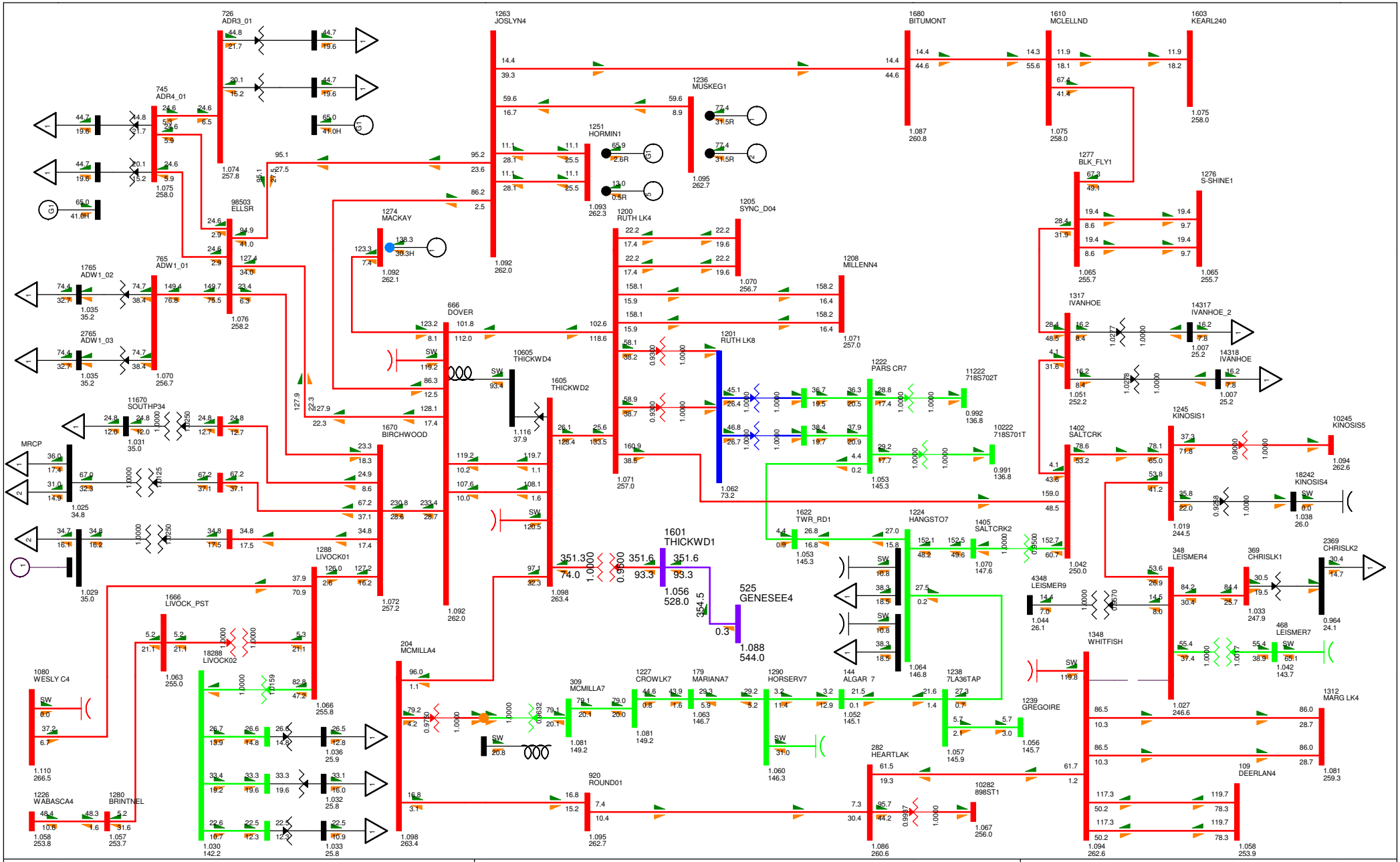

BC - Alberta (IMPORT)787.5 MW

TASMO MODEL; OUTPUT GENERATED 2010-03-01 14:06:46
SWINGBUS 1520 FOR FC-2009-S-2021-04-30:19:24--1--1-0-0
FRI, AUG 12 2011 16:43

2020 NW FMM STUDY

Figure K-2020Sens-16

Bus - VOLTAGE (kV/PU)
Branch - MW/Mvar
Equipment - MW/Mvar

100.0%RATEB
1.120OV 0.950UV
kV: <=34.500 <=69.000 <=138.000 <=240.000 <=500.000 >500.000

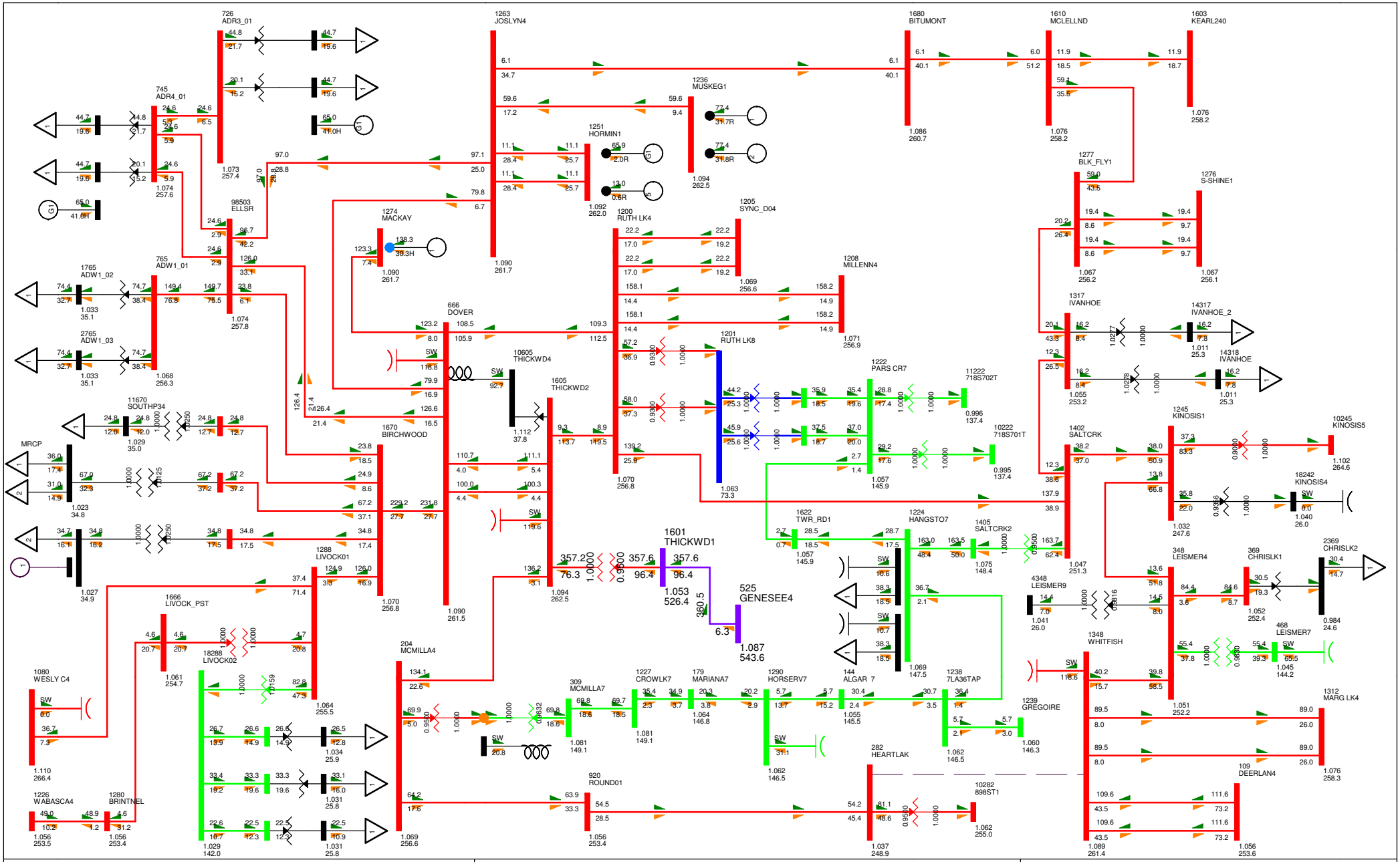

BC - Alberta (IMPORT)788.9 MW

TASMO MODEL; OUTPUT GENERATED 2010-03-01 14:06:46
SWINGBUS 1520 FOR FC-2009-S-2021-04-30:19:24--1--1-0-0
FRI, AUG 12 2011 16:43

2020 NW FMM STUDY

Figure K-2020Sens-17

Bus - VOLTAGE (kV/PU)
Branch - MW/Mvar
Equipment - MW/Mvar
100.0%RATEB
1.120OV 0.950UV
kV: <=34.500 <=69.000 <=138.000 <=240.000 <=500.000 >500.000

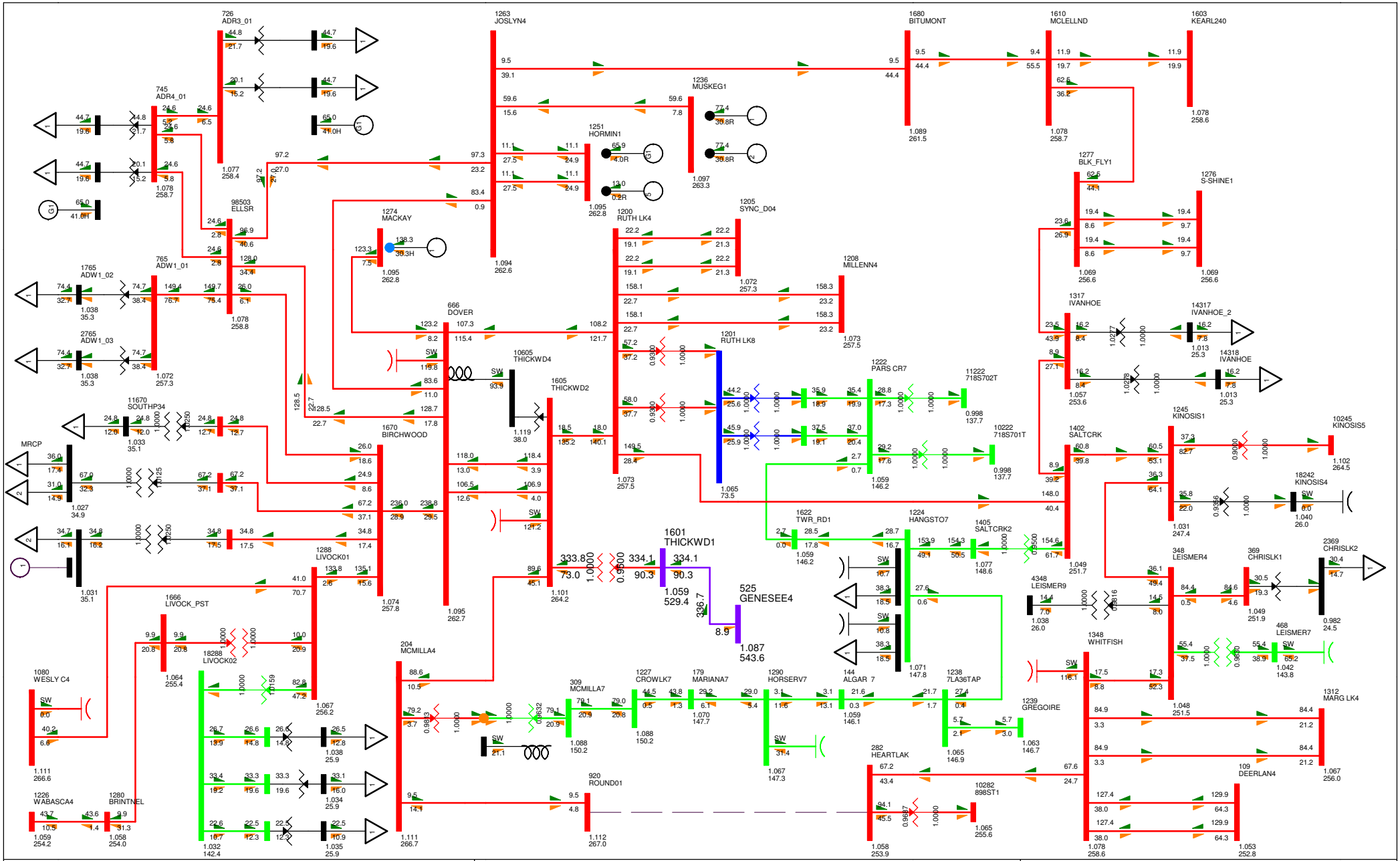

BC - Alberta (IMPORT)787.8 MW

TASMO MODEL; OUTPUT GENERATED 2010-03-01 14:06:46
SWINGBUS 1520 FOR FC-2009-S-2021-04-30:19:24--1--1-0-0
FRI, AUG 12 2011 16:43

2020 NW FMM STUDY

Figure K-2020Sens-18

Bus - VOLTAGE (kV/PU)
Branch - MW/Mvar
Equipment - MW/Mvar
100.0%RATEB
1.120OV 0.950UV
kV: <=34.500 <=69.000 <=138.000 <=240.000 <=500.000 >500.000

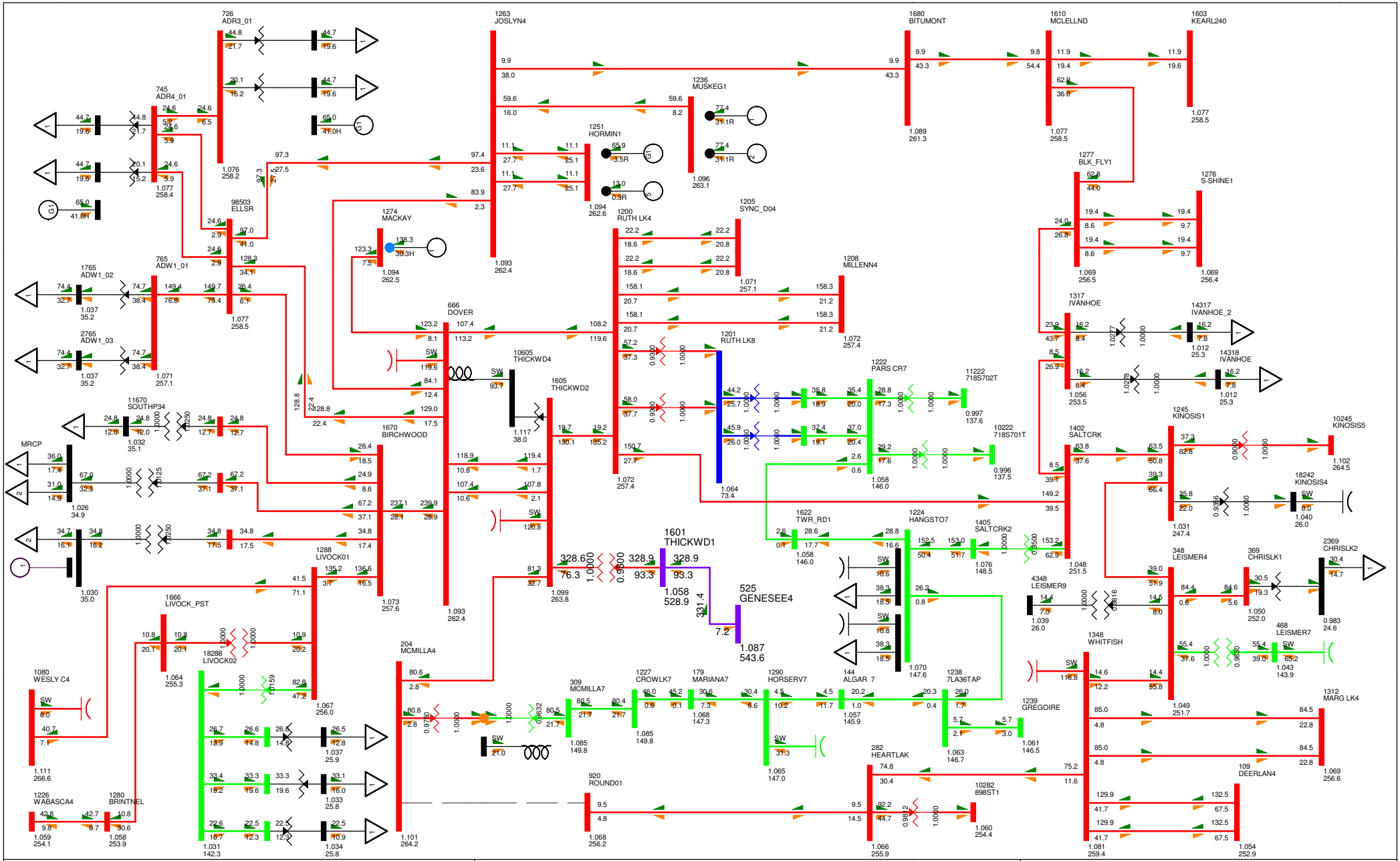
726 ADR3_01
745 ADR4_01
765 ADW1_01
1765 ADW1_02
2765 ADW1_03
98503 ELLSR
1263 JOSLYN4
1680 BITUMONT
1610 MCLELLND
1603 KEARL240
1236 MUSKEG1
1251 HORMIN1
1277 BLK_FLY1
1276 S-SHINE1
1274 MACKAY
1200 RUTH LK4
1205 SYNC_D04
1208 MILLENN4
1317 IVANHOE
14317 IVANHOE_2
14318 IVANHOE
666 DOVER
1201 RUTH LK8
10605 THICKWD4
1605 THICKWD2
1222 PARS CR7
11222 718S702T
10222 718S701T
11670 SOUTHP34
1670 BIRCHWOOD
MRCP
1402 SALTCRK
1245 KINOSIS1
10245 KINOSIS5
18242 KINOSIS4
1622 TWR_RD1
1224 HANGSTO7
1405 SALTCRK2
1601 THICKWD1
525 GENESEE4
1288 LIVOCK01
1666 LIVOCK_PST
18288 LIVOCK02
348 LEISMER4
369 CHRISLK1
2369 CHRISLK2
4348 LEISMER9
468 LEISMER7
1348 WHITFISH
1239 GREGOIRE
1312 MARG LK4
109 DEERLAN4
204 MCMILLA4
309 MCMILLA7
1227 CROWLK7
179 MARIANA7
1290 HORSERV7
144 ALGAR 7
1238 7LA36TAP
282 HEARTLAK
10282 898ST1
920 ROUND01
1080 WESLY C4
1226 WABASCA4
1280 BRINTNEL
BC - Alberta (IMPORT)788.2 MW
TASMO MODEL; OUTPUT GENERATED 2010-03-01 14:06:46
SWINGBUS 1520 FOR FC-2009-S-2021-04-30:19:24--1--1-0-0
FRI, AUG 12 2011 16:43
2020 NW FMM STUDY
Figure K-2020Sens-19
Bus - VOLTAGE (kV/PU)
Branch - MW/Mvar
Equipment - MW/Mvar
100.0%RATEB
1.120OV 0.950UV
kV: <=34.500 <=69.000 <=138.000 <=240.000 <=500.000 >500.000

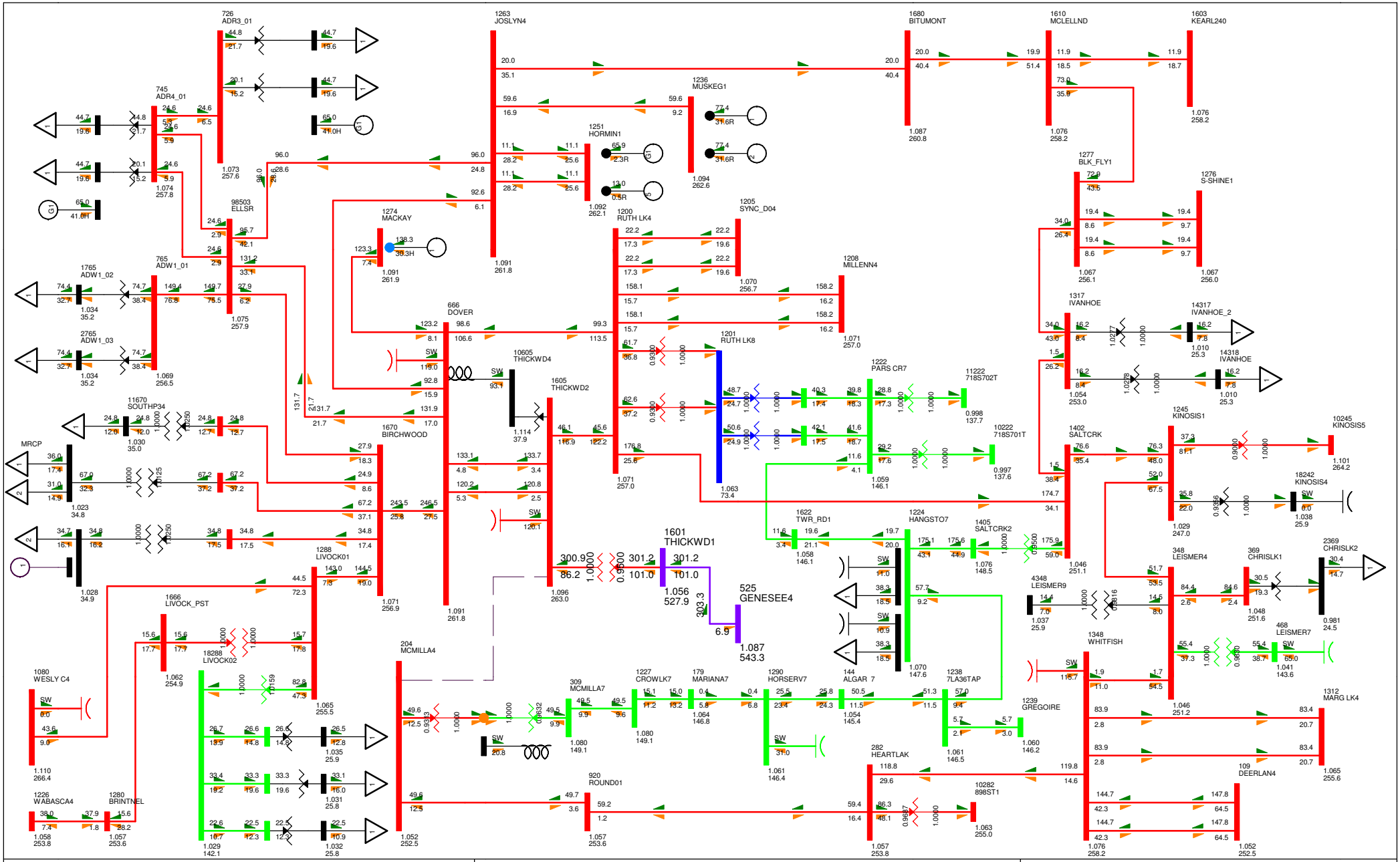
726 ADR3_01
1263 JOSLYN4
1680 BITUMONT
1610 MCLELLND
1603 KEARL240
745 ADR4_01
1236 MUSKEG1
1251 HORMIN1
1277 BLK_FLY1
1276 S-SHINE1
98503 ELLSR
1274 MACKAY
1200 RUTH LK4
1205 SYNC_D04
1208 MILLENN4
1765 ADW1_02
765 ADW1_01
2765 ADW1_03
666 DOVER
1201 RUTH LK8
1222 PARS CR7
11222 718S702T
1317 IVANHOE
14317 IVANHOE_2
14318 IVANHOE
10605 THICKWD4
1605 THICKWD2
10222 718S701T
11670 SOUTHP34
1670 BIRCHWOOD
1402 SALTCRK
1245 KINOSIS1
10245 KINOSIS5
18242 KINOSIS4
MRCP
1622 TWR_RD1
1224 HANGSTO7
1405 SALTCRK2
1601 THICKWD1
525 GENESEE4
348 LEISMER4
369 CHRISLK1
2369 CHRISLK2
4348 LEISMER9
468 LEISMER7
1666 LIVOCK_PST
1288 LIVOCK01
18288 LIVOCK02
204 MCMILLA4
309 MCMILLA7
1227 CROWLK7
179 MARIANA7
1290 HORSERV7
144 ALGAR 7
1238 7LA36TAP
1348 WHITFISH
1239 GREGOIRE
1312 MARG LK4
1080 WESLY C4
1226 WABASCA4
1280 BRINTNEL
920 ROUND01
282 HEARTLAK
10282 898ST1
109 DEERLAN4
BC - Alberta (IMPORT)792.9 MW
TASMO MODEL; OUTPUT GENERATED 2010-03-01 14:06:46
SWINGBUS 1520 FOR FC-2009-5-2021-04-30:19:24--1--1-0-0
FRI, AUG 12 2011 16:43
2020 NW FMM STUDY
Figure K-2020Sens-20
Bus - VOLTAGE (kV/PU)
Branch - MW/Mvar
Equipment - MW/Mvar
100.0%RATEB
1.120OV 0.950UV
kV: <=34.500 <=69.000 <=138.000 <=240.000 <=500.000 >500.000

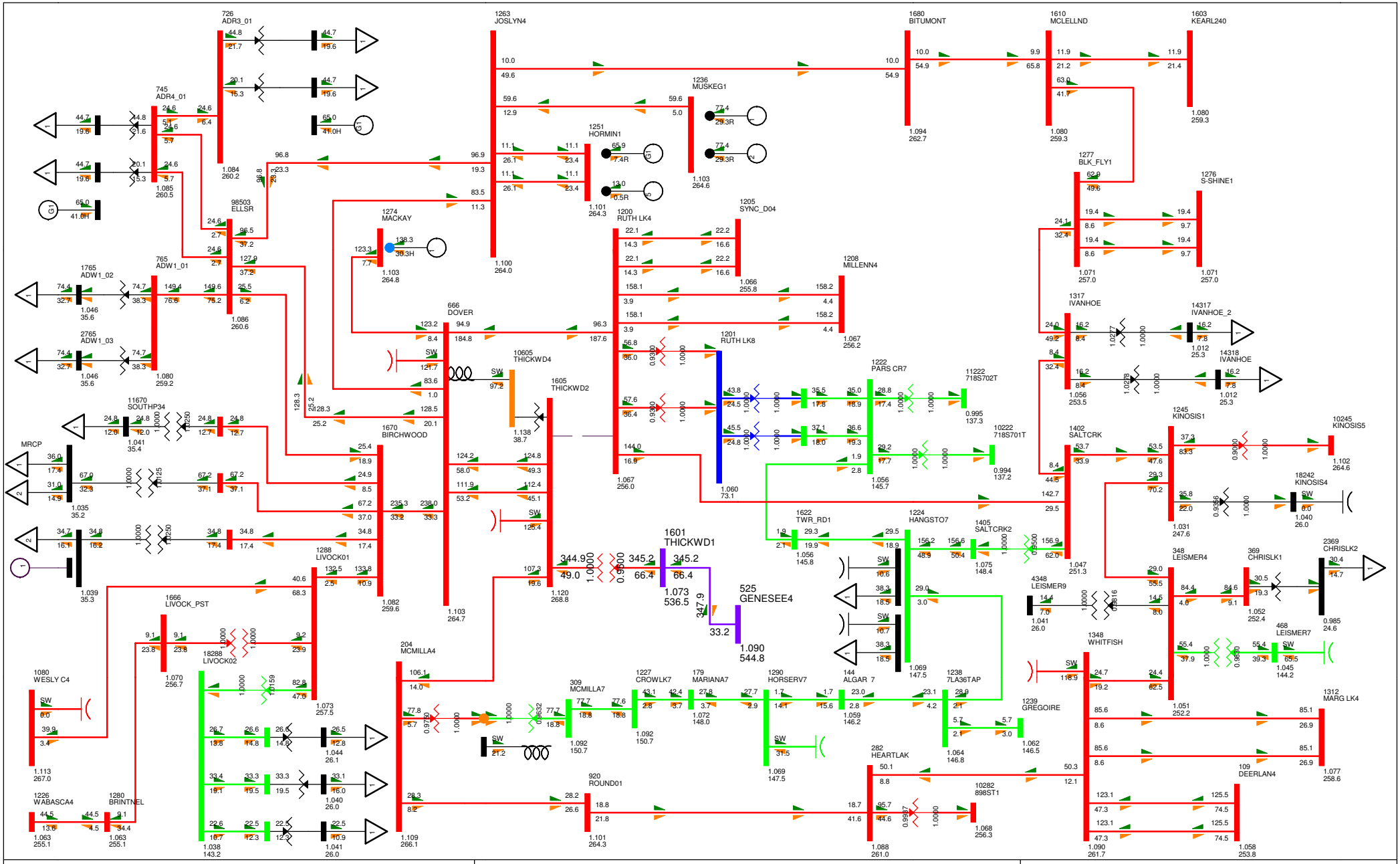

BC - Alberta (IMPORT)787.2 MW

TASMO MODEL; OUTPUT GENERATED 2010-03-01 14:06:46
SWINGBUS 1520 FOR FC-2009-S-2021-04-30:19:24--1--1-0-0
FRI, AUG 12 2011 16:43

2020 NW FMM STUDY

Figure K-2020Sens-21

Bus - VOLTAGE (kV/PU)
Branch - MW/Mvar
Equipment - MW/Mvar
100.0%RATEB
1.120OV 0.950UV
kV: <=34.500 <=69.000 <=138.000 <=240.000 <=500.000 >500.000

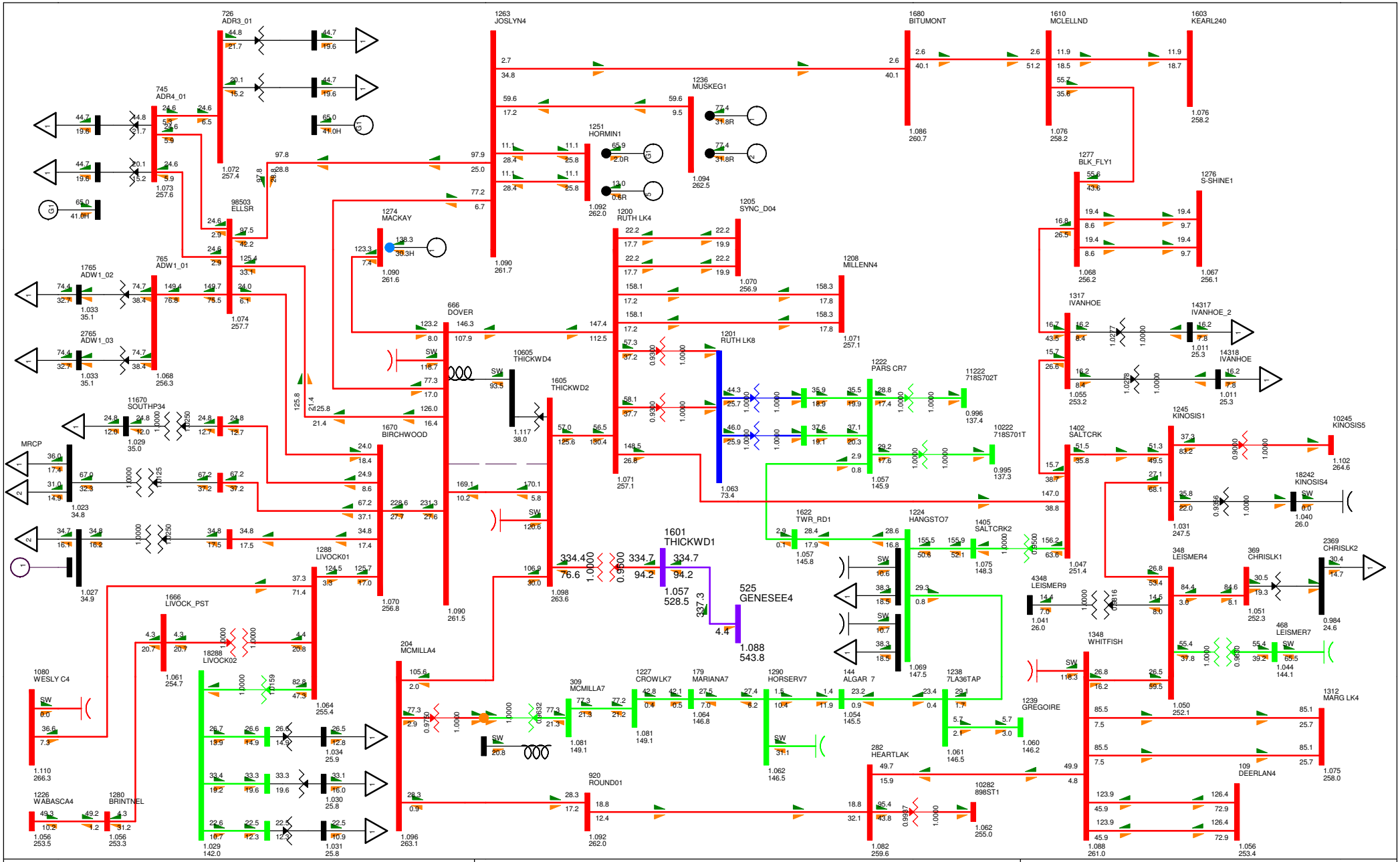
726 ADR3_01
745 ADR4_01
1263 JOSLYN4
1680 BITUMONT
1610 MCLELLND
1603 KEARL240
1236 MUSKEG1
1251 HORMIN1
1277 BLK_FLY1
1276 S-SHINE1
98503 ELLSR
1274 MACKAY
1200 RUTH LK4
1205 SYNC_D04
1208 MILLENN4
1765 ADW1_02
765 ADW1_01
2765 ADW1_03
1317 IVANHOE
14317 IVANHOE_2
14318 IVANHOE
666 DOVER
1201 RUTH LK8
1222 PARS CR7
11222 718S702T
10222 718S701T
10605 THICKWD4
1605 THICKWD2
1601 THICKWD1
525 GENESEE4
11670 SOUTHP34
MRCP
1670 BIRCHWOOD
1288 LIVOCK01
1666 LIVOCK_PST
18288 LIVOCK02
1622 TWR_RD1
1224 HANGSTO7
1405 SALTCRK2
1402 SALTCRK
1245 KINOSIS1
10245 KINOSIS5
18242 KINOSIS4
1348 WHITFISH
348 LEISMER4
4348 LEISMER9
369 CHRISLK1
2369 CHRISLK2
468 LEISMER7
1239 GREGOIRE
1312 MARG LK4
109 DEERLAN4
204 MCMILLA4
309 MCMILLA7
1227 CROWLK7
179 MARIANA7
1290 HORSERV7
144 ALGAR 7
1238 7LA36TAP
282 HEARTLAK
920 ROUND01
10282 898ST1
1080 WESLY C4
1226 WABASCA4
1280 BRINTNEL
BC - Alberta (IMPORT)788.5 MW
TASMO MODEL; OUTPUT GENERATED 2010-03-01 14:06:46
SWINGBUS 1520 FOR FC-2009-S-2021-04-30:19:24--1--1-0-0
FRI, AUG 12 2011 16:43
2020 NW FMM STUDY
Figure K-2020Sens-22
Bus - VOLTAGE (kV/PU)
Branch - MW/Mvar
Equipment - MW/Mvar
100.0%RATEB
1.120OV 0.950UV
kV: <=34.500 <=69.000 <=138.000 <=240.000 <=500.000 >500.000

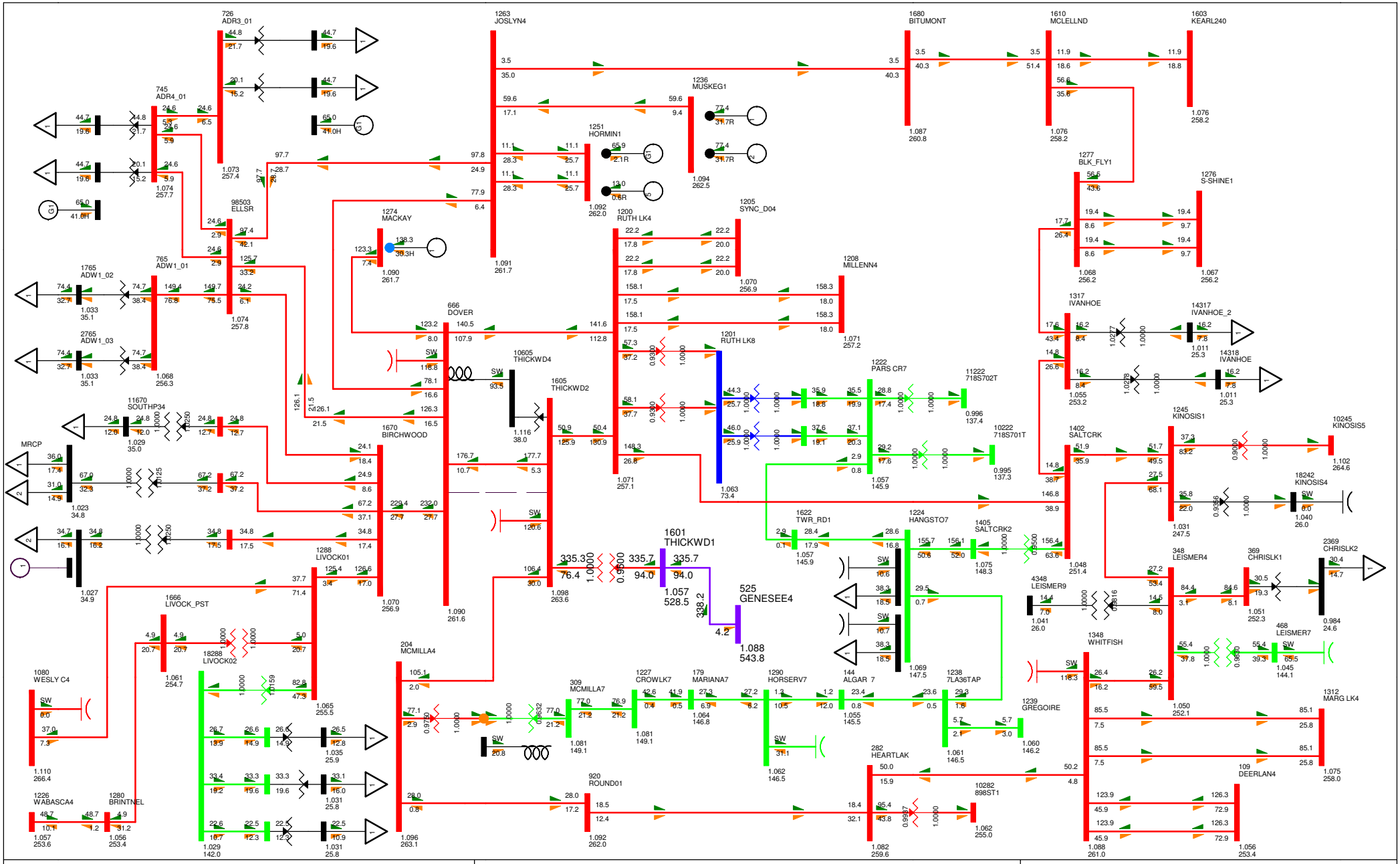

BC - Alberta (IMPORT)788.3 MW

TASMO MODEL; OUTPUT GENERATED 2010-03-01 14:06:46
SWINGBUS 1520 FOR FC-2009-S-2021-04-30:19:24--1--1-0-0
FRI, AUG 12 2011 16:43

2020 NW FMM STUDY

Figure K-2020Sens-23

Bus - VOLTAGE (kV/PU)
Branch - MW/Mvar
Equipment - MW/Mvar
100.0%RATEB
1.120OV 0.950UV
kV: <=34.500 <=69.000 <=138.000 <=240.000 <=500.000 >500.000

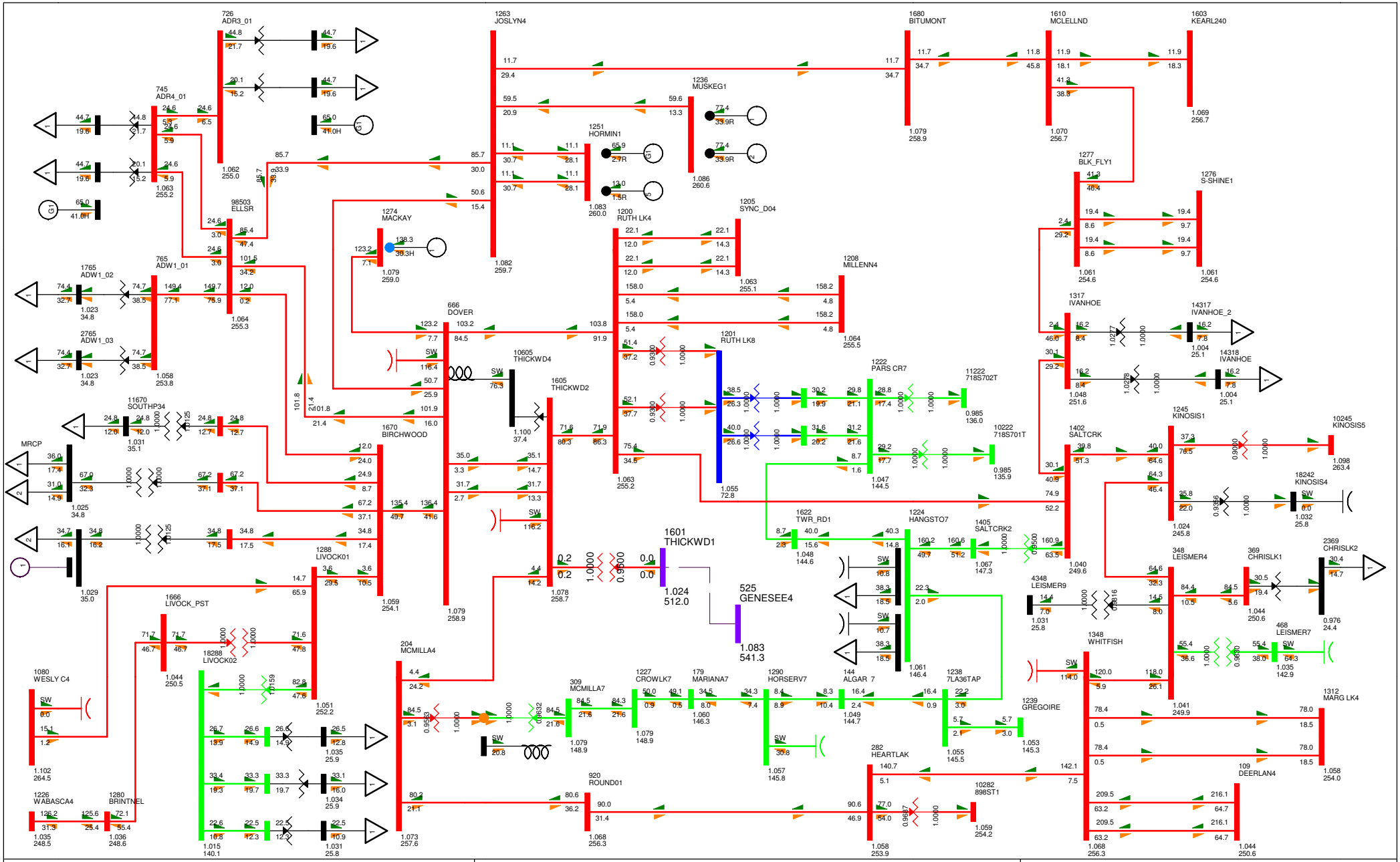
726 ADR3_01
745 ADR4_01
1263 JOSLYN4
1680 BITUMONT
1610 MCLELLND
1603 KEARL240
1236 MUSKEG1
1251 HORMIN1
1277 BLK_FLY1
1276 S-SHINE1
98503 ELLSR
1274 MACKAY
1200 RUTH LK4
1205 SYNC_D04
1208 MILLENN4
1765 ADW1_02
765 ADW1_01
2765 ADW1_03
666 DOVER
1201 RUTH LK8
1222 PARS CR7
11222 718S702T
10222 718S701T
1317 IVANHOE
14317 IVANHOE_2
14318 IVANHOE
10605 THICKWD4
1605 THICKWD2
1670 BIRCHWOOD
11670 SOUTHP34
MRCP
1402 SALTCRK
1245 KINOSIS1
10245 KINOSIS5
18242 KINOSIS4
1622 TWR_RD1
1224 HANGSTO7
1405 SALTCRK2
4348 LEISMER9
348 LEISMER4
369 CHRISLK1
2369 CHRISLK2
468 LEISMER7
1288 LIVOCK01
1666 LIVOCK_PST
18288 LIVOCK02
1601 THICKWD1
525 GENESEE4
204 MCMILLA4
309 MCMILLA7
1227 CROWLK7
179 MARIANA7
1290 HORSERV7
144 ALGAR 7
1238 7LA36TAP
1239 GREGOIRE
1348 WHITFISH
1312 MARG LK4
109 DEERLAN4
282 HEARTLAK
920 ROUND01
10282 898ST1
1080 WESLY C4
1226 WABASCA4
1280 BRINTNEL
BC - Alberta (IMPORT)826.6 MW
TASMO MODEL; OUTPUT GENERATED 2010-03-01 14:06:46
SWINGBUS 1520 FOR FC-2009-S-2021-04-30:19:24--1--1-0-0
FRI, AUG 12 2011 16:43
2020 NW FMM STUDY
Figure K-2020Sens-24
Bus - VOLTAGE (kV/PU)
Branch - MW/Mvar
Equipment - MW/Mvar
100.0%RATEB
1.120OV 0.950UV
kV: <=34.500 <=69.000 <=138.000 <=240.000 <=500.000 >500.000

Table K-2: P-V Analysis Summary – 2020 Sensitivity

Figure Number	System Normal and Category B Contingencies	Forecasted 2020 Winter Peak (MW)	105% Margin (MW)	Nose Point (MW)
Figure K2-2020SENS-1	Normal operation condition	2782	2921	3482
Figure K2-2020SENS-2	500 kV Thickwood 951S to Genesee	2782	2921	3212
Figure K2-2020SENS-3	9L66 Muskeg River 847S to Joslyn 849S	2782	2921	3332
Figure K2-2020SENS-4	240 kV 971L Conklin 762S to Sunday Creek	2782	2921	3372
Figure K2-2020SENS-5	SaltCreek 240/144 kV transformer	2782	2921	3392
Figure K2-2020SENS-6	240 kV Kinosis 856S to Leismer 72S	2782	2921	3422
	Category C5 Contingencies	**Forecasted 2020 Winter Peak (MW)**	**102.5% Margin (MW)**	**Maximum Operating Limit (MW)**
Figure K2-2020SENS-7	9L08 9L09, Dover 888S to Ells River 2079S and Joslyn 849S Double Circuit 240 kV Lines	2782	2852	3352
Figure K2-2020SENS-8	9L76 9L09, Joslyn 849S to Ells River 2079S and Dover 888S Double Circuit 240 kV Lines	2782	2852	3342
Figure K2-2020SENS-9	9L01 9L58, Dover 888S to Ruth Lake 848S Double Circuit 240 kV Lines	2782	2852	3452

TASMO MODEL; OUTPUT GENERATED 2010-03-01 14:06:46
SWINGBUS 1520 FOR FC-2009-5:2021-04-30:19:24--1--1-0-0
FRI, JUN 24 2011 16:46

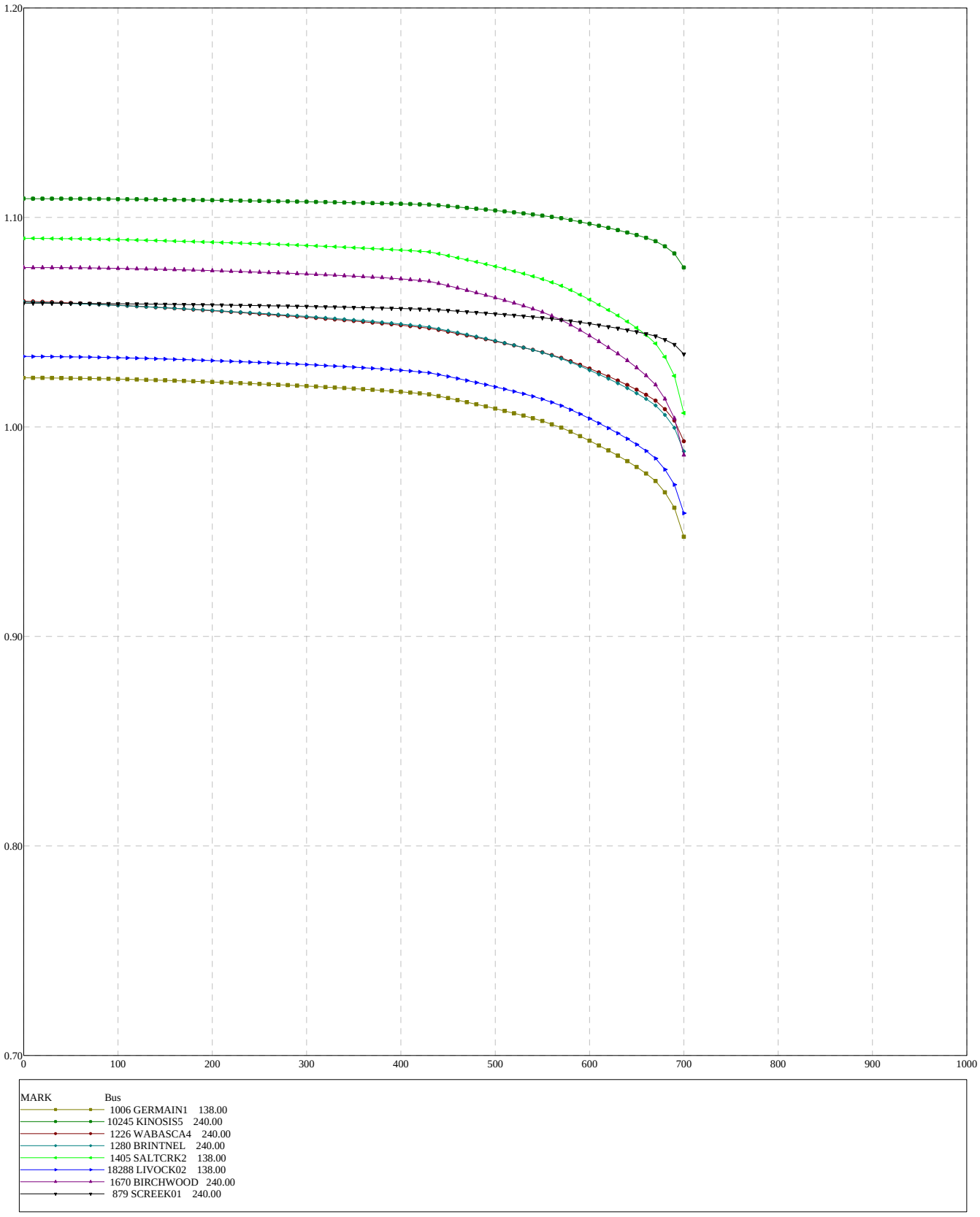

Figure K2-2020Sens-1

TASMO MODEL; OUTPUT GENERATED 2010-03-01 14:06:46
SWINGBUS 1520 FOR FC-2009-5:2021-04-30:19:24--1--1-0-0
FRI, JUN 24 2011 16:44

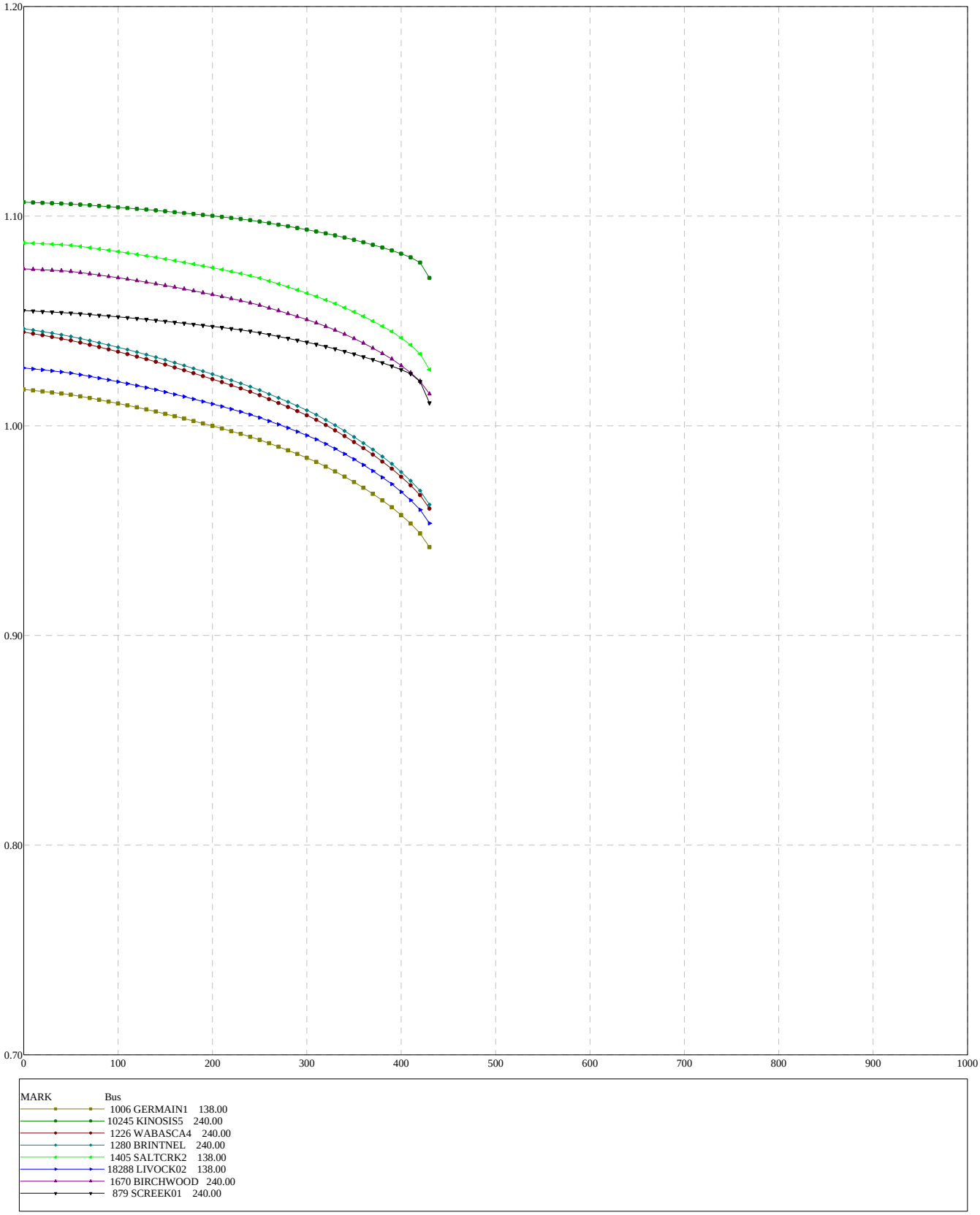

Figure K2-2020Sens-2

TASMO MODEL; OUTPUT GENERATED 2010-03-01 14:06:46
SWINGBUS 1520 FOR FC-2009-5:2021-04-30:19:24--1--1-0-0
FRI, JUN 24 2011 16:44

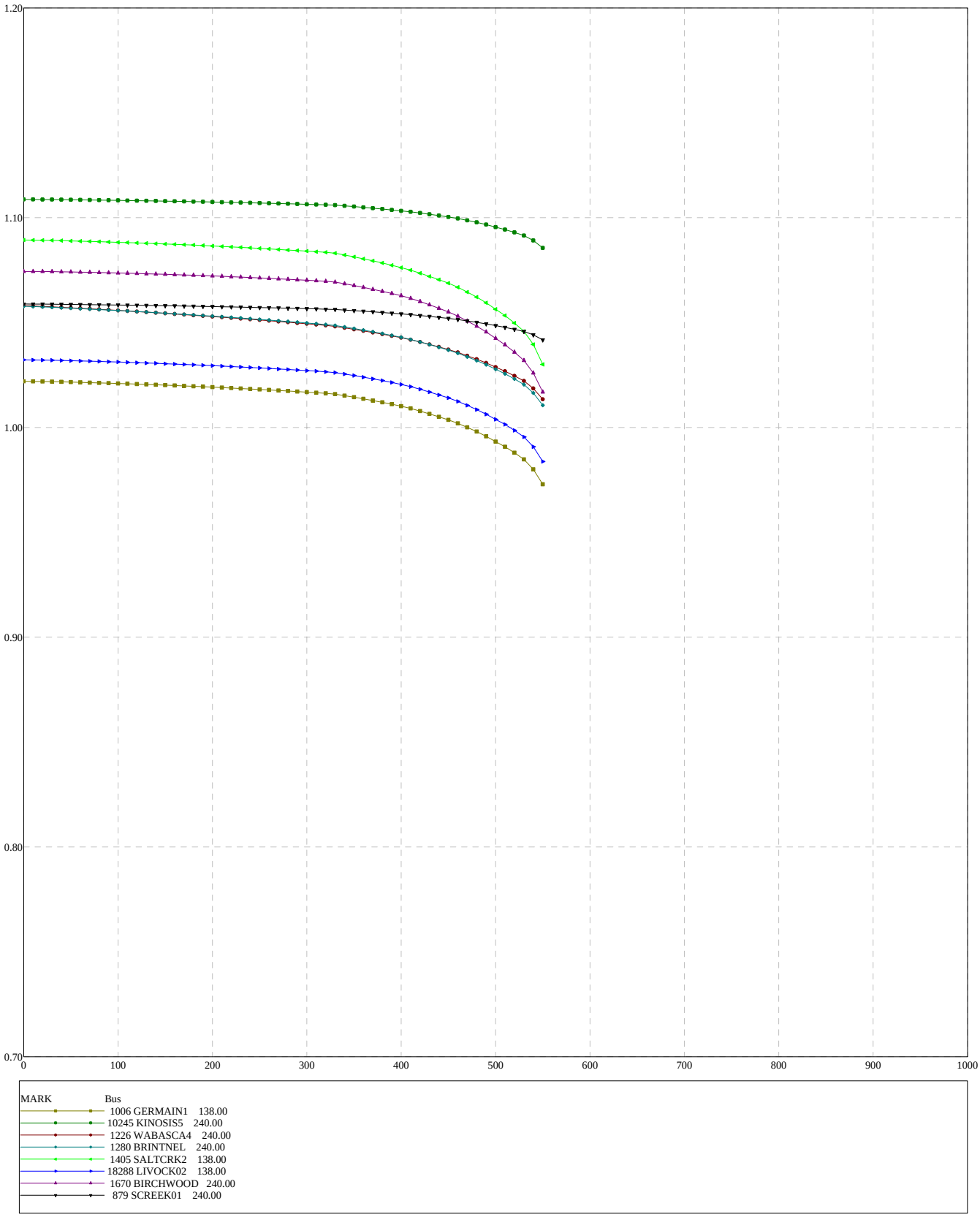

Figure K2-2020Sens-3

TASMO MODEL; OUTPUT GENERATED 2010-03-01 14:06:46
SWINGBUS 1520 FOR FC-2009-5:2021-04-30:19:24--1--1-0-0
FRI, JUN 24 2011 16:43

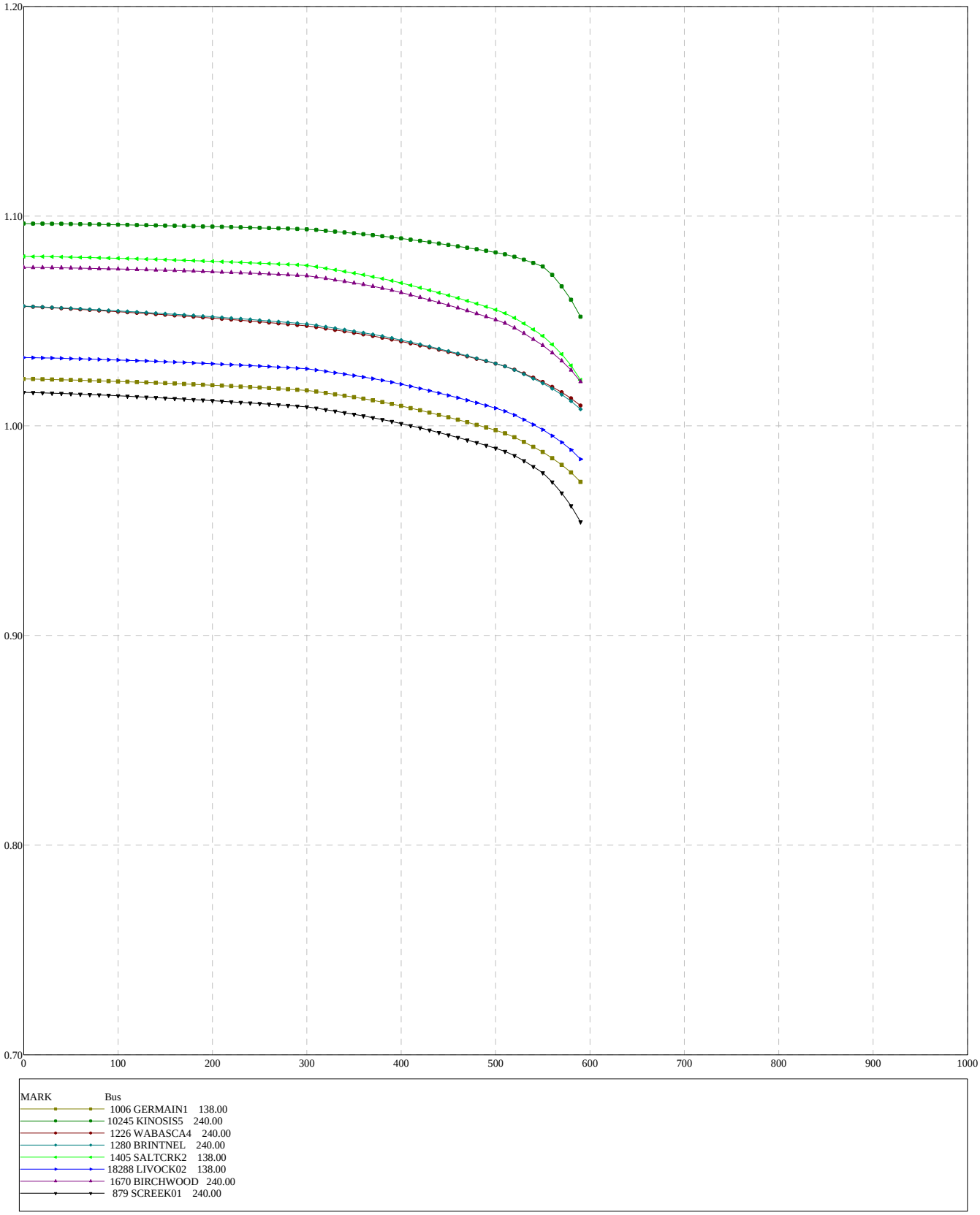

Figure K2-2020Sens-4

TASMO MODEL; OUTPUT GENERATED 2010-03-01 14:06:46
SWINGBUS 1520 FOR FC-2009-5:2021-04-30:19:24--1--1-0-0
FRI, JUN 24 2011 16:35

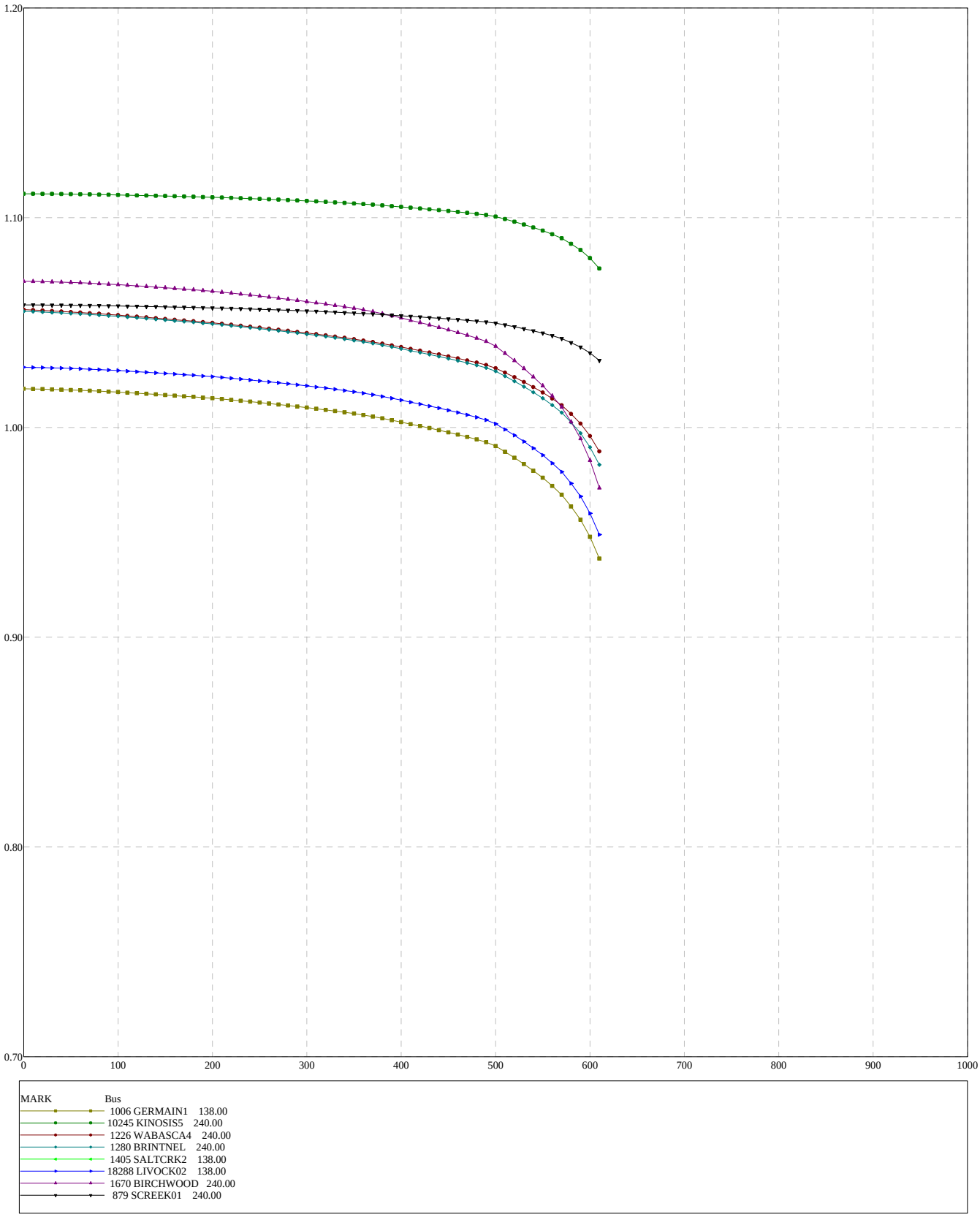

Figure K2-2020Sens-5

TASMO MODEL; OUTPUT GENERATED 2010-03-01 14:06:46
SWINGBUS 1520 FOR FC-2009-5:2021-04-30:19:24--1--1-0-0
FRI, JUN 24 2011 16:34

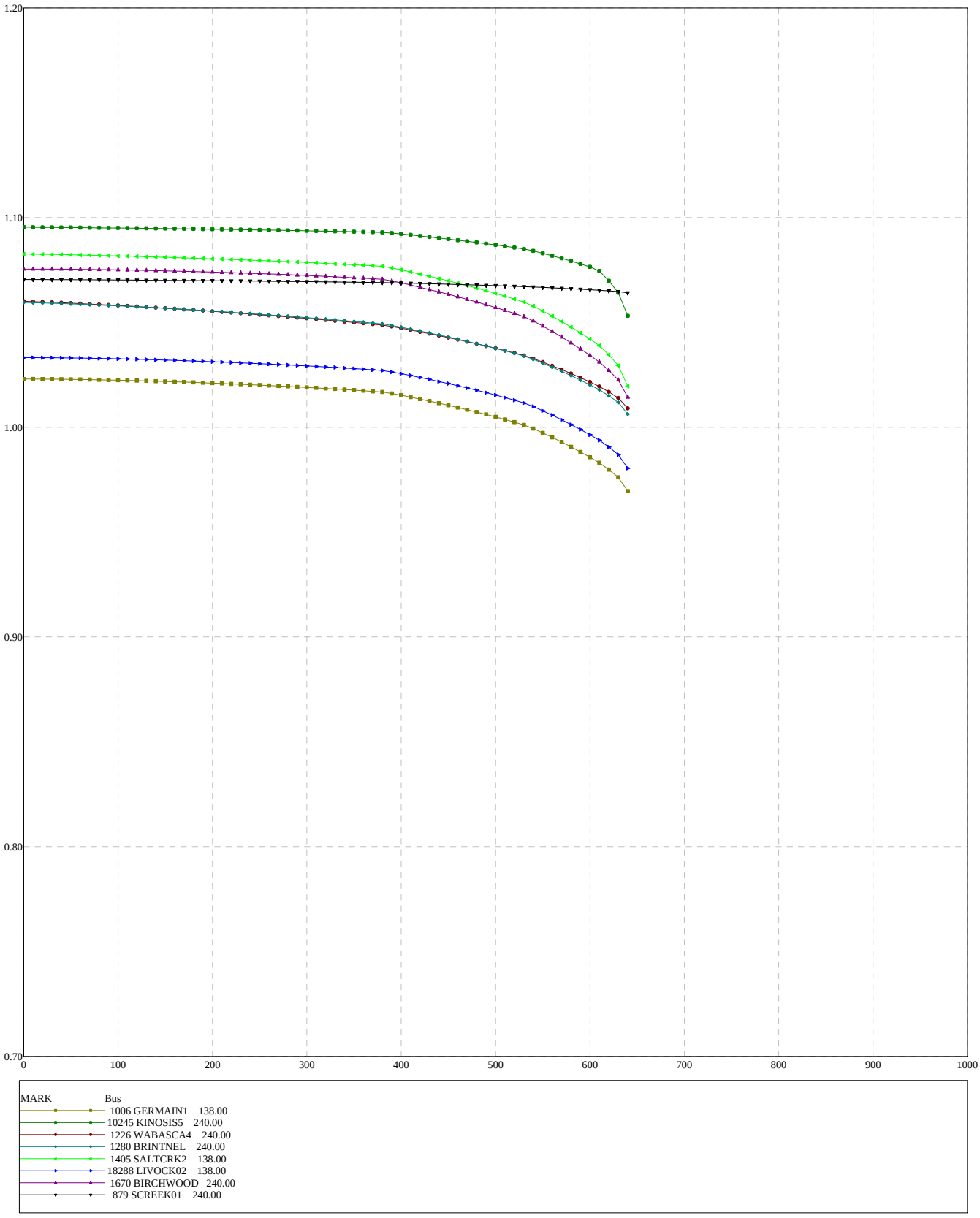

Figure K2-2020Sens-6

TASMO MODEL; OUTPUT GENERATED 2010-03-01 14:06:46
SWINGBUS 1520 FOR FC-2009-5:2021-04-30:19:24--1--1-0-0
FRI, JUN 24 2011 16:45

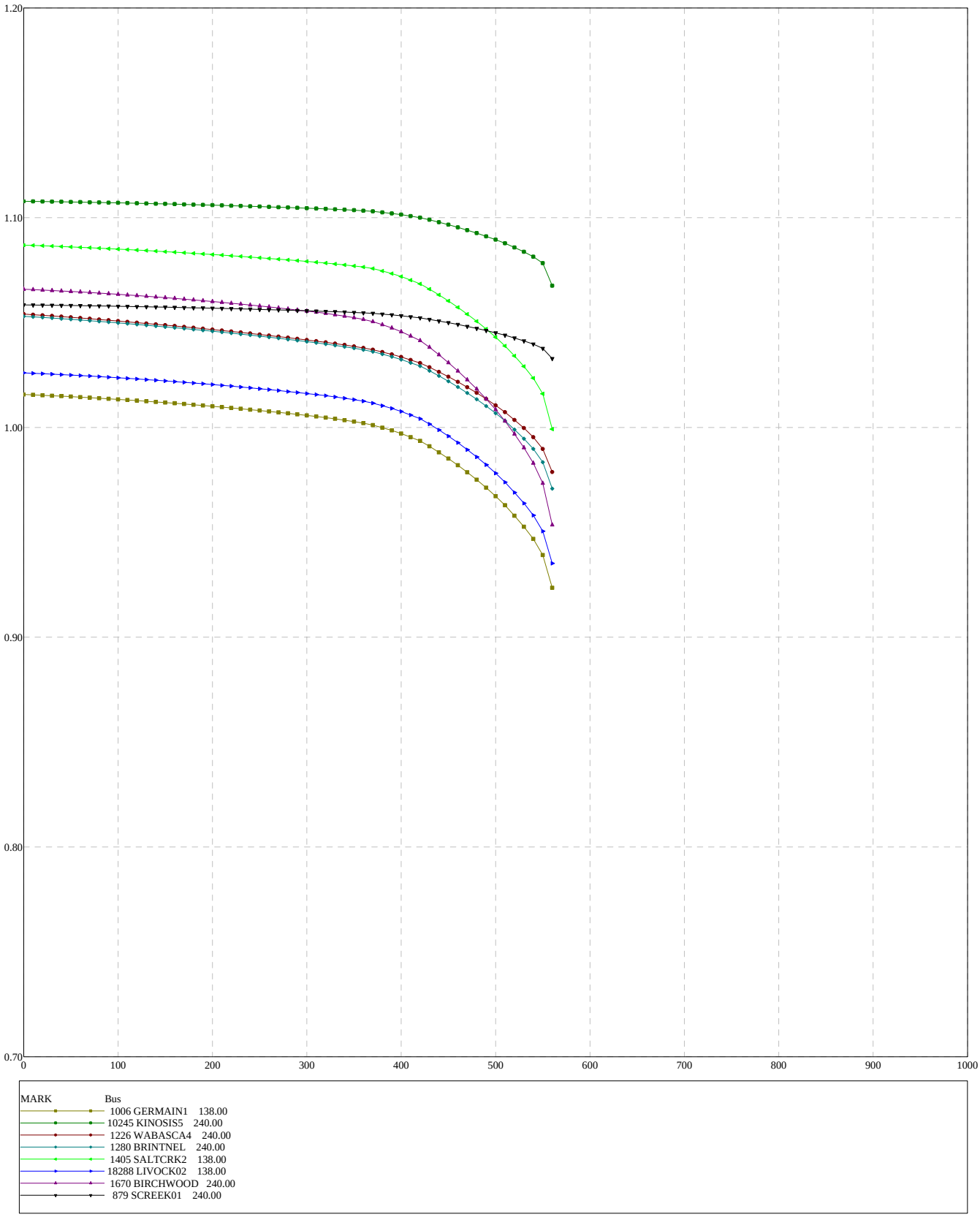

Figure K2-2020Sens-7

TASMO MODEL; OUTPUT GENERATED 2010-03-01 14:06:46
SWINGBUS 1520 FOR FC-2009-5:2021-04-30:19:24--1--1-0-0
FRI, JUN 24 2011 16:46

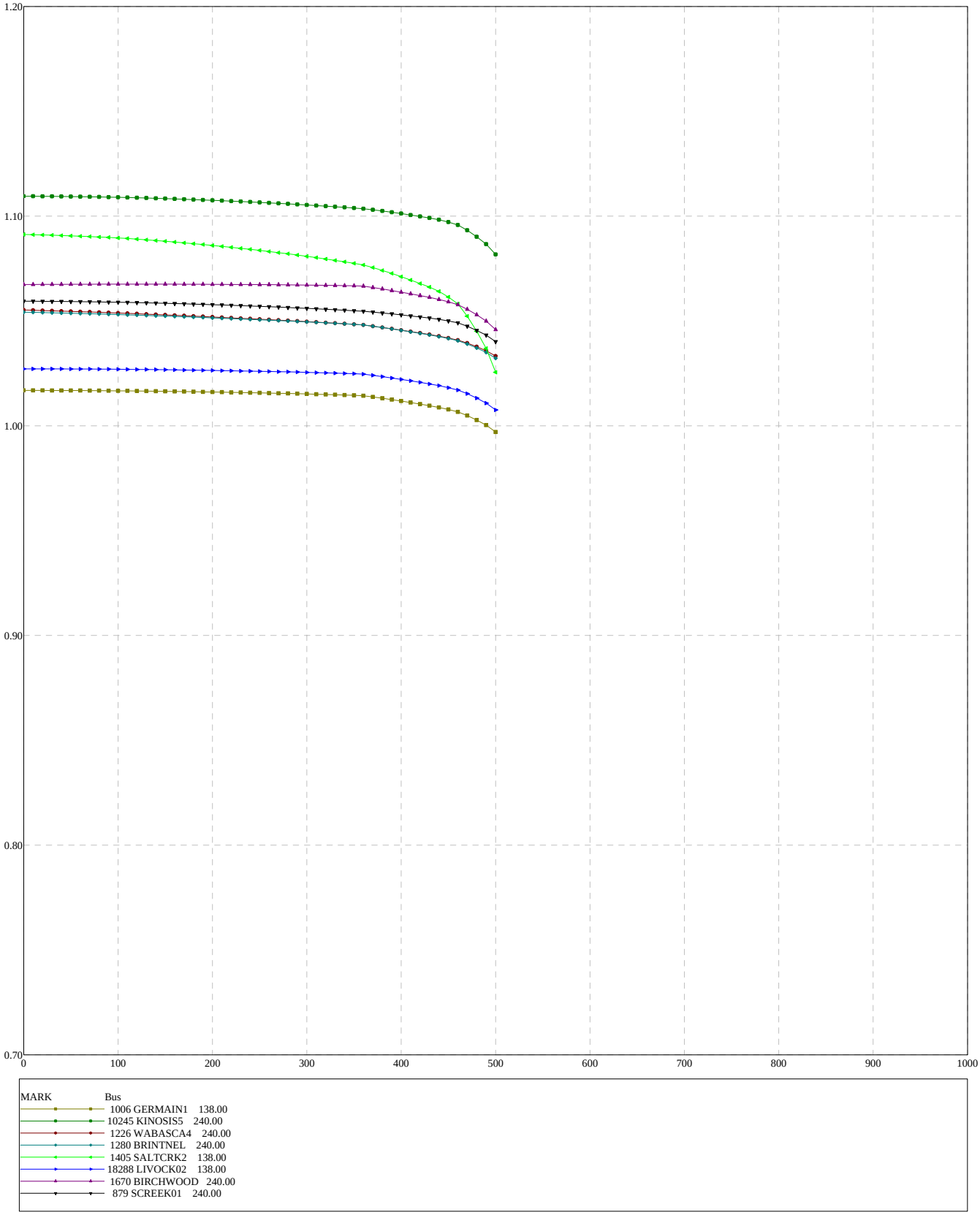

Figure K2-2020Sens-8

TASMO MODEL; OUTPUT GENERATED 2010-03-01 14:06:46
SWINGBUS 1520 FOR FC-2009-5:2021-04-30:19:24--1--1-0-0
FRI, JUN 24 2011 16:45

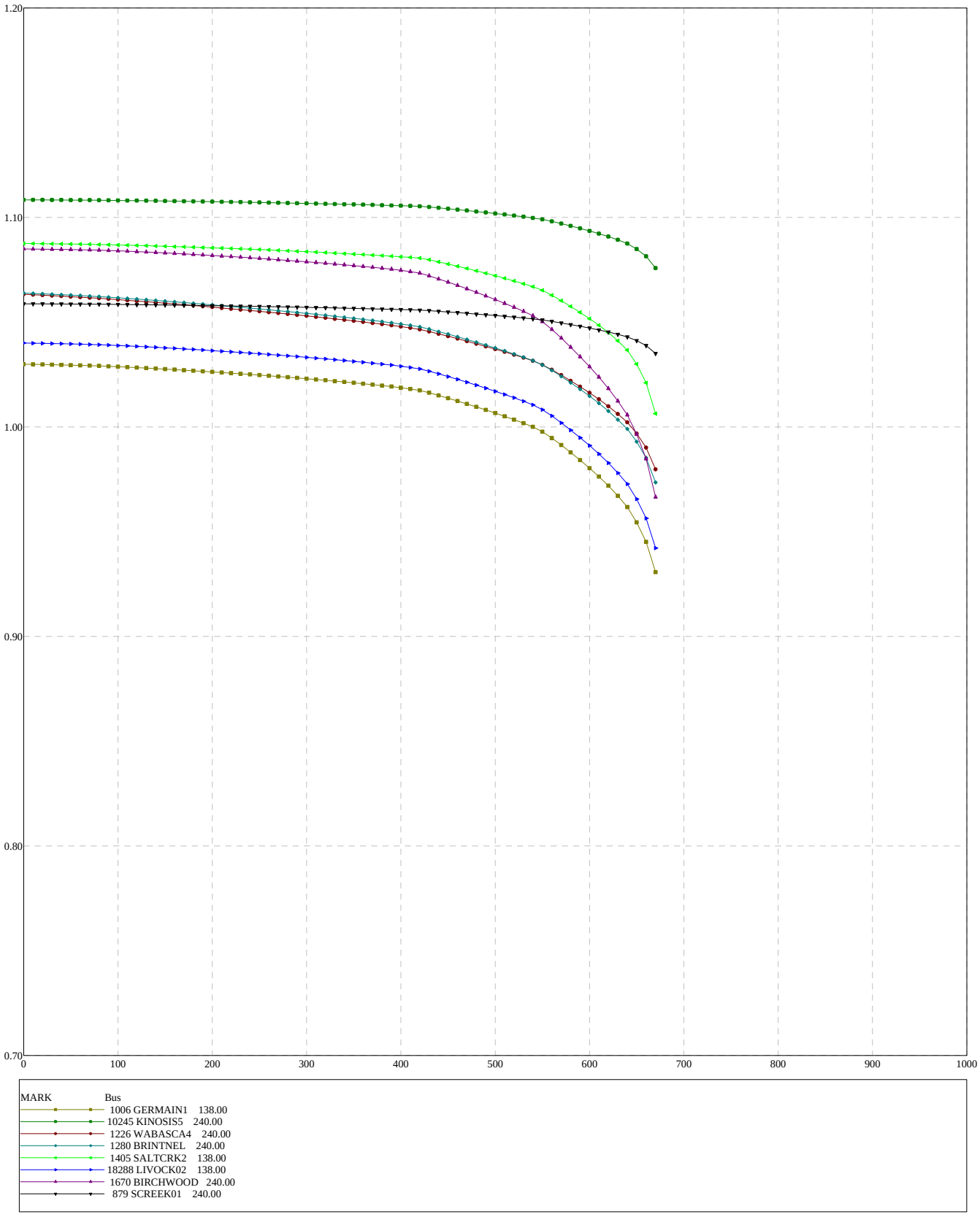

Figure K2-2020Sens-9

APPENDIX B

NORTHWEST FORT MCMURRAY SYSTEM PLANNING STUDY

LOAD and GENERATION FORECASTS

1 Introduction

1.1 The AESO's responsibilities with respect to forecasting the need for transmission in Alberta are described in Section 33(1) of the *Electric Utilities Act* and Section 8 of the *Transmission Regulation*. System Planning studies contained in the *Northwest Fort McMurray Transmission Development – Engineering Report* (Northwest Fort McMurray Study) use the load and generation forecasts described by this document. The load and generation forecasts prepared for this system study were prepared in accordance with the AESO Transmission Reliability Criteria principle that requires the design of the system to meet or exceed Reliability Criteria under credible worst-case loading and generation conditions.[1]

Load and generation forecasts in this document are a subset of the forecasts published separately by the AESO. The forecasts are found in the draft *2011 AESO Long-Term Transmission System Plan* (the Long-Term Plan). This document is available online at:

http://www.aeso.ca/downloads/AESO_LTTSP_Final_June_2011.pdf

1.2 The Study Area chosen for the Northwest Fort McMurray Study is a portion of AESO planning area 25 (Fort McMurray). Forecasts specifically developed for the Study Area are described in this report. The planning area resides in the AESO's Northeast planning region as described in more detail in Section 4.5.2 of the Long-Term Plan.

[1] AESO Transmission Reliability Criteria, Part II System Planning. March 11, 2005. Section 2.0

2 Historical Load

2.1 Table 2.1 summarizes historic winter load levels for the Study Area, Fort McMurray planning area, for the Northeast planning region, and for the Alberta Internal Load (AIL) system, at the time the Northeast planning region reached peak demand. As there are currently no transmission facilities in the study area, the historical loads are shown as zero.

Table 2-1: Historical Winter Load at Northeast Planning Region Peak (MW)

Year	Northwest Fort McMurray Study Area	Area 25 Fort McMurray	NE Planning Region	AIL System Load
2005 HX	0	803	2,026	8,595
2006 HX	0	1,046	1,908	8,931
2007 HX	0	1,046	1,979	9,133
2008 HX	0	1,162	2,101	9,075
2009 HX	0	1,298	2,227	9,587
2010 HX	0	1,322	2,261	9,791

HX = Historical. 2005 = Winter 2005/06, etc.

2.2 Table 2.2 summarizes summer load levels at the time the Northeast planning region reached peak demand.

Table 2-2: Historical Summer Load at Northeast Region Peak (MW)

Year	Northwest Fort McMurray Study Area	Area 25 Fort McMurray	NE Planning Region	AIL System Load
2005 HX	0	753	1,792	7,601
2006 HX	0	1,008	1,995	8,541
2007 HX	0	996	1,875	7,849
2008 HX	0	1,229	2,060	7,510
2009 HX	0	1,176	2,019	7,721
2010 HX	0	1,197	2,094	8,377
2011 HX	0	1,239	2,174	8,874

HX = Historical

3 Load Forecast

3.1 Northeast Planning Region and Planning Area 25 load growth is expected to continue into the foreseeable future, consistent with forecasts for continued investment in the oilsands sector. As such, region and area load growth rates are forecasted to well-exceed general provincial growth rates. Oilsands extraction operations are load intensive and consequently, region and planning area load is forecast to grow in large steps as new extraction operations are commissioned and begin commercial operations over coming years.

3.2 The AESO's regional and area forecasts have considered information from the Distribution Facility Owners (DFO) and oilsands lease owners in the area, other industrial services providers in the region and area, as well as other economic factors as documented in the AESO's latest corporate forecast, referred to as the *Future Demand and Energy Outlook (2009-2029)* (FC2009), published in February 2010.

3.3 Load forecasts used in the Northwest Fort McMurray Transmission Development Study are based on FC2009. The area northwest of the City of Fort McMurray contains significant established reserves that until recently, have not been considered for development. The area lies to the west of current established oilsands operations and is among the areas in the northeast region where significant oilsands investment is now being planned. The area is not currently served by transmission facilities. Therefore, the AESO developed subset forecasts for the Northwest Fort McMurray Study Area that considered current market participant requests for connection to the transmission system, as well as long-term oilsands development potential for the immediate area.

3.4 Table 3-1 summarizes FC2009 winter load levels used in the study for the Study Area, for the AESO planning area 25 (Fort McMurray), for the Northeast

planning region, and for the AIL system, at the time the Northeast region is expected to reach peak demand.

Table 3-1: FC2009
Winter Load at Northeast Planning Region Peak (MW)

Year	Northwest Fort McMurray Study Area	Area 25 Fort McMurray	NE Region	AIL System Load
2011 F	0	1,440	2,656	10,515
2012 F	0	1,657	2,927	11,016
2013 F	65	1,811	3,112	11,577
2014 F	145	1,942	3,263	12,102
2015 F	201	2,074	3,416	12,753
2016 F	201	2,224	3,597	13,331
2017 F	281	2,445	3,831	13,746
2018 F	302	2,553	3,958	14,163
2019 F	330	2,692	4,118	14,568
2020 F	366	2,782	4,226	14,963

F = Forecast. 2011 = Winter 2011/12, etc.

The average annual load growth rates for AESO planning area 25 (Fort McMurray) and Northeast planning region for the period from 2010 historical to 2020 forecast based on FC2009 are 7.9% and 6.5% respectively.

3.5 Table 3-2 summarizes FC2009 summer load levels used in the study for the Northwest Fort McMurray Study Area, AESO planning area 25 (Fort McMurray), for the Northeast planning region, and for the AIL system, at the time the Northeast planning region is expected to reach peak demand.

Table 3-2: FC2009
Summer Load at Northeast Planning Region Peak (MW)

Year	Northwest Fort McMurray Study Area	Area 25 Fort McMurray	NE Region	AIL System Load
2011 F	0	1,265	2,300	10,515
2012 F	0	1,418	2,530	11,016
2013 F	61	1,644	2,827	11,577
2014 F	135	1,795	3,001	12,102
2015 F	187	1,928	3,152	12,753

2016 F	187	2,087	3,307	13,331
2017 F	261	2,218	3,460	13,746
2018 F	281	2,418	3,670	14,163
2019 F	307	2,556	3,843	14,568
2020 F	340	2,685	3,988	14,963

F = Forecast

Table 3-4 lists the oilsands projects considered in the FC2009 2020 winter load forecast and their approximate location within the Northwest Fort McMurray Study Area. The list includes those oilsands projects that have been announced, applied to the AESO for connection, and/or applied to the Energy Resources Conservation Board. Loads are initially forecast to develop in the northern and southern portions of the study area as illustrated in Figure 3-1.

Table 3-4: Oilsands Projects for Consideration in Northwest Fort McMurray Study Area FC2009 Winter 2020

Company	Project	ISD Year Studied	North/South of Study Area	Oil Production (bpd)	Load Considered (MW)
Athabasca Oil Sands Company	Dover West (Carbonates)	2013	North	12,000	120
Dover Operating Corp.	Dover Central (Dover North)	2014	North	72,000	72
Dover Operating Corp.	Dover Central (Dover South)	2017	North	72,000	72
Dover Operating Corp.	MacKay	2013	South	105,000	82
Southern Pacific	McKay River	2014	South	12,000	20
Load Considered under FC2009 Study Area Forecast					366

Figure 3-1: Loads are initially forecasted to develop in the northern and southern portions of the Northwest of Fort McMurray Study Area[2]

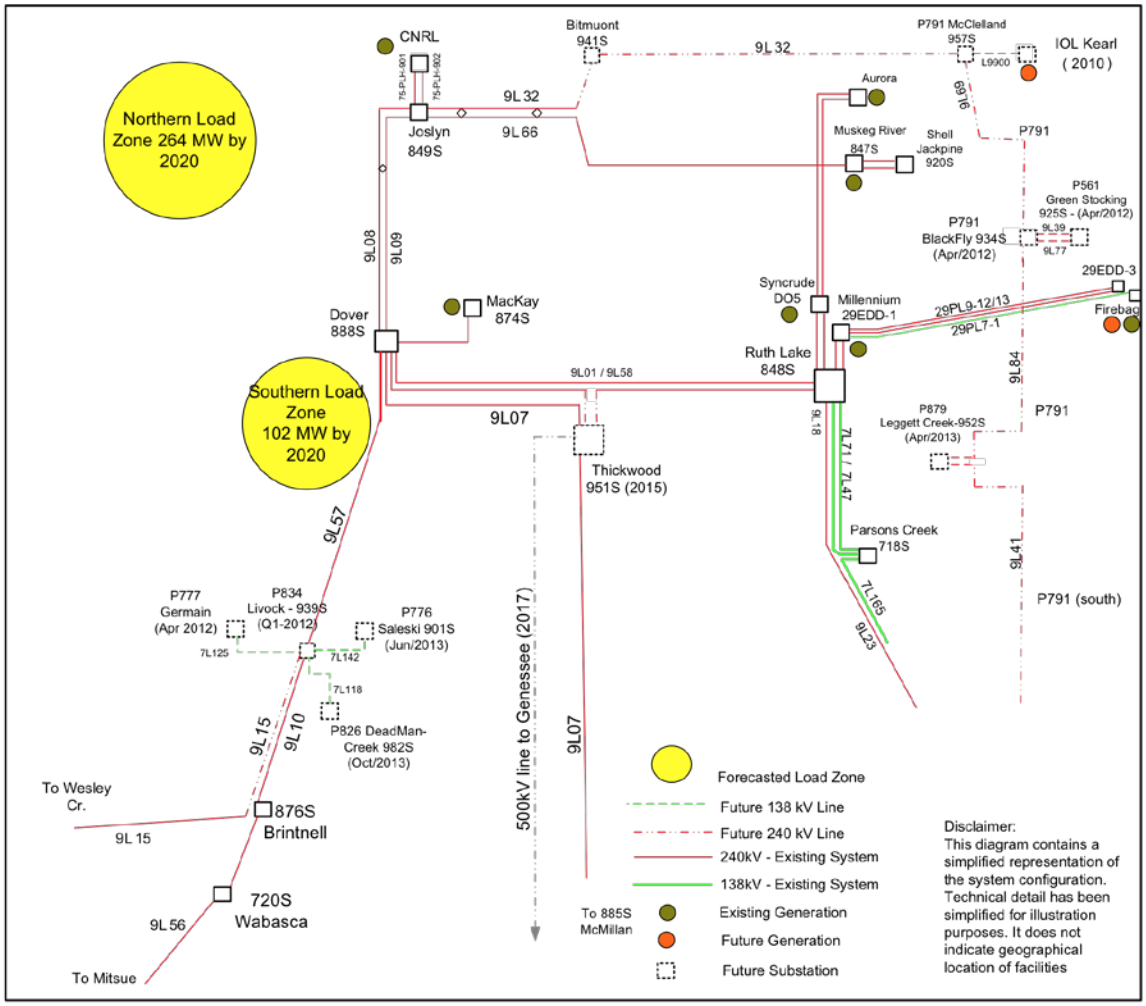

3.6 In consideration of: the geographic location of the study area which is within large oilsands reserves; information from oilsands lease operators that indicate that oilsands development in the area could be undertaken on a more aggressive scale by advancing current plans and expansions, building larger

[2] The forecasted load zones are provided for illustrative purposes only. It is not intended to represent a geographical area, nor is it intended to restrict the TFO in its siting and routing activities, to be completed as part of its facility proposal.

scale projects, and; that aggressive adoption of higher energy intensity extraction methods could result in higher demand from the area, the AESO prepared an Accelerated Load Growth sensitivity for use in system studies that assumes higher than forecast load growth rates in the area. To support the load forecast assumptions, the AESO completed a detailed review of all announced projects, spoke with oilsands lease holders in the study area and with other regional infrastructure providers. The AESO discounted projects depending on their stage of development to allow 100% of expected load from projects that have at least filed an application to the Energy Resources Conservation Board (ERCB) and 50% of expected load for developments that have not yet filed to the ERCB. The list of oilsands projects that have been announced, applied to the AESO for connection and/or applied to the Energy Resources Conservation Board is provided in Table 3-5 below. Such higher growth rates may have an effect on the need for, and timing of, the proposed transmission developments.

Table 3-5: Oilsands Projects for Consideration in Northwest Fort McMurray Study Area Accelerated Sensitivity (before 2020)

Company	Project	North/South of Study Area	Oil Production (bpd)	Potential Load Considered (MW)
Athabasca Oil Sands Company	Dover West (Carbonates)	North	12,000	120
Athabasca Oil Sands Company	Dover West (Clastics)	North	47,000	37
Dover Operating Corp.	Dover Central (Dover North)	North	72,000	72
Dover Operating Corp.	Dover Central (Dover South)	North	72,000	72
Sunshine Oilsands	Harper	North	1,000	1
Sunshine Oilsands	West Ells	North	50,000	43
Sunshine Oilsands	Thickwood	North	50,000	43
Sunshine Oilsands	Legend Lake	North	10,000	10
Dover Operating Corp.	MacKay	South	115,000	92
Southern Pacific	McKay River	South	24,000	40
Discounted Load Considered under accelerated load sensitivity				454

There are other oilsands leases in the region but potential load requirements to serve these leases before 2020 were not considered in the accelerated load sensitivity.

3.7 Although not used directly in system studies, Table 3-6 summarizes the long term potential load beyond 2020 considering continued development with announced projects and some consideration for all other oilsands leases in the region with bitumen production using SAGD and higher electricity intensive technology such as Thermal Assisted Gravity Drainage (TAGD).

Table 3-6: Longer Term Potential in Study Area

Year	Oilsands Production (bpd)	Potential Load (MW)
Beyond 2025	600,000	580 – 1,060

4 Generation Forecast

4.1 Current generation capacity in the Northeast planning region (planning areas 25, 27, 28 & 33) is nearly 3,000 MW. The majority of this generation is gas-fired cogeneration that provides electricity, heat and steam to oilsands operations. There is 270 MW of cogeneration capacity in the immediate vicinity of the Study Area.

4.2 Continued development of oilsands operations is expected to drive additional development of cogeneration in the Northeast planning region. As of September 2011, the AESO had received applications to connect over 1,000 MW of generation in the Northeast planning region.

Generation forecast assumptions used in the Northwest Fort McMurray study are based on the generation forecasts developed for the Long-Term Plan. It is anticipated that generation additions in the Northeast planning region, prior to 2020, will be made up of gas-fired cogeneration facilities. It is assumed that the

1,687 MW of cogeneration capacity additions included in the baseline generation forecast would be additions to support behind-the-fence load, with the bulk occurring at oilsands operations in the Northeast planning region. Three new generators, totaling 255 MW, are forecasted to develop in the Study Area. This new capacity, along with the existing Mackay1 (165 MW), 62-GTG-1 (92 MW) and 62-STG-1 (16 MW) unit, totals 528 MW of generation either within, or in close proximity to the Study Area by 2020/21. The timing of the specific generator additions were aligned with the timing of the oilsands developments in the Study Area, therefore minor adjustments were made to generator locations and start dates to reflect new oilsands development information prior to starting this study.

APPENDIX C TFO CAPITAL COST ESTIMATES

ATCO Electric

November 05, 2011

Greg Retzer
Alberta Electric System Operator (AESO)
2500, 330 - 5th Avenue SW
Calgary, AB T2P 0L4

RE: P1180 NW Ft McMurray Transmission Development NID Class Estimate

Ref: File # P1180 Rev 0 May 18, 2011

Greg,

In response to your request to provide NID class cost estimates (+/-30%) for the proposed NWFMTD (North West Fort Mc. Transmission Development) Project, we provide the following estimates aligned with expected facility applications.

ATCO Electric Ltd's estimates have been developed as per the AESO's NW Fort McMurray Transmission Development, NID Class Estimate Specification, May 18, 2011 R#0.

In general, these include:

Stage I: NWFMMN (North West Fort McMurray – North) Substation (2079S) and 52km of 240kV transmission work (ISD Q2/2014)

- Build the new proposed NWFMMN (North West Fort McMurray – North) 2079S substation with following major equipment:
  - Three 240 kV circuit-breakers and associated instrument transformers and manual disconnect switches
  - Three 240 kV motorized disconnect switches
  - As well as all necessary CTs and PTs, SCADA, protection and telecommunication.
- 9L76/9L08: Construct approximately 52 km of 240 kV, double circuit transmission line from 9L08 to the new NWFMMN (North West Fort McMurray – North) 2079S substation.

Stage II: NWFMMS (North West Fort McMurray – South) Substation (960S) and approx.200 meter 9L74/9L57, IN/ OUT from a double circuit line 9L57 (ISD Q2/2014).

- Build the new proposed NWFMMS (North West Fort McMurray – South) 960S substation with following major equipment:

10035 105 Street · Edmonton, Alberta, Canada · T5J 2V6
Tel: 780-420-7310 · Fax: 780-420-7400
www.atcoelectric.com

ATCO Electric

- Three 240 kV circuit breakers and associated instrument transformers and manual disconnect switches
- Three 240 kV motorized disconnect switches
- As well as all necessary CTs and PTs, SCADA, protection and telecommunications
- 9L74/9L57: Construct approximately 200 meters of 240 kV, double circuit transmission IN /OUT from the double circuit line 9L57.

Stage III: 9L95: Construct approximately 80 km of 240 kV, double circuit transmission line with one side strung between NWFMMN (North West Fort McMurray – North) 2079S substation and NWFMMS (North West Fort McMurray – South) 960S substation. (ISD Q2/2015)

Based on above scope of work, NID estimates costs will be;

- For Stage I: $156,067,000.00 (2014 $) (The detailed breakdown cost is attached herewith)
- For Stage II: $21,040,000.00 (2014 $) (The detailed breakdown cost is attached herewith)
- For Stage III: $189,185,000.00 (2014 - 2015 $) (The detailed breakdown cost is attached herewith)

We trust that the information presented herein meets your requirements at this time. Should you require additional information, please contact us at your convenience.

Yours truly,

Dinesh Sharma, P.Eng., PMP
i/c.Manager, Capital Transmission Projects

cc: Carey Kostyk
Chris Clark
Paul Vaillancourt

10035 105 Street · Edmonton, Alberta, Canada · T5J 2V6
Tel: 780-420-7310 · Fax: 780-420-7400
www.atcoelectric.com

Estimate Summary for Need Identification Document (NID)

Project: P1180 NWFMTD - NWFMMS (North West Fort McMurray – South) Sub 960S and Line 9L57/9L74 In /C
TFO: ATCO Electric
Prepared by: Dinesh Sharma
Date: Nov 4, 2011
Accuracy: +/- 30 % (2014 Dollars)

	System Portion	Customer Portion	TOTAL	Capital Maintenance
Transmission Lines	$ 2,598,966	$ -	$ 2,598,966	$ -
Substation Facilities	$ 12,505,000	$ -	$ 12,505,000	$ -
Telecommunication	$ 535,000	$ -	$ 535,000	$ -
Total Facility Costs	**$ 15,639,000**	**$ -**	**$ 15,639,000**	**$ -**
Owners Costs	$ 1,045,000	$ -	$ 1,045,000	$ -
Distributed Costs	$ 2,919,520	$ -	$ 2,919,520	$ -
Total Owners and Dist. Costs	**$ 3,964,520**	**$ -**	**$ 3,964,520**	**$ -**
Total Direct Costs	**$ 19,603,520**	**$ -**	**$ 19,603,520**	**$ -**
Salvage Costs	$ -	$ -	$ -	$ -
Other Costs				
Inflation	$ 434,000		$ 434,000	$ -
E&S	$ 1,002,000		$ 1,002,000	
AFUDC		$ -	$ -	$ -
Total Indirect Costs	**$ 1,436,000**	**$ -**	**$ 1,436,000**	**$ -**
TOTAL PROJECT COSTS	**$ 21,040,000**	**$ -**	**$ 21,040,000**	**$ -**

Assumptions and Risks

1. The Estimate is based on Preliminary Functional Specification - Rev 0 - 28.04.2011 in the AESO file no. P1180.
2. Pricing within the Estimate pricing reflects estimated 2014 $.
3. The Estimate reflects construction over one Winter construction season.
4. Estimate is based on the assumption that the Substation site is generally level and does not require significant fill and excavation.
5. It has been assumed that there will be no major easement or right-of-way issues for the proposed location of the Transmission Line.
6. The project will not encounter any issues with line or facilities outages that could have an adverse impact of the Transmission Line or Substation construction schedule.
7. Based on Geotech conditions of the area, certain level of anticipated geotech conditions expressed.
8. The Estimate is based on 5% ES & G. It could go as high as 9% as project progresses.
9. The Estimate is based on the assumption that access road is available and open to receive the equipment at site and that no access delays will be encountered.
10. Estimate assumes 80% driven piles, 15% Grillage and 5 % caissons piles.
11. Greater cost indexing in this region can impact to the project estimate.
12. The Estimate is based on the assumption that there will not be any greater adverse market conditions when the project progresses.

Estimate Summary for Need Identification Document (NID)

Project: P1180 NWFMTD - NWFMMN (North West Fort McMurray – North) Sub 2079S and Line 9L76
TFO: ATCO Electric
Prepared by: Dinesh Sharma
Date: Nov 4 2011
Accuracy: +/- 30 % (2014 Dollars)

	System Portion	Customer Portion	TOTAL	Capital Maintenance
Transmission Lines	$ 107,750,000	$ -	$ 107,750,000	$ -
Substation Facilities	$ 12,505,000	$ -	$ 12,505,000	$ -
Telecommunication	$ 545,000	$ -	$ 545,000	$ -
Total Facility Costs	**$ 120,800,000**	**$ -**	**$ 120,800,000**	**$ -**
Owners Costs	**$ 1,579,000**	$ -	**$ 1,579,000**	$ -
Distributed Costs	$ 22,831,900	$ -	$ 22,831,900	$ -
Total Owners and Dist. Costs	**$ 24,410,900**	**$ -**	**$ 24,410,900**	**$ -**
Total Direct Costs	**$ 145,210,900**	**$ -**	**$ 145,210,900**	**$ -**
Salvage Costs	$ -	$ -	$ -	$ -
Other Costs				
Inflation	$ 3,424,000		$ 3,424,000	$ -
E&S	$ 7,432,000		$ 7,432,000	
AFUDC		$ -	$ -	$ -
Total Indirect Costs	**$ 10,856,000**	**$ -**	**$ 10,856,000**	**$ -**
TOTAL PROJECT COSTS	**$ 156,067,000**	**$ -**	**$ 156,067,000**	**$ -**

Assumptions and Risks

1. The Estimate is based on Preliminary Functional Specification - Rev 0 - 28.04.2011 in the AESO file no. P1180.
2. Pricing within the Estimate pricing reflects estimated 2014 $.
3. The Estimate reflects Construction over one Winter construciton season.
4. Estimate is based on the assumption that the Substation site is generally level and does not require significant fill and excavation.
5. It has been assumed that there will be no major easement or right-of-way issues for the proposed location of the Transmission Line.
6. The project will not encounter any issues with line or facilities outages that could have an adverse impact of the Transmission Line or Substation construction schedule.
7. No special cost provisions are included in the Estimate for construction problems related to ground water, casing, boulders, frost heave or bedrock roblems.
8. The Estimate is based on the assumption that there will be no issues with the supply of project materials equipment and apparatus or unforeseen costs related to transportation of project materails and apparatus.
9. The Estimate is based on the assumption that there will be no issues with the supply of labour resources and subcontractor resources.
10. The cost of providing Trailers for accommodation during construction is not included in this Estimate.
11. The Estimate is based on the assumption that access road is available and open to receive the equipment at site and that no access delays will be encountered.
12. The Estimate for the Transmission Line reflect that a new design for tower structures will be implemented on the Project.
13. Foundation assumptions are that driven piles are used for all foundation applications. If grillage, concrete or any other foundation applications are required cost will be significantly higher.
14. Location of the substation can critically impact the cost for the site development (see # 4).
15. Access and interaction with Oil & Gas can impact delivery of material and labor resources on a Transmission project in this Region.
16. Availability of skilled labor can be a significant cost impact on a Transmission Project. The Estimate is based on the assumption that there will not be adverse market conditions when the project labour resources are procured.

Estimate Summary for Need Identification Document (NID)

Project: P1180 NWFMTD - 9L95 Loop between NWFMMS (North West Fort McMurray – South) & NWFMMN (North West Fort McMurray – North)Sub.

TFO: ATCO Electric
Prepared by: Dinesh Sharma
Date: Nov 4, 2011
Accuracy: +/- 30 % (2015 Dollars)

	System Portion	Customer Portion	TOTAL	Capital Maintenance
Transmission Lines	$ 144,391,000	$ -	$ 144,391,000	$ -
Substation Facilities	$ -	$ -	$ -	$ -
Telecommunication	$ -	$ -	$ -	$ -
Total Facility Costs	**$ 144,391,000**	**$ -**	**$ 144,391,000**	**$ -**
Owners Costs	$ 2,570,000	$ -	$ 2,570,000	$ -
Distributed Costs	$ 27,817,380	$ -	$ 27,817,380	$ -
Total Owners and Dist. Costs	**$ 30,387,380**	**$ -**	**$ 30,387,380**	**$ -**
Total Direct Costs	**$ 174,778,380**	**$ -**	**$ 174,778,380**	**$ -**
Salvage Costs	$ -	$ -	$ -	$ -
Other Costs				
Inflation	$ 5,398,000		$ 5,398,000	$ -
E&S	$ 9,009,000		$ 9,009,000	
AFUDC		$ -	$ -	$ -
Total Indirect Costs	**$ 14,407,000**	**$ -**	**$ 14,407,000**	**$ -**
TOTAL PROJECT COSTS	**$ 189,185,000**	**$ -**	**$ 189,185,000**	**$ -**

Assumptions and Risks

1. The Estimate is based on Preliminary Functional Specification - Rev 0 - 28.04.2011 in the AESO file no. P1180.
2. Pricing within the estimate pricing reflects estimated 2014 /2015$.
3. The Estimate reflects construction winter construction season.
4. The Estimate for the Transmission Line reflect the same double circuit 240 KV transmission tower as the North Fort Mc. project.
5. It has been assumed that there will be no major easement or right-of-way issues for the proposed location of the Transmission Line.
6. The project will not encounter any issues with line or facilities outages that could have an adverse impact of the Transmission Line or Substation construction schedule.
7. Based on Geotech conditions of the area, certain level of anticipated geotech conditions expressed.
8. The Estimate is based on 5% ES & G. It could go as high as 9% as project progresses.
9. The Estimate is based on the assumption that access road is available and open to receive the equipment at site and that no access delays will be encountered.
10. Estimate assumes 80% driven piles, 15% Grillage and 5 % caissons piles.
11. Greater cost indexing in this region can impact to the project estimate.
12. The Estimate is based on the assumption that there will not be any greater adverse market conditions when the project progresses.

APPENDIX D AESO PARTICIPANT INVOLVEMENT PROGRAM (PIP)

Northwest of Fort McMurray 240 kV Transmission Development – Participant Involvement Program

1. Overview

From May to November 2011, the AESO conducted a participant involvement program (PIP) as part of preparing the needs identification document (NID) for the need for transmission development in the area northwest of the city of Fort McMurray.

In accordance with the provisions set out in Alberta Utilities Commission (AUC) Rule 007, NID 13 and Appendix A – Public Notification – NID Applications, the AESO's PIP was designed to notify, provide information to, and as necessary, consult with stakeholders including all occupants, residents and landowners in areas where facilities could be developed, as well as with government agencies, organizations, industry companies and First Nations and Métis Nations listed below.

Section 2 describes the stakeholders who received information for the Participant Involvement Program. Section 3 describes the various communication and PIP activities used during the AESO's PIP, and Section 4 summarizes the feedback the AESO received.

The AESO has received no indication of concern from any party about the need for transmission system development in the area northwest of the city of Fort McMurray.

2. List of Stakeholders

The following stakeholders identified in the area northwest of the city of Fort McMurray were notified about the need for transmission development, and the AESO's transmission development plan for the area. Stakeholders were given the opportunity to provide input to the AESO:

- Residents, occupants, landowners and businesses in the area northwest of the city of Fort McMurray received an information package through direct unaddressed mail by postal code, including an open house invitation
- The following elected and administrative government officials at the local, municipal, and provincial levels, community organizations, and First Nations and Métis Nations, were provided with an information package, were invited to meet with the AESO to discuss the need for transmission system development in the area northwest of the city of Fort McMurray and were invited to the open house:
    - Regional Municipality of Wood Buffalo
    - MD of Opportunity
    - Regional Municipality of Wood Buffalo Regional Economic Development Alliance
    - Lesser Slave Lake Economic Alliance
    - Chipewyan Prairie First Nation
    - Fort McKay First Nation

2500, 330-5th Avenue SW, Calgary, Alberta T2P 0L4 Phone: 403-539-2450 Fax: 403-539-2949
www.aeso.ca www.poweringalberta.com

- Fort McMurray First Nation
- Métis Nation - Zone 1

A detailed list of stakeholders contacted is included in this appendix as Attachment 1.

3. Description of Communication Material and Activities

The AESO carried out a variety of PIP activities for the purpose of sharing information with stakeholders and gathering their feedback. Below is a list of the various PIP activities conducted by the AESO:

- Information package mailed through direct unaddressed mail by postal code
- Information package mailed directly to elected officials, community organizations, First Nations and Métis Nations
- Open house (1)
- Open House newspaper advertisements (3 publications, 3 consecutive weeks in two publications, 2 consecutive weeks in one publication)
- Information distributed was made available on AESO website Needs Identification Document page
- AESO Biweekly Stakeholder Newsletter
- Powering Alberta Public Engagement Website updates
- Notification of Filing newspaper advertisement (3 publications, 1 week)

The sections below describe the communication material used during the PIP, as well as the activities and events conducted.

3.1 AESO Need Overview for transmission system development

The AESO developed a need overview, which is an overview document that describes the need for transmission development in the area northwest of the city of Fort McMurray. The need overview explained that transmission system development is needed to serve industrial growth forecasted in the area. A copy of this document was posted to the AESO website (http://www.aeso.ca/transmission/23414.html) and is included in this appendix as Attachment 2.

2500, 330-5th Avenue SW, Calgary, Alberta T2P 0L4 Phone: 403-539-2450 Fax: 403-539-2949
www.aeso.ca www.poweringalberta.com

3.2 Direct unaddressed mail delivered by Postal Code

In May 2011, the AESO prepared mail-out packages that included the need overview, an invitation to an AESO open house including the date and location, and the AUC Information Brochure entitled "Public Involvement in Needs or Facilities Applications". These packages were delivered by Canada Post to 941 addresses.

3.3 Advertising

In June 2011, the AESO placed an advertisement in the Fort McMurray Today, the Fort McMurray Connect and the Fort Chipewyan Journal notifying readers of the open house date, location and time. In addition to these publications, the advertisement also appeared in one other publication which advertised for another open house occurring for a separate transmission system development. The AESO placed an advertisement in the same publications in October 2011, advising readers of the AESO's intention to file a NID with the Alberta Utilities Commission (AUC) for the Northwest of Fort McMurray 240 kV Transmission Development. Table 1 shows the dates and the publications in which the AESO advertised the open house and its intention to file a NID with the AUC.

Table 1: Newspaper Advertising Schedule

Publication	Open House Invitation	Notification of Intention to File with the AUC
Fort McMurray Today	Wednesday June 8, Tuesday June 14 & 21	Thursday, October 13
Fort McMurray Connect	Friday June 10, 17 & 24	Friday, October 7
Fort Chipewyan Journal	Tuesday June 14 & 21	Tuesday, October 11

The open house advertisements provided a general overview of the need, a map intended to illustrate the general area where transmission facilities could be located, contact information for the AESO, and the date and time of the open house. A copy of the open house advertisement was posted to the AESO website (http://www.aeso.ca/transmission/23414.html) and is included in this appendix as Attachment 3. The Notification of Filing advertisement was also posted to the AESO website and is included in this appendix as Attachment 4.

3.4 Open Houses

The AESO held one open house on June 28, 2011, in Fort McMurray, between 4 p.m. and 8 p.m. A total of 11 people attended, as measured by those who chose to sign-in and register plus the non-registered attendees noted by the AESO. AESO employees staffed the open house and escorted attendees through the Northwest of Fort McMurray 240 kV Transmission Development poster boards. The AESO staff

2500, 330-5th Avenue SW, Calgary, Alberta T2P 0L4 Phone: 403-539-2450 Fax: 403-539-2949
www.aeso.ca www.poweringalberta.com

members also recorded and responded to stakeholder comments, suggestions and questions. A representative from ATCO Electric Ltd., the transmission facility owner (TFO) in the area, was also available to answer questions regarding the role of the TFO. ATCO will also be conducting consultation with potentially affected parties in preparation of their facility application(s). Subsequently, ATCO and will file their facility application(s) with the AUC for approval to construct and operate the facilities required to address the need for transmission development in the area northwest of the city of Fort McMurray.

Each participant was asked to register and complete surveys before leaving each open house. The AESO prepared an *Open House Summary Report* that summarized the participant survey responses and included answers to frequently asked questions at the open house. The *Open House Summary Report* was sent to all the open house participants who provided their address (either email address or postal address) and either indicated they wished to receive a copy, or that they required further clarification relating to the need for transmission development. A copy of the *Open House Summary Report* was posted to the AESO website (http://www.aeso.ca/transmission/23414.html) and is included in this appendix as Attachment 5.

3.5 Ongoing Dialogue

Through the PIP activities described above, the AESO provided other opportunities for stakeholders to become involved in this application. These included a dedicated, toll-free stakeholder relations telephone line (888.866.2959) and a dedicated email address (stakeholder.relations@aeso.ca).

AESO contact information, along with the AESO's mailing address (2500, 330 5th Ave, SW, Calgary), website address (www.aeso.ca), and a privacy statement that describes how the AESO honours Alberta's Personal Information Protection Act, were included in all materials and correspondence related to this application.

Finally, the AESO published updates and other information associated with this application in its biweekly stakeholder newsletter, sent to stakeholders who have requested to receive this newsletter. Stakeholders can choose to receive the AESO's newsletter by signing up on the AESO website. The AESO will continue to inform stakeholders of ongoing application activities.

The AESO also published updates on its public engagement website, www.poweringalberta.com throughout the development of this application.

4. Responses to questions and comments

The AESO has received feedback and comments from stakeholders verbally during the open house, participant surveys, and meetings. The AESO has responded to comments and questions received during the open house, and has provided answers within its open house summary report, delivered to those open house attendees that requested a copy (Attachment 5). Questions relating to routing and siting of transmission facilities were redirected to ATCO. Table 2 includes some commonly asked questions, and comments received, and the AESO's responses.

2500, 330-5th Avenue SW, Calgary, Alberta T2P 0L4 Phone: 403-539-2450 Fax: 403-539-2949
www.aeso.ca www.poweringalberta.com

The AESO knows of no outstanding concerns regarding the need for transmission system development in the area northwest of the city of Fort McMurray.

Table 2: Responses to commonly asked questions and comments

Nature of question or comment	AESO response
Cost of transmission development	*"The Alberta Electric System Operator (AESO) plans the transmission system taking into account technical considerations, reliability standards, and operating and planning criteria. Where more than one potential technical solution exists for a given need, the AESO may consider other factors, such as cost comparisons to help determine the preferred transmission development."* For more details, see *Cost of transmission development* in Attachment 5.
AESO's planning process	*"The AESO constantly monitors and plans for the long-term needs of the system and prepares a Long-term Transmission Plan every two years. The Draft 2011 Long-term Transmission Plan is available on the AESO website at http://www.aeso.ca/transmission/22021.html. For convenience, information related to the Northwest of Fort McMurray Area development plan is located on pages 108 to 113."* For more details, see *AESO planning process* in Attachment 5.
Generation of electricity	*"Our province depends on new generation to meet growing electricity demand. The AESO's mandate is to connect generation approved by the AUC regardless of the type or location of generation. The AESO is responsible for ensuring that a robust and reliable transmission system is in place to carry electricity from where it is produced to where it is needed in advance of that need."* For more details, see *Generation in Alberta* in Attachment 5.
Siting and routing, landowner compensation, and environmental concerns	*Some stakeholders wanted more information on siting and specific transmission line routes, environmental effects, and the compensation for landowners affected by those routes. Such matters are the responsibility of the legal owners of transmission facilities (TFO), in this case ATCO".* Contact information for ATCO was also provided. For more details, see *Routing, landowner compensation and environmental concerns* in Attachment 5.
Consultation process	*"The AESO acts in the public interest of all Albertans and has no financial interest or investment of any kind in the power industry. As such, we make efforts to consult on transmission projects underway in the province."* For more details, see *Consultation* in Attachment 5.

2500, 330-5th Avenue SW, Calgary, Alberta T2P 0L4 Phone: 403-539-2450 Fax: 403-539-2949
www.aeso.ca www.poweringalberta.com

4. List of Attachments

- Attachment 1: List of Stakeholders Contacted
- Attachment 2: AESO Need Overview
- Attachment 3: AESO Open House Advertisement – Final Proof
- Attachment 4: AESO Notification of Filing Advertisement – Final Proof
- Attachment 5: AESO Open House Summary Report

2500, 330-5th Avenue SW, Calgary, Alberta T2P 0L4 Phone: 403-539-2450 Fax: 403-539-2949
www.aeso.ca www.poweringalberta.com

Attachment 1 – List of Stakeholders

List of Stakeholders

Information packages were distributed to residents, occupants, landowners and businesses within the following postal codes:

- T0P 1B0
- T0P 1C0
- T0P 1G0
- T0P 1H0
- T0P 1J0

Information packages were also distributed to the following government agencies, identified organizations and First Nations and Métis:

- Regional Municipality of Wood Buffalo
- MD of Opportunity
- Regional Municipality of Wood Buffalo Regional Economic Development Alliance (REDA)
- Lesser Slave Lake Economic Alliance
- Chipewyan Prairie First Nation
- Fort McKay First Nation
- Fort McMurray First Nation
- Métis Nation - Zone 1

Attachment 2 – AESO Need Overview

Need for Transmission System Development in the Area Northwest of the City of Fort McMurray
Information for Potentially Affected Stakeholders

Why am I receiving this Information?

The Alberta Electric System Operator (AESO) has identified the need to expand the transmission system in the area Northwest of the City of Fort McMurray. You are receiving this information because you may be in the proposed transmission development area.

The following map outlines the general area where transmission development is being planned. However, the exact routing and siting of facilities is not yet determined.

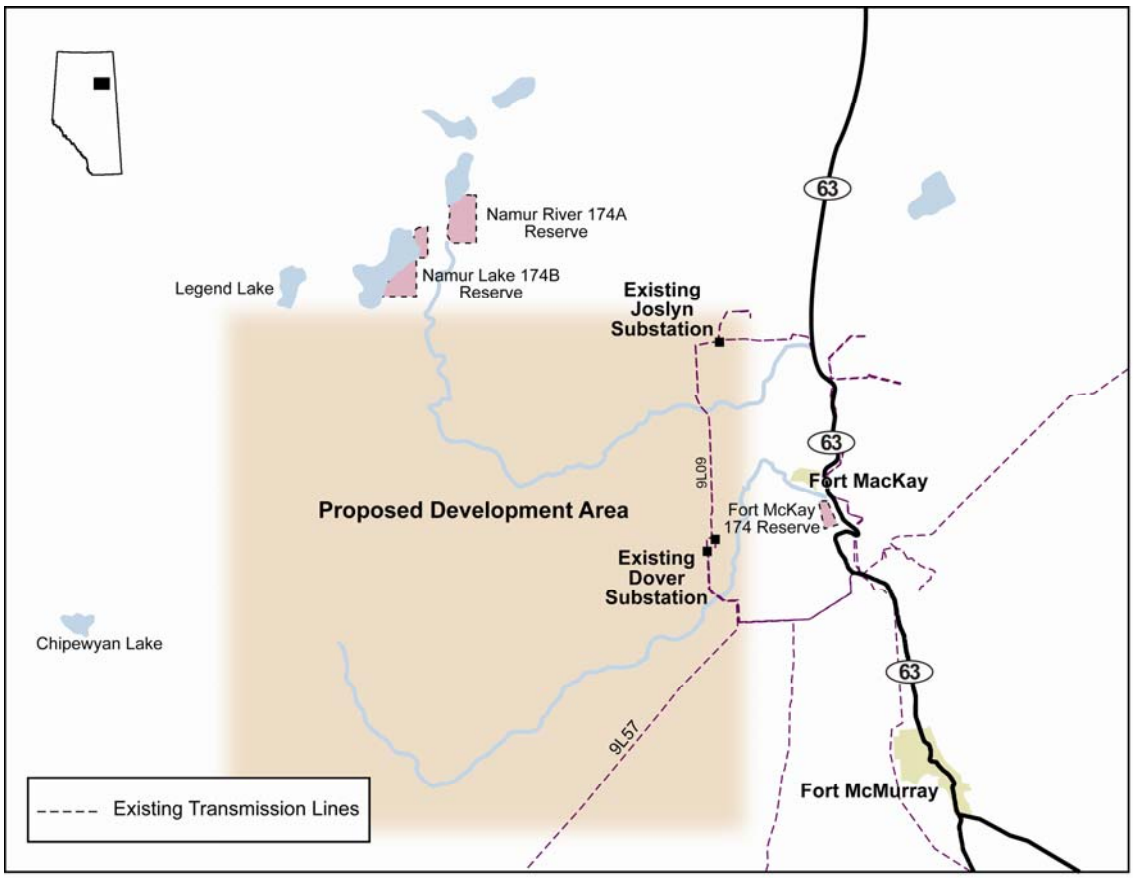

2500, 330-5th Avenue SW, Calgary, Alberta T2P 0L4 Phone: 403-539-2450 Fax: 403-539-2949
www.aeso.ca www.poweringalberta.com

About the AESO

Alberta's transmission system, sometimes referred to as the Alberta Interconnected Electric System (AIES), is planned and operated by the AESO. The transmission system comprises the high-voltage lines, towers and equipment (generally 69kV and above) that transmit electricity from generators to lower voltage systems that distribute electricity to cities, towns, rural areas and large industrial customers.

The AESO's role is to maintain safe, reliable and economic operation of the AIES. The AESO's planning responsibility includes determining the need for transmission system development and the manner in which that need is met. The AESO is also mandated to facilitate the interconnection of qualified market participants to the AIES. The AESO is regulated by the Alberta Utilities Commission (AUC) and must apply to the AUC for approval of its needs identification documents (NID). The NID process is described below. More information can be found on the AESO's website at:
http://www.aeso.ca/transmission/8969.html

Why is transmission system development needed in the area Northwest of the City of Fort McMurray?

Expansion of the transmission system is needed to serve developing electricity-intensive industrial growth. Oilsands extraction facilities and related industrial developments are proceeding into areas where there are currently no transmission system facilities to provide electrical service and connect future industrial customers. The AESO forecasts that the electricity demand in this area could be in the range of 250 MW to 450 MW by 2020. New industrial customers will require connection to the transmission system beginning as early as 2013.

How will the AESO address this need for transmission system development?

The AESO is currently preparing a transmission development plan for the area that includes developing a 240kV looped system extending west from existing transmission facilities between Dover 888S and Joslyn 849S substations, to serve future oilsands extraction operations and related industry. This area development plan includes the addition of two new 240 kV substations and approximately 125 – 175 km of 240kV transmission lines. Some modifications to existing transmission facilities will be needed to tie-in new developments to the existing transmission system. Connections of new industrial loads to the proposed transmission system in the area will be driven by the customer requirements and timelines.

The AESO's development plan for the area is designed to create a transmission system to connect new customers in a timely manner and to reliably serve future demand for electricity as industrial development progresses. The plan is expected to address the transmission development needs in the area for at least the next 10 years. These plans are consistent with the AESO's broader transmission development plans for the province. This transmission system development is expected to begin service in 2013.

Where might the new transmission facilities be located?

While the AESO is responsible for identifying that transmission system development is needed, ATCO Electric Ltd. (ATCO), as the legal owners of the transmission facilities (TFO) in the area, is responsible for detailed siting and routing, constructing, operating and maintaining the associated transmission facilities.

Planning for the necessary transmission development to serve the expanding needs of the northwest of Fort McMurray area is in the early stages and ATCO has not yet begun route and site selection for the proposed development.

2500, 330-5th Avenue SW, Calgary, Alberta T2P 0L4 Phone: 403-539-2450 Fax: 403-539-2949
www.aeso.ca www.poweringalberta.com

What is the process for planning, consultation and approval of new and modified transmission facilities?

As consultation and planning continues, you will receive additional information and have opportunities to learn more about the need for this development at one or more public open houses. Open house invitations will be published in local newspapers and posted on the AESO's website at www.aeso.ca. The AESO will seek the AUC's approval of the need for this development in the fall of 2011.

The AESO will direct ATCO to begin route and site selection after finalizing details on its proposed transmission development. ATCO will consult with the public and interested stakeholders regarding possible transmission line routes and substation locations to construct the AESO's proposed development. ATCO will then file detailed line routes and substation locations with the AUC for approval.

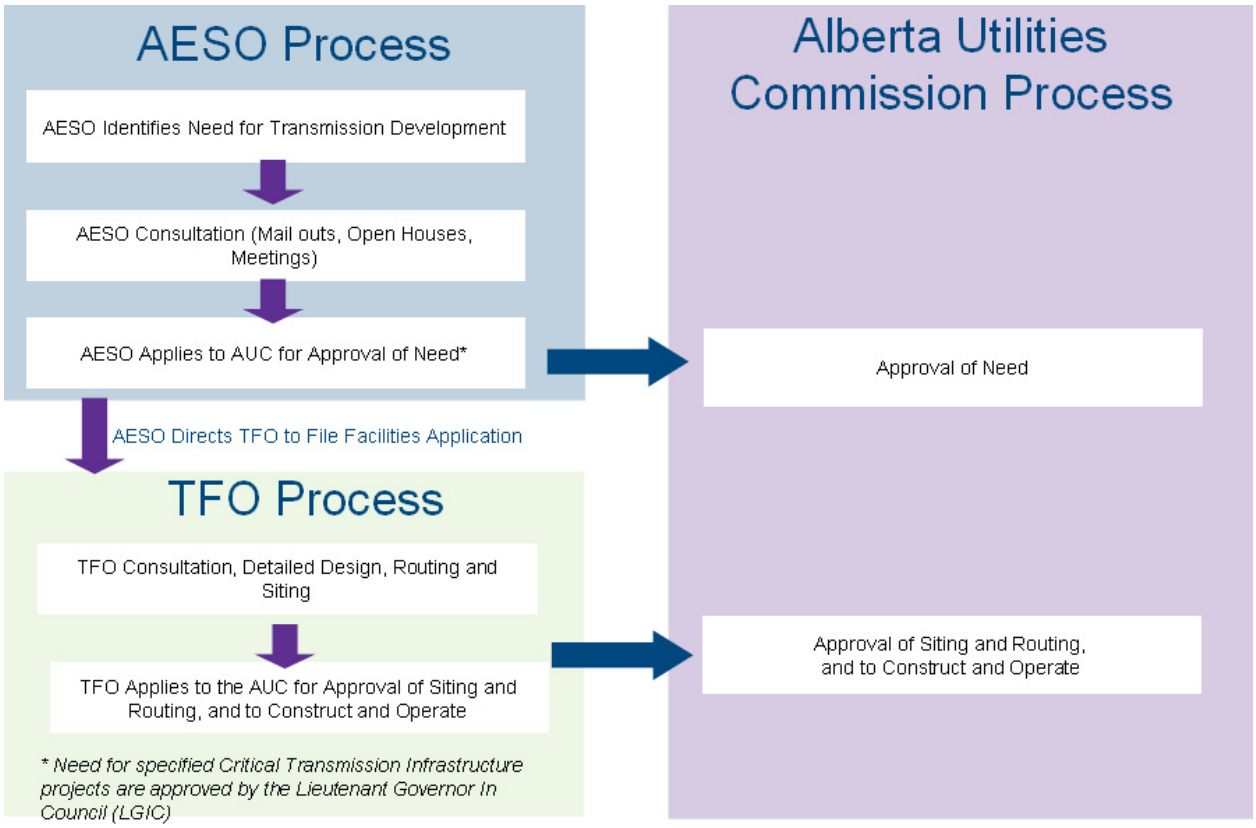

Information about AUC approval proceedings and how to get involved in the AUC application process can be found on the AUC's website at: http://www.auc.ab.ca/involving-albertans/Pages/default.aspx

2500, 330-5th Avenue SW, Calgary, Alberta T2P 0L4 Phone: 403-539-2450 Fax: 403-539-2949
www.aeso.ca www.poweringalberta.com

Further Information

The AESO appreciates your views on this need for transmission system development and your comments are encouraged. If you have any questions or comments about the need for this transmission system development in this area or the AESO's pending application regarding this need, please contact:

Brandy Eagleson

AESO Stakeholder Relations 1-888-866-2959

stakeholder.relations@aeso.ca

2500, 330 – 5th Avenue SW Calgary, Alberta T2P 0L4

The AESO is committed to protecting your personal privacy in accordance with Alberta's Personal Information Protection Act. Any personal information collected by the AESO with regard to this project may be used to provide you with further information about the project, may be disclosed to the Alberta Utilities Commission (and as a result, may become public), and may also be disclosed to AltaLink and ATCO as the legal owners of transmission facilities in your area. If you have any questions about how the AESO will use and disclose your personal information, please contact us at 1-888-866-2959 or at stakeholder.relations@aeso.ca

Attachment 3 –Open House Invitation Advertisement– Final Proof

You're invited...we're listening

The AESO Invites You to Open Houses for Transmission Development in the Christina Lake and Northwest of Fort McMurray areas

NORTHWEST OF FORT MCMURRAY AREA TRANSMISSION SYSTEM DEVELOPMENT

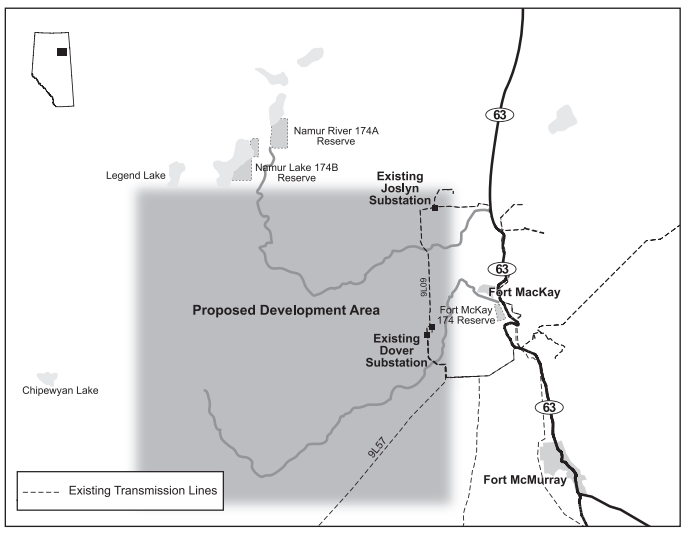

Fort McMurray
June 28, 2011 4 pm - 8 pm
Wood Buffalo Community Village
194 Grenfell Crescent, Fort McMurray, AB T9H 1G7

CHRISTINA LAKE AREA TRANSMISSION SYSTEM DEVELOPMENT

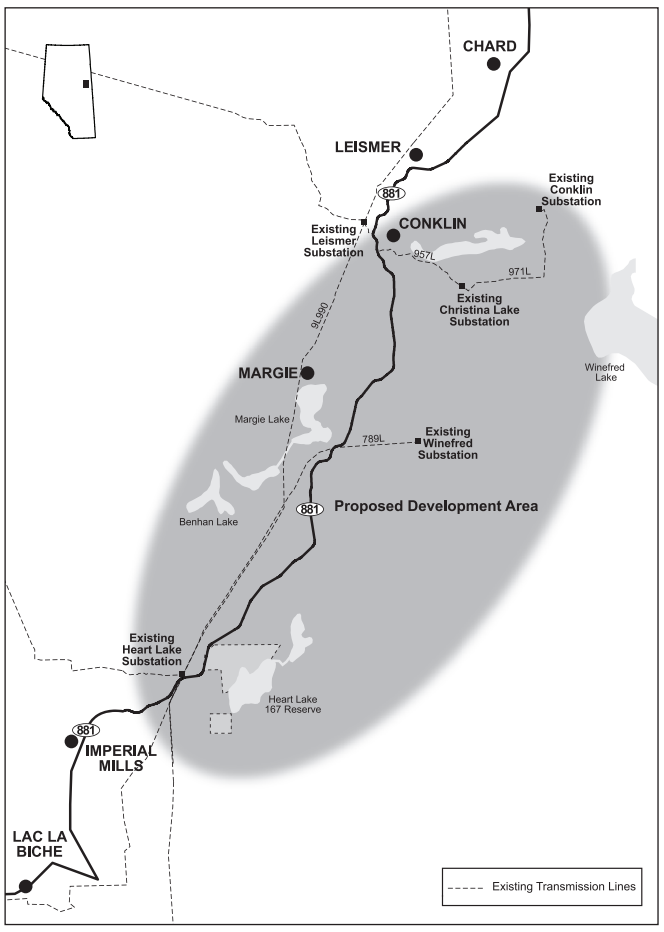

Conklin
June 29, 2011 4 pm - 8 pm
Conklin Community Hall
245 Northland Drive, Conklin, AB T0P 1H0

*The maps above show the general areas where the Alberta Electric System Operator (AESO) has identified a need for transmission development. The maps do not identify proposed transmission line locations or proposed substation locations.**

In our role as the planner of the transmission system for all Albertans, the AESO has identified the need for transmission system development in the Christina Lake and Northwest of Fort McMurray areas. These developments are needed to meet the growing demand for electricity from industrial growth in the area.

Please join us at any of the events listed above. AESO representatives will be available to discuss the need for transmission development, answer your questions, listen to your opinions and receive your input.

After receiving stakeholder input, the AESO will prepare and file a needs identification document with the Alberta Utilities Commission (AUC) for approval; filing is planned for late summer or early fall of 2011.

*AltaLink Management Ltd. (AltaLink), and ATCO Electric Ltd. (ATCO), as the legal owners of the transmission facilities (TFO) in the area, will consult with the public and interested stakeholders regarding possible transmission line routes and substation locations to meet the need for development identified by the AESO. AltaLink and ATCO will then file detailed line routes and substation locations with the AUC for approval.

For more information about the AESO, please visit our website at www.aeso.ca or contact the AESO at 1-888-866-2959 or stakeholder.relations@aeso.ca. For general information about Alberta's electrical system, please visit our website www.poweringalbertans.ca.

aeso
ALBERTA ELECTRIC SYSTEM OPERATOR

tmpworldwide
THE DIGITAL BRAND AUTHORITY
Artist: 2N
Production Only
Docket: 103147
Date: Jun 1, 2011
Size: 5.71" (x 221)
Proof: 2
1 of 2
Publication(s):
FtMac Today

Attachment 4 –Notice of Filing Advertisement – Final Proof

Notification of AESO Regulatory Filing Addressing the Need for Transmission System Development in the Area Northwest of the City of Fort McMurray

The Alberta Electric System Operator (AESO) advises you of its intention to file its Northwest of Fort McMurray 240 kV Transmission Development Needs Identification Document (NID) with the Alberta Utilities Commission (AUC) on or after October 27, 2011.

The AESO has identified the need to expand the transmission system to serve industrial growth in the area northwest of the city of Fort McMurray. The AESO has prepared a transmission development plan for the area that includes developing a 240 kV looped system to reliably serve new oilsands extraction facilities and related industry. The AESO's plan includes the addition of two new 240 kV substations and approximately 125 – 175 km of new 240 kV transmission lines. Some modifications to existing transmission substations to tie-in new developments into the existing system are also required.

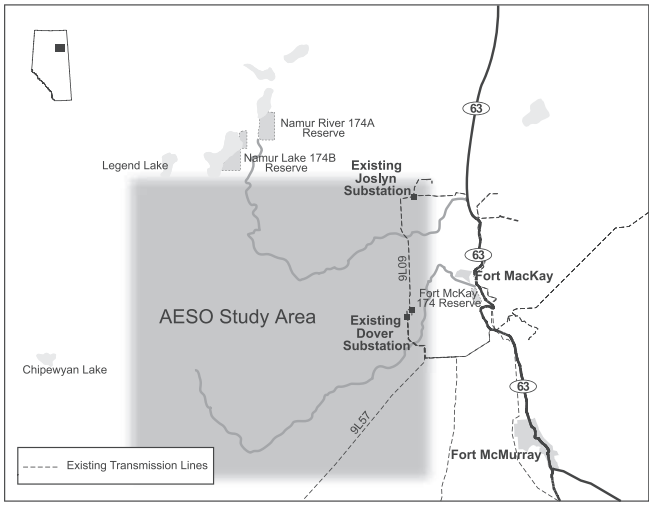

*The map above indicates the approximate area where the need for transmission development has been identified. ATCO Electric Ltd., the transmission facility owner in the area, will propose specific substation sites and transmission line routes that may be inside or outside the study area shown.**

The AESO presented this need to stakeholders, including residents, occupants and landowners in the area northwest of the city of Fort McMurray from May to October 2011. The AESO has considered feedback gathered from stakeholders, and technical and cost considerations, and its application to the AUC will consider these factors. Once filed, the NID will be posted on the AESO website at http://www.aeso.ca/transmission/23414.html.

*In separate application(s) to be filed later with the AUC, ATCO Electric Ltd., the transmission facility owner, will apply for approval of the substation sites and transmission lines routes as well as for approval to construct and operate the specific transmission facilities associated with this filing. Matters of routing and siting are not part of the AESO's NID application.

Please visit our website, www.aeso.ca for more information, or contact the AESO at 1-888-866-2959 or stakeholder.relations@aeso.ca.

aeso
ALBERTA ELECTRIC SYSTEM OPERATOR

tmpworldwide
THE DIGITAL BRAND AUTHORITY

Artist: 2N

Production Only

Docket: 103161

Date: Sep 28, 2011

Size: 5"

Proof: 1.1

1 of 1

Publication(s):

FtMacTod FtMacCon FtChip

Attachment 5 –Open House Summary Report

August 11, 2011

Dear Stakeholder:

Re: **Need for Transmission Development in the area northwest of the City of Fort McMurray**

In June 2011, the Alberta Electric System Operator (AESO) hosted an open house to discuss the need for transmission development in the area northwest of the City of Fort McMurray. Eleven people were able to attend. As an attendee at the open house, we are sending you this letter because you filled out a participant survey and requested an open house summary.

The purpose of this letter is to highlight the feedback we heard at these sessions, provide some information to address some of the questions most commonly asked at the open house, and to outline the next steps involved in seeking the Alberta Utilities Commission's (AUC) approval for this development.

There are three attachments to this letter:

1. Open House Summary
2. Answers to Commonly Asked Questions
3. A copy of the Need Overview titled *"Need for Transmission System Development in the area northwest of the City of Fort McMurray – Information for Potentially Affected Stakeholders"* that the AESO sent to potentially affected stakeholders by direct unaddressed mail around the end of May.

In the fall of 2011, the AESO expects to file a Needs Identification Document (NID) with the AUC outlining the necessity for expansion of the transmission system to serve developing electricity-intensive industrial growth in the area. The AESO's NID will seek approval of the need for transmission development.

(continued on reverse)

2500, 330-5th Avenue SW, Calgary, Alberta T2P 0L4 Phone: 403-539-2450 Fax: 403-539-2949
www.aeso.ca www.poweringalberta.com

The NID will not include specific line routes or facility locations. Route selection and facility locations are the responsibility of ATCO Electric Ltd. (ATCO). ATCO is also required to submit an application to the AUC for approval. These applications are known as facilities applications and will seek AUC approval to construct and operate the transmission facilities associated with the AESO's NID. This application will be submitted sometime after the AESO submits its NID to the AUC. As part of preparing the facilities application, ATCO will consult with potentially affected stakeholders.

We believe anyone potentially affected by transmission planning should have the opportunity to participate in the process and provide input. Should you have any questions, please contact Brandy Eagleson by email at brandy.eagleson@aeso.ca or by phone at 403-539-2773.

Yours truly,

Mark Burchby
Program Manager, Project Delivery North

2500, 330-5th Avenue SW, Calgary, Alberta T2P 0L4 Phone: 403-539-2450 Fax: 403-539-2949
www.aeso.ca www.poweringalberta.com

Attachment One - Open House Summary

On June 28, 2011, the AESO hosted a public open house in Fort McMurray at the Wood Buffalo Community Village, to provide information about, and seek perspectives on the need to develop the transmission system in the area. Representatives from ATCO Electric Ltd., the legal owner of the transmission facilities (TFO), also took part in these sessions. All participants at these events were invited to fill out a participant survey to give us their feedback. The AESO received five completed surveys.

Participant Survey Results from Open Houses

Attendees were asked how they heard about the open houses:

Direct Mail	2
Newspaper Advertisement	0
Word of Mouth	3
Other	0

Attendees were asked to comment on the helpfulness of materials used at the open house:

	Very	Somewhat	Not at all
Were the displays helpful in understanding the proposed project?	5	0	0
Was staff helpful in answering questions?	5	0	0

Attendees were asked to comment on the adequacy of the amount of information provided at the session:

The amount of information provided at the session I attended was:	
Just right	5
Too much	0
Too little	0

2500, 330-5th Avenue SW, Calgary, Alberta T2P 0L4 Phone: 403-539-2450 Fax: 403-539-2949
www.aeso.ca www.poweringalberta.com

Attendees were asked to comment on the adequacy of the level of information provided at the session:

The level of information provided at the session I attended was:	
Just right	5
Too technical	0
Too conceptual	0

What did we hear?

Most of the questions raised at the open houses related to transmission facilities, such as questions about routing and environmental impacts. These topics are best addressed by ATCO, who will be consulting with the public as part of preparing its facilities application. The most common questions about the need for development related to cost, reliability and future development. Experts were available at the open house to answer questions. For your reference, we are sending you the attached sheet that captures the answers to the questions most commonly asked at the open house.

What happens now?

Having consulted with the public and reviewed the feedback, the AESO is preparing a Needs Identification Document (NID). The NID will be filed for approval by the Alberta Utilities Commission (AUC) in the fall of 2011. Once the NID is filed with the AUC, it will be posted on the AESO website at http://www.aeso.ca/transmission/23414.html. When the AUC is satisfied that the NID is complete, they will issue a Notice of Application inviting parties to file submissions. For more information on public involvement in the AUC application process, please visit http://www.auc.ab.ca/involving-albertans/getting-involved/Pages/FacilityApplicationProcess.aspx.

Contact Information

If you have any further questions or concerns, please contact Brandy Eagleson at brandy.eagleson@aeso.ca or by phone at 403-539-2773.

2500, 330-5th Avenue SW, Calgary, Alberta T2P 0L4 Phone: 403-539-2450 Fax: 403-539-2949
www.aeso.ca www.poweringalberta.com

Attachment Two - Answers to Commonly Asked Questions

Cost of transmission development

The Alberta Electric System Operator (AESO) plans the transmission system taking into account technical considerations, reliability standards, and operating and planning criteria. Where more than one potential technical solution exists for a given need, the AESO may consider other factors, such as cost comparisons to help determine the preferred transmission development.

The AUC reviews cost estimates submitted as part of the NID, and as part of facilities applications submitted by the legal owner of transmission facilities (TFO).

It should be noted that the cost of transmission is paid by all ratepayers based on their use of the transmission system. The approximate division of transmission system costs is as follows:

- Industrial – 61 per cent
- Commercial – 19 per cent
- Residential – 16 per cent
- Farms – 4 per cent

AESO planning process

Currently, our transmission system is running near capacity in many areas. Over the next 20 years, we expect an additional 11,500 MW of generation to be added to the grid. In that same time period, we expect overall demand for electricity to double. Upgrades and new developments are needed in order to expand the transmission system to connect new customers, meet growing electricity demands, and maintain the overall reliability of the system now and into the future.

Regarding the area northwest of the City of Fort McMurray, transmission system development is needed to serve industrial growth forecasted in this area. Oilsands extraction facilities and related industrial developments are proceeding into areas where there are currently no transmission system facilities to provide electrical service and connect future industrial customers. The AESO forecasts that the electricity demand in this area could be in the range of 250 MW to 450 MW by 2020. New industrial customers will require connection to the transmission system beginning as early as 2013.

The Northwest of Fort McMurray Area Transmission Development Plan will help to ensure that the Alberta Interconnected Electric System (AIES) is able to reliably meet that future demand. The AESO constantly monitors and plans for the long-term needs of the system and prepares a *Long-term Transmission Plan*

2500, 330-5th Avenue SW, Calgary, Alberta T2P 0L4 Phone: 403-539-2450 Fax: 403-539-2949
www.aeso.ca www.poweringalberta.com

every two years. The *Draft 2011 Long-term Transmission Plan* is available on the AESO website at http://www.aeso.ca/transmission/22021.html. For your convenience, information related to the Northwest of Fort McMurray Transmission development plan is located on pages 108 to 113 and referenced as the Livock-Joslyn project.

Generation in Alberta

Our province depends on new generation to meet growing electricity demand. The AESO's mandate is to connect generation approved by the AUC regardless of the type or location of generation. The AESO is responsible for ensuring that a robust and reliable transmission system is in place to carry electricity from where it is produced to where it is needed in advance of that need.

The AESO was asked about localized generation, which is the practice of placing generation near where the electricity is consumed. In the Fort McMurray area, some industrial electricity users also install their own generating facilities to meet some, or all of their electricity demand. In some cases, an industrial user may have surplus generating capacity that it sells to the market. The generator must be connected to the transmission system to enable its output to be sold to the market for consumption by other users.

Routing, landowner compensation and environmental concerns

Many stakeholders at our open houses wanted more information on specific transmission line routes, the compensation for landowners affected by those routes. Such matters are the responsibility of the legal owners of transmission facilities (TFO), in this case ATCO. An ATCO representative was available at AESO's open house to answer such questions. If you were unable to talk to AltaLink or ATCO at the open house, they can be reached at consultation@atcoelectric.com or toll-free at 1-855-420-5775

ATCO will be developing applications for submission to the AUC at a later date. The applications will include the development of detailed design, siting and routing for the preferred alternative outlined above. Additional public consultation will be required as part of this process. Once completed, detailed line routes and substation locations will be filed with the AUC for approval.

Consultation

The AESO acts in the public interest of all Albertans and has no financial interest or investment of any kind in the power industry. As such, we make efforts to consult on transmission projects underway in the province. In the case of the Northwest of Fort McMurray Transmission development, the AESO mailed more than 900 stakeholder packages throughout the region. We also held an open house to explain the need for transmission system development in the area. We provided information and offered to meet directly, Alberta First Nations and Métis, and municipal and provincial government representatives.

2500, 330-5th Avenue SW, Calgary, Alberta T2P 0L4 Phone: 403-539-2450 Fax: 403-539-2949
www.aeso.ca www.poweringalberta.com

APPENDIX E ENVIRONMENTAL AND SOCIO-ECONOMIC OVERVIEW

LAND IMPACT ASSESSMENT

for the

Proposed Northwest Fort McMurray Transmission Development Project (NWFMTD)

Prepared for the
Alberta Electric System Operator (AESO)
in Support of the
AESO Needs Identification Document (NID)

August 31, 2011

Table of Contents

EXECUTIVE SUMMARY *3*

1 INTRODUCTION & OVERVIEW *5*

1.1 BACKGROUND 5

1.2 NORTHWEST FORT MCMURRAY TRANSMISSION DEVELOPMENT SYSTEM PLAN 5

1.3 SCOPE OF THE LIA 5

1.4 PROJECT COMPONENTS 5

1.4.1 Proposed NW-1 Substation *5*

1.4.2 Proposed NW-2 Substation and in/out on 9L57 ..... *5*

1.4.3 Proposed Single Circuit 240 kV Transmission Line *6*

1.4.4 Proposed Double Circuit 240 kV Transmission Line (in/out 9L08) *6*

1.5 PRELIMINARY STUDY AREA 6

2 LIA ASSESSMENT PROCESS *9*

2.1 METHODOLOGY 9

3 LAND IMPACTS & MEASURABLE INDICATORS *10*

3.1 AGRICULTURAL IMPACT 10

3.1.1 Specific Concerns *10*

3.1.2 Indicators of Agricultural Impact *12*

3.2 RESIDENTIAL IMPACT 12

3.2.1 Specific Concerns *12*

3.2.2 Indicators of Residential Impacts *14*

3.3 ENVIRONMENTAL IMPACTS 14

3.3.1 Specific Concerns *14*

3.4 COST 15

3.5 ELECTRICAL CONSIDERATIONS 15

3.5.1 Specific Considerations *15*

3.5.2 Electrical Indicators *16*

3.6 VISUAL IMPACTS 16

3.6.1 Specific Concerns *17*

3.6.2 Indicators of Visual Impact *17*

3.7 SPECIAL CONSTRAINTS 17

3.7.1 Specific Concerns *17*

3.7.2 Indicators of Special Constraints *18*

3.8 ASSESSMENT OF COMPONENTS 19

4 RESULTS AND CONCLUSIONS *21*

ACRONYMS *22*

GLOSSARY OF TERMS *23*

List of Figures

Page

Figure 1.1: Regional Map 8
Figure 1.2: Primary Study Map 9

EXECUTIVE SUMMARY

The Alberta Electric System Operator (AESO) has requested that ATCO Electric Ltd. (ATCO) provide a Land Impact Assessment (LIA) for the proposed Northwest Fort McMurray Transmission Development (NWFMTD) Project ("the Project"), located primarily within ATCO's service territory in Alberta. The LIA is to be used by the AESO in support of a Needs Identification Document (NID) for this transmission development project.

The Northwest Fort McMurray Transmission Development Project system plan consists of four components, as determined by the AESO:

1) Construct a new 240 kV substation by creating an in/out on line 9L08.
2) Build approximately 52 km of double circuit 240 kV transmission line to connect the first substation to line 9L08.
3) Construct a new 240 kV substation and transmission line by creating an in/out on line 9L57.
4) Build approximately 80 km of single circuit 240 kV transmission line to connect the two substations.

The assessment of NWFMTD was driven by the major aspects of the Alberta Utility Commission (AUC) Rule 007, Section 6, NID 12 (i.e., agricultural impact, residential impact, environmental impact, electrical considerations, visual impacts and special constraints). Associated with each major aspect are several specific considerations that require assessment in the LIA as per AUC Rule 007. The LIA focuses on those aspects and considerations for which indicators of impact can be developed based on information currently available and relevant to the Project.

After review of the available data, the application of suitable indicators and assessment of the Project and study area, it was determined that the potential for impacts exists. It should be noted that extensive stakeholder consultation must be undertaken by the Transmission Facility Owner (TFO) prior to the Facility Application to determine the extent of concerns and objections to preliminary routes, once they are defined.

The study area is located in the Green Zone and is forested. The following features were considered as part of the land impact assessment process:

- Wetlands – approximately 55% of the study area is wetland;
- Wildlife (caribou habitat) – approximately 65% of the study area is caribou habitat;
- Provincial and National Environmentally Significant Areas (ESAs) – approximately 35% of the study area contains ESAs;
- Wildland parks (Birch Mountains Wildland) – this park is located on the northwest portion of the study area;
- Historical resources (mainly along the Ells, Dover and MacKay Rivers);
- Oil and Gas development – high concentration of wellsites in parts of the study area;
- Mine sites – there are approximately eight mine sites within the study area;
- Airports (four located within the study area); and

- Other linear developments (sled trails, pipeline, transmission line, cut lines) are abundant.

During routing and siting, potential impacts to these features can be reduced through avoidance or mitigation.

An effects assessment of the Project components identified the following potential impacts:

- NW-1 and NW-2 substations – areas are relatively small and should be able to be sited to avoid significant impacts.
- The single circuit transmission line between the two new substations may include three major river crossings and has the potential to impact caribou habitat, wetlands, ESAs, historical resources, and oil and gas development. Finding a suitable route will require operating in an environment with these multiple constraints, but mitigation options are available to reduce impacts and therefore viable options should be available.
- The double circuit transmission lines between the two substations and their tap points on 9L08 and 9L57 have fewer constraints and viable routes with minimal impacts are likely available.

1 INTRODUCTION & OVERVIEW

1.1 Background

The Alberta Electric System Operator (AESO) has requested that ATCO Electric Ltd. (ATCO) provide a Land Impact Assessment (LIA) for the proposed Northwest Fort McMurray Transmission Development (NWFMTD) Project ("the Project"), located primarily within ATCO's service territory in Alberta. The LIA is to be used by the AESO in support of a Needs Identification Document (NID) for this transmission development project.

1.2 Northwest Fort McMurray Transmission Development System Plan

The Northwest Fort McMurray Transmission Development Project system plan consists of four components, as determined by the AESO:

1) Construct a new 240 kV substation by creating an in/out on line 9L08.
2) Build approximately 52 km of double circuit 240 kV transmission line to connect the first substation to line 9L08.
3) Construct a new 240 kV substation and transmission line by creating an in/out on line 9L57.
4) Build approximately 80 km of single circuit 240 kV transmission line to connect the two substations.

1.3 Scope of the LIA

The LIA focuses on the four components outlined above. The study area is located northwest of Fort McMurray and west of Fort MacKay. This area is the basis for the qualitative assessment of the potential impacts of the proposed project. Routing and siting details of specified routes will be contemplated and assessed during the Facilities Application Stage of the Project.

1.4 Project Components

The components considered in the LIA are the NW-1 substation, the NW-2 substation and the related 240 kV lines between the two substations and between the connection points on the existing transmission lines 9L08 and 9L57.

1.4.1 Proposed NW-1 Substation

To date, a final substation location has not been determined for the NW-1 facility. For this assessment the location has been assumed to be north of the Dover River and west of line 9L08/9L09, southwest of the existing Joslyn Substation (849S).

1.4.2 Proposed NW-2 Substation and in/out on 9L57

To date, a final substation location has not been determined for the NW-2 facility. For this assessment the location has been assumed south of the McKay River and southwest of the existing Dover Substation (888S). A double circuit 240 kV transmission line to tap into 9L57 will also be part of this component.

1.4.3 Proposed Single Circuit 240 kV Transmission Line

While the location of this transmission line has not been selected, 80 km of single circuit 240 kV transmission line will connect substations NW-1 and NW-2. It has also been indicated that this line will be a double circuit with one side strung. The right of way for a 240 kV transmission line is 50 m. The line will cross through a forested area.

1.4.4 Proposed Double Circuit 240 kV Transmission Line (in/out 9L08)

While the location of this line has not been selected, approximately 52 km of double circuit 240 kV transmission line will connect the NW-1 substation to a connection point on 9L08. The right of way for a 240 kV transmission line is 50 m. The line will cross through a forested area.

1.5 Preliminary Study Area

The study area was selected by using the information in the functional specification (File No. P1180, rev.0, April 28, 2011) with the information presented by the AESO in their "Need for Transmission System Development in the Area – northwest of the City of Fort McMurray – Information for Potentially Affected Stakeholders". The study area (Figure 1.2) was selected to be sufficiently broad so that multiple options for the project components would be represented with the selected area.

The NWFMTD study area is located northwest of Fort McMurray, within the Regional Municipality of Wood Buffalo. The Ells, Dover and MacKay Rivers are the major river systems within the study area. Many named and unnamed creeks occur within the region. Oil and gas exploration and development is very common throughout the region, as is related infrastructure (well sites, pipelines, pump stations and compressor stations, mine sites). Oilsand extraction facilities and other related industrial developments are proceeding into areas where there currently are no transmission systems. The demand for electricity in the selected study area, as shown on Figure 1.2, is forecasted by the AESO to be in the range of 250 MW to 450 MW by 2020.

The study area is located within the Wabasca Lowland ecoregion. This ecoregion encompasses the undulating lowlands of north-central Alberta and forms a portion of the continuous mid-boreal mixed forest extending from northwestern Ontario to the foothills of the Rocky Mountains. The ecoregion is classified as having a sub-humid mid-boreal ecoclimate. Medium to tall, closed stands of trembling aspen, balsam poplar, white and black spruce, and balsam fir that occur in late successional stages, are abundant. Cold and poorly drained fens and bogs are covered with tamarack and black spruce. The low-relief plain is rather poorly drained, and organic materials cover approximately 50% of the area. Organic soils are dominant in the region. Gleysolic and Gray Luvisolic soils are significant inclusions. The whole of the region slopes gently and drains northward via the Athabasca River.

One urban service area (Fort McMurray) and the hamlet of Fort MacKay provide services to the local community and also support oilfield activities. Airstrips are associated with various industrial developments as well as Fort McMurray. Telecommunications towers are distributed throughout the landscape. Land is primarily owned by the Crown (Provincial Government). There is a wildland park and an ESA of national significance at the very northern extent of the study area. ESAs of provincial significance cover approximately 35% of the study area. Refer to Figures 1.1 and 1.2 for Regional Map and Preliminary Study Area map, respectively.

Figure 1.1 – Regional Map

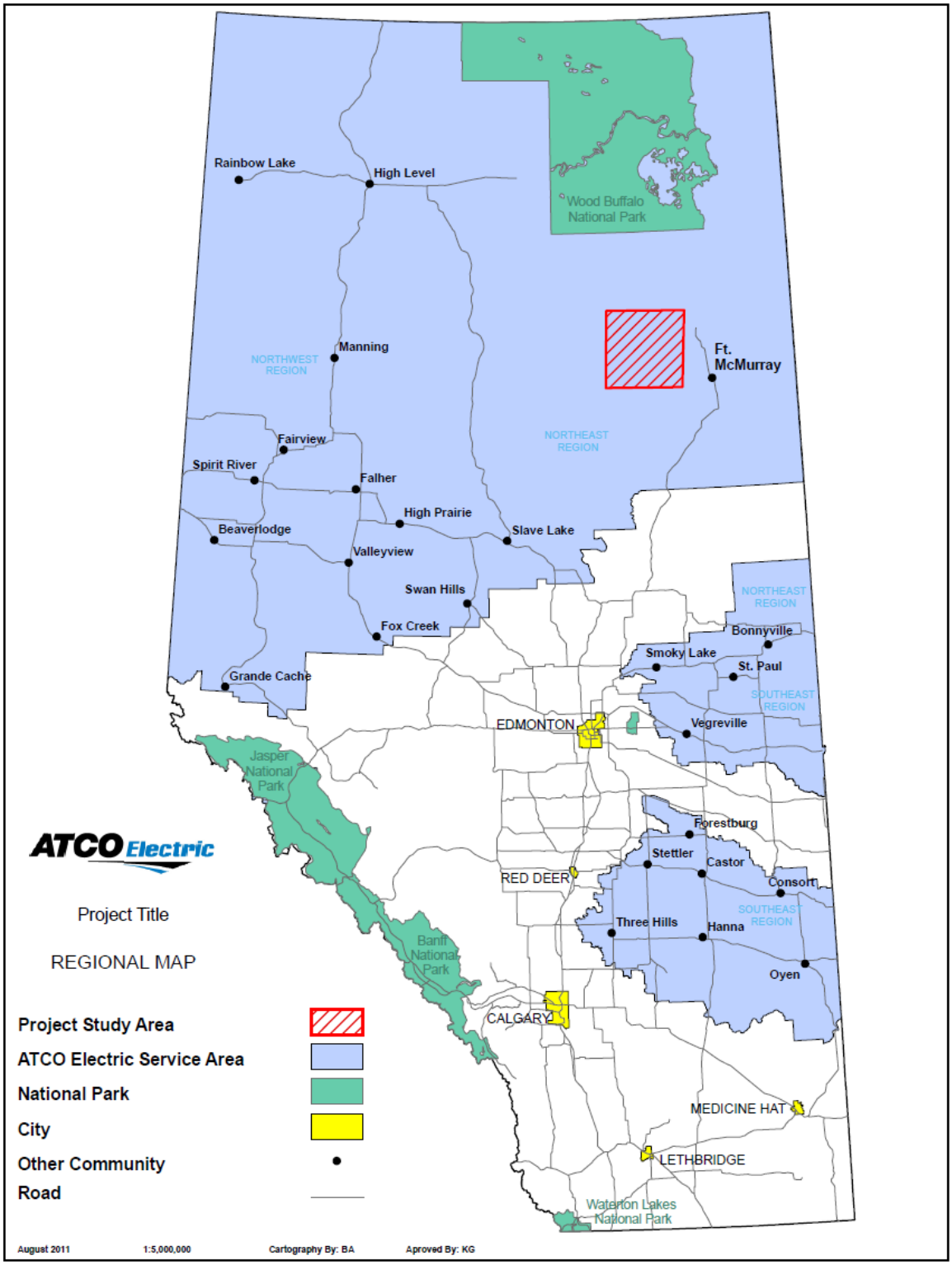

Figure 1.2 – Preliminary Study Area Map

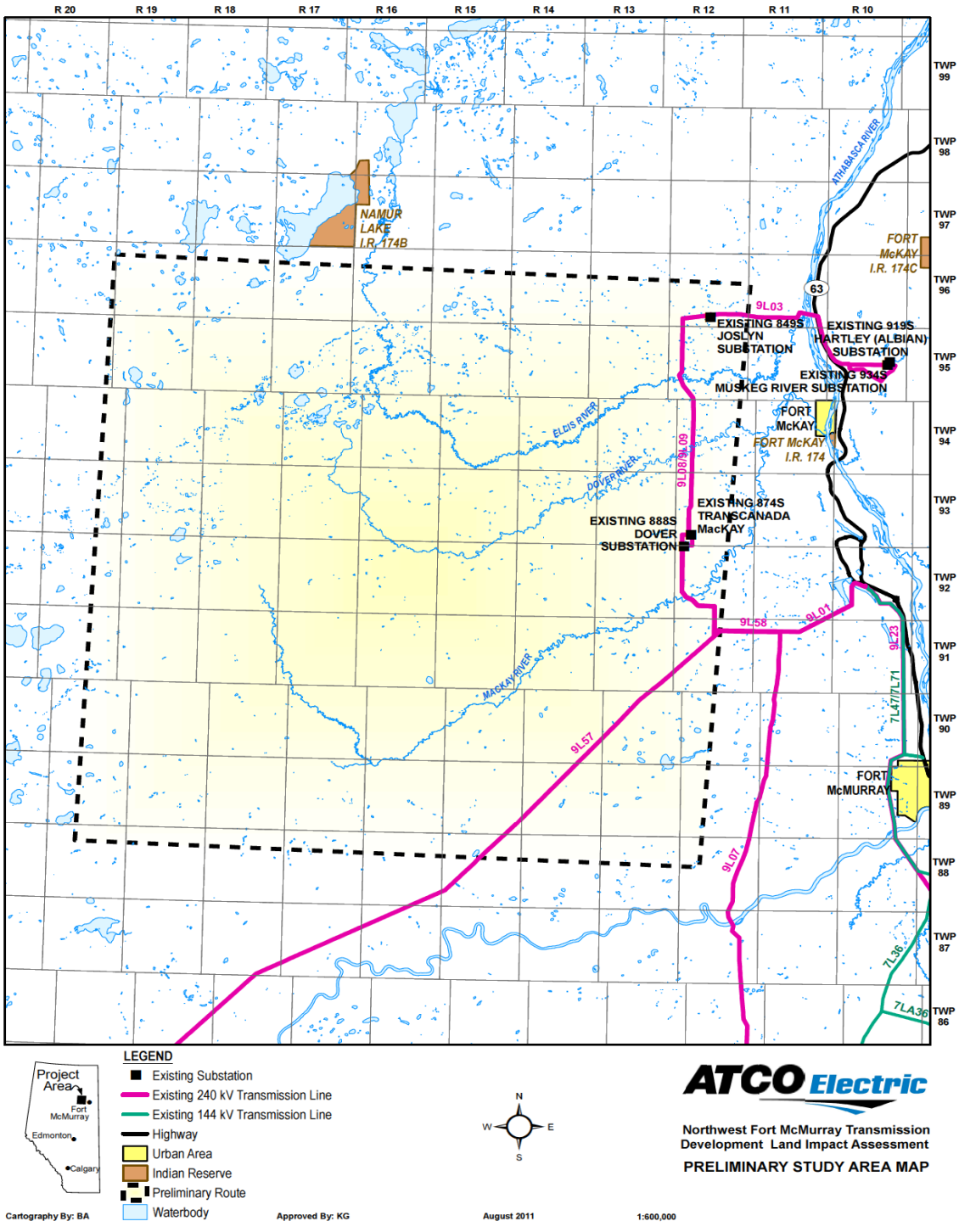

2 LIA ASSESSMENT PROCESS

2.1 Methodology

The Land Impact Assessment (LIA) process allows the AESO to consider the potential land impacts associated with the system plan components in their determination of need.

To ensure consistent data for all plans, the LIA process is driven by common criteria. The AUC Rule 007 "major aspects for land assessments", with associated measurable indicators and concerns are considered for all plans.

The LIA uses the "major aspects of land impact", with the exception of cost and certain electrical aspects, as identified within AUC Rule 007 (NID 12, Section 6.1) as the basis for identifying specific land-impact concerns. These include:

- Agricultural Impact;
- Residential Impact;
- Environmental Impact;
- Electrical Considerations;
- Visual Impact; and
- Special Constraints.

(Note that AUC's "Item 4 – Cost" was not part of the scope of this impact assessment)

However, considerations of major aspects in many cases (e.g. reduced efficiency of field operations, psychological impact, noise and TV interference, visual impact of tree removal) are not readily comparable until detailed route and tower locations and design have been undertaken by the TFO during the Facilities Application Stage. The LIA focuses on those aspects and considerations that can be described using information currently available.

3 LAND IMPACTS & MEASURABLE INDICATORS

The LIA uses the "major aspects", with the exception of cost and certain electrical factors, identified in the AUC Rule 007 (Section 6.1, NID12) as direction in identifying measurable indicators and specific concerns that can be used to determine levels of potential land-related impacts.

The major impact categories under Rule 007 are: Agricultural Impact, Residential Impact, Environmental Impact, Cost, Electrical Considerations, Visual Impact, and Special Constraints. Under each aspect in Rule 007 are a list of concerns that must be addressed. These concerns are discussed with regards to the NWFMTD Project in the following sections.

3.1 Agricultural Impact

Agricultural impacts refer to agricultural activities associated with rural lands, which may include cultivation of crops and livestock, and also includes ranching.

Agricultural impacts will not be significant factors in this project, as the study area is located in the "Green Area" [1] of the province. The "White Area" [1] of the province contains most of the land suitable for cultivation. The majority of land within the Green Area is undesirable from an agricultural perspective and, as such, Canada Land Inventory (CLI) capability ratings for Agriculture are not available for this area.

3.1.1 Specific Concerns

The TFO has considered the agricultural concerns outlined in AUC's Rule 007. These concerns are listed below with commentary provided on some mitigation strategies for the potential impacts identified for this project.

a. Loss of Crops – (This includes short-term loss caused by construction; longer-term losses possible from soil erosion, rutting, drainage, disturbance, and soil mixing, and permanent loss of crop area under or adjacent to the tower base)

Short-term crop loss during construction is kept to a minimum with appropriate mitigation and construction practices. Any such short-term losses are compensated through damage payments to landowners. Any permanent loss of crop under or adjacent to the tower base is mitigated through working with specific landowners during the Facility Application consultation, routing of the centerline relative to legal boundaries such as quarter-lines, and compensation by annual tower payments.

Potential impacts may be further reduced by landowner input on tower placement.

b. Short-term disruption of farming and livestock grazing resulting from construction

These potential impacts are mitigated through appropriate construction practices and working with specific landowners to minimize any disruption.

[1] The White Area and Green Area are defined in the *Public Lands Operational Handbook*, December 2004, published by Alberta Sustainable Resource Development.

c. Reduced efficiency of field operations

This potential impact is mitigated through strategic tower placement. Long-term impacts are considered when determining annual structure payments for towers.

d. Restrictions on use of aircraft

The presence of a transmission line potentially impacts agricultural aircraft use, such as crop spraying. This, however, is landowner specific, and aerial spraying is being used less often as high-wheel crop sprayers are becoming more common. Any unavoidable impacts are considered when determining compensation payments for mitigations or impacts.

e. Risk of collision with tower; damage to equipment, lost time, liability for damage to tower and secondary liabilities

A landowner is not held liable for tower damage unless it was deliberately caused by the landowner or his agents. If the transmission line is taken out of service by the damage, it is typically restored to service within 24 to 48 hours, so any disruption to farming activities due to repairs of the line and tower is short in duration. The potential of collision with a transmission tower is considered very low.

f. Reduction in yield adjacent to towers due to overlapping farming operations and added soil compaction

Permanent loss of crop under or adjacent to the tower base is mitigated through working with specific stakeholders during the Facility Application consultation. The total basal area under the towers may be considered relatively small (i.e., 10 m x 10 m) for overhead transmission lines. This is addressed and compensated for through annual tower payments. Potential impacts are further reduced by landowner input to tower placement. Quantifying the amount of cropland and forage lands can be used as an indicator of the potential level of impact with cropland being the most significant indicator.

g. Added cost and inconvenience of weed control under towers

The added cost and inconvenience of weed control is compensated as part of the annual structure payments to landowners.

h. Impact of height restrictions on equipment during field operations

All transmission lines in Alberta provide clearance for equipment 4.3 m high on agricultural lands. Any proposed power lines will be designed to meet or exceed any clearance requirements, including consideration of any unique clearance requirements identified by affected landowners.

i. Psychological impact of line

This is a subjective impact involving factors such as visual impact, electric and magnetic fields (EMF), land values, and other issues, all of which are incorporated in the LIA and will be addressed in the Facility Application. Provision of unbiased information around EMF research from national and international health and scientific agencies often helps address stakeholders' concerns.

j. Loss of shelter belts

Impacts to shelter belts can be mitigated through routing offsets relative to legal boundaries such as quarter-lines along which shelter belts may exist. In some cases only trimming may be required. Compensation for re-establishment of a shelter belt is also an option. All of these are site specific and

determined in consultation with the potentially affected landowner during the Consultation process prior to the Facility Application.

k. Shared use with other utilities and transmission lines

Utilization of existing linear disturbances is a factor in the final determination of routing during the Facility Application stage, as per the Alberta Environment's Transmission Planning Guidelines, and Alberta Transmission Regulations. Paralleling existing linear disturbances is often preferred by government agencies and local jurisdictional authorities (e.g., Counties or MD) in order to minimize fragmentation of the landscape.

l. Interference with citizen band radios

This is becoming less of an issue as Citizen Band (CB) radios are being replaced with newer technologies. However, CB radios operate at frequencies close to those of AM radios, neither of which are designed to be immune to power line interference. The interference produced by power lines diminishes with distance from the power lines, therefore interference is highly localized. All facilities will comply with federal guidelines related to radio interference.

Telecommunications towers must also be considered in the development of the system plans.

3.1.2 Indicators of Agricultural Impact

Agricultural land use is represented by cropland and forage. This project is in the Green zone and there is limited agricultural potential in the area.

3.2 Residential Impact

Minimizing residential impact is an important consideration in the routing of transmission lines. There are sources of information that can be used to provide an indication of the potential residential impacts associated with the proposed system-development plan. These can include Municipal District (MD) and County maps, along with aerial photo and satellite image interpretation.

Residential impact is a significant factor in routing for all transmission projects. This holds true for both rural and urban environments and residential properties. Some portions of the study area are highly settled when compared to other areas within the study area. This includes areas such as Fort McMurray and Fort MacKay.

3.2.1 Specific Concerns

ATCO has considered the specific residential concerns outlined in Rule 007 which are listed below with commentary provided on mitigation strategies and the identification of potential impacts for this project.

a. ***Decrease of property values***

This is a very site-specific impact. The determination of potential residences within 150 m and 800 m can be completed and applied to provide an indication of the potential number of residences that may be affected. This is not a concern at this stage as the NWFMTD project area is within the Green zone and primarily forested.

b. Loss of developable lands and constraints on development

Development tends to happen in proximity to existing developed (urban) areas, i.e., residential density is a measure of potential impact. Therefore, minimizing routing in areas of existing residential density may help avoid areas with the highest development potential. Loss of developable land is not a concern at this stage, as the NWFMTD project area is in a remote location in the Green zone.

c. Relocation or removal of residences

A preliminary determination of potential residences within 150 m can be used as a general indicator of the potential level of impact. However, at this preliminary stage of evaluation this is difficult to assess, and will not be determined until the Facility Application stage. Given the remote location of the project area, this is likely not a concern.

d. Psychological impact of the line

This is a subjective impact involving factors such as visual impact, EMF, land values and other issues, all of which are incorporated in the LIA and are addressed in the Facility Application. Provision of unbiased information around EMF research from national (e.g., Canadian Electricity Association) and international health and scientific agencies (e.g., World Health Organization) often helps address some stakeholders' concerns. Given that the project area is in a remote location this is not expected to be an issue.

e. Noise and TV interference

TV reception problems related to high-voltage transmission lines are unlikely. If interference does occur, it can often be resolved by relocating the TV or changing the antennae. The transmission lines are designed to meet allowable audible noise and TV interference. Where individual landowners are concerned, measurements will be taken before and after construction so that signal interference beyond allowable levels can be identified and mitigated. As these types of concerns tend to be associated with residences, the number of residences within 150 m can be used as an indicator of the potential level of impact.

f. Windbreak, Shelterbelts, and other vegetation removal

This is an issue where the removal or trimming of trees or other vegetation may be required when establishing a new ROW. It is also important to note that the overall impact is considered in making compensation payments for towers and land rights. This is site-specific and determined in consultation with the potentially affected landowner at the Facility Application stage.

g. Conflict with recreational use of land holdings

The proximity of known recreational areas, such as parks and natural areas, can be determined and can be used as a preliminary indicator of potential impacts. The Birch Mountains wildland park and multiple environmentally significant areas are within the study area. ESAs comprise approximately 35% of the study area.

h. Public versus Private Land

Landowners may view the use of public land as a preferable alternative to using private lands. Existing data sources can provide a general indication of the amount of public ("Crown") versus private land, providing an indicator of the potential level of impact. The majority of public land is located within the

Green Area of the province, while the majority of private lands are located within the White Area. This project is located in the Green Area where the predominant land use is oil and gas development.

Large areas of public land were identified in the study area.

3.2.2 Indicators of Residential Impacts

The Town of Fort McMurray and the Hamlet of Fort MacKay are located west of the study area and would be avoided in the routing siting of the transmission lines and substations. The study area is in a remote location and residential impacts are not expected to be a concern.

3.3 Environmental Impacts

Use of existing data sources consulted provided a generalized indication of the potential environmental issues and relative impacts that may occur along the system-development plan. These impacts will need to be assessed in greater detail as the Project moves forward, and as additional information becomes available.

The potential environmental impacts from transmission lines are a concern for a variety of stakeholders, and efforts to minimize such environmental impacts factor into the assessment of the potential routing and the technologies associated with transmission lines. Large scale land use, including the presence of environmentally significant areas within the study area, has also been considered during evaluation of the plan.

The system-development plan can be built almost anywhere within the study area and will have some level of environmental impact. The majority of identified potential environmental impacts can be mitigated using various planning, routing, and construction techniques to eliminate, mitigate, or lower the overall potential impact.

3.3.1 Specific Concerns

ATCO has considered the specific environmental concerns outlined in AUC Rule 007. These concerns are listed below with commentary provided on mitigation strategies and the identification of potential impacts for this project.

a. Increased public accessibility to wildlife areas

Typically, this is an issue for treed/forested areas where there is currently little access. One method of controlling access involves using locked gates. The proximity of known wetlands and large treed areas can be determined using existing data sources, and can provide a general indication of the potential for an increase in the level of public access. Approximately 55% of the study area is wetland and this will need to be considered in the routing and siting process.

The Forest Capability Class can also provide an indication of the general quality of the land in relation to forest growth. Forest Capability Classes 1-3 generally represent the larger, older forest types, while classes 4-7 would be smaller, younger or less productive areas from a forest growth perspective. This is applied in forested areas, known as the “Green Area”. The project area under consideration is located in the “Green Area.” The northeast portion of the study area is located within Class 3 and 4 forest, while the remainder of the study area is located within Class 5-7 forests.

b. Alteration of natural areas and interference with outdoor educational opportunities

The number of protected or designated areas can be determined using existing data sources. This can provide a general indication of the potential level of this impact.

c. Use of Restricted Development Area (TUC)

While the utilization of existing areas set aside for utility developments such as transmission lines is preferable, the closest Transmission Utility Corridors (TUCs) are located around the cities of Edmonton and Calgary. The location of the TUCs in relation to the NWFMTD plan removes TUC's from consideration as components for future routing.

d. Effect on Erosion

There is potential to affect erosion if areas near surface water or on slopes is disturbed. This will have to be considered further in the routing and siting stage as well as the Facilities Application Stage.

e. Unique Ecological Areas

There are three major rivers, Ells River, Dover River and MacKay River in the study area, as well as the boreal forest in which the Project is located. These will have to be considered further in the routing and siting stage as well as the Facilities Application Stage. Additionally the Birch Mountain Wildland Park is located in the northwest section of the study area. ESAs are also found through the study area, and are listed based on several criteria, including containing elements of conservation concern, containing rate or unique landforms, containing habitat for focal species and wildlife, and containing large natural areas and sites of recognized significance.3.3.2 Environmental Impact Indicators

Surface water bodies (stream, rivers), wetlands, ESAs, parks and forested areas are all found within the study area. While the river crossings may be avoided, where the transmission lines are located can be determined during the routing portion of the development. Impacts will need to be reduced or mitigated when considering any routing or siting for the Project.

3.4 Cost

The information and findings in this LIA do not consider the influence of cost and associated issues.

3.5 Electrical Considerations

Electrical considerations play an important role when assessing potential impacts associated with the proposed plans. While the technical considerations, such as transfer capability, system flexibility, system reliability and losses are considered by the AESO separately, some land impacts related to electrical considerations can be identified. Technical requirements and the other electrical considerations associated with the plan can affect the presence or level of impacts on the land.

3.5.1 Specific Considerations

ATCO has considered the specific electrical concerns outlined in AUC Rule 007. These concerns are listed below with commentary provided on mitigation strategies and the identification of potential impacts.

a. Ease of connections to future load areas

This relates to electrical capacity, location of the facilities and the type of technology used (overhead vs. underground). This specific concern does not have a direct land impact for purposes of this study and will be considered by the AESO separately.

b. Reliability and maintenance of the line

The reliability and maintenance of a line as it relates to the specific technology being considered does not have any impact from a land perspective. However, paralleling certain existing linear developments can provide better access, thus improving the ability to repair the line in a timely fashion. Paralleling certain linear developments can also potentially reduce impacts associated with the amount of adjacent trees, resulting in greater transmission line reliability as the potential for faults caused by falling trees is reduced.

Wet soil conditions can present difficulties for future maintenance; however, since they cover 55% of the study area, they will likely be difficult to avoid. Wet areas will be considered during the Facilities Application process.

c. Access for construction and maintenance of the line

Paralleling major roads or existing transmission lines can reduce some of the potential access concerns associated with access to new facilities, as these developments can provide existing access. There are few transmission lines in the area that will provide an opportunity to parallel; however, during the Facility Application other linear developments will be considered such as pipelines and cutlines.

3.5.2 Electrical Indicators

ROW lengths that parallel existing transmission lines or other linear developments are high-level indicators of electrical factors. The Length of the transmission line is a cost driver that can be used in line loss calculations by the AESO. Further consideration will be given at the Facilities Application Stage.

3.6 Visual Impacts

Visual impacts are generally considered a social impact dependent on individual stakeholder opinion. A general assumption is that underground transmission lines have a minimal impact when compared to overhead lines, but the issue of cost is often overlooked when making comparisons.

Visual impacts are closely related to residential impacts as they are typically influenced by similar factors – with aesthetics of transmission lines and tower structures being a common concern. However, visual and other impacts may be experienced by other stakeholder groups, such as recreational users (hikers, fishermen, hunters, etc.), recreational installations, and back-country access roads.

There are some general assumptions regarding visual impacts that are relevant to all overhead transmission lines:

- The closer the line is to a residence, the more likely a visual impact will be perceived.
- The higher the residential density, the more likely a visual impact will be perceived.
- Paralleling similar, existing transmission facilities has a lower visual impact than a new greenfield ROW where there is no existing line. Double-circuiting on tower structures helps to reduce impacts to land base and aesthetic considerations.

- Close proximity to parks, natural areas, and other recreational areas, can be viewed as creating a higher degree of visual impact than in other less frequented areas.
- Avoiding hilltops, ridges, and other topographic features, reduces the potential level for visual impact, particularly when these features serve as local vistas.

3.6.1 Specific Concerns

ATCO has considered the specific visual concerns outlined in AUC Rule 007. These concerns are listed below with commentary provided on mitigation strategies and the identification of potential impacts for this project.

a. Visual impact of tree removal as seen from roads and recreational installations

Many stakeholders view the removal of trees as a visual impact. The study area for this project involves the Green Area of the province. The Canada Land Inventory (Forest Capability) data provides an indication of where forested lands occur. The amount of forested area crossed by a particular alternative may be considered a potential indicator of visual impact.

b. Visual impact on dispersed recreational users such as hikers, fishermen, hunters, scenic viewers, and cross-country skiers

Areas commonly used by recreational users was attempted for this assessment. Consideration of Parks and Protected Areas in the study area will be conducted at the Facilities Application Stage.

c. Visual impact of towers and lines as seen from residences, farms, roads, and recreational installations

The number and type of residences and landowners can provide an indication of potential visual impact. The type of tower being proposed can also impact the potential level of visual impact. Since the study area is remote, this is not considered a concern.

3.6.2 Indicators of Visual Impact

Visual Impacts are closely related to residential development, the presence of existing transmission lines, and the presence of recreation areas in the study area.

The site is in a remote location and therefore, it is anticipated that the visual impact will be low. There are recreational areas within the study area and during the Facility Application process these will need to be considered.

3.7 Special Constraints

Special constraints are issues or factors that may impact potential routing options for the study area being assessed. Using existing sources of available data, there are several special constraints that have been identified for the study area.

3.7.1 Specific Concerns

The TFO has considered Historical resources as a special constraint that can be associated with AUC Rule 007 as a specific concern, as well as additional identified special constraints that relate to the Project study region.

a. Proximity to Historical Resources

Historical resources are specific sites (given an associated Historical Resource Value - HRV) which have been identified within the province and hold particular archaeological, or historical and cultural significance. Alberta Culture and Community Spirit (ACCS) maintain a registry of known locations and depending on the significance of a particular site, there may be constraints placed on nearby planned developments or disturbances.

b. Oil and Gas

Oil and gas is a major land use in this area of the province. Mineral leases are present within the Project area, and pipelines are therefore common features on the landscape. Conflicts with oil and gas facilities on transmission ROWs can be mitigated by avoidance. Well sites are common throughout the Project area.

c. Mine Sites

Mine sites have been identified within the study area. Conflicts with mine sites on substation siting and transmission ROWs can be mitigated by avoidance And/or consultation with the potentially affected stakeholder.

d. Proximity to Major and Minor Airports

The presences of airports, airstrips and aerodromes present a challenge for routing since each have a specific setback. The conflicts range from collision hazards to radio and navigational equipment interference. Based on the available information, there are four airstrips within the study area, located primarily at the outer extent of the study area.

e. Proximity to Indian Reserves and Metis Settlements

This involves determination of the proximity or likelihood of crossing through Indian Reserves. The TFO has considered this factor in this LIA. There is one reserve located north of the study area (Namur Lake 174B).

f. Proximity to Military Bases and Military Lands

This involves determination of the proximity or likelihood of crossing through Military Bases in the Project area. The TFO has considered this factor in this LIA; however, there were no databases or other information on military lands available at the time of the LIA. This will be considered further at the Facilities Application Stage.

g. Proximity to Cemeteries

This involves determination of the proximity or likelihood of crossing through cemeteries in the Project area. The TFO has considered this factor; however, there were no databases or information sources available at the time of the LIA. This will be considered further at the Facilities Application Stage.

3.7.2 Indicators of Special Constraints

With the information available during the LIA process, historical resources, oil and gas, mine sites, and airports have all been identified within the study area. These constraints may not be avoidable; however, impacts will need to be reduced or mitigated when considering any routing or siting for the Project at the Facilities Application Stage.

3.8 Assessment of Components

This section assesses the Northwest Fort McMurray Transmission Development system components according to indicators derived from the major land impact aspects of AUC Rule 007. A discussion of the major aspects and the selected indicators is presented in sections 3.1 to 3.7. Those representative indicators are used below to characterize the potential impacts of each component of the system plan.

a. Proposed NW-1 Substation

To date, a final substation location has not been determined for the NW-1 facility. For this assessment a location has been assumed north of the Dover River and approximately 52 km west of line 9L08, southwest of the existing Joslyn Substation (849S).

This substation location is remote and there are likely suitable areas for siting which are not located in wetland or caribou areas. A location is also likely available which does not impact ESAs or known historical resources and would be near existing linear development.

b. Proposed NW-2 Substation and in/out on 9L57

To date, a final substation location has not been determined for the NW-2 facility. For this assessment a location has been assumed south of the McKay River and southwest of the existing Dover Substation (888S). A double circuit 240 kV transmission line to tap into 9L57 will also be part of this component.

This location is approximately 80 km south of the NW-1 location. Similarly, it is a remote location and wetlands are abundant. It is located within caribou habitat and ESAs; however, there is an opportunity to site this substation outside of the ESAs. There are minimal linear developments in the area and there are no listed historical resources in the area.

The double circuit transmission line related to the NW-2 Substation in/out is impacted by the similar items listed for the substation, and will also need to consider mine sites and related infrastructure in the area.

c. Proposed Single Circuit 240 kV Transmission Line

While the location of this line has not been selected, the 240 kV transmission line will be approximately 80 km of single circuit transmission line that will connect substations NW-1 and NW-2. It has also been indicated that this line will be a double circuit with one side strung. The right of way for a 240 kV transmission line is 50 m. The line will cross through a forested area.

This transmission line has the potential to cross areas that are predominantly wetland, however there are non-wetland areas present in this area. There are varying classes of forest as well, Class 3 in the north and Class 4-7 in the south. A majority of the line would likely cross through caribou habitat, ESAs and potentially areas of known historic resources. This line has the potential to cross all three major rivers and routing will have to consider the location of two in situ mines and related infrastructure.

d. Proposed Double Circuit 240 kV Transmission Line (in/out 9L08)

While the location of this line has not been selected, this 240 kV transmission line will be approximately 52 km double circuit line from NW-1 to line 9L08 that will create and in/out on line 9L08. The right of way for a 240 kV transmission line is 50 m. The line will cross through a forested area.

This line has the potential to cross the Ells or Dover River. The area for this substation and transmission line contains fewer wetlands and a less caribou area coverage than the rest of the study area. There are

ESAs and historical resources present in this location. Wellsites are particularly dense in the surrounding two mine areas near the Dover and Joslyn substations.

4 RESULTS AND CONCLUSIONS

After review of the available data, the application of suitable indicators and assessment of the Project and study area, it was determined that the potential for project impacts exist. It should be noted that extensive stakeholder consultation must be undertaken by the TFO prior to the Facility Application to determine the extent of concerns and objections to preliminary routes, once they are defined.

The study area is located in the Green Zone and is forested. The following features were considered as part of the land impact assessment process:

- Wetlands – approximately 55% of the study area is wetland;
- Wildlife (caribou habitat) – approximately 65% of the study area is caribou habitat;
- Provincial and National ESAs – approximately 35% of the study area contains ESAs;
- Wildland parks (Birch Mountains Wildland) – this park is located on the northwest portion of the study area;
- Historical resources (mainly along the Ells, Dover and MacKay Rivers);
- Oil and Gas development – high concentration of wellsites in parts of the study area;
- Mine sites – there are approximately eight mine sites within the study area;
- Airports (four located within the study area); and
- Other linear developments (sled trails, pipeline, transmission line, cut lines) are abundant.

During routing and siting, potential impacts to these features can be reduced through avoidance or mitigation.

An effects assessment of the Project components identified the following potential impacts:

- NW-1 and NW-2 substations – areas are relatively small and should be able to be sited to avoid significant impacts.
- The single circuit transmission line between the two new substations may include three major river crossings and has the potential to impact caribou habitat, wetlands, Environmentally Significant Areas (ESAs), historical resources, and oil and gas development. Finding a suitable route will require operating in an environment with these multiple constraints, but mitigation options are available to reduce impacts and therefore viable options should be available.
- The double circuit transmission lines between the two substations and their tap points on 9L08 and 9L57 have fewer constraints and viable routes with minimal impacts are likely available.

ACRONYMS

AESO	Alberta Electric System Operator
AltaLink	AltaLink Management Ltd.
ACCS	Alberta Culture and Community Spirit
ASRD	Alberta Sustainable Resource Development
ATCO	ATCO Electric Ltd.
AUC	Alberta Utilities Commission
CLI	Canada Land Inventory (Land Capability for Agriculture, Forestry, Wildlife or Recreation)
DC (D/C)	Double Circuit
DFO	Distribution Facility Owner
DND	Department of National Defense
EIA	Environmental Impact Assessment
ESA	Environmentally Significant Area
EU Act	Electrical Utilities Act
ha	Hectare
HEE Act	Hydro and Electrical Energy Act
HRV	Historical Resource Value
HVDC	High Voltage Double Circuit
km	Kilometre
kV	Kilovolt
LIA	Land Impact Assessment
m	Metre
MER	Meridian, as per Alberta Township Survey
NID	Need Identification Document
QTR SEC	Quarter section, per Alberta Township Survey
RGE	Range, per Alberta Township Survey
R/W	Right-of-Way
ROW	Right-of-Way
SARA	Species at Risk Act
SC (S/C)	Single Circuit
SEC	Section, per Alberta Township Survey
TFO	Transmission Facility Owner
TWP	Township, per Alberta Township Survey

GLOSSARY OF TERMS

Aspect	The seven major aspects that the AESO must have regard for in determining technical options. These include: Costing, Agricultural Impact, Residential Impact, Environmental Impact, Visual Impact, Electrical Considerations, and Special Constraints. Consult AUC Rule 007 (Section 6.1 NID12, for further details.)
AUC Rule 007, or Rule 007	Alberta Utilities Commission Rule 007 (formerly EUB Directive 028): Rules respecting applications for power plants, transmission lines and industrial system designations April 21, 2009.
Facility Application	The Facility Application is developed and submitted by the TFO to the AUC once final route and site selections have been made. These final selections are based on the direction provided by the AESO. It also involves an extensive public consultation program, detailed field surveys, and other related activities in the route selection process.
Green Area (of Alberta)	Geographically, the "green area" represents about 69% of the province's land area of forested lands located in northern Alberta, and in the mountains and foothills. Nearly all these lands are publicly (provincially) owned. Main land uses are timber productions, oil and gas development, tourism and recreation, conservation of natural spaces, watershed protection, and fish and wildlife habitat.
Need Identification Document (NID)	The need identification document is developed and submitted by the AESO to the AUC once a technical solution has been recommended.
Right-of-Way	(ROW, R/W) The right-of-way refers to the width of a segment of land required to build a proposed transmission line. The width considers several factors to ensure safe and reliable operation of the line, which includes adequate clearance distances, access for maintenance, and other factors.
Study Area	The study area refers to the general area in which the proposed developments could be located. This is the land area that is considered for potential routing scenarios and the subsequent land impact assessment.
White Area (of Alberta)	Geographically, the "white area" covers about 39% of Alberta, and is comprised of land owned by individuals and groups. Main land uses are settlements, agriculture, tourism and recreation, oil and gas development and conservation of natural spaces and wildlife habitat.